POLICE RADAR INSTRUCTOR

TRAINING COURSE

police radar

U.S. Department of Transportation
National Highway Traffic Safety Administration

Developed in Cooperation with the International Association of Directors of Law Enforcement Standards and Training

Fred Toler, Director
Texas Commission on Law Enforcement Officers
Standards and Education

Robert Benac
New York Bureau for Municipal Police

John Herritage, Deputy Commissioner
New York Division of Criminal Justice Services

Captain John T. O'Neil
New York State Police

Superintendent Thomas Constantine
New York State Police

Dr. George Lieberman
Law Enforcement Standards Laboratory
National Institute of Standards and Technology

Brian Traynor
Police Traffic Services
National Highway Traffic Safety Administration

North Carolina Training and Standards Division, Department of Justice, for their contribution of the Instructional Methodologies Chapter of this Course.

The National Highway Traffic Safety Administration also wishes to express its appreciation to the men and women of the law enforcement and highway safety communities of Montana, New Hampshire, and Massachusetts who contributed to the content of this curriculum during the pilot testing.

C l

BACKGROUND AND OVERVIEW

C l

BACKGROUND AND OVERVIEW

CHAPTER 1
BACKGROUND AND OVERVIEW

BACKGROUND

Historically, a principal role of law enforcement has been the "protection of lives and property." Too often the perception of the meaning of this role has been limited to the prevention of crime and the apprehension of criminals. The facts that almost twice as many persons are killed annually in motor vehicle crashes as are murdered and the property loss to society is more than 5 times ($137 billion) that due to crime are often overlooked. This oversight is understandable to some extent. The general public fears being the victim of a crime because a criminal act is intentional. They fear motor vehicle crashes less because these are accidents, "anything that happens unexpectedly, without design, or by chance." Also, accidents almost always happen to someone else. The truth is that almost 90 percent of all motor vehicle crashes are due to driver error. Invariably, the driver error is a violation of **the** traffic laws. **(Overhead 1)**

Speeding or driving at speeds faster than appropriate for conditions is a contributing factor in 34 percent of fatal crashes in this country (Bowie, Waltz). Speed is also an over represented factor in property damage and injury crashes.

A goal of law enforcement as it relates to traffic laws and ordinances is to obtain **voluntary compliance** with the statutes by the motoring public. The body of experience that has been developed in traffic enforcement indicates that compliance with speed limits is obtained through a mix of three ingredients:

(1) ENGINEERING: The established speed limits are reasonable based on roadway design, traffic [vehicular and pedestrian] conditions and special conditions [school zones, etc];

(2) EDUCATION: The public understands why and how speed limits are set, the potential danger to their lives and property posed by disregard for these regulations, and that law enforcement will take enforcement action against those motorist who violate these laws; and,

(3) ENFORCEMENT: The police will take reasonable enforcement action against those who violate these laws, particularly at those locations, times, and days of the week of greatest risk of resulting in a crash.

Another goal is to assure that enforcement action taken for speeding violations is based on sound evidence. It is estimated that 20 million speeding citations are issued annually and that radar is used in 13 million of these cases. Law enforcement, therefore, has an obligation

CHAPTER 1
BACKGROUND AND OVERVIEW

BACKGROUND

Historically, a principal role of law enforcement has been the "protection of lives and property." Too often the perception of the meaning of this role has been limited to the prevention of crime and the apprehension of criminals. The facts that almost twice as many persons are killed annually in motor vehicle crashes as are murdered and the property loss to society is more than 5 times ($137 billion) that due to crime are often overlooked. This oversight is understandable to some extent. The general public fears being the victim of a crime because a criminal act is intentional. They fear motor vehicle crashes less because these are accidents, "anything that happens unexpectedly, without design, or by chance." Also, accidents almost always happen to someone else. The truth is that almost 90 percent of all motor vehicle crashes are due to driver error. Invariably, the driver error is a violation of **the** traffic laws. **(Overhead 1)**

Speeding or driving at speeds faster than appropriate for conditions is a contributing factor in 34 percent of fatal crashes in this country (Bowie, Waltz). Speed is also an over represented factor in property damage and injury crashes.

A goal of law enforcement as it relates to traffic laws and ordinances is to obtain **voluntary compliance** with the statutes by the motoring public. The body of experience that has been developed in traffic enforcement indicates that compliance with speed limits is obtained through a mix of three ingredients:

(1) ENGINEERING: The established speed limits are reasonable based on roadway design, traffic [vehicular and pedestrian] conditions and special conditions [school zones, etc];

(2) EDUCATION: The public understands why and how speed limits are set, the potential danger to their lives and property posed by disregard for these regulations, and that law enforcement will take enforcement action against those motorist who violate these laws; and,

(3) ENFORCEMENT: The police will take reasonable enforcement action against those who violate these laws, particularly at those locations, times, and days of the week of greatest risk of resulting in a crash.

Another goal is to assure that enforcement action taken for speeding violations is based on sound evidence. It is estimated that 20 million speeding citations are issued annually and that radar is used in 13 million of these cases. Law enforcement, therefore, has an obligation

may have a variety of instructional experience. This may take the form of formal schooling, such as a degree in education, or significant experience in training other subject areas. Neither is a guarantee that the person will develop into a quality instructor for a technical skill such as radar operation.

It is recommended that persons selected to be instructor-trainees possess at least one year of operator experience. This should be complemented by at least equal experience in court testimony in radar based speed enforcement actions. State or local certification as a Radar Operator Instructor is highly desirable, as is periodic Instructor recertification.

Skill levels for incoming trainees may be assessed by using a variety of diagnostic tools, one of which may be a pretest. Pretests should be designed to verify not only skill levels in the operational sense, but should give an indication of the person's potential as an instructor. Provided you are using a reasonably valid assessment tool, persons who fail to successfully complete the pretest should be encouraged to improve their skills and re-apply at a later time.

The nature of radar operation dictates that the Instructor/Trainee receive training in both the classroom and the field.

The purpose of classroom instruction is to provide an environment in which the trainee and instructor have adequate opportunity to interact and exchange information. It should allow the opportunity for the student to ask questions and for the instructor to clarify points important to the mastery of the material being presented.

In certain cases, lecture format instruction is necessary to present the most information in the least amount of time. It should be noted, that most adult learning theory educators acknowledge that adult learners prefer and accomplish higher levels of learning when self-paced hands-on instructional methods are employed. Therefore, instructors should not over-emphasize the use of the lecture format in the instructor training program at the expense of trainee participation.

In general, the classroom portion of the Radar Instructor program can be presented to any reasonable size group, giving due consideration for classroom size, materials, and administrative resources. Care should be taken to prevent over filling the classroom. This could result in the instructor merely reciting to a room of people rather than imparting knowledge through interaction.

The instructor-to-trainee ratio for field exercises is of extreme importance. It is imperative that trainees have maximum (learning) exposure to the process of evaluating others in the field. However, it would be cost prohibitive to provide and adequate number of fully qualified instructors to conduct field instruction. As an alternative to instructors, it is

may have a variety of instructional experience. This may take the form of formal schooling, such as a degree in education, or significant experience in training other subject areas. Neither is a guarantee that the person will develop into a quality instructor for a technical skill such as radar operation.

It is recommended that persons selected to be instructor-trainees possess at least one year of operator experience. This should be complemented by at least equal experience in court testimony in radar based speed enforcement actions. State or local certification as a Radar Operator Instructor is highly desirable, as is periodic Instructor recertification.

Skill levels for incoming trainees may be assessed by using a variety of diagnostic tools, one of which may be a pretest. Pretests should be designed to verify not only skill levels in the operational sense, but should give an indication of the person's potential as an instructor. Provided you are using a reasonably valid assessment tool, persons who fail to successfully complete the pretest should be encouraged to improve their skills and re-apply at a later time.

The nature of radar operation dictates that the Instructor/Trainee receive training in both the classroom and the field.

The purpose of classroom instruction is to provide an environment in which the trainee and instructor have adequate opportunity to interact and exchange information. It should allow the opportunity for the student to ask questions and for the instructor to clarify points important to the mastery of the material being presented.

In certain cases, lecture format instruction is necessary to present the most information in the least amount of time. It should be noted, that most adult learning theory educators acknowledge that adult learners prefer and accomplish higher levels of learning when self-paced hands-on instructional methods are employed. Therefore, instructors should not over-emphasize the use of the lecture format in the instructor training program at the expense of trainee participation.

In general, the classroom portion of the Radar Instructor program can be presented to any reasonable size group, giving due consideration for classroom size, materials, and administrative resources. Care should be taken to prevent over filling the classroom. This could result in the instructor merely reciting to a room of people rather than imparting knowledge through interaction.

The instructor-to-trainee ratio for field exercises is of extreme importance. It is imperative that trainees have maximum (learning) exposure to the process of evaluating others in the field. However, it would be cost prohibitive to provide and adequate number of fully qualified instructors to conduct field instruction. As an alternative to instructors, it is

may have a variety of instructional experience. This may take the form of formal schooling, such as a degree in education, or significant experience in training other subject areas. Neither is a guarantee that the person will develop into a quality instructor for a technical skill such as radar operation.

It is recommended that persons selected to be instructor-trainees possess at least one year of operator experience. This should be complemented by at least equal experience in court testimony in radar based speed enforcement actions. State or local certification as a Radar Operator Instructor is highly desirable, as is periodic Instructor recertification.

Skill levels for incoming trainees may be assessed by using a variety of diagnostic tools, one of which may be a pretest. Pretests should be designed to verify not only skill levels in the operational sense, but should give an indication of the person's potential as an instructor. Provided you are using a reasonably valid assessment tool, persons who fail to successfully complete the pretest should be encouraged to improve their skills and re-apply at a later time.

The nature of radar operation dictates that the Instructor/Trainee receive training in both the classroom and the field.

The purpose of classroom instruction is to provide an environment in which the trainee and instructor have adequate opportunity to interact and exchange information. It should allow the opportunity for the student to ask questions and for the instructor to clarify points important to the mastery of the material being presented.

In certain cases, lecture format instruction is necessary to present the most information in the least amount of time. It should be noted, that most adult learning theory educators acknowledge that adult learners prefer and accomplish higher levels of learning when self-paced hands-on instructional methods are employed. Therefore, instructors should not over-emphasize the use of the lecture format in the instructor training program at the expense of trainee participation.

In general, the classroom portion of the Radar Instructor program can be presented to any reasonable size group, giving due consideration for classroom size, materials, and administrative resources. Care should be taken to prevent over filling the classroom. This could result in the instructor merely reciting to a room of people rather than imparting knowledge through interaction.

The instructor-to-trainee ratio for field exercises is of extreme importance. It is imperative that trainees have maximum (learning) exposure to the process of evaluating others in the field. However, it would be cost prohibitive to provide and adequate number of fully qualified instructors to conduct field instruction. As an alternative to instructors, it is

CHAPTER 2
COURSE ADMINISTRATION

COURSE ADMINISTRATION

The Course Administrator plays a role vital to the success on any training program. The best instructor, using the best material, cannot be fully effective in an unsuitable learning environment.

The responsibility for Course Administration will vary depending on the size of the training staff. Whether the training staff is sufficiently large to have a designated Course Administrator or that role is routinely performed by the principal instructor should not affect the thoroughness with which the task is conducted.

The training administrator is responsible for all planning activities, establishing prerequisites for admission to the class, recruiting and screening students, selecting instructors for each unit, and ensuring instructors are thoroughly aware of their specific teaching responsibilities. With the instructors, the administrator adapts the course and its constituent materials to the specific agency's training needs and goals. The course presented in this manual serves as a generic guideline for radar instructor training. As such, it may not meet all of the training requirements of every traffic law enforcement agency. The adaptation process includes selection of the units (and topics within units) that should be conducted, as well as modification of the content and structure of the course. More specific comments and suggestions for adapting the course are discussed later in this Manual.

The training administrator has the ultimate responsibility for the overall quality of the course, and also must maintain course records and evaluate the training with a view toward improving future applications. At the same time, the training administrator must ensure that the course meets the training needs of the law enforcement agency or agencies represented and is conducted within an established budget.

To carry out these responsibilities, the training administrator needs to determine:

- The general course structure and associated instructional strategies;
- The qualifications needed by the instructor and the tasks the instructor must perform;
- The criteria for selecting and adapting course units and topics within units;
- Each agency's expectations for the planning, management, and evaluation of the course;
- The training time required to accomplish each objective;

CHAPTER 2
COURSE ADMINISTRATION

COURSE ADMINISTRATION

The Course Administrator plays a role vital to the success on any training program. The best instructor, using the best material, cannot be fully effective in an unsuitable learning environment.

The responsibility for Course Administration will vary depending on the size of the training staff. Whether the training staff is sufficiently large to have a designated Course Administrator or that role is routinely performed by the principal instructor should not affect the thoroughness with which the task is conducted.

The training administrator is responsible for all planning activities, establishing prerequisites for admission to the class, recruiting and screening students, selecting instructors for each unit, and ensuring instructors are thoroughly aware of their specific teaching responsibilities. With the instructors, the administrator adapts the course and its constituent materials to the specific agency's training needs and goals. The course presented in this manual serves as a generic guideline for radar instructor training. As such, it may not meet all of the training requirements of every traffic law enforcement agency. The adaptation process includes selection of the units (and topics within units) that should be conducted, as well as modification of the content and structure of the course. More specific comments and suggestions for adapting the course are discussed later in this Manual.

The training administrator has the ultimate responsibility for the overall quality of the course, and also must maintain course records and evaluate the training with a view toward improving future applications. At the same time, the training administrator must ensure that the course meets the training needs of the law enforcement agency or agencies represented and is conducted within an established budget.

To carry out these responsibilities, the training administrator needs to determine:

- The general course structure and associated instructional strategies;
- The qualifications needed by the instructor and the tasks the instructor must perform;
- The criteria for selecting and adapting course units and topics within units;
- Each agency's expectations for the planning, management, and evaluation of the course;
- The training time required to accomplish each objective;

The enforcement of speed laws and regulations demands the ability to measure speed. It is quite possible to determine through "naked-eye" observation that a vehicle is speeding. An officer can look at a car, note that it is passing or closing upon other traffic, listen to the sound of its passage, and determine with a high degree of confidence whether the vehicle is exceeding the speed limit. However, the officer usually needs more than this subjective approach for an enforcement action to stand up in court. One must not only know that the car is speeding but also how much it is speeding.

There are many ways to measure vehicular speed. For example, the distance traveled can be divided by the measured time, using a stopwatch. An officer can also follow a suspected speeder and match the patrol car's speed to that of the suspect's vehicle. Still another alternative is to employ RADAR.

RADAR speed measurement is accurate, cost-effective, and judicially accepted. While it has been a feature of traffic law enforcement for over four decades, the available technology has recently undergone substantial advancement. Until just a few years ago the typical RADAR device was a bulky, stationary, and often cantankerous contraption that was costly to purchase and maintain and relatively limited in its usefulness. Today's RADAR units are rugged and reliable and easily portable; more recent models can be used on moving patrol and in a variety of modes. Their costs, too, have become more attractive. It is now economically feasible for most law enforcement agencies to equip a substantial proportion of their patrol force with modern RADAR units.

While patrol officers must know how to operate RADAR devices, that knowledge alone is insufficient. They also must know when to use them, how to acquire other evidence supporting the citation, and how to present the evidence in court. Equally important, they must have the proper attitude toward speed enforcement-they must be motivated to use their enforcement tools as effectively as possible.

Training Objectives - The overall goal of this course is to improve the effectiveness of speed enforcement through developing a cadre of instructors who are able to teach the proper and efficient use of police traffic RADAR speed measurement instruments.

Specific training objectives are needed to satisfy the course goal as well as to guide the trainees in their studies. These require that each trainee be able to:

- demonstrate the association between excessive speed and crashes, injuries, and deaths, as well as the highway safety benefits of effective speed control on the local, State and/or national level;
- describe in detail the principles of RADAR speed measurement;
- demonstrate skill in teaching the method of testing and operating the specific RADAR instrument(s);

a

- identify and explain in detail the components and functions of RADAR;
- identify and describe the laws, court rulings, regulations, policies, and procedures affecting RADAR speed measurement and speed enforcement in general;
- demonstrate the ability to prepare and present records and courtroom testimony relating to RADAR speed measurement and speed enforcement.

It is the Training Administrator's responsibility to ensure that all Instructor/trainees achieve all objectives. In doing so, the administrator must work with the instructor(s) to decide how the training material should be tailored to enable each group of students to achieve the course objectives.

Course Planning Considerations - The course will not instill in trainees the desired knowledge, attitudes, and skills unless it is properly planned. Most of the basic course development work has been done; lesson plans, trainee study materials, and instructional aids are ready for use. But development is only the first step in planning. Each time the course is to be conducted, someone has to ensure that the study materials have been tailored to reflect the particular background, goals, and objectives of the class; a mutually convenient schedule of lessons has been worked out; the class size is appropriate and students are qualified to attend; the right instructors are available and properly prepared; suitable training facilities, instructional equipment and support staff are available; and necessary funds are in place. While some of these tasks may be delegated to instructors or subordinates, the administrator must take final responsibility for course planning.

This section presents major course planning issues and suggestions for resolving them. While the suggestions cannot possibly reflect all possible circumstances, they are expected to provide good general guidance. Follow them whenever they prove helpful and modify them whenever necessary. Above all, remember that planning is needed every time the course is held: Every trainee, whether the first, the tenth, or the ten-thousandth to take the course, deserves the best possible learning experience.

Selecting and Adapting Course Content - This course assumes that all stated objectives are of equal importance. Furthermore, each of the content topics is directly related to one or more of the objectives. Therefore, no unit or portion of a unit should ever be arbitrarily deleted, condensed, or diminished for the sake of convenience (i.e., reducing training time). Topics may be condensed or deleted only when it is clear that the trainees are already well versed in the subject matter. Determining whether a topic might be superfluous places the burden of proof on those who argue for deleting or diminishing it. Proof can be established through the pretesting recommended earlier. The pretest measures trainee knowledge, and thus serves as a useful tool to determine whether coverage of a particular topic is needed.

Adding more material is another matter. This course provides what **NHTSA** recognizes to be the minimum level of knowledge necessary to competently instruct the operation of RADAR. This position is ***also*** supported by the ***International Association of Chiefs of Police*** and **the *International Association of Directors of Law Enforcement Standards and Training*.** Additional materials may be inserted whenever the need arises.

Regardless of whether content topics are expanded or contracted, instructors should provide supplementary local information for certain units. For example, current local statistics relating speed enforcement to highway safety should be incorporated so that the course applies to the area jurisdictions. Local statutory definitions of various types of speed offenses should be presented as well.

Similarly, the case law, policies, and procedures developed by the local courts and police forces must be added. These modifications will call for changes in the course as well as preparation of handouts and other instructional aids. Typically, the instructor will prepare these materials under the guidance of the training administrator.

Course Schedule - A Course schedule should be developed that is consistent with the mode of delivery, i.e, consecutive days or in blocks of instruction.

Scheduling Lessons - The classroom portion of this course is designed to be presented over not less than 40 hours.

Class Size - Classes must be kept small enough to allow the instructor and each Instructor/trainee to interact and to ensure that the training objectives are being met. This is especially important because each instructor/trainee must have enough supervised hands-on practice to become proficient with the RADAR instrument(s).

Instructor Considerations - The most important aspect of the Training Administrator's planning tasks is the selection of highly qualified instructors. It is the Training Administrator's responsibility to ensure that the instructors are adequately prepared for the assignment. Generally, all instructors must have:

- An in-depth knowledge of State and local laws, court rulings, regulations, policies, and procedures affecting speed enforcement and RADAR speed measurement;
- an exceptional knowledge of the principles of RADAR, including its physical limitations and constraints;
- a clear understanding of the highway safety implications of speed offenses and enthusiasm for safety through rigorous enforcement; and

Adding more material is another matter. This course provides what **NHTSA** recognizes to be the minimum level of knowledge necessary to competently instruct the operation of RADAR. This position is ***also*** supported by the ***International Association*** *of* ***Chiefs*** *of Police* and **the** ***International Association*** *of* ***Directors*** *of* ***Law Enforcement Standards and Training.*** Additional materials may be inserted whenever the need arises.

Regardless of whether content topics are expanded or contracted, instructors should provide supplementary local information for certain units. For example, current local statistics relating speed enforcement to highway safety should be incorporated so that the course applies to the area jurisdictions. Local statutory definitions of various types of speed offenses should be presented as well.

Similarly, the case law, policies, and procedures developed by the local courts and police forces must be added. These modifications will call for changes in the course as well as preparation of handouts and other instructional aids. Typically, the instructor will prepare these materials under the guidance of the training administrator.

Course Schedule - A Course schedule should be developed that is consistent with the mode of delivery, i.e, consecutive days or in blocks of instruction.

Scheduling Lessons - The classroom portion of this course is designed to be presented over not less than 40 hours.

Class Size - Classes must be kept small enough to allow the instructor and each Instructor/trainee to interact and to ensure that the training objectives are being met. This is especially important because each instructor/trainee must have enough supervised hands-on practice to become proficient with the RADAR instrument(s).

Instructor Considerations - The most important aspect of the Training Administrator's planning tasks is the selection of highly qualified instructors. It is the Training Administrator's responsibility to ensure that the instructors are adequately prepared for the assignment. Generally, all instructors must have:

- An in-depth knowledge of State and local laws, court rulings, regulations, policies, and procedures affecting speed enforcement and RADAR speed measurement;
- an exceptional knowledge of the principles of RADAR, including its physical limitations and constraints;
- a clear understanding of the highway safety implications of speed offenses and enthusiasm for safety through rigorous enforcement; and

Adding more material is another matter. This course provides what **NHTSA** recognizes to be the minimum level of knowledge necessary to competently instruct the operation of RADAR. This position is ***also*** supported by the ***International Association*** *of* ***Chiefs*** *of Police* and **the** ***International Association*** *of* ***Directors*** *of* ***Law Enforcement Standards and Training.*** Additional materials may be inserted whenever the need arises.

Regardless of whether content topics are expanded or contracted, instructors should provide supplementary local information for certain units. For example, current local statistics relating speed enforcement to highway safety should be incorporated so that the course applies to the area jurisdictions. Local statutory definitions of various types of speed offenses should be presented as well.

Similarly, the case law, policies, and procedures developed by the local courts and police forces must be added. These modifications will call for changes in the course as well as preparation of handouts and other instructional aids. Typically, the instructor will prepare these materials under the guidance of the training administrator.

Course Schedule - A Course schedule should be developed that is consistent with the mode of delivery, i.e, consecutive days or in blocks of instruction.

Scheduling Lessons - The classroom portion of this course is designed to be presented over not less than 40 hours.

Class Size - Classes must be kept small enough to allow the instructor and each Instructor/trainee to interact and to ensure that the training objectives are being met. This is especially important because each instructor/trainee must have enough supervised hands-on practice to become proficient with the RADAR instrument(s).

Instructor Considerations - The most important aspect of the Training Administrator's planning tasks is the selection of highly qualified instructors. It is the Training Administrator's responsibility to ensure that the instructors are adequately prepared for the assignment. Generally, all instructors must have:

- An in-depth knowledge of State and local laws, court rulings, regulations, policies, and procedures affecting speed enforcement and RADAR speed measurement;
- an exceptional knowledge of the principles of RADAR, including its physical limitations and constraints;
- a clear understanding of the highway safety implications of speed offenses and enthusiasm for safety through rigorous enforcement; and

realistic training conditions. However, the instructor cannot control the type or number of training situations that can be experienced.

If feasible, both the contrived (controlled target) and the natural (public road) settings should be used for RADAR practice so that skills can be developed and refined under conditions of increasing realism.

Facilities - The course requires a lecture room large enough to seat the maximum expected number of trainees. While the room should be properly lighted to permit adequate viewing of the instructional aids, you should bear in mind that fluorescent lights emit electromagnetic radiation that can interfere with RADAR speed measurement devices.

Trainees should be seated at tables with ample space for notebooks and reference materials and allowances should be made for the instructor's lectern or desk, chalkboard, projector, flip-chart, screen, and other materials. The room should be comfortable in terms of heating and ventilation.

Estimating Course Costs - Course costs should be estimated on the basis of the planning considerations discussed previously. For proper financial planning, the training administrator should consider the following cost implications carefully:

- Salaries/honoraria:
  - training administrator,
  - instructor(s) and instructor aides,
  - support staff (secretarial, clerical, custodial, etc.).
- Facilities:
  - track for controlled target vehicles (if applicable),
  - vehicles for demonstration or transport (include fuel and maintenance),
  - office space and associated equipment.
- Training Materials:
  - instructional aids (projectors, screens, slides, tapes, handouts, flip-charts, etc.),
  - training documents (e.g., course manual, reference documents),
  - recruiting materials, registration forms, data collection forms, and postage.
- Transportation and per-diem (as appropriate):
  - for the training administrator,
  - for the instructor(s) and instructor aides,
  - for the trainee.
- Instructor training (as appropriate).

realistic training conditions. However, the instructor cannot control the type or number of training situations that can be experienced.

If feasible, both the contrived (controlled target) and the natural (public road) settings should be used for RADAR practice so that skills can be developed and refined under conditions of increasing realism.

Facilities - The course requires a lecture room large enough to seat the maximum expected number of trainees. While the room should be properly lighted to permit adequate viewing of the instructional aids, you should bear in mind that fluorescent lights emit electromagnetic radiation that can interfere with RADAR speed measurement devices.

Trainees should be seated at tables with ample space for notebooks and reference materials and allowances should be made for the instructor's lectern or desk, chalkboard, projector, flip-chart, screen, and other materials. The room should be comfortable in terms of heating and ventilation.

Estimating Course Costs - Course costs should be estimated on the basis of the planning considerations discussed previously. For proper financial planning, the training administrator should consider the following cost implications carefully:

- Salaries/honoraria:
  - training administrator,
  - instructor(s) and instructor aides,
  - support staff (secretarial, clerical, custodial, etc.).
- Facilities:
  - track for controlled target vehicles (if applicable),
  - vehicles for demonstration or transport (include fuel and maintenance),
  - office space and associated equipment.
- Training Materials:
  - instructional aids (projectors, screens, slides, tapes, handouts, flip-charts, etc.),
  - training documents (e.g., course manual, reference documents),
  - recruiting materials, registration forms, data collection forms, and postage.
- Transportation and per-diem (as appropriate):
  - for the training administrator,
  - for the instructor(s) and instructor aides,
  - for the trainee.
- Instructor training (as appropriate).

3. Field practice should not extend over so long a time that the trainees forget what they learned in class.

4. Whatever the assignment plan, the supervisor should review progress closely.

5. Trainees should be assigned to patrol beats during times when they will be exposed to a wide range of operational environments.

6. Trainees should be allowed to personally evaluate and select sites for RADAR use.

7. Prior to starting on-site experience, trainees should be briefed on requirements and then be accompanied by a qualified staffer on their first 16 hours of patrol.

8. Each trainee must be able to operate both stationary and moving RADAR (if applicable) in accordance with local police agency procedures.

9. The supervisor should address techniques for visually estimating speed. Skill in estimating target vehicle speed is not difficult to attain, but it does require practice. The trainee should be required to practice until the supervisor is satisfied that the trainee can estimate speed within the agency's requirements. An allowance of plus-or-minus 5 mph overall has been generally accepted by most courts as reasonable.

10. Record keeping is an important element of field practice. Trainees should document their training periods by logging their use of RADAR devices.

These ten guidelines can be summarized in the following general goals for the supervisor:

- trainees should receive practice in realistic settings;
- trial periods should be effectively spaced;
- trainees' performance should be observed closely and regularly.

Performance - This course uses a performance appraisal method recommended for use in field practice by the Police Traffic Services Personnel Performance Evaluation System. The suggested form for performance appraisal **(see Overhead 2)** has been adapted from that publication.

Part II of the appraisal form asks the supervisor to analyze the trainees' performances. The analyses are presented in a narrative format, and the supervisor must assign a numerical rating to each **(see Overhead 3).**

The supervisor's task is to read the descriptive phrases and decide if they accurately describe the officer being evaluated. Using good judgment, the supervisor then must make one of five possible conclusions on each item concerning the officer:

- outstanding;
- better than expected;
- about what would be expected;
- needs some improvement;
- needs much improvement.

Course Management and Evaluation - The planning discussed heretofore is essential for a successful course, but does not guarantee success by itself. Course management and evaluation activities focus on the collection and analysis of two types of information: administrative data (measures of how well the course was conducted) and effectiveness data (how well it achieved its objectives). Administrative data include:

Trainee Recruiting Procedures and Forms. Are any groups of potential trainees being overlooked? Are forms being disseminated at the right times? How can recruitment be streamlined?

Instructor Recruiting Procedures and Forms, What recruitment sources are being tapped? Do the recruitment procedures adequately assess instructor qualifications? Are other untapped sources available?

Coverage and Conduct of Instructor Briefings. Do the briefings adequately cover subject matter and instructional procedures? Are the instructors fully aware of their preparation responsibilities? Are the attempts to solicit and answer instructors' questions adequate?

Trainee Attendance and Performance. What are the attendance rates? How does attendance vary from unit to unit and from one class or type of trainee to another? How is performance being judged? How does performance vary among different classes or types of trainees?

Number and Qualifications of Trainees Completing and Not Completing the Course and Reasons for Non-completion, if Known. What types of trainees are less likely to complete the course and pass the final examination(s)? What are the most common reasons for non-completion or failure? What can be done to offset them?

Number, Qualification, and Performance of Instructors and Instructor Aides. What background experience do the instructors have? How are the instructors perceived by the trainees? How adequate is the instructor's knowledge of the assigned subject matter? How adequate are instructional skills?

Adequacy and Availability of Facilities, Materials, and B&&me&-Are the facilities and other support materials of the type called for? What specific deficiencies exist? How can these be corrected?

Total Course Costs, Costs for Each Unit, Cost Per Trainee. How do actual costs compare with estimated costs? What unanticipated costs arose? What economies are possible for the future?

Information concerning these and similar issues will help the training administrator evaluate each course unit and improve the quality, efficiency, and cost-effectiveness of future course offerings. Collecting these administrative data will require the training administrator to monitor lessons, talk to instructors, and interview current and former trainees and their supervisors. In brief, the training administrator must maintain a close, personal involvement with the course well beyond the planning stage.

This involvement also applies to the collection and assessment of data on effectiveness. The administrator must establish whether the trainees have achieved the specified training objectives:

Can they describe the correlation between speed violations and highway crashes and the safety benefits of speed regulation?

Can they describe the basic principles of RADAR speed measurement?

Do they know the statutes, case law, policies, etc., that affect the use of RADAR on their general enforcement duties?

Can they identify the particular make of RADAR instrument they are to use and describe its major components and functions?

Have they acquired and can they apply the basic skills needed to test and operate the nstrument?

Have they acquired and can they apply the basic skills needed to prepare and present documentary and testimonial evidence concerning RADAR speed measurement and enforcement?

Written testing is of obvious importance in establishing whether or not the trainees have achieved the desired objectives. The training administrator should work with the instructors to develop appropriate testing materials to assess trainees' final knowledge, skills, and attitudes.

Adequacy and Availability of Facilities, Materials, and B&&me&-Are the facilities and other support materials of the type called for? What specific deficiencies exist? How can these be corrected?

Total Course Costs, Costs for Each Unit, Cost Per Trainee. How do actual costs compare with estimated costs? What unanticipated costs arose? What economies are possible for the future?

Information concerning these and similar issues will help the training administrator evaluate each course unit and improve the quality, efficiency, and cost-effectiveness of future course offerings. Collecting these administrative data will require the training administrator to monitor lessons, talk to instructors, and interview current and former trainees and their supervisors. In brief, the training administrator must maintain a close, personal involvement with the course well beyond the planning stage.

This involvement also applies to the collection and assessment of data on effectiveness. The administrator must establish whether the trainees have achieved the specified training objectives:

Can they describe the correlation between speed violations and highway crashes and the safety benefits of speed regulation?

Can they describe the basic principles of RADAR speed measurement?

Do they know the statutes, case law, policies, etc., that affect the use of RADAR on their general enforcement duties?

Can they identify the particular make of RADAR instrument they are to use and describe its major components and functions?

Have they acquired and can they apply the basic skills needed to test and operate the nstrument?

Have they acquired and can they apply the basic skills needed to prepare and present documentary and testimonial evidence concerning RADAR speed measurement and enforcement?

Written testing is of obvious importance in establishing whether or not the trainees have achieved the desired objectives. The training administrator should work with the instructors to develop appropriate testing materials to assess trainees' final knowledge, skills, and attitudes.

CHAPTER 3
INSTRUCTIONAL METHODOLOGIES

INTRODUCTION

Meaningful learning activities represent the "heart" of any curriculum. These activities are very influential in shaping the student's learning experience. Often, the learning activity will surpass the topic content in achieving the training objective.

Competent instructors will have available a wide range of instructional methodologies. They choose learning activities designed to assist the student in gaining a "personal meaning" of the content dictated by the training objectives. Failure to select an effective learning activity may result in students only "ingesting the information" which has minimal effect on behavior modification. The amount of learning experienced by the student therefore is determined by their acquisition of "personal meaning" from the presented material.

Selection Considerations

The methodologies and learning activities instructors choose will be affected by six elements:

- Nature of the content
- Abilities of the instructor
- Size of the class
- Location of instruction
- The level of the student's knowledge and motivation
- Practice and application

Each of these elements must be considered prior to selecting specific methodologies and learning activities.

Nature of the Content - The topic's training objectives and text usually dictate the instructional approach. If students are expected to obtain a skill, then demonstration and practical exercises are essential. If the accompanying text is extensive or complex, then lecture may be more appropriate than group discussion. Additional elements, such as class size or allotted time will influence the instructor when selecting the appropriate method for presenting the material.

Abilities of the Instructors - It is important for instructors to be competent with various instructional methodologies and learning activities. The requirements on the instructor will vary depending on the method utilized. Instructors that experiment with the different methods available are cognizant of the demands, advantages, limitations and degree of enhancement to the learning process represented by those methods. Instructors who continually restrict their selection because of deficient skill levels, topic knowledge or personal preference may impair the learning process. Instructors should strive to become competent in various methodologies and activities.

Size of the Class - The effectiveness of certain methods and activities will diminish as the number of students increases or decreases. Group discussions involving more than eight (8) students are often not particularly effective. Practical exercises or on-street activities should be limited to three (3) students and one (1) instructor per vehicle.

Location of Instruction - Prior to selecting a particular method or activity, instructors must consider the course's location and the facilities available. Some facilities may prove restrictive in their adaptability for certain methods or activities, i.e., an auditorium is perfect for a lecture but not group discussions. If a particular method or activity is required, facility arrangements must be made in advance to ensure compatibility.

The course's location may create a situation in which the instructor is forced to select a method he/she feels is not the most effective choice. In these situations, instructors should consider mixing or combining methods. Each student will comprehend the material in different ways. By not limiting their approach, instructors can provide the students with an environment that will maximize their learning capabilities.

The Level of the Student's Knowledge and Motivation - To a large degree, adult learners will come to the classroom with varied social and academic experiences which may have already influenced their ability to learn new skills or acquire new knowledge. These experiences may be productive or counterproductive to the learning process. Basic to adult learning is "Appreciation, " which can be defined in terms of attitudes, ideals, interests, habits, and dislikes. It is well recognized that the attitude of the student acquiring skills, knowledge, and techniques will determine how effective his or her effort will be. Unfortunately, attitudes and ideals of adults in general, and law enforcement officers in particular, are often left to chance.

In view of this, the instructor must recognize that "Motivation" becomes a valuable tool in creating the desire to learn. If a student's appreciation interferes with the learning process, then the instructor must utilize motivation to aid in the learning process. Motivation can be divided into two classes, specific and general. Specific motives are those aroused by a single objective which satisfies the motive. An officer who is interested in traffic safety has a motive for studying RADAR operations. General motives will apply to a number of

Abilities of the Instructors - It is important for instructors to be competent with various instructional methodologies and learning activities. The requirements on the instructor will vary depending on the method utilized. Instructors that experiment with the different methods available are cognizant of the demands, advantages, limitations and degree of enhancement to the learning process represented by those methods. Instructors who continually restrict their selection because of deficient skill levels, topic knowledge or personal preference may impair the learning process. Instructors should strive to become competent in various methodologies and activities.

Size of the Class - The effectiveness of certain methods and activities will diminish as the number of students increases or decreases. Group discussions involving more than eight (8) students are often not particularly effective. Practical exercises or on-street activities should be limited to three (3) students and one (1) instructor per vehicle.

Location of Instruction - Prior to selecting a particular method or activity, instructors must consider the course's location and the facilities available. Some facilities may prove restrictive in their adaptability for certain methods or activities, i.e., an auditorium is perfect for a lecture but not group discussions. If a particular method or activity is required, facility arrangements must be made in advance to ensure compatibility.

The course's location may create a situation in which the instructor is forced to select a method he/she feels is not the most effective choice. In these situations, instructors should consider mixing or combining methods. Each student will comprehend the material in different ways. By not limiting their approach, instructors can provide the students with an environment that will maximize their learning capabilities.

The Level of the Student's Knowledge and Motivation - To a large degree, adult learners will come to the classroom with varied social and academic experiences which may have already influenced their ability to learn new skills or acquire new knowledge. These experiences may be productive or counterproductive to the learning process. Basic to adult learning is "Appreciation, " which can be defined in terms of attitudes, ideals, interests, habits, and dislikes. It is well recognized that the attitude of the student acquiring skills, knowledge, and techniques will determine how effective his or her effort will be. Unfortunately, attitudes and ideals of adults in general, and law enforcement officers in particular, are often left to chance.

In view of this, the instructor must recognize that "Motivation" becomes a valuable tool in creating the desire to learn. If a student's appreciation interferes with the learning process, then the instructor must utilize motivation to aid in the learning process. Motivation can be divided into two classes, specific and general. Specific motives are those aroused by a single objective which satisfies the motive. An officer who is interested in traffic safety has a motive for studying RADAR operations. General motives will apply to a number of

subjects. An officer desires to become a supervisor; therefore, he wants to do everything well so that his record will indicate that he is capable of performing the duties of a supervisor.

Any instructional session lasting longer than two (2) hours in duration should employ more than one method or type of learning activity. Varying the teaching strategies will keep the students alert, interested, and active in their level of participation. An adult's attention span is not unlimited. The learning process will be enhanced by variations in instructional methods and activities, when combined with regular breaks.

Practice and Application - There is no one method or activity which is inherently better than the others. Instructors must select the one, or a combination, which will best suit the course content, instructor's ability, size of the class, and available facility.

Suggested Instructional Methodologies

The most common types of instructional methods are listed here. To help in the selection of methods, a number of considerations are discussed for each method.

Lecture - Verbal presentation where the instructor(s) develops the subject matter without student participation and with only limited questioning.

- Advantages:
  - can be used for any size audience, especially a large group
  - conveys a large amount of information in a short time,
  - allows complex information to be presented,
  - lays the groundwork for later discussion.

- Limitations:
  - passive audience,
  - rigid in presentation,
  - clarification of points of confusion not immediate,
  - not individualized.

- Audience Size:
  - any size; no maximum.

subjects. An officer desires to become a supervisor; therefore, he wants to do everything well so that his record will indicate that he is capable of performing the duties of a supervisor.

Any instructional session lasting longer than two (2) hours in duration should employ more than one method or type of learning activity. Varying the teaching strategies will keep the students alert, interested, and active in their level of participation. An adult's attention span is not unlimited. The learning process will be enhanced by variations in instructional methods and activities, when combined with regular breaks.

Practice and Application - There is no one method or activity which is inherently better than the others. Instructors must select the one, or a combination, which will best suit the course content, instructor's ability, size of the class, and available facility.

Suggested Instructional Methodologies

The most common types of instructional methods are listed here. To help in the selection of methods, a number of considerations are discussed for each method.

Lecture - Verbal presentation where the instructor(s) develops the subject matter without student participation and with only limited questioning.

- Advantages:
  - can be used for any size audience, especially a large group
  - conveys a large amount of information in a short time,
  - allows complex information to be presented,
  - lays the groundwork for later discussion.

- Limitations:
  - passive audience,
  - rigid in presentation,
  - clarification of points of confusion not immediate,
  - not individualized.

- Audience Size:
  - any size; no maximum.

- Ways to Enhance Learning:
  - survey the audience in advance, if possible, as to needs and incorporate these into the lecture,
  - distribute materials as a pre-class assignment,
  - distribute content outline to reduce note-taking,
  - use examples from audience frame of reference
  - use audiovisuals to stress major points,
  - add a question and answer period at the end.

Demonstration; Classroom - An observable manipulation of objects used to display an event or a set of events.

- Advantages:
  - objective and concrete,
  - focus on steps and procedures,
  - ideal for teaching "skills,"
  - combination of theory and practice,
  - problem oriented.

- Limitations:
  - not suitable for all content,
  - size of audience is limited,
  - seating arrangement is important,
  - preparation of equipment is necessary.

- Audience Size
  - Limited to the number who can be seated with a clear view of the demonstration. A semicircular seating arrangement may be better than the traditional rectangular one.

- Ways to Enhance Learning:
  - make demonstration reality-based,
  - use equipment that students will use on the job,
  - demonstrate the skill and describe what is taking place,
  - allow time for supervised practice,
  - give students a list of steps prior to the demonstration,
  - repeat main points more than once for emphasis,
  - allow for time for questions and answers,
  - demonstrations are a good hands-on practice activity.

- Ways to Enhance Learning:
  - survey the audience in advance, if possible, as to needs and incorporate these into the lecture,
  - distribute materials as a pre-class assignment,
  - distribute content outline to reduce note-taking,
  - use examples from audience frame of reference
  - use audiovisuals to stress major points,
  - add a question and answer period at the end.

Demonstration; Classroom - An observable manipulation of objects used to display an event or a set of events.

- Advantages:
  - objective and concrete,
  - focus on steps and procedures,
  - ideal for teaching "skills,"
  - combination of theory and practice,
  - problem oriented.

- Limitations:
  - not suitable for all content,
  - size of audience is limited,
  - seating arrangement is important,
  - preparation of equipment is necessary.

- Audience Size
  - Limited to the number who can be seated with a clear view of the demonstration. A semicircular seating arrangement may be better than the traditional rectangular one.

- Ways to Enhance Learning:
  - make demonstration reality-based,
  - use equipment that students will use on the job,
  - demonstrate the skill and describe what is taking place,
  - allow time for supervised practice,
  - give students a list of steps prior to the demonstration,
  - repeat main points more than once for emphasis,
  - allow for time for questions and answers,
  - demonstrations are a good hands-on practice activity.

Demonstration; On-the-Street or Practical Exercise Area - Observation of, or participation in, the demonstration of a desired skill. The student may be outside or inside the vehicle. Training is performed on a specially designed practical exercise area or on an actual public roadway.

- Advantages:
  - active and dynamic,combination of theory and practical experience,
  - easier correlation between theory and real-world conditions,
  - opportunity to focus on a portion of a task,
  - increases opportunities for decision-making,
  - promotes the learning process and a practice format,
  - supplies honest and timely feedback,
  - increases class learning exposure,
  - longer retention of knowledge, skills, and behavior,
  - measurable performance with absolute results,
  - individual instruction,
  - modification of activity to meet individual needs or to be more challenging,

- Limitations:
  - limited group size,
  - time consuming,
  - more staff required to maintain acceptable instructor to student ratios,
  - environmental factors (topography, weather, surrounding facilities) may limit the type of training,
  - costly,
  - higher degree of danger encountered.

- Audience Size:
  - demonstrations should be limited to one (1) instructor per three (3) students.

- Ways to Enhance Learning:
  - conduct theory or introduction sessions prior to the event,
  - create a reality-based activity,
  - avoid dramatics and entertainment; stay on the task,
  - use diagrams or handouts to enhance a concept,
  - encourage participation; allow time for discussion,
  - allow experimentation when appropriate,
  - conduct a debriefing session to summarize events.

Demonstration; On-the-Street or Practical Exercise Area - Observation of, or participation in, the demonstration of a desired skill. The student may be outside or inside the vehicle. Training is performed on a specially designed practical exercise area or on an actual public roadway.

- Advantages:
  - active and dynamic,combination of theory and practical experience,
  - easier correlation between theory and real-world conditions,
  - opportunity to focus on a portion of a task,
  - increases opportunities for decision-making,
  - promotes the learning process and a practice format,
  - supplies honest and timely feedback,
  - increases class learning exposure,
  - longer retention of knowledge, skills, and behavior,
  - measurable performance with absolute results,
  - individual instruction,
  - modification of activity to meet individual needs or to be more challenging,

- Limitations:
  - limited group size,
  - time consuming,
  - more staff required to maintain acceptable instructor to student ratios,
  - environmental factors (topography, weather, surrounding facilities) may limit the type of training,
  - costly,
  - higher degree of danger encountered.

- Audience Size:
  - demonstrations should be limited to one (1) instructor per three (3) students.

- Ways to Enhance Learning:
  - conduct theory or introduction sessions prior to the event,
  - create a reality-based activity,
  - avoid dramatics and entertainment; stay on the task,
  - use diagrams or handouts to enhance a concept,
  - encourage participation; allow time for discussion,
  - allow experimentation when appropriate,
  - conduct a debriefing session to summarize events.

Conference/Discussion - This method of instruction includes activities that tend to develop an active interchange of ideas between the instructor(s) and the students and from student to student.

- Advantages:
  - an active and motivating learning process,
  - sharing of diverse viewpoints,
  - helps students organize and present ideas,
  - retention is longer than in passive learning situations,
  - develops critical thinking.

- Limitations:
  - requires time for an instructor to develop group processing skills,
  - may take longer to cover content,
  - students need to have some prior understanding of content,
  - not suitable for complex or technical content,
  - easy to get into irrelevant discussion.

- Audience Size:
  - group should have not more than eight (8) members to promote optimum participation. Larger groups restrict individual contributions. A group leader for each group is needed.

- Ways to Enhance Learning:
  - provide preparatory material to avoid wasting time,
  - keep discussion relevant to the topic,
  - be positive,
  - encourage student participation.

Simulation - Replication or re-enactment of a real life situation or event.

- Advantages:
  - allows for learning in a non-threatening environment,
  - allows students to develop at their own pace,
  - allows students to experience reality based occurrences,
  - reduces danger to community members from inexperienced practitioners,
  - works well for procedures and skills.

Conference/Discussion - This method of instruction includes activities that tend to develop an active interchange of ideas between the instructor(s) and the students and from student to student.

- Advantages:
  - an active and motivating learning process,
  - sharing of diverse viewpoints,
  - helps students organize and present ideas,
  - retention is longer than in passive learning situations,
  - develops critical thinking.

- Limitations:
  - requires time for an instructor to develop group processing skills,
  - may take longer to cover content,
  - students need to have some prior understanding of content,
  - not suitable for complex or technical content,
  - easy to get into irrelevant discussion.

- Audience Size:
  - group should have not more than eight (8) members to promote optimum participation. Larger groups restrict individual contributions. A group leader for each group is needed.

- Ways to Enhance Learning:
  - provide preparatory material to avoid wasting time,
  - keep discussion relevant to the topic,
  - be positive,
  - encourage student participation.

Simulation - Replication or re-enactment of a real life situation or event.

- Advantages:
  - allows for learning in a non-threatening environment,
  - allows students to develop at their own pace,
  - allows students to experience reality based occurrences,
  - reduces danger to community members from inexperienced practitioners,
  - works well for procedures and skills.

- Limitations:
  - time consuming to prepare,
  - limits audience size,
  - equipment and preparation may be costly,
  - some simulations cannot be moved from place to place,
  - commercially prepared simulations are limited.

- Audience Size:
  - varies according to the number of students that can be accommodated by the equipment or simulation. Large groups can be handled by multiple sessions or a staggered starting time.

- Ways to Enhance Learning:
  - make the simulation as similar to the learners' experience as possible,
  - keep the content problem-centered rather than subject-centered,
  - allow students to suggest or select the type of situation or event,
  - allow sufficient time for practice,
  - simulations are a good hands-on practice activity.

Resource- Small groups of people who have expertise in a particular content area, involved in carrying on a conversation before an audience.

- Advantages:
  - builds empathetic understanding of uncommon and unfamiliar experiences,
  - gives the students exposure to several areas of expertise and points of view,
  - reduces the need for an instructor to have specialized knowledge in every content area,
  - use of external "consultants" adds to students' acceptance of concepts with which they are unfamiliar.

- Limitations:
  - can be expensive,
  - time required to identify the best available resource people,
  - scheduling resource people around their diverse schedules,
  - time consuming to assemble group,
  - requires the group participants to be very well informed on the subject being discussed.

- Limitations:
  - time consuming to prepare,
  - limits audience size,
  - equipment and preparation may be costly,
  - some simulations cannot be moved from place to place,
  - commercially prepared simulations are limited.

- Audience Size:
  - varies according to the number of students that can be accommodated by the equipment or simulation. Large groups can be handled by multiple sessions or a staggered starting time.

- Ways to Enhance Learning:
  - make the simulation as similar to the learners' experience as possible,
  - keep the content problem-centered rather than subject-centered,
  - allow students to suggest or select the type of situation or event,
  - allow sufficient time for practice,
  - simulations are a good hands-on practice activity.

Resource- Small groups of people who have expertise in a particular content area, involved in carrying on a conversation before an audience.

- Advantages:
  - builds empathetic understanding of uncommon and unfamiliar experiences,
  - gives the students exposure to several areas of expertise and points of view,
  - reduces the need for an instructor to have specialized knowledge in every content area,
  - use of external "consultants" adds to students' acceptance of concepts with which they are unfamiliar.

- Limitations:
  - can be expensive,
  - time required to identify the best available resource people,
  - scheduling resource people around their diverse schedules,
  - time consuming to assemble group,
  - requires the group participants to be very well informed on the subject being discussed.

- Audience Size:
  - no real restrictions.

- Ways to Enhance Learning:
  - use students as resource people when possible,
  - invite students to help plan for and decide on appropriate resource people,
  - encourage the participation of resource people who are familiar with the type of students and information that needs to be presented.

Question-Answer Session - An unstructured dialogue using questions from students.

- Advantages:
  - allows interchange of ideas between instructor and students,
  - invokes an active response from students,
  - meets specific needs of students,
  - provides for sharing information among students.

- Limitations:
  - time consuming to achieve objectives,
  - hard to achieve specific objective unless key questions are planted,
  - students may need encouragement to ask questions,
  - may be difficult to have all students hear questions.

- Audience Size:
  - no real restrictions.

- Ways to Enhance Learning:
  - allow sufficient time for all questions,
  - if students are reluctant to start the questions, have some key questions planted in the group,
  - use this method as a follow-up to a more structured instructional strategy,
  - if the group is too large, have students write questions on index cards.

Notes Page

Notes Page

Notes Page

- Audience Size:
  - no real restrictions.

- Ways to Enhance Learning:
  - use real life incidents familiar to the students,
  - allow for sufficient time for students to review, analyze, discuss and evaluate the various solutions,
  - when possible, generalize incidents to other similar situations,
  - have the study reflect material already presented to the students and use the case study as an opportunity to have students apply their knowledge practically.

Case studies are a good hands-on practice activity. Case studies should involve case briefs, moot court scenarios, or simulated violator interactions.

Teaching Aids

People can learn in different ways, but usually they learn best in only one or two ways. Some need to hear the content, others need to see it or read it, and still others need to touch or manipulate objects.

Consequently, the students in the class may be composed of people with different learning styles. Lectures teach only the audio learner. Lectures using transparencies pick up the visual learner. While it may not be possible to involve all of the senses, the more senses involved, the more learning that is likely to occur. The use of teaching aids gives a flexibility not found in a "one method" instructional style.

An important consideration for any instructor is how to structure the material in such a manner that it will appeal to as many human senses as possible. Although we have discussed different aspects of learning, it must be understood that learning can also be defined within certain parameters of stimuli affecting the five (5) senses of sight, hearing, touch, taste, smell, or a combination of several of these. Through these senses (the individual makes contact with the things about himself/herself) responses are initiated which result in the acquisition of new knowledge, skills, or attitude adjustment. It is the instructor's responsibility to provide learning situations that maximize the use of senses to produce the desired responses.

Average persons will remember:

- 10 percent of what they hear
- 30 percent of what they see
- 80 percent of what they do

- Audience Size:
  - no real restrictions.

- Ways to Enhance Learning:
  - use real life incidents familiar to the students,
  - allow for sufficient time for students to review, analyze, discuss and evaluate the various solutions,
  - when possible, generalize incidents to other similar situations,
  - have the study reflect material already presented to the students and use the case study as an opportunity to have students apply their knowledge practically.

Case studies are a good hands-on practice activity. Case studies should involve case briefs, moot court scenarios, or simulated violator interactions.

Teaching Aids

People can learn in different ways, but usually they learn best in only one or two ways. Some need to hear the content, others need to see it or read it, and still others need to touch or manipulate objects.

Consequently, the students in the class may be composed of people with different learning styles. Lectures teach only the audio learner. Lectures using transparencies pick up the visual learner. While it may not be possible to involve all of the senses, the more senses involved, the more learning that is likely to occur. The use of teaching aids gives a flexibility not found in a "one method" instructional style.

An important consideration for any instructor is how to structure the material in such a manner that it will appeal to as many human senses as possible. Although we have discussed different aspects of learning, it must be understood that learning can also be defined within certain parameters of stimuli affecting the five (5) senses of sight, hearing, touch, taste, smell, or a combination of several of these. Through these senses (the individual makes contact with the things about himself/herself) responses are initiated which result in the acquisition of new knowledge, skills, or attitude adjustment. It is the instructor's responsibility to provide learning situations that maximize the use of senses to produce the desired responses.

Average persons will remember:

- 10 percent of what they hear
- 30 percent of what they see
- 80 percent of what they do

The term "teaching aid" is being used for almost any instructional enhancement such as tapes, films, slides, video cassettes, transparencies, flip charts, boards, or models. It encompasses purchased materials as well as instructor-developed items. Plans for teaching aids need to be made as early as possible to allow time for development, rental, or purchase. The most important consideration for the use of teaching aids is that they support and enhance the teaching-learning process. Five common types of teaching aids, with attention to description, advantages, disadvantages, costs, uses, and development by instructor are presented in the following section.

Transparencies - Transparent sheets are usually made of acetate and projected on a screen or wall. Information is put on sheets by using special marker pens or a special type of hot copier.

- Advantage:
  - simple to use and easy to make,
  - inexpensive,
  - reusable,
  - the instructor faces the class,
  - suitable for all methods of instruction,
  - commercial ones available,
  - presentation rate controlled by instructor.

- Limitation:
  - loses definition in a large room or auditorium,
  - need an overhead projector,
  - awkward,
  - limited flexibility.

- [illegible]
  - overhead projector,
  - acetate sheets,
  - pens, stencils;
  - purchase of commercially prepared transparencies.

- Uses:
  - list steps in a procedure,
  - illustrate points,
  - display tables, charts, or graphs,
  - list discussion questions.

Notes Page

Notes Page

Notes Page

Notes Page

Notes Page

Notes Page

Notes Page

- have time for discussion and sharing information after the showing,
- if skill is demonstrated in the slides, have suitable equipment available for practice.

Models- An artificial representation of something, such as a model car.

- Advantages:
  - provides realistic examples for practice or demonstration situations,
  - allows safe, non-threatening practice,
  - provides flexibility in scheduling,
  - is more accessible than a real item,
  - can be used in many instructional units.

- Limitations:
  - quality will determine how realistic it is,
  - may be too costly to design and develop.

- [illegible]
  - varies with technical quality and type of model,
  - reusable in different settings and units.

- Uses:
  - illustrate material,
  - provide examples,
  - provide practice,
  - demonstrate procedure.

- Acquisition:
  - most instructors purchase models, rather than make them, to obtain more realistic models,
  - see models before you purchase them,
  - work with other instructors to see what models can be shared over several instructional units.

- have time for discussion and sharing information after the showing,
- if skill is demonstrated in the slides, have suitable equipment available for practice.

Models- An artificial representation of something, such as a model car.

- Advantages:
  - provides realistic examples for practice or demonstration situations,
  - allows safe, non-threatening practice,
  - provides flexibility in scheduling,
  - is more accessible than a real item,
  - can be used in many instructional units.

- Limitations:
  - quality will determine how realistic it is,
  - may be too costly to design and develop.

- [illegible]
  - varies with technical quality and type of model,
  - reusable in different settings and units.

- Uses:
  - illustrate material,
  - provide examples,
  - provide practice,
  - demonstrate procedure.

- Acquisition:
  - most instructors purchase models, rather than make them, to obtain more realistic models,
  - see models before you purchase them,
  - work with other instructors to see what models can be shared over several instructional units.

4A HISTORY and THEORY

FUNDAMENTAL CONCEPT

The word "RADAR" is an acronym. It is an abbreviation of the phrase RAdio Detection And Ranging. This acronym implies that all RADAR has the capability of providing information that a target is present (detection) and the range of the target. You no doubt already realize that the acronym, as defined, does not exactly fit the description of the speed-measuring RADAR we use. Police RADAR provides you with a speed reading of a detected target, but not the range to the target. Did the inventors make a mistake in their acronym? The acronym that includes range is correct for about 90% of the RADAR in use today. The police RADAR, however, is one type of a small family of RADAR that provides no range information. It is important to know that many types of RADAR exist. Some are very complex while others, like the police units, are relatively simple.

Even though there are many variations and different features between types and families of RADAR, the underlying principle remains the same: radio-frequency energy is generated by a transmitter, the antenna forms the energy into a beam and the energy is propagated into space. When the energy (or signal, as it is commonly called) strikes an object, a small amount is reflected back to the antenna. From the antenna, it is sent to the receiver where; if the signal is strong enough, it is recognized or "detected". Thus, the RADAR operator learns that a target is present in the beam. The way in which the energy reflected from the target is processed by the receiver determines what type of information will be available to the operator. Radio energy always travels at 186,282 miles per second. You probably recognize that number as the speed of light. Both radio energy and light energy travel at that speed. The speed of radio energy is, therefore, a "constant" in all of the computations that are performed in any RADAR set. As we will see later in this course, the speed of radio energy, 186,282 miles per second, never changes even when the RADAR is needed to determine the speed of moving targets.

Police RADAR uses another characteristic of radio energy in order to measure speed. That characteristic is, that the frequency (cycles per second) of a radio signal is changed when the signal is reflected from a target that is moving at a different speed than the RADAR set. This change or shift in frequency is known as the "Doppler" shift and will be explained in more detail later. You now understand the principle on which speed-measuring RADAR works. If there is relative motion between the RADAR and the target, there will be a shift between the transmitted frequency and the reflected frequency of the signal received back from the target, The greater the relative motion, the greater the frequency shift, By measuring the amount of the frequency shift, the RADAR is able to calculate and display the target speed in miles per hour.

4A HISTORY and THEORY

FUNDAMENTAL CONCEPT

The word "RADAR" is an acronym. It is an abbreviation of the phrase RAdio Detection And Ranging. This acronym implies that all RADAR has the capability of providing information that a target is present (detection) and the range of the target. You no doubt already realize that the acronym, as defined, does not exactly fit the description of the speed-measuring RADAR we use. Police RADAR provides you with a speed reading of a detected target, but not the range to the target. Did the inventors make a mistake in their acronym? The acronym that includes range is correct for about 90% of the RADAR in use today. The police RADAR, however, is one type of a small family of RADAR that provides no range information. It is important to know that many types of RADAR exist. Some are very complex while others, like the police units, are relatively simple.

Even though there are many variations and different features between types and families of RADAR, the underlying principle remains the same: radio-frequency energy is generated by a transmitter, the antenna forms the energy into a beam and the energy is propagated into space. When the energy (or signal, as it is commonly called) strikes an object, a small amount is reflected back to the antenna. From the antenna, it is sent to the receiver where; if the signal is strong enough, it is recognized or "detected". Thus, the RADAR operator learns that a target is present in the beam. The way in which the energy reflected from the target is processed by the receiver determines what type of information will be available to the operator. Radio energy always travels at 186,282 miles per second. You probably recognize that number as the speed of light. Both radio energy and light energy travel at that speed. The speed of radio energy is, therefore, a "constant" in all of the computations that are performed in any RADAR set. As we will see later in this course, the speed of radio energy, 186,282 miles per second, never changes even when the RADAR is needed to determine the speed of moving targets.

Police RADAR uses another characteristic of radio energy in order to measure speed. That characteristic is, that the frequency (cycles per second) of a radio signal is changed when the signal is reflected from a target that is moving at a different speed than the RADAR set. This change or shift in frequency is known as the "Doppler" shift and will be explained in more detail later. You now understand the principle on which speed-measuring RADAR works. If there is relative motion between the RADAR and the target, there will be a shift between the transmitted frequency and the reflected frequency of the signal received back from the target, The greater the relative motion, the greater the frequency shift, By measuring the amount of the frequency shift, the RADAR is able to calculate and display the target speed in miles per hour.

Notes Page

Notes Page

Notes Page

Notes Page

Notes Page

In summary, the closer the set up to the traveled portion of the road, the better control over the Cosine Angle Effect. RADAR operators occasionally set up at an appreciable distance from the road surface. You should be aware that this will magnify the impact of the Cosine Angle Effect. The result is that the greater the angle from directly in front of the target vehicle that the radar speed measurement is taken, the lower the speed reading will be.

How we aim, or point, the RADAR device will have an impact on the magnitude of the Cosine Angle Effect. Aim the RADAR antenna directly down the road at the oncoming vehicles, thus, minimizing the Cosine Angle Effect. Remember, with stationary RADAR the Cosine Angle Effect is always in the violator's favor. The Cosine Angle Effect on moving RADAR is discussed in the following sections, but may not be in the favor of the violator.

RADAR Target Selectivity and Sensitivity

In all of our discussions, thus far, we have implicitly assumed that a RADAR device will always detect the reflected signal from any moving object it is pointed toward. That is not quite true.

Depending on the size, shape, speed and exact location of the object in the beam, its reflected signal may not be "seen" by the RADAR unit. In order to understand the concept of selectivity and sensitivity, they must first be defined:

Selectivity - is defined as the RADAR's and the RADAR operator's ability to "see" or measure the speed of a particular target vehicle with respect to other vehicles around it. Example: Which vehicle in the group am I reading now?

Sensitivity - is defined as the RADAR's ability to see or measure the speed of a target with regard to the distance that a RADAR speed reading occurs from the RADAR antenna. Example: Greater sensitivity is associated with the longer range of the unit which enables the unit to read weaker signals.

(By the term "Range", we are referring to effective range that deals with the distance that an accurate speed measurement can be taken and not the length of the RADAR beam which is always infinite).

Understand how problems with target sensitivity and selectivity can occur, we need to understand how the RADAR beam spreads and how it is reflected by the object it strikes. The RADAR transmitter does not send out energy in all directions. Instead the transmitter's antenna focuses most of the energy into a cone-shaped beam. This RADAR beam is very similar to the beam of light that is sent out by a searchlight. (Overhead **10)** A small portion of the energy escapes outside the main beam, in what are termed the side lobes. Side lobes are usually insignificant in power. These lobes are caused by minor imperfections in the

In summary, the closer the set up to the traveled portion of the road, the better control over the Cosine Angle Effect. RADAR operators occasionally set up at an appreciable distance from the road surface. You should be aware that this will magnify the impact of the Cosine Angle Effect. The result is that the greater the angle from directly in front of the target vehicle that the radar speed measurement is taken, the lower the speed reading will be.

How we aim, or point, the RADAR device will have an impact on the magnitude of the Cosine Angle Effect. Aim the RADAR antenna directly down the road at the oncoming vehicles, thus, minimizing the Cosine Angle Effect. Remember, with stationary RADAR the Cosine Angle Effect is always in the violator's favor. The Cosine Angle Effect on moving RADAR is discussed in the following sections, but may not be in the favor of the violator.

RADAR Target Selectivity and Sensitivity

In all of our discussions, thus far, we have implicitly assumed that a RADAR device will always detect the reflected signal from any moving object it is pointed toward. That is not quite true.

Depending on the size, shape, speed and exact location of the object in the beam, its reflected signal may not be "seen" by the RADAR unit. In order to understand the concept of selectivity and sensitivity, they must first be defined:

Selectivity - is defined as the RADAR's and the RADAR operator's ability to "see" or measure the speed of a particular target vehicle with respect to other vehicles around it. Example: Which vehicle in the group am I reading now?

Sensitivity - is defined as the RADAR's ability to see or measure the speed of a target with regard to the distance that a RADAR speed reading occurs from the RADAR antenna. Example: Greater sensitivity is associated with the longer range of the unit which enables the unit to read weaker signals.

(By the term "Range", we are referring to effective range that deals with the distance that an accurate speed measurement can be taken and not the length of the RADAR beam which is always infinite).

Understand how problems with target sensitivity and selectivity can occur, we need to understand how the RADAR beam spreads and how it is reflected by the object it strikes. The RADAR transmitter does not send out energy in all directions. Instead the transmitter's antenna focuses most of the energy into a cone-shaped beam. This RADAR beam is very similar to the beam of light that is sent out by a searchlight. **(Overhead 10)** A small portion of the energy escapes outside the main beam, in what are termed the side lobes. Side lobes are usually insignificant in power. These lobes are caused by minor imperfections in the

RADAR antenna. Within the central core of the beam, the concentration of energy or main beam strength, drops off the further we go from the transmitter. If an object is far from the transmitter, it will be struck by relatively little energy; therefore, it will reflect proportionately less energy back towards the RADAR antenna. In discussing target selectivity, it might seem logical to think that if we use careful aim we can put the RADAR beam right on a particular vehicle and keep the beam off any other vehicles that happen to be in that area. The problem is that a RADAR beam is fairly wide. **(Overhead 11)**. Even the narrowest-beam RADAR currently available is about 10 degrees wide; some devices have beams that are more than 20 degrees wide. A beam whose angle is 10 degrees will be more than 38 feet wide at a point 200 feet down the road. It will be more than 57 feet wide at a point 300 feet away. Obviously, by the time the beam extends even a few hundred feet, it is impossible to keep all of it within a single lane of traffic, let alone on a single vehicle. One thing that can be done is to carefully set the RADAR's beam range. The term "beam range" is sometimes confusing; it does not mean the length of the transmitted beam. A RADAR signal's length is actually infinite. (It will travel forever unless it is stopped by some object that reflects or absorbs it). When we talk about beam range, however, we mean how far away a moving object can be and still be measured by the RADAR.

Target Sensitivity - determined by:

- composition of the target (metal, glass),
- shape of the target,
- energy received by the target (distance, size, location in beam).

Not all objects reflect RADAR energy equally well. Metal objects reflect the beam quite well. Glass and plastic objects allow most of the beam to pass right through them without reflection. Some other objects such as leaves, tall grass, etc., absorb a good deal of the RADAR energy that strikes them.

If the RADAR is to measure the speed of an object, it has to receive some minimum of energy from that object. For example, a motorcycle is relatively small and contains little metal in comparison to other vehicles. Therefore, motorcycles will reflect relatively little energy, so the RADAR will not measure its speed until it is quite close to the RADAR antenna. On the other hand, a tractor - trailer contains a great deal of metal mass and reflects a relatively large amount of energy. Therefore, we might be able to measure a tractor - trailer's speed even when it is far away from the antenna.

The shape of a vehicle or other object effects how much energy it reflects. If the surface is perpendicular to the beam, most of the energy will reflect right back toward the RADAR. If the surface is slanted, some of the reflected energy will head off into space and will not be returned. **Overhead 12** illustrates this phenomenon. Here we see two objects, a truck and a sports car, being struck by the RADAR beam. The truck has a large vertical surface

RADAR antenna. Within the central core of the beam, the concentration of energy or main beam strength, drops off the further we go from the transmitter. If an object is far from the transmitter, it will be struck by relatively little energy; therefore, it will reflect proportionately less energy back towards the RADAR antenna. In discussing target selectivity, it might seem logical to think that if we use careful aim we can put the RADAR beam right on a particular vehicle and keep the beam off any other vehicles that happen to be in that area. The problem is that a RADAR beam is fairly wide. **(Overhead 11)**. Even the narrowest-beam RADAR currently available is about 10 degrees wide; some devices have beams that are more than 20 degrees wide. A beam whose angle is 10 degrees will be more than 38 feet wide at a point 200 feet down the road. It will be more than 57 feet wide at a point 300 feet away. Obviously, by the time the beam extends even a few hundred feet, it is impossible to keep all of it within a single lane of traffic, let alone on a single vehicle. One thing that can be done is to carefully set the RADAR's beam range. The term "beam range" is sometimes confusing; it does not mean the length of the transmitted beam. A RADAR signal's length is actually infinite. (It will travel forever unless it is stopped by some object that reflects or absorbs it). When we talk about beam range, however, we mean how far away a moving object can be and still be measured by the RADAR.

Target Sensitivity - determined by:

- composition of the target (metal, glass),
- shape of the target,
- energy received by the target (distance, size, location in beam).

Not all objects reflect RADAR energy equally well. Metal objects reflect the beam quite well. Glass and plastic objects allow most of the beam to pass right through them without reflection. Some other objects such as leaves, tall grass, etc., absorb a good deal of the RADAR energy that strikes them.

If the RADAR is to measure the speed of an object, it has to receive some minimum of energy from that object. For example, a motorcycle is relatively small and contains little metal in comparison to other vehicles. Therefore, motorcycles will reflect relatively little energy, so the RADAR will not measure its speed until it is quite close to the RADAR antenna. On the other hand, a tractor - trailer contains a great deal of metal mass and reflects a relatively large amount of energy. Therefore, we might be able to measure a tractor - trailer's speed even when it is far away from the antenna.

The shape of a vehicle or other object effects how much energy it reflects. If the surface is perpendicular to the beam, most of the energy will reflect right back toward the RADAR. If the surface is slanted, some of the reflected energy will head off into space and will not be returned. **Overhead 12** illustrates this phenomenon. Here we see two objects, a truck and a sports car, being struck by the RADAR beam. The truck has a large vertical surface

RADAR antenna. Within the central core of the beam, the concentration of energy or main beam strength, drops off the further we go from the transmitter. If an object is far from the transmitter, it will be struck by relatively little energy; therefore, it will reflect proportionately less energy back towards the RADAR antenna. In discussing target selectivity, it might seem logical to think that if we use careful aim we can put the RADAR beam right on a particular vehicle and keep the beam off any other vehicles that happen to be in that area. The problem is that a RADAR beam is fairly wide. **(Overhead 11)**. Even the narrowest-beam RADAR currently available is about 10 degrees wide; some devices have beams that are more than 20 degrees wide. A beam whose angle is 10 degrees will be more than 38 feet wide at a point 200 feet down the road. It will be more than 57 feet wide at a point 300 feet away. Obviously, by the time the beam extends even a few hundred feet, it is impossible to keep all of it within a single lane of traffic, let alone on a single vehicle. One thing that can be done is to carefully set the RADAR's beam range. The term "beam range" is sometimes confusing; it does not mean the length of the transmitted beam. A RADAR signal's length is actually infinite. (It will travel forever unless it is stopped by some object that reflects or absorbs it). When we talk about beam range, however, we mean how far away a moving object can be and still be measured by the RADAR.

Target Sensitivity - determined by:

- composition of the target (metal, glass),
- shape of the target,
- energy received by the target (distance, size, location in beam).

Not all objects reflect RADAR energy equally well. Metal objects reflect the beam quite well. Glass and plastic objects allow most of the beam to pass right through them without reflection. Some other objects such as leaves, tall grass, etc., absorb a good deal of the RADAR energy that strikes them.

If the RADAR is to measure the speed of an object, it has to receive some minimum of energy from that object. For example, a motorcycle is relatively small and contains little metal in comparison to other vehicles. Therefore, motorcycles will reflect relatively little energy, so the RADAR will not measure its speed until it is quite close to the RADAR antenna. On the other hand, a tractor - trailer contains a great deal of metal mass and reflects a relatively large amount of energy. Therefore, we might be able to measure a tractor - trailer's speed even when it is far away from the antenna.

The shape of a vehicle or other object effects how much energy it reflects. If the surface is perpendicular to the beam, most of the energy will reflect right back toward the RADAR. If the surface is slanted, some of the reflected energy will head off into space and will not be returned. **Overhead 12** illustrates this phenomenon. Here we see two objects, a truck and a sports car, being struck by the RADAR beam. The truck has a large vertical surface

Notes Page

Beam Width

All radar operators should know how to calculate the beam width of the radar instruments they use. The formula is as follows:

BW = 2D (Tan ½ ø)

This formula is used to determine the radar's transmitted half-power point beam width.

Example

A K-Band radar has a 12 degree beam width. What is the half-power point beam width at a range of 500 feet?

$$BW = 2D \times \left(\frac{\text{Tan } 12 \text{ deg}_{ø}}{2}\right)$$

BW = 2 x 500 x (Tan 6 deg)

BW = 2 x 500 x .105

BW = 105 feet

range. In theory only vehicle A will produce a signal that is strong enough to be measuredby the RADAR; therefore, we will obtain an accurate measurement of vehicle A's speed. If we had instead adjusted the range to its maximum level, all three vehicles presumably would reflect back signals strong enough to be measured.

It might seem from this discussion that range setting provides the perfect solution to our target selectivity problems. Why not just set the range as short as possible (say only a few feet), to make sure that only one vehicle is ever "in range" at any given time? Then, there would never be any question about which target is the correct one, since we would have only one target at a time.

The problem with that idea is that it would not give us time to obtain the necessary information and evidence and to take the proper actions. If we set the range too short, vehicles will pass into and out of range in just a few seconds or fractions of a second. During that brief interval, it would be difficult for the RADAR to process and display a speed reading. Also, at very short ranges, the Cosine Angle Effect would tend to make the measured speeds much lower than the true speeds.

On the other hand, we certainly do not want to set-the range too long; this would increase the sensitivity and make the RADAR unit more susceptible to interference (as we will discuss later). We need to strike a reasonable balance in our range setting, so that we achieve a reasonable degree of target selectivity and also a reasonable lead time for apprehension. As a general rule, the appropriate beam range depends on the amount of vehicle bunching. If we are operating at locations where vehicles tend to travel clustered close to one another, relatively short range settings should be used to provide reasonable target selectivity. If, on the other hand, vehicles tend to be widely separated, a longer setting should be used.

It should be noted that some RADAR devices do not have range setting controls. This method of dealing with selectivity problems obviously cannot be used with those RADARS.

It is important to understand that a RADAR unit's range setting is approximate, not precise. Remember that what the range setting really does is to adjust the minimum signal strength to which the RADAR will respond. Most RADAR units are designed so that the average, standard - sired and standard - shaped automobile will reflect a RADAR signal of that particular strength when it is approximately at the selected range from the transmitter. Some larger vehicles might be able to send back a sufficiently strong signal even though they are at somewhat greater range. Some smaller vehicles will not reflect a signal that is strong enough to be measured until they are a good deal closer to the transmitter. So, when you adjust your RADAR's range setting, be aware that you will be able to measure some vehicles' speeds at longer ranges and that you will not be able to measure other vehicles' speeds until they are well within range. Your experience will teach you the effects of the range setting--sensitivity control.

range. In theory only vehicle A will produce a signal that is strong enough to be measuredby the RADAR; therefore, we will obtain an accurate measurement of vehicle A's speed. If we had instead adjusted the range to its maximum level, all three vehicles presumably would reflect back signals strong enough to be measured.

It might seem from this discussion that range setting provides the perfect solution to our target selectivity problems. Why not just set the range as short as possible (say only a few feet), to make sure that only one vehicle is ever "in range" at any given time? Then, there would never be any question about which target is the correct one, since we would have only one target at a time.

The problem with that idea is that it would not give us time to obtain the necessary information and evidence and to take the proper actions. If we set the range too short, vehicles will pass into and out of range in just a few seconds or fractions of a second. During that brief interval, it would be difficult for the RADAR to process and display a speed reading. Also, at very short ranges, the Cosine Angle Effect would tend to make the measured speeds much lower than the true speeds.

On the other hand, we certainly do not want to set-the range too long; this would increase the sensitivity and make the RADAR unit more susceptible to interference (as we will discuss later). We need to strike a reasonable balance in our range setting, so that we achieve a reasonable degree of target selectivity and also a reasonable lead time for apprehension. As a general rule, the appropriate beam range depends on the amount of vehicle bunching. If we are operating at locations where vehicles tend to travel clustered close to one another, relatively short range settings should be used to provide reasonable target selectivity. If, on the other hand, vehicles tend to be widely separated, a longer setting should be used.

It should be noted that some RADAR devices do not have range setting controls. This method of dealing with selectivity problems obviously cannot be used with those RADARS.

It is important to understand that a RADAR unit's range setting is approximate, not precise. Remember that what the range setting really does is to adjust the minimum signal strength to which the RADAR will respond. Most RADAR units are designed so that the average, standard - sired and standard - shaped automobile will reflect a RADAR signal of that particular strength when it is approximately at the selected range from the transmitter. Some larger vehicles might be able to send back a sufficiently strong signal even though they are at somewhat greater range. Some smaller vehicles will not reflect a signal that is strong enough to be measured until they are a good deal closer to the transmitter. So, when you adjust your RADAR's range setting, be aware that you will be able to measure some vehicles' speeds at longer ranges and that you will not be able to measure other vehicles' speeds until they are well within range. Your experience will teach you the effects of the range setting--sensitivity control.

range. In theory only vehicle A will produce a signal that is strong enough to be measuredby the RADAR; therefore, we will obtain an accurate measurement of vehicle A's speed. If we had instead adjusted the range to its maximum level, all three vehicles presumably would reflect back signals strong enough to be measured.

It might seem from this discussion that range setting provides the perfect solution to our target selectivity problems. Why not just set the range as short as possible (say only a few feet), to make sure that only one vehicle is ever "in range" at any given time? Then, there would never be any question about which target is the correct one, since we would have only one target at a time.

The problem with that idea is that it would not give us time to obtain the necessary information and evidence and to take the proper actions. If we set the range too short, vehicles will pass into and out of range in just a few seconds or fractions of a second. During that brief interval, it would be difficult for the RADAR to process and display a speed reading. Also, at very short ranges, the Cosine Angle Effect would tend to make the measured speeds much lower than the true speeds.

On the other hand, we certainly do not want to set-the range too long; this would increase the sensitivity and make the RADAR unit more susceptible to interference (as we will discuss later). We need to strike a reasonable balance in our range setting, so that we achieve a reasonable degree of target selectivity and also a reasonable lead time for apprehension. As a general rule, the appropriate beam range depends on the amount of vehicle bunching. If we are operating at locations where vehicles tend to travel clustered close to one another, relatively short range settings should be used to provide reasonable target selectivity. If, on the other hand, vehicles tend to be widely separated, a longer setting should be used.

It should be noted that some RADAR devices do not have range setting controls. This method of dealing with selectivity problems obviously cannot be used with those RADARS.

It is important to understand that a RADAR unit's range setting is approximate, not precise. Remember that what the range setting really does is to adjust the minimum signal strength to which the RADAR will respond. Most RADAR units are designed so that the average, standard - sired and standard - shaped automobile will reflect a RADAR signal of that particular strength when it is approximately at the selected range from the transmitter. Some larger vehicles might be able to send back a sufficiently strong signal even though they are at somewhat greater range. Some smaller vehicles will not reflect a signal that is strong enough to be measured until they are a good deal closer to the transmitter. So, when you adjust your RADAR's range setting, be aware that you will be able to measure some vehicles' speeds at longer ranges and that you will not be able to measure other vehicles' speeds until they are well within range. Your experience will teach you the effects of the range setting--sensitivity control.

Notes Page

The important thing to remember is if there is any doubt in your mind as to which target vehicle is being tracked, **Take No Enforcement Action!**

The biggest impediment to this method is the "locking" feature that most RADAR devices have. This feature allows the operator to press a button or pull a trigger and cause whatever speed measurement that is appearing at that instant to "lock" on the display. It may also stop the RADAR from transmitting. Many RADAR units have had an automatic locking feature which caused this "locking" to occur as soon as the speed measurement reached the level selected on the thumb wheel dials. **Units that have the automatic locking feature do not meet the NHTSA/IACP specifications for police radar units and are not eligible for purchase with Federal funds.**

The idea behind the locking feature is to "preserve the evidence" so that the operator does not have to look at the RADAR's display window or try to remember what the reading was. Whatever the merits of this idea might have been, "Locking" the speed measurement absolutely prevents us from observing the switch that might occur when the first vehicle passes out of the beam. Therefore, manual locking should not be used when facing a possible selectivity problem. The automatic locking feature should never be used for enforcement purposes.

Visual Speed Estimates

The most basic way to minimize target selectivity problems is to rely on your own ability to estimate vehicle speeds.

Experimental studies have shown that people can learn how to judge the speeds of vehicles quite accurately on the basis of their own visual and auditory observation. Traffic law enforcement officers in particular can become very proficient at estimating speeds because observing traffic is such a major part of their job. If you are not already proficient, you should practice by observing vehicles or by pacing to establish a vehicle's speed. When you are proficient, you can visually estimate the speed of every vehicle that you might suspect of exceeding the speed limit. You can compare your visual estimate with the speed measurement that you obtain from your RADAR device. If your estimate and the RADAR device agree reasonably well, you can be more confident that you obtained the measurement from the appropriate vehicle. If the RADAR measurement is significantly higher or lower than your own estimate, you should disregard the RADAR measurement. Then, of course, try to ascertain the cause of the inappropriate measurement, and move to another location to eliminate the cause if necessary.

The important thing to remember is if there is any doubt in your mind as to which target vehicle is being tracked, **Take No Enforcement Action!**

The biggest impediment to this method is the "locking" feature that most RADAR devices have. This feature allows the operator to press a button or pull a trigger and cause whatever speed measurement that is appearing at that instant to "lock" on the display. It may also stop the RADAR from transmitting. Many RADAR units have had an automatic locking feature which caused this "locking" to occur as soon as the speed measurement reached the level selected on the thumb wheel dials. **Units that have the automatic locking feature do not meet the NHTSA/IACP specifications for police radar units and are not eligible for purchase with Federal funds.**

The idea behind the locking feature is to "preserve the evidence" so that the operator does not have to look at the RADAR's display window or try to remember what the reading was. Whatever the merits of this idea might have been, "Locking" the speed measurement absolutely prevents us from observing the switch that might occur when the first vehicle passes out of the beam. Therefore, manual locking should not be used when facing a possible selectivity problem. The automatic locking feature should never be used for enforcement purposes.

Visual Speed Estimates

The most basic way to minimize target selectivity problems is to rely on your own ability to estimate vehicle speeds.

Experimental studies have shown that people can learn how to judge the speeds of vehicles quite accurately on the basis of their own visual and auditory observation. Traffic law enforcement officers in particular can become very proficient at estimating speeds because observing traffic is such a major part of their job. If you are not already proficient, you should practice by observing vehicles or by pacing to establish a vehicle's speed. When you are proficient, you can visually estimate the speed of every vehicle that you might suspect of exceeding the speed limit. You can compare your visual estimate with the speed measurement that you obtain from your RADAR device. If your estimate and the RADAR device agree reasonably well, you can be more confident that you obtained the measurement from the appropriate vehicle. If the RADAR measurement is significantly higher or lower than your own estimate, you should disregard the RADAR measurement. Then, of course, try to ascertain the cause of the inappropriate measurement, and move to another location to eliminate the cause if necessary.

The important thing to remember is if there is any doubt in your mind as to which target vehicle is being tracked, **Take No Enforcement Action!**

The biggest impediment to this method is the "locking" feature that most RADAR devices have. This feature allows the operator to press a button or pull a trigger and cause whatever speed measurement that is appearing at that instant to "lock" on the display. It may also stop the RADAR from transmitting. Many RADAR units have had an automatic locking feature which caused this "locking" to occur as soon as the speed measurement reached the level selected on the thumb wheel dials. **Units that have the automatic locking feature do not meet the NHTSA/IACP specifications for police radar units and are not eligible for purchase with Federal funds.**

The idea behind the locking feature is to "preserve the evidence" so that the operator does not have to look at the RADAR's display window or try to remember what the reading was. Whatever the merits of this idea might have been, "Locking" the speed measurement absolutely prevents us from observing the switch that might occur when the first vehicle passes out of the beam. Therefore, manual locking should not be used when facing a possible selectivity problem. The automatic locking feature should never be used for enforcement purposes.

Visual Speed Estimates

The most basic way to minimize target selectivity problems is to rely on your own ability to estimate vehicle speeds.

Experimental studies have shown that people can learn how to judge the speeds of vehicles quite accurately on the basis of their own visual and auditory observation. Traffic law enforcement officers in particular can become very proficient at estimating speeds because observing traffic is such a major part of their job. If you are not already proficient, you should practice by observing vehicles or by pacing to establish a vehicle's speed. When you are proficient, you can visually estimate the speed of every vehicle that you might suspect of exceeding the speed limit. You can compare your visual estimate with the speed measurement that you obtain from your RADAR device. If your estimate and the RADAR device agree reasonably well, you can be more confident that you obtained the measurement from the appropriate vehicle. If the RADAR measurement is significantly higher or lower than your own estimate, you should disregard the RADAR measurement. Then, of course, try to ascertain the cause of the inappropriate measurement, and move to another location to eliminate the cause if necessary.

Notes Page

eliminated by moving the antenna to the outside of the vehicle, weather permitting, or byturning the fan system off. Man-made objects give off frequency waves that can be measured by the RADAR as apparent vehicles. Fluorescent-lamps, neon signs, and similar devices are examples of objects that can create these false or ghost signals, as they are commonly called. Although their original frequencies are much different than a traffic RADAR, they create a phenomenon called “Harmonic Frequencies”. These harmonic frequencies were the cause of some of the more bizarre and highly publicized “inaccuracies” that surfaced in Dade County, and other places where RADAR has been challenged. The infamous "85 MPH tree” is a case in point: the news has been well circulated that a RADAR was pointed at a banyan tree and that a reading of approximately 85 MPH appeared on the display window. Not so widely reported was the fact that a CB radio transmitter, located in the same vehicle as the RADAR, was keyed and a reporter whistled into the microphone. Some of the radio signal sent out from the CB was picked up by the RADAR, and that caused the 85 MPH reading. It did not matter that the RADAR happened to be pointed toward the tree at the time; it could have been pointed at the ground, a house, the sky, or whatever. The actual source of the harmonic frequency was the CB, not the tree.

It might occur to you to wonder why a CB radio can interfere with a RADAR, and whether this is likely to be a common problem since so many cars are equipped with a CB radio. The fact is that a CB radio and a RADAR operate on very different frequencies. The operating frequency of any of the CB channels is about 27 megahertz (Million hertz). The x-band RADAR operates at approximately 10 gigahertz (10 Billion hertz). Any frequency that could interfere with RADAR operation will cause the Radio Interference light to be illuminated. Some RADAR units in the field do not have this capability so the operator must be aware that this can happen.

How can a RADAR possibly pick up a CB signal? Under ordinary circumstances, the RADAR will not pick up the CB Signal. But when the CB and the RADAR are extremely close together, harmonic interference can result. The problem is that the RADAR receiver is a broad-band device. If enough energy is present, even at far removed frequencies, the RADAR might “read” the interfering signal if there are no other stronger signals coming in.

Another well reported incident from the Dade County situation was the case of the so-called 28 MPH house. Here again, interference was the culprit. The RADAR was aimed at the house through the car’s front windshield. Some of the energy was deflected down from the windshield toward the defroster unit, which was on at the time. What the RADAR was actually measuring was the speed of the defroster fan.

Other types of interference are the scanning effect and the panning effect. The panning effect (self-interference) can occur when a stationary RADAR unit antenna is moved while a speed measurement is being made. For example, a hand-held RADAR moved swiftly

eliminated by moving the antenna to the outside of the vehicle, weather permitting, or byturning the fan system off. Man-made objects give off frequency waves that can be measured by the RADAR as apparent vehicles. Fluorescent-lamps, neon signs, and similar devices are examples of objects that can create these false or ghost signals, as they are commonly called. Although their original frequencies are much different than a traffic RADAR, they create a phenomenon called “Harmonic Frequencies”. These harmonic frequencies were the cause of some of the more bizarre and highly publicized “inaccuracies” that surfaced in Dade County, and other places where RADAR has been challenged. The infamous "85 MPH tree” is a case in point: the news has been well circulated that a RADAR was pointed at a banyan tree and that a reading of approximately 85 MPH appeared on the display window. Not so widely reported was the fact that a CB radio transmitter, located in the same vehicle as the RADAR, was keyed and a reporter whistled into the microphone. Some of the radio signal sent out from the CB was picked up by the RADAR, and that caused the 85 MPH reading. It did not matter that the RADAR happened to be pointed toward the tree at the time; it could have been pointed at the ground, a house, the sky, or whatever. The actual source of the harmonic frequency was the CB, not the tree.

It might occur to you to wonder why a CB radio can interfere with a RADAR, and whether this is likely to be a common problem since so many cars are equipped with a CB radio. The fact is that a CB radio and a RADAR operate on very different frequencies. The operating frequency of any of the CB channels is about 27 megahertz (Million hertz). The x-band RADAR operates at approximately 10 gigahertz (10 Billion hertz). Any frequency that could interfere with RADAR operation will cause the Radio Interference light to be illuminated. Some RADAR units in the field do not have this capability so the operator must be aware that this can happen.

How can a RADAR possibly pick up a CB signal? Under ordinary circumstances, the RADAR will not pick up the CB Signal. But when the CB and the RADAR are extremely close together, harmonic interference can result. The problem is that the RADAR receiver is a broad-band device. If enough energy is present, even at far removed frequencies, the RADAR might “read” the interfering signal if there are no other stronger signals coming in.

Another well reported incident from the Dade County situation was the case of the so-called 28 MPH house. Here again, interference was the culprit. The RADAR was aimed at the house through the car’s front windshield. Some of the energy was deflected down from the windshield toward the defroster unit, which was on at the time. What the RADAR was actually measuring was the speed of the defroster fan.

Other types of interference are the scanning effect and the panning effect. The panning effect (self-interference) can occur when a stationary RADAR unit antenna is moved while a speed measurement is being made. For example, a hand-held RADAR moved swiftly

eliminated by moving the antenna to the outside of the vehicle, weather permitting, or byturning the fan system off. Man-made objects give off frequency waves that can be measured by the RADAR as apparent vehicles. Fluorescent-lamps, neon signs, and similar devices are examples of objects that can create these false or ghost signals, as they are commonly called. Although their original frequencies are much different than a traffic RADAR, they create a phenomenon called “Harmonic Frequencies”. These harmonic frequencies were the cause of some of the more bizarre and highly publicized “inaccuracies” that surfaced in Dade County, and other places where RADAR has been challenged. The infamous "85 MPH tree” is a case in point: the news has been well circulated that a RADAR was pointed at a banyan tree and that a reading of approximately 85 MPH appeared on the display window. Not so widely reported was the fact that a CB radio transmitter, located in the same vehicle as the RADAR, was keyed and a reporter whistled into the microphone. Some of the radio signal sent out from the CB was picked up by the RADAR, and that caused the 85 MPH reading. It did not matter that the RADAR happened to be pointed toward the tree at the time; it could have been pointed at the ground, a house, the sky, or whatever. The actual source of the harmonic frequency was the CB, not the tree.

It might occur to you to wonder why a CB radio can interfere with a RADAR, and whether this is likely to be a common problem since so many cars are equipped with a CB radio. The fact is that a CB radio and a RADAR operate on very different frequencies. The operating frequency of any of the CB channels is about 27 megahertz (Million hertz). The x-band RADAR operates at approximately 10 gigahertz (10 Billion hertz). Any frequency that could interfere with RADAR operation will cause the Radio Interference light to be illuminated. Some RADAR units in the field do not have this capability so the operator must be aware that this can happen.

How can a RADAR possibly pick up a CB signal? Under ordinary circumstances, the RADAR will not pick up the CB Signal. But when the CB and the RADAR are extremely close together, harmonic interference can result. The problem is that the RADAR receiver is a broad-band device. If enough energy is present, even at far removed frequencies, the RADAR might “read” the interfering signal if there are no other stronger signals coming in.

Another well reported incident from the Dade County situation was the case of the so-called 28 MPH house. Here again, interference was the culprit. The RADAR was aimed at the house through the car’s front windshield. Some of the energy was deflected down from the windshield toward the defroster unit, which was on at the time. What the RADAR was actually measuring was the speed of the defroster fan.

Other types of interference are the scanning effect and the panning effect. The panning effect (self-interference) can occur when a stationary RADAR unit antenna is moved while a speed measurement is being made. For example, a hand-held RADAR moved swiftly

Notes Page

They do not effect the RADAR or the quality of its readings.

Detection - There are many methods used by speed violators to obtain advance warning of the presence of police RADAR:

- Headlight flashing
- CB radio
- Homemade signs
- Radar detecting devices

A currently popular method of obtaining advanced warning about RADAR is from a RADAR detector. These devices are nothing more than Radar receivers designed to give off an audible and/or visible signal when exposed to a sufficiently strong RADAR beam. Detectors have been on the market since 1962. Early models generally were ineffective and suffered frequently from false alarms. However, recent improvements in this type of device make them able to detect RADAR transmitters while still out of range of speed measurement. With these improvements, there have been an increase in the number of drivers who use these detectors.

The experience of recent years proves that it is possible to do a very effective job in speed enforcement despite the attempts by some segments of the driving public to thwart our efforts.

Principles of Moving RADAR

In all of our discussions and illustrations so far, we have focused primarily on RADAR devices that remain stationary at all times. Recently, there has been a growing use of more advanced speed measuring RADAR, capable of operation from a moving patrol car.

The most important thing to remember about a moving RADAR is that it uses its beam to measure two different speeds:

- The speed of the target vehicle relative to the patrol vehicle (Closing or combined speed).

- The speed of the patrol vehicle relative to the ground (Patrol speed). The phrase "speed relative to ground speed" needs to be understood. Example: The patrol vehicle is traveling northbound at 50 MPH, while the target vehicle is traveling southbound at 70 MPH. The two vehicles 'are closing on one another at a combined speed of 120 MPH. What is the importance of this "relative speed"? The amount of the Doppler shift will depend upon the relative speed. The speed of the total relative motion between the patrol car and the target vehicle is 120 MPH.

They do not effect the RADAR or the quality of its readings.

Detection - There are many methods used by speed violators to obtain advance warning of the presence of police RADAR:

- Headlight flashing
- CB radio
- Homemade signs
- Radar detecting devices

A currently popular method of obtaining advanced warning about RADAR is from a RADAR detector. These devices are nothing more than Radar receivers designed to give off an audible and/or visible signal when exposed to a sufficiently strong RADAR beam. Detectors have been on the market since 1962. Early models generally were ineffective and suffered frequently from false alarms. However, recent improvements in this type of device make them able to detect RADAR transmitters while still out of range of speed measurement. With these improvements, there have been an increase in the number of drivers who use these detectors.

The experience of recent years proves that it is possible to do a very effective job in speed enforcement despite the attempts by some segments of the driving public to thwart our efforts.

Principles of Moving RADAR

In all of our discussions and illustrations so far, we have focused primarily on RADAR devices that remain stationary at all times. Recently, there has been a growing use of more advanced speed measuring RADAR, capable of operation from a moving patrol car.

The most important thing to remember about a moving RADAR is that it uses its beam to measure two different speeds:

- The speed of the target vehicle relative to the patrol vehicle (Closing or combined speed).

- The speed of the patrol vehicle relative to the ground (Patrol speed). The phrase "speed relative to ground speed" needs to be understood. Example: The patrol vehicle is traveling northbound at 50 MPH, while the target vehicle is traveling southbound at 70 MPH. The two vehicles 'are closing on one another at a combined speed of 120 MPH. What is the importance of this "relative speed"? The amount of the Doppler shift will depend upon the relative speed. The speed of the total relative motion between the patrol car and the target vehicle is 120 MPH.

They do not effect the RADAR or the quality of its readings.

Detection - There are many methods used by speed violators to obtain advance warning of the presence of police RADAR:

- Headlight flashing
- CB radio
- Homemade signs
- Radar detecting devices

A currently popular method of obtaining advanced warning about RADAR is from a RADAR detector. These devices are nothing more than Radar receivers designed to give off an audible and/or visible signal when exposed to a sufficiently strong RADAR beam. Detectors have been on the market since 1962. Early models generally were ineffective and suffered frequently from false alarms. However, recent improvements in this type of device make them able to detect RADAR transmitters while still out of range of speed measurement. With these improvements, there have been an increase in the number of drivers who use these detectors.

The experience of recent years proves that it is possible to do a very effective job in speed enforcement despite the attempts by some segments of the driving public to thwart our efforts.

Principles of Moving RADAR

In all of our discussions and illustrations so far, we have focused primarily on RADAR devices that remain stationary at all times. Recently, there has been a growing use of more advanced speed measuring RADAR, capable of operation from a moving patrol car.

The most important thing to remember about a moving RADAR is that it uses its beam to measure two different speeds:

- The speed of the target vehicle relative to the patrol vehicle (Closing or combined speed).

- The speed of the patrol vehicle relative to the ground (Patrol speed). The phrase "speed relative to ground speed" needs to be understood. Example: The patrol vehicle is traveling northbound at 50 MPH, while the target vehicle is traveling southbound at 70 MPH. The two vehicles 'are closing on one another at a combined speed of 120 MPH. What is the importance of this "relative speed"? The amount of the Doppler shift will depend upon the relative speed. The speed of the total relative motion between the patrol car and the target vehicle is 120 MPH.

Notes Page

reflected signal that the RADAR "thinks" is coming from the ground would actually be coming from the object that is off at some angle from the patrol car. Because of the Cosine Angle Effect, the relative motion between the patrol car and the roadside object would not reflected signal that the RADAR "thinks" is coming from the ground would actually be coming from the object that is off at some angle from the patrol car. Because of the Cosine Angle Effect, the relative motion between the patrol car and the roadside object would notbe computed to be as fast as the patrol car's true speed. Therefore, the patrol speed measurement would be low. If we get a low patrol speed measurement, the calculation of the target speed would be erroneously high. (Overhead 16)

This problem can also arise if the moving RADAR antenna is not aimed properly. The antenna should be aimed as close to parallel with the direction that the patrol car is traveling as possible.

If the moving RADAR is not aimed properly, this Cosine Angle Effect will also produce a low patrol speed measurement.

For example, suppose the target vehicle's true speed is 55 MPH, and the patrol vehicle's true speed is 50 MPH. Then, the true closing speed between the two vehicles would be 105 MPH. But, now, suppose the Cosine Angle Effect produces a low patrol speed measurement, instead of 50 MPH, the Cosine Angle Effect gives us an apparent patrol speed of only 48 MPH. In this case, the computation would be:

TS = CS - PS
TS = 105 - 48
TS = 57 MPH - (true speed 55 MPH)

Our target speed result would be 2 MPH higher than the target's true speed, and could be higher if the patrol speed is lower. But, the angular effect does not always produce speed measurements that lead to high results. Sometimes the Cosine Angle Effect will produce low closing speed measurements; that in turn could lead to low target speed calculation. The point is, the Cosine Angle Effect can work either way when moving RADAR is involved. Obviously, we must be more concerned with the possibility that Cosine Angle Effect will produce low patrol speed measurements and thereby give higher - than - true target speeds. To guard against that, you should make sure that your moving RADAR antenna is always aimed in the direction of the patrol cars motion as closely as possible.

This will help to ensure that we obtain reflected signals from the ground, and not from roadside objects that are off at some angle. In addition, you should closely monitor your patrol speed and obtain a "tracking history" on the target vehicle before taking enforcement action.

reflected signal that the RADAR "thinks" is coming from the ground would actually be coming from the object that is off at some angle from the patrol car. Because of the Cosine Angle Effect, the relative motion between the patrol car and the roadside object would not reflected signal that the RADAR "thinks" is coming from the ground would actually be coming from the object that is off at some angle from the patrol car. Because of the Cosine Angle Effect, the relative motion between the patrol car and the roadside object would notbe computed to be as fast as the patrol car's true speed. Therefore, the patrol speed measurement would be low. If we get a low patrol speed measurement, the calculation of the target speed would be erroneously high. (Overhead 16)

This problem can also arise if the moving RADAR antenna is not aimed properly. The antenna should be aimed as close to parallel with the direction that the patrol car is traveling as possible.

If the moving RADAR is not aimed properly, this Cosine Angle Effect will also produce a low patrol speed measurement.

For example, suppose the target vehicle's true speed is 55 MPH, and the patrol vehicle's true speed is 50 MPH. Then, the true closing speed between the two vehicles would be 105 MPH. But, now, suppose the Cosine Angle Effect produces a low patrol speed measurement, instead of 50 MPH, the Cosine Angle Effect gives us an apparent patrol speed of only 48 MPH. In this case, the computation would be:

TS = CS - PS
TS = 105 - 48
TS = 57 MPH - (true speed 55 MPH)

Our target speed result would be 2 MPH higher than the target's true speed, and could be higher if the patrol speed is lower. But, the angular effect does not always produce speed measurements that lead to high results. Sometimes the Cosine Angle Effect will produce low closing speed measurements; that in turn could lead to low target speed calculation. The point is, the Cosine Angle Effect can work either way when moving RADAR is involved. Obviously, we must be more concerned with the possibility that Cosine Angle Effect will produce low patrol speed measurements and thereby give higher - than - true target speeds. To guard against that, you should make sure that your moving RADAR antenna is always aimed in the direction of the patrol cars motion as closely as possible.

This will help to ensure that we obtain reflected signals from the ground, and not from roadside objects that are off at some angle. In addition, you should closely monitor your patrol speed and obtain a "tracking history" on the target vehicle before taking enforcement action.

Patrol Speed Shadowing - You should also be aware that moving RADAR may be susceptible to some special problems that do not effect stationary RADAR. One of these problems is known as the shadowing effect. Like the Cosine Angle Effect, it can produce a lower than actual patrol speed measurement, and can lead to a higher than target speed calculation. See Overhead 17, which illustrates the shadowing effect. There is a large truck moving ahead of the patrol vehicle. The RADAR beam that we intended to strike the ground is striking the truck and the truck reflects a stronger signal than the ground. (Remember, the truck is large, metallic and close to the patrol vehicle and thus is an efficient reflector.) So, the RADAR uses the signal reflected from the truck and indicates a lower than actual patrol speed. For example, if the patrol car is moving at 50 MPH and the truck at 35 MPH, the speed of the patrol car relative to the truck is only 15 MPH. The moving RADAR would mistakenly measure the patrol car's speed at 15 MPH.

Meanwhile, what is happening with the RADAR beam that is striking the target vehicle? It is continuing to undergo a Doppler shift caused by the combined speeds of the target vehicle and the patrol car, and so the RADAR measures this combined speed (110 MPH, as we indicated in the earlier example). Now the computer goes into action:

Target Speed = Combined Speed - Patrol Speed

(TS) 95 MPH = (CS) 110 MPH - (PS) 15 MPH

But the computer believes that PS (patrol speed) is only 15 MPH. So, as far as it is concerned, the target is traveling at 95 MPH (110 minus 15). Obviously, this is a very large deviation from the target's actual speed of 60 MPH. Even worse, the deviation is not in the suspect's favor. Fortunately, this type of problem does not occur often. Usually, the signal reflected back from the ground is stronger than that reflected back from roadside objects or from other vehicles in the patrol car's lane. If the situation does occur, it can be easily detected by monitoring your patrol speed. This problem can be avoided by obtaining a proper tracking history before taking enforcement action.

Sign Shot Reflections - Under some circumstances, the moving RADAR will read its own speed in the target window. This occurs when approaching overpasses, and in particular, overhead signs of the type often seen along interstate routes. The RADAR signal reflects from the sign or other large stationary object alongside the road back to the patrol vehicle or possibly another vehicle near it when it is once again reflected back to the sign and returned to the patrol car. At each one of these reflections, the signal undergoes a Doppler shift. It is noted that such readings normally persist for only a short time and with the development of a proper target history may pose little or no problem.

On a two window RADAR be suspicious of any reading that is repeated within one or two miles per hour of each other in both target and patrol windows. Look for physical

Patrol Speed Shadowing - You should also be aware that moving RADAR may be susceptible to some special problems that do not effect stationary RADAR. One of these problems is known as the shadowing effect. Like the Cosine Angle Effect, it can produce a lower than actual patrol speed measurement, and can lead to a higher than target speed calculation. See Overhead 17, which illustrates the shadowing effect. There is a large truck moving ahead of the patrol vehicle. The RADAR beam that we intended to strike the ground is striking the truck and the truck reflects a stronger signal than the ground. (Remember, the truck is large, metallic and close to the patrol vehicle and thus is an efficient reflector.) So, the RADAR uses the signal reflected from the truck and indicates a lower than actual patrol speed. For example, if the patrol car is moving at 50 MPH and the truck at 35 MPH, the speed of the patrol car relative to the truck is only 15 MPH. The moving RADAR would mistakenly measure the patrol car's speed at 15 MPH.

Meanwhile, what is happening with the RADAR beam that is striking the target vehicle? It is continuing to undergo a Doppler shift caused by the combined speeds of the target vehicle and the patrol car, and so the RADAR measures this combined speed (110 MPH, as we indicated in the earlier example). Now the computer goes into action:

Target Speed = Combined Speed - Patrol Speed

(TS) 95 MPH = (CS) 110 MPH - (PS) 15 MPH

But the computer believes that PS (patrol speed) is only 15 MPH. So, as far as it is concerned, the target is traveling at 95 MPH (110 minus 15). Obviously, this is a very large deviation from the target's actual speed of 60 MPH. Even worse, the deviation is not in the suspect's favor. Fortunately, this type of problem does not occur often. Usually, the signal reflected back from the ground is stronger than that reflected back from roadside objects or from other vehicles in the patrol car's lane. If the situation does occur, it can be easily detected by monitoring your patrol speed. This problem can be avoided by obtaining a proper tracking history before taking enforcement action.

Sign Shot Reflections - Under some circumstances, the moving RADAR will read its own speed in the target window. This occurs when approaching overpasses, and in particular, overhead signs of the type often seen along interstate routes. The RADAR signal reflects from the sign or other large stationary object alongside the road back to the patrol vehicle or possibly another vehicle near it when it is once again reflected back to the sign and returned to the patrol car. At each one of these reflections, the signal undergoes a Doppler shift. It is noted that such readings normally persist for only a short time and with the development of a proper target history may pose little or no problem.

On a two window RADAR be suspicious of any reading that is repeated within one or two miles per hour of each other in both target and patrol windows. Look for physical

characteristics that cause reflection and allow the patrol vehicle to decelerate slowly to another speed. Then, observe your readings. Visual estimates of target vehicle speed assist with possible selectivity problems.

Batching - Another special problem that only applies to moving RADAR is known as the batching effect. This is caused by slight time lags in the moving RADAR's sensing/computing cycle. Like the Cosine Angle Effect, batching can lead to either a low or high target speed result, depending upon the exact circumstances.

The batching effect might occur if the patrol car is substantially changing its speed (i.e., rapidly accelerating or decelerating) while the RADAR speed measurements are being made. In simple terms, the computer may not be able to keep up with these drastic speed changes. Instead of using the actual patrol speed at the instant that the closing speed is measured, the computer may use the speed that the patrol car was traveling a few fractions of a second earlier. If the patrol car is rapidly accelerating; then its earlier speed was lower than its present speed, and the target speed may be higher than the target's true speed. If the patrol car is rapidly decelerating; then its speed a fraction of a second ago was higher than its present speed, and the target speed calculation may be lower than the true speed. The batching effect can be avoided by maintaining a relatively steady speed when taking speed measurements and by monitoring your patrol speed.

Summary

The moving RADAR Cosine Angle Effect, shadowing effect, reflections and batching effect are particularly significant because they might lead us to believe that a vehicle is traveling faster than it really is. We need to do everything possible can avoid these effects. Keep the patrol car's speed reasonably steady to eliminate batching. Aim the moving RADARS antenna as closely as possible to the patrol car's direction of travel. Keep a large distance between the patrol car and other vehicles that could cause the shadowing effect. Be aware that it is usually not advisable to conduct moving RADAR operation in congested traffic where selectivity problems and shadowing are most likely to occur, or where there are many reflective objects alongside the road. In all cases where we use moving RADAR, you must verify that the RADAR and speedometer agree on the patrol speed, before-accepting the target speed result as valid.

Technical Notations

Anti-Detector Switch Power Surge - There have been claims that a power surge occurs when the RADAR unit is first switched on from the hold switch position and that this power surge will result in inaccurate and supposedly high target readings. Recent tests conducted by the National Highway Traffic Safety Administration (NHTSA) indicated that no false readings were noted during their tests. In digital type RADAR, the verification circuitry prohibits the RADAR reading from being displayed until a sampling is done over a period of time sufficient to analyze the signal to make certain that it is a Doppler signal rather

characteristics that cause reflection and allow the patrol vehicle to decelerate slowly to another speed. Then, observe your readings. Visual estimates of target vehicle speed assist with possible selectivity problems.

Batching - Another special problem that only applies to moving RADAR is known as the batching effect. This is caused by slight time lags in the moving RADAR's sensing/computing cycle. Like the Cosine Angle Effect, batching can lead to either a low or high target speed result, depending upon the exact circumstances.

The batching effect might occur if the patrol car is substantially changing its speed (i.e., rapidly accelerating or decelerating) while the RADAR speed measurements are being made. In simple terms, the computer may not be able to keep up with these drastic speed changes. Instead of using the actual patrol speed at the instant that the closing speed is measured, the computer may use the speed that the patrol car was traveling a few fractions of a second earlier. If the patrol car is rapidly accelerating; then its earlier speed was lower than its present speed, and the target speed may be higher than the target's true speed. If the patrol car is rapidly decelerating; then its speed a fraction of a second ago was higher than its present speed, and the target speed calculation may be lower than the true speed. The batching effect can be avoided by maintaining a relatively steady speed when taking speed measurements and by monitoring your patrol speed.

Summary

The moving RADAR Cosine Angle Effect, shadowing effect, reflections and batching effect are particularly significant because they might lead us to believe that a vehicle is traveling faster than it really is. We need to do everything possible can avoid these effects. Keep the patrol car's speed reasonably steady to eliminate batching. Aim the moving RADARS antenna as closely as possible to the patrol car's direction of travel. Keep a large distance between the patrol car and other vehicles that could cause the shadowing effect. Be aware that it is usually not advisable to conduct moving RADAR operation in congested traffic where selectivity problems and shadowing are most likely to occur, or where there are many reflective objects alongside the road. In all cases where we use moving RADAR, you must verify that the RADAR and speedometer agree on the patrol speed, before-accepting the target speed result as valid.

Technical Notations

Anti-Detector Switch Power Surge - There have been claims that a power surge occurs when the RADAR unit is first switched on from the hold switch position and that this power surge will result in inaccurate and supposedly high target readings. Recent tests conducted by the National Highway Traffic Safety Administration (NHTSA) indicated that no false readings were noted during their tests. In digital type RADAR, the verification circuitry prohibits the RADAR reading from being displayed until a sampling is done over a period of time sufficient to analyze the signal to make certain that it is a Doppler signal rather

than electrical noise. This precludes the RADAR from reading a high number, or any number in fact, until the signal is stabilized. The anti-detector switch effect is not a factor in modern RADAR operation, but it is emphasized that the target should be observed for a period of time prior to the reading being obtained and sufficient information should be obtained to develop adequate target history to support any alleged violation.

Heat Buildup - There have been claims that RADAR unit operation has been adversely effected by extreme high temperature. NHTSA conducted tests on seven RADAR units from various manufacturers and operated the units at a temperature of 60 degrees centigrade (104 degrees fahrenheit) under laboratory conditions. None of the RADAR units were significantly effected by the heat build-up during this test. For example, the worse condition that was experienced by a test RADAR unit produced a change in speed of only 19,000ths of a mile per hour.

Temperature characteristics as they effect the tuning forks and their accuracy has also been a matter of concern in the past. The tuning fork is tested for accuracy at 68 degrees fahrenheit (20 degrees centigrade). At temperatures above and below 68 degrees fahrenheit, the fork will not produce the exact specified frequency but the amount of change is insignificant. For example, in a temperature range from -22 degrees to + 140 fahrenheit, the total frequency alteration of a tuning fork will cause a deviation of 1.3 MPH.

When viewed from the 68 degrees fahrenheit as a median temperature, the variation is approximately 6/10ths of a mile per hour error in the upper range and 7/10ths of a mile per hour in the lower range, neither of which is large enough to be read by the RADAR unit.

Power Source Requirements - The power source requirements for the typical RADAR unit varies from 11 to 15 volts direct current (DC) with an amperage flow of 1.8 amp. maximum. It is recommended that an auxiliary cigarette lighter receptacle be mounted under the dash and connected directly to the battery with a shielded cable. This is necessary to filter out possible ignition system interference within the patrol car. It is also acceptable to operate these units with a 12 volt Ni-Cad battery pack.

Device Licensing Requirements - Prior to 1983, radar speed measurement devices were required to be separately licensed by the Federal Communications Commission. The FCC has since amended its rules and eliminated the separate licensing requirement. Radar units are now operated under the license of the base/mobile communications system. Licensees are required to provide the FCC with a record of the radar units in use, the number of such units and the frequency on which they operate.

FCC rules governing radar operators have not changed. There is no licensing requirement for operators of speed measurement devices.

than electrical noise. This precludes the RADAR from reading a high number, or any number in fact, until the signal is stabilized. The anti-detector switch effect is not a factor in modern RADAR operation, but it is emphasized that the target should be observed for a period of time prior to the reading being obtained and sufficient information should be obtained to develop adequate target history to support any alleged violation.

Heat Buildup - There have been claims that RADAR unit operation has been adversely effected by extreme high temperature. NHTSA conducted tests on seven RADAR units from various manufacturers and operated the units at a temperature of 60 degrees centigrade (104 degrees fahrenheit) under laboratory conditions. None of the RADAR units were significantly effected by the heat build-up during this test. For example, the worse condition that was experienced by a test RADAR unit produced a change in speed of only 19,000ths of a mile per hour.

Temperature characteristics as they effect the tuning forks and their accuracy has also been a matter of concern in the past. The tuning fork is tested for accuracy at 68 degrees fahrenheit (20 degrees centigrade). At temperatures above and below 68 degrees fahrenheit, the fork will not produce the exact specified frequency but the amount of change is insignificant. For example, in a temperature range from -22 degrees to + 140 fahrenheit, the total frequency alteration of a tuning fork will cause a deviation of 1.3 MPH.

When viewed from the 68 degrees fahrenheit as a median temperature, the variation is approximately 6/10ths of a mile per hour error in the upper range and 7/10ths of a mile per hour in the lower range, neither of which is large enough to be read by the RADAR unit.

Power Source Requirements - The power source requirements for the typical RADAR unit varies from 11 to 15 volts direct current (DC) with an amperage flow of 1.8 amp. maximum. It is recommended that an auxiliary cigarette lighter receptacle be mounted under the dash and connected directly to the battery with a shielded cable. This is necessary to filter out possible ignition system interference within the patrol car. It is also acceptable to operate these units with a 12 volt Ni-Cad battery pack.

Device Licensing Requirements - Prior to 1983, radar speed measurement devices were required to be separately licensed by the Federal Communications Commission. The FCC has since amended its rules and eliminated the separate licensing requirement. Radar units are now operated under the license of the base/mobile communications system. Licensees are required to provide the FCC with a record of the radar units in use, the number of such units and the frequency on which they operate.

FCC rules governing radar operators have not changed. There is no licensing requirement for operators of speed measurement devices.

The Doppler Shift - As stated earlier in this chapter, the Doppler Shift is the difference between the transmitted and reflected frequency. For X band radar in order for the radar to display a speed measurement of one m.p.h. a shift of 31.4 Hz is needed. For K band radar a shift of 72.023 Hz is needed, in Ka band a shift of about 99 Hz is required.

The Doppler Shift - As stated earlier in this chapter, the Doppler Shift is the difference between the transmitted and reflected frequency. For X band radar in order for the radar to display a speed measurement of one m.p.h. a shift of 31.4 Hz is needed. For K band radar a shift of 72.023 Hz is needed, in Ka band a shift of about 99 Hz is required.

RADAR Assembly - The RADAR will be assembled following the A - B - C method. The RADAR operator will:

- connect the Antenna and Accessories (hand held remotes, ECM's, etc.) to the control Box, then,
- connect the control box to the power source (Current).

The RADAR operator should ensure that the RADAR's power control switch is in the "off' position prior to connecting the control box to the power source.

Installation Considerations - The RADAR device should be installed in the patrol vehicle following the manufacturer's recommended installation procedures. The design of a specific RADAR device, and its components, will dictate the requirements for installation.

Single-component RADAR devices - These devices may be either hand-held or mounted within the patrol vehicle. If the specific RADAR device is hand-held, the patrol vehicle should be equipped with a bracket or holster that allows the RADAR operator to secure the RADAR when the patrol vehicle is in motion. Single-component RADAR devices that are mounted within the patrol vehicle should:

- Not restrict the operator's:
  - field of vision when the patrol vehicle is in motion,
  - physical movement within the patrol vehicle, or
  - ability to quickly enter or exit the patrol vehicle in case of an emergency.
- Allow the RADAR operator easy access to the RADAR's controls.
- Allow the RADAR operator unrestricted visibility of the RADAR device's displays.

Multiple-component RADAR Devices - These devices may be either hand-held, mounted, or a combination of hand-held and mounted within the patrol vehicle. If the specific RADAR device consist of any hand-held components, the patrol vehicle should be equipped with a bracket or holster that allows the RADAR operator to secure the RADAR device's hand-held component when the patrol vehicle is in motion. Each component of the multiple-component RADAR device that is mounted within the patrol vehicle should:

- Not restrict the operator's:
  - field of vision when the patrol vehicle is in motion,
  - physical movement within the patrol vehicle, or
  - ability to quickly enter or exit the patrol vehicle in case of an emergency.

RADAR Assembly - The RADAR will be assembled following the A - B - C method. The RADAR operator will:

- connect the Antenna and Accessories (hand held remotes, ECM's, etc.) to the control Box, then,
- connect the control box to the power source (Current).

The RADAR operator should ensure that the RADAR's power control switch is in the "off' position prior to connecting the control box to the power source.

Installation Considerations - The RADAR device should be installed in the patrol vehicle following the manufacturer's recommended installation procedures. The design of a specific RADAR device, and its components, will dictate the requirements for installation.

Single-component RADAR devices - These devices may be either hand-held or mounted within the patrol vehicle. If the specific RADAR device is hand-held, the patrol vehicle should be equipped with a bracket or holster that allows the RADAR operator to secure the RADAR when the patrol vehicle is in motion. Single-component RADAR devices that are mounted within the patrol vehicle should:

- Not restrict the operator's:
  - field of vision when the patrol vehicle is in motion,
  - physical movement within the patrol vehicle, or
  - ability to quickly enter or exit the patrol vehicle in case of an emergency.
- Allow the RADAR operator easy access to the RADAR's controls.
- Allow the RADAR operator unrestricted visibility of the RADAR device's displays.

Multiple-component RADAR Devices - These devices may be either hand-held, mounted, or a combination of hand-held and mounted within the patrol vehicle. If the specific RADAR device consist of any hand-held components, the patrol vehicle should be equipped with a bracket or holster that allows the RADAR operator to secure the RADAR device's hand-held component when the patrol vehicle is in motion. Each component of the multiple-component RADAR device that is mounted within the patrol vehicle should:

- Not restrict the operator's:
  - field of vision when the patrol vehicle is in motion,
  - physical movement within the patrol vehicle, or
  - ability to quickly enter or exit the patrol vehicle in case of an emergency.

- Allow the RADAR operator easy access to the RADAR's controls.

- Allow the RADAR operator unrestricted visibility of the RADAR's displays.

Antenna- At all times, the RADAR operator should avoid mounting and/or aiming the RADAR device's antenna directly toward:

- occupants of the vehicle
- the RADAR's control box (may produce the scanning effect), or,
- nearby large metallic surfaces (may damage the RADAR's antenna receiver after a prolonged period of time).

The RADAR should be installed securely within the patrol vehicle to prevent occupant injury in the event of a collision. If the patrol vehicle is equipped with air-bags, the operator must ensure, during installation, that no component(s) of the RADAR speed measuring device will interfere with the deployment of the air-bags. At no time should a patrol vehicle be placed in motion prior to properly securing the RADAR and its components. The following situations are examples of failing to properly secure RADAR devices, or components of the RADAR devices:

- single component hand-held RADAR placed on the seat while attempting to overtake a violator,

- a RADAR's control box component being operated on the patrol vehicle's dash board while simply wedged between the dash and windshield,

- operating the patrol vehicle while a component of the RADAR is placed in the patrol vehicle operator's lap.

RADAR Device Accuracy Checks

After the RADAR device is assembled and installed, the RADAR operator should perform all required accuracy checks prior to beginning enforcement operations.

- Allow the RADAR operator easy access to the RADAR's controls.

- Allow the RADAR operator unrestricted visibility of the RADAR's displays.

Antenna- At all times, the RADAR operator should avoid mounting and/or aiming the RADAR device's antenna directly toward:

- occupants of the vehicle
- the RADAR's control box (may produce the scanning effect), or,
- nearby large metallic surfaces (may damage the RADAR's antenna receiver after a prolonged period of time).

The RADAR should be installed securely within the patrol vehicle to prevent occupant injury in the event of a collision. If the patrol vehicle is equipped with air-bags, the operator must ensure, during installation, that no component(s) of the RADAR speed measuring device will interfere with the deployment of the air-bags. At no time should a patrol vehicle be placed in motion prior to properly securing the RADAR and its components. The following situations are examples of failing to properly secure RADAR devices, or components of the RADAR devices:

- single component hand-held RADAR placed on the seat while attempting to overtake a violator,

- a RADAR's control box component being operated on the patrol vehicle's dash board while simply wedged between the dash and windshield,

- operating the patrol vehicle while a component of the RADAR is placed in the patrol vehicle operator's lap.

RADAR Device Accuracy Checks

After the RADAR device is assembled and installed, the RADAR operator should perform all required accuracy checks prior to beginning enforcement operations.

Internal accuracy checks:

Light- the RADAR operator will perform a light test to ensure that all the individual light segments are functioning properly. If any RADAR device fails to perform the light test as described in the manufacturers' specifications or if any lighting segment is not functioning properly, the RADAR should be removed from service until repaired.

Internal circuit check - the RADAR operator will perform an internal circuit check to test the counting units located inside the control box. It should be noted that this accuracy check only tests the control box and not the antenna. If the RADAR fails to perform the internal circuit check as required by manufacture specifications, the RADAR device should be removed from service until repaired.

External accuracy checks:

Tuning fork test - the RADAR operator will utilize tuning fork(s) to test the RADAR device's ability to process and display a known simulated target speed. The tuning fork(s) must be designated for the same frequency as the RADAR device in use.

a. Stationary mode - with the RADAR device in the stationary mode of operation, the RADAR operator will strike and place a certified tuning fork in front of the RADAR device's antenna. The RADAR device must display, within ± 1 mph, the certified value of the tuning fork in the target speed display window.

b. Moving mode - with the RADAR device in the moving mode of operation, the RADAR operator will strike and place two certified tuning forks of different values in front of the RADAR's antenna. The RADAR device must display, within ± 1 mph, the lower certified value of two tuning forks in the patrol speed display window, and the difference, within ± 1 mph, between the certified values of the two tuning forks in the target speed display window.

~~Vehicle speed verification test~~ - the RADAR operator can compare the RADAR device with a calibrated speedometer. This test will be performed as follows:

a. Stationary mode - with the RADAR device in the stationary mode of operation, the antenna should be aimed forward in a moving vehicle (without approaching traffic) and the value displayed in the target speed display window should be compared against the calibrated speedometer.

b. Moving mode - with the RADAR device in the moving mode of operation, the RADAR operator should compare the value displayed in the patrol speed display window against the calibrated speedometer.

Internal accuracy checks:

Light- the RADAR operator will perform a light test to ensure that all the individual light segments are functioning properly. If any RADAR device fails to perform the light test as described in the manufacturers' specifications or if any lighting segment is not functioning properly, the RADAR should be removed from service until repaired.

Internal circuit check - the RADAR operator will perform an internal circuit check to test the counting units located inside the control box. It should be noted that this accuracy check only tests the control box and not the antenna. If the RADAR fails to perform the internal circuit check as required by manufacture specifications, the RADAR device should be removed from service until repaired.

External accuracy checks:

Tuning fork test - the RADAR operator will utilize tuning fork(s) to test the RADAR device's ability to process and display a known simulated target speed. The tuning fork(s) must be designated for the same frequency as the RADAR device in use.

a. Stationary mode - with the RADAR device in the stationary mode of operation, the RADAR operator will strike and place a certified tuning fork in front of the RADAR device's antenna. The RADAR device must display, within ± 1 mph, the certified value of the tuning fork in the target speed display window.

b. Moving mode - with the RADAR device in the moving mode of operation, the RADAR operator will strike and place two certified tuning forks of different values in front of the RADAR's antenna. The RADAR device must display, within ± 1 mph, the lower certified value of two tuning forks in the patrol speed display window, and the difference, within ± 1 mph, between the certified values of the two tuning forks in the target speed display window.

~~Vehicle speed verification test~~ - the RADAR operator can compare the RADAR device with a calibrated speedometer. This test will be performed as follows:

a. Stationary mode - with the RADAR device in the stationary mode of operation, the antenna should be aimed forward in a moving vehicle (without approaching traffic) and the value displayed in the target speed display window should be compared against the calibrated speedometer.

b. Moving mode - with the RADAR device in the moving mode of operation, the RADAR operator should compare the value displayed in the patrol speed display window against the calibrated speedometer.

NOTE: At this time, the RADAR instructor should demonstrate the proper procedure of assembling and performing accuracy checks for the specific RADAR speed measuring device for which the RADAR operator-trainee seeks operator certification.

ENFORCEMENT CONSIDERATIONS

The single most important consideration for RADAR operators during enforcement operations is, **IF THERE EXISTS ANY DOUBT CONCERNING THE RADAR DEVICE'S INDICATED SPEED READING, TAKE NO ENFORCEMENT ACTION.**

Tracking History - The RADAR operator should continuously monitor traffic for potential violators. Any enforcement action resulting from a speed measurement obtained with a RADAR device must be supported by several vital elements that comprise what is referred to as a "tracking history".

Visual speed estimation - A visual speed estimate of a potential violator's vehicle should be made independent of any speed measurement obtained utilizing a RADAR device. The RADAR device's speed measurement must compare with and only be used to corroborate the RADAR operator's visual speed estimate. The RADAR operator should be able to testify to the fact that the violator's vehicle was exceeding the posted speed limit even when a RADAR device was not utilized. The ability to estimate speed is a learned skill. RADAR instructors should allow sufficient training time for the RADAR operator trainee to develop this skill. Visual speed estimate training should begin with the RADAR operator trainee observing a "target" vehicle traveling at a known speed. This should provide the RADAR operator trainee with experience in visually estimating various rates of speed. After the RADAR operator trainees have become proficient in their ability to visually estimate the speed of a known "target" vehicle, training that involves realistic traffic conditions should follow. Under the supervision of a RADAR instructor, the RADAR operator trainee should monitor traffic, select a potential violator and estimate the speed of the potential violator's vehicle. Sufficient training time should be provided for the RADAR operator trainee to become proficient in estimating vehicular speed. Following the supervised training, the RADAR operator trainee should demonstrate the ability to; 1) monitor traffic, 2) select potential violators, and 3) visually estimate the speed of the potential violator's vehicle within ± 5 of the indicated speed of the RADAR device.

Audio monitor - The RADAR operator should constantly monitor the RADAR's audio tone for the signal that is being received in order to detect electrical interference, radio frequency interference, or cosine effect. The desirable audio tone will sound clear, consistent and pure. Sudden deviations in the audio tone, static, or buzzing should alert the RADAR operator that effects are present that could affect the accuracy of the device.

NOTE: At this time, the RADAR instructor should demonstrate the proper procedure of assembling and performing accuracy checks for the specific RADAR speed measuring device for which the RADAR operator-trainee seeks operator certification.

ENFORCEMENT CONSIDERATIONS

The single most important consideration for RADAR operators during enforcement operations is, **IF THERE EXISTS ANY DOUBT CONCERNING THE RADAR DEVICE'S INDICATED SPEED READING, TAKE NO ENFORCEMENT ACTION.**

Tracking History - The RADAR operator should continuously monitor traffic for potential violators. Any enforcement action resulting from a speed measurement obtained with a RADAR device must be supported by several vital elements that comprise what is referred to as a "tracking history".

Visual speed estimation - A visual speed estimate of a potential violator's vehicle should be made independent of any speed measurement obtained utilizing a RADAR device. The RADAR device's speed measurement must compare with and only be used to corroborate the RADAR operator's visual speed estimate. The RADAR operator should be able to testify to the fact that the violator's vehicle was exceeding the posted speed limit even when a RADAR device was not utilized. The ability to estimate speed is a learned skill. RADAR instructors should allow sufficient training time for the RADAR operator trainee to develop this skill. Visual speed estimate training should begin with the RADAR operator trainee observing a "target" vehicle traveling at a known speed. This should provide the RADAR operator trainee with experience in visually estimating various rates of speed. After the RADAR operator trainees have become proficient in their ability to visually estimate the speed of a known "target" vehicle, training that involves realistic traffic conditions should follow. Under the supervision of a RADAR instructor, the RADAR operator trainee should monitor traffic, select a potential violator and estimate the speed of the potential violator's vehicle. Sufficient training time should be provided for the RADAR operator trainee to become proficient in estimating vehicular speed. Following the supervised training, the RADAR operator trainee should demonstrate the ability to; 1) monitor traffic, 2) select potential violators, and 3) visually estimate the speed of the potential violator's vehicle within ± 5 of the indicated speed of the RADAR device.

Audio monitor - The RADAR operator should constantly monitor the RADAR's audio tone for the signal that is being received in order to detect electrical interference, radio frequency interference, or cosine effect. The desirable audio tone will sound clear, consistent and pure. Sudden deviations in the audio tone, static, or buzzing should alert the RADAR operator that effects are present that could affect the accuracy of the device.

Target speed display - The target speed displayed should reasonably correspond with the RADAR operator's visual estimate and the RADAR device's audio tone indication.

Patrol speed verification - This additional element of a tracking history is required for moving RADAR operations only. The patrol speed indicated by the RADAR device should correspond to the speed indicated by the patrol vehicle's calibrated or certified speedometer. This verification will ensure the RADAR operator that the RADAR device is computing the target vehicle speed using a valid value as the tracking speed. The RADAR operator should obtain a valid "tracking history" for each potential violator vehicle. The elements of the "tracking history" are vital to ensure an accurate RADAR speed measurement.

RADAR Effects

RADAR operators should recognize and understand the various effects that may affect the RADAR device.

Mechanical Interference - RADAR devices may detect relative motion produced by objects other than potential violator vehicles.

- Outside patrol vehicle, in addition to the obvious moving vehicles, there are many other objects within our environment that are in motion. (Examples: large rotating display signs, industrial air conditioning fans, patrol vehicle heater fan, etc.)

- Inside patrol vehicle:
  - Radio frequency interference
  - Random RFI
  - RFI through power and antenna leads
  - RFI citizen band radio
  - RFI law enforcement radio
  - RFI lighting devices
  - RFI power lines
  - Induced EMF

- Harmonic signal interference
- Own speed capture
- Pulsating signal amplitude
- Scanning
- Audio
- Antenna vibration

Target speed display - The target speed displayed should reasonably correspond with the RADAR operator's visual estimate and the RADAR device's audio tone indication.

Patrol speed verification - This additional element of a tracking history is required for moving RADAR operations only. The patrol speed indicated by the RADAR device should correspond to the speed indicated by the patrol vehicle's calibrated or certified speedometer. This verification will ensure the RADAR operator that the RADAR device is computing the target vehicle speed using a valid value as the tracking speed. The RADAR operator should obtain a valid "tracking history" for each potential violator vehicle. The elements of the "tracking history" are vital to ensure an accurate RADAR speed measurement.

RADAR Effects

RADAR operators should recognize and understand the various effects that may affect the RADAR device.

Mechanical Interference - RADAR devices may detect relative motion produced by objects other than potential violator vehicles.

- Outside patrol vehicle, in addition to the obvious moving vehicles, there are many other objects within our environment that are in motion. (Examples: large rotating display signs, industrial air conditioning fans, patrol vehicle heater fan, etc.)

- Inside patrol vehicle:
  - Radio frequency interference
  - Random RFI
  - RFI through power and antenna leads
  - RFI citizen band radio
  - RFI law enforcement radio
  - RFI lighting devices
  - RFI power lines
  - Induced EMF

- Harmonic signal interference
- Own speed capture
- Pulsating signal amplitude
- Scanning
- Audio
- Antenna vibration

- Motorcycle

*Dented antenna horn

- Windshield obstruction
- Beam reflection
- Weather

. Heat

- Power surge
- Auto-gain control
- Panning
- Batching
- Shadowing
- Multi-path signal

4C GLOSSARY OF TERMS

Absorption - The transmitted radar beam will, unless otherwise acted upon (absorbed, reflected, or refracted), travel infinitely far. Under practical circumstances, the beam may be partially absorbed by natural and man-made substances. Vegetation such as trees, grass, and bushes will absorb radar energy. Freshly turned earth, such as that in a freshly plowed field, will also absorb radar. Plastics of certain types and foam products will absorb radar, as makers of "stealth" automotive accessories have discovered. Absorption of radar will not result in any inaccuracies in the radar readings. It will reduce the strength of the returned signal, and the operational range of the device depending upon the circumstances.

Absolute speed limits - Holds that a given speed limit is in force, regardless of environment conditions, i.e., 35 mph or 50 mph.

Accuracy - When used in conjunction with radar devices means the degree to which the radar device measures and displays the correct speed of a target vehicle that it is tracking.

Ambient interference - The conducted and/or radiated electromagnetic interference and/or mechanical motion interference at a specific location and at a time which would be detrimental to proper radar performance.

Antenna - The antenna horn is that portion of the radar device that shapes and directs the microwave energy (beam). The antenna horn also "catches" the returning microwave energy and directs it to the radar receiver. The cone-shaped antenna horn, usually manufactured of a thin metal, often aluminum, which may be damaged if mishandled. A dented or damaged antenna horn must not be used for speed measurement as inaccurate results may occur due to misdirection of the antenna beam. The antenna horn is used for both directing the transmitted beam and capturing the received (reflected) radar signal. Components at the base of the horn separate the transmitted and received signals.

Antenna horizontal beam width - The total included acute angle, in the horizontal plane, of the main lobe between the half-power points of the radar antenna far-field radiation pattern, where the half-power points are measured relative to the maximum power at the center of the beam and on a radius equidistant from the face of the antenna.

Antenna - The antenna turnstile is a small protuberance, or "post" inside the small end of the antenna horn that directs the radar beam's microwave energy so as to allow the same antenna to be used for both transmitting and receiving radar energy.

Aperture - "A hole, a gap, slit, or other opening; an orifice" (Webster). Vice the aperture would be the large open end of the antenna horn through which the radar beam emerges.

4C GLOSSARY OF TERMS

Absorption - The transmitted radar beam will, unless otherwise acted upon (absorbed, reflected, or refracted), travel infinitely far. Under practical circumstances, the beam may be partially absorbed by natural and man-made substances. Vegetation such as trees, grass, and bushes will absorb radar energy. Freshly turned earth, such as that in a freshly plowed field, will also absorb radar. Plastics of certain types and foam products will absorb radar, as makers of "stealth" automotive accessories have discovered. Absorption of radar will not result in any inaccuracies in the radar readings. It will reduce the strength of the returned signal, and the operational range of the device depending upon the circumstances.

Absolute speed limits - Holds that a given speed limit is in force, regardless of environment conditions, i.e., 35 mph or 50 mph.

Accuracy - When used in conjunction with radar devices means the degree to which the radar device measures and displays the correct speed of a target vehicle that it is tracking.

Ambient interference - The conducted and/or radiated electromagnetic interference and/or mechanical motion interference at a specific location and at a time which would be detrimental to proper radar performance.

Antenna - The antenna horn is that portion of the radar device that shapes and directs the microwave energy (beam). The antenna horn also "catches" the returning microwave energy and directs it to the radar receiver. The cone-shaped antenna horn, usually manufactured of a thin metal, often aluminum, which may be damaged if mishandled. A dented or damaged antenna horn must not be used for speed measurement as inaccurate results may occur due to misdirection of the antenna beam. The antenna horn is used for both directing the transmitted beam and capturing the received (reflected) radar signal. Components at the base of the horn separate the transmitted and received signals.

Antenna horizontal beam width - The total included acute angle, in the horizontal plane, of the main lobe between the half-power points of the radar antenna far-field radiation pattern, where the half-power points are measured relative to the maximum power at the center of the beam and on a radius equidistant from the face of the antenna.

Antenna - The antenna turnstile is a small protuberance, or "post" inside the small end of the antenna horn that directs the radar beam's microwave energy so as to allow the same antenna to be used for both transmitting and receiving radar energy.

Aperture - "A hole, a gap, slit, or other opening; an orifice" (Webster). Vice the aperture would be the large open end of the antenna horn through which the radar beam emerges.

Consumer Product List (CPL) - The National Highway Traffic Safety Administration (NHTSA) has entered into an agreement with the International Association of Chiefs of Police (IACP) and the National Institute of Standards and Technology (NIST) to test all radar devices marketed for police speed measurement purposes. Those devices which successfully pass the NIST tests are added to the Consumer Product List (CPL). A radar model's appearance on the list means that particular model may be used with reasonable expectations of accuracy and reliability.

Cosine effect - The effect due to the target not traveling directly toward the radar device, which lowers the Doppler shift frequency in proportion to the cosine of the angle between the direction of travel of the radar target and a line from the radar device to the target.

Cosine effect stationary mode - Exists when then direction of travel of the target vehicle is not proceeding on a direct path to or from the radar antenna. This may result in a target speed display that is less than the actual speed.

Cosine effect moving mode - Similar to that which is found in the stationary mode except that in the moving mode cosine may effect the patrol speed. When the cosine affects the patrol speed, the target speed may be higher. Therefore, cosine in the moving mode may cause either a higher or lower target speed.

Cross S ction - "A section formed by a plane cutting through an object, usually at right angles to an axis" (Webster). Beam cross-section refers to the area perpendicular to the beam axis, enclosed at any fixed distance from the antenna by the half power point.
We may also refer to the cross section of a radar target. Also referred to as target size, the cross section of a target more correctly refers to the effective area presented to the radar beam from which the beam may be reflected. It is a function of several factors including the projected geometrical area of the target, the curvature of its surfaces, and the conductivity of the target material.

Cycle - "A time interval in which a characteristic, especially a regularly repeated event or sequence of events occurs" (Webster). The radar beam transmits energy as a series of waves. Over the period of one cycle the wave rises, falls, then rises again. (Also see Wave)

Decibel - "A unit used to express relative power levels, usually between acoustic or electric signals, equal to ten times the common logarithm of the ratio of the two levels" (Webster), In a radar device the term decibel (dB) is used when describing power levels. A 28dB signal, for example, is twice as powerful as a 25dB signal because 3dB corresponds to a ratio of 2. Decibels increase logarithmically rather than linearly with signal strength.

Display - A visual readout device.

Consumer Product List (CPL) - The National Highway Traffic Safety Administration (NHTSA) has entered into an agreement with the International Association of Chiefs of Police (IACP) and the National Institute of Standards and Technology (NIST) to test all radar devices marketed for police speed measurement purposes. Those devices which successfully pass the NIST tests are added to the Consumer Product List (CPL). A radar model's appearance on the list means that particular model may be used with reasonable expectations of accuracy and reliability.

Cosine effect - The effect due to the target not traveling directly toward the radar device, which lowers the Doppler shift frequency in proportion to the cosine of the angle between the direction of travel of the radar target and a line from the radar device to the target.

Cosine effect stationary mode - Exists when then direction of travel of the target vehicle is not proceeding on a direct path to or from the radar antenna. This may result in a target speed display that is less than the actual speed.

Cosine effect moving mode - Similar to that which is found in the stationary mode except that in the moving mode cosine may effect the patrol speed. When the cosine affects the patrol speed, the target speed may be higher. Therefore, cosine in the moving mode may cause either a higher or lower target speed.

Cross S ction - "A section formed by a plane cutting through an object, usually at right angles to an axis" (Webster). Beam cross-section refers to the area perpendicular to the beam axis, enclosed at any fixed distance from the antenna by the half power point.
We may also refer to the cross section of a radar target. Also referred to as target size, the cross section of a target more correctly refers to the effective area presented to the radar beam from which the beam may be reflected. It is a function of several factors including the projected geometrical area of the target, the curvature of its surfaces, and the conductivity of the target material.

Cycle - "A time interval in which a characteristic, especially a regularly repeated event or sequence of events occurs" (Webster). The radar beam transmits energy as a series of waves. Over the period of one cycle the wave rises, falls, then rises again. (Also see Wave)

Decibel - "A unit used to express relative power levels, usually between acoustic or electric signals, equal to ten times the common logarithm of the ratio of the two levels" (Webster), In a radar device the term decibel (dB) is used when describing power levels. A 28dB signal, for example, is twice as powerful as a 25dB signal because 3dB corresponds to a ratio of 2. Decibels increase logarithmically rather than linearly with signal strength.

Display - A visual readout device.

Frequency Spectrum - Communications engineers define this as a range of frequencies appropriate to the operation of an electronic device.

Gas Plasma Display - Some radar devices use a speed display in which glass, gas-filled tubes containing ten thin, fragile wires are used to form the numerals 0 through 9. When electric current is applied to a specific formed wire, the gas inside the tube surrounding the surface of that formed wire glows, thereby making a number visible. Usually two or three tubes are used as the radar display. Although the gas tube displays may be quite bright and provide good visibility in bright light, they are subject to damage through shock and subsequent breakage of the fragile wires.

Gigahertz (Gigacycles Per second) - Radar operates in the "microwave" band at frequencies of many billions of cycles per second. The prefix "giga" is used to indicate "billion". For example the X-band radar device operates at a center frequency of 10.525 gigahertz (remember one cycle per second is equal to one hertz).

Half Power Point - In the far field region, at any given distance from the face of the antenna, the half power points are those locations where the power has fallen to one-half of the power on the beam axis. For example, if we were to take a photographic light meter and hold it up to a flashlight beam, we would obtain a high reading. Let's say we get a reading of 10. The half power points of that beam would be the physical location on either side of the light source, where the light meter is reading 5, or one half of the original source's energy. The half power points of a radar device are used to give relative descriptions of the beam width.

Hertz - Originally frequencies were designated in units "cycle per second", as in thirty cycles per second. In honor of Heinrich Rudolph Hertz (Germany, 1857-1894) the term hertz has been designated as the replacement word for "cycles per second", as in "thirty hertz".

High Doppler Filter - In a moving radar device we know that the basic computation is Closing Speed (high Doppler signal) minus Patrol Speed (low Doppler signal) equals Target Speed. The high Doppler is that portion of the signal reflected from the target vehicle back to the radar antenna. This high Doppler signal is the sum of the transmitted frequency plus the frequency shift resulting from the relative motion between the target and patrol vehicles. This, then, is a very high frequency signal. The high Doppler filter is a electrical device that allows a specific range of return frequencies to pass. This range of frequencies describes that range of closing speeds that the radar is designed to handle.

Induced EMF - "The generation of electromotive force (EMF) in a closed circuit by varying magnetic flux through the circuit" (Webster). A current passing through a wire will generate a magnetic field, or flux. If this field is allowed to pass through a nearby wire in another circuit, then the second wire may have an induced EMF within it. In a radar device

Frequency Spectrum - Communications engineers define this as a range of frequencies appropriate to the operation of an electronic device.

Gas Plasma Display - Some radar devices use a speed display in which glass, gas-filled tubes containing ten thin, fragile wires are used to form the numerals 0 through 9. When electric current is applied to a specific formed wire, the gas inside the tube surrounding the surface of that formed wire glows, thereby making a number visible. Usually two or three tubes are used as the radar display. Although the gas tube displays may be quite bright and provide good visibility in bright light, they are subject to damage through shock and subsequent breakage of the fragile wires.

Gigahertz (Gigacycles Per second) - Radar operates in the "microwave" band at frequencies of many billions of cycles per second. The prefix "giga" is used to indicate "billion". For example the X-band radar device operates at a center frequency of 10.525 gigahertz (remember one cycle per second is equal to one hertz).

Half Power Point - In the far field region, at any given distance from the face of the antenna, the half power points are those locations where the power has fallen to one-half of the power on the beam axis. For example, if we were to take a photographic light meter and hold it up to a flashlight beam, we would obtain a high reading. Let's say we get a reading of 10. The half power points of that beam would be the physical location on either side of the light source, where the light meter is reading 5, or one half of the original source's energy. The half power points of a radar device are used to give relative descriptions of the beam width.

Hertz - Originally frequencies were designated in units "cycle per second", as in thirty cycles per second. In honor of Heinrich Rudolph Hertz (Germany, 1857-1894) the term hertz has been designated as the replacement word for "cycles per second", as in "thirty hertz".

High Doppler Filter - In a moving radar device we know that the basic computation is Closing Speed (high Doppler signal) minus Patrol Speed (low Doppler signal) equals Target Speed. The high Doppler is that portion of the signal reflected from the target vehicle back to the radar antenna. This high Doppler signal is the sum of the transmitted frequency plus the frequency shift resulting from the relative motion between the target and patrol vehicles. This, then, is a very high frequency signal. The high Doppler filter is a electrical device that allows a specific range of return frequencies to pass. This range of frequencies describes that range of closing speeds that the radar is designed to handle.

Induced EMF - "The generation of electromotive force (EMF) in a closed circuit by varying magnetic flux through the circuit" (Webster). A current passing through a wire will generate a magnetic field, or flux. If this field is allowed to pass through a nearby wire in another circuit, then the second wire may have an induced EMF within it. In a radar device

Frequency Spectrum - Communications engineers define this as a range of frequencies appropriate to the operation of an electronic device.

Gas Plasma Display - Some radar devices use a speed display in which glass, gas-filled tubes containing ten thin, fragile wires are used to form the numerals 0 through 9. When electric current is applied to a specific formed wire, the gas inside the tube surrounding the surface of that formed wire glows, thereby making a number visible. Usually two or three tubes are used as the radar display. Although the gas tube displays may be quite bright and provide good visibility in bright light, they are subject to damage through shock and subsequent breakage of the fragile wires.

Gigahertz (Gigacycles Per second) - Radar operates in the "microwave" band at frequencies of many billions of cycles per second. The prefix "giga" is used to indicate "billion". For example the X-band radar device operates at a center frequency of 10.525 gigahertz (remember one cycle per second is equal to one hertz).

Half Power Point - In the far field region, at any given distance from the face of the antenna, the half power points are those locations where the power has fallen to one-half of the power on the beam axis. For example, if we were to take a photographic light meter and hold it up to a flashlight beam, we would obtain a high reading. Let's say we get a reading of 10. The half power points of that beam would be the physical location on either side of the light source, where the light meter is reading 5, or one half of the original source's energy. The half power points of a radar device are used to give relative descriptions of the beam width.

Hertz - Originally frequencies were designated in units "cycle per second", as in thirty cycles per second. In honor of Heinrich Rudolph Hertz (Germany, 1857-1894) the term hertz has been designated as the replacement word for "cycles per second", as in "thirty hertz".

High Doppler Filter - In a moving radar device we know that the basic computation is Closing Speed (high Doppler signal) minus Patrol Speed (low Doppler signal) equals Target Speed. The high Doppler is that portion of the signal reflected from the target vehicle back to the radar antenna. This high Doppler signal is the sum of the transmitted frequency plus the frequency shift resulting from the relative motion between the target and patrol vehicles. This, then, is a very high frequency signal. The high Doppler filter is a electrical device that allows a specific range of return frequencies to pass. This range of frequencies describes that range of closing speeds that the radar is designed to handle.

Induced EMF - "The generation of electromotive force (EMF) in a closed circuit by varying magnetic flux through the circuit" (Webster). A current passing through a wire will generate a magnetic field, or flux. If this field is allowed to pass through a nearby wire in another circuit, then the second wire may have an induced EMF within it. In a radar device

Luminance contrast - The relationship between the luminance of an object and the luminance of its own background.

Main Axis - The antenna beam of a radar device is conical and forwardly directed towards an intended target, When the antenna is aligned with a distant target, the main axis would be an imaginary line from the antenna horn to the target. This is the direction of the greatest concentration of the radar beam strength. This imaginary line is used when describing the beam width, such as "six degrees from main axis to half power points."

Megacycles - Using the prefix "mega", meaning 1,000,000 gives us another way to indicate frequency. 155,250,000 cycles per second would then equal 155.250 megacycles per second, or more correctly, 155.250 megahertz.

Microprocessor - This electronic device is the "brain" of the radar unit. It is a solid state micro chip device containing the program of instructions to interpret speeds, calculate them, and display them to the operator. It processes the input data and provides the other components with the information to display or otherwise indicate to the operator what operation is going on.

Microwave output power - That part of the total power produced by the microwave generator in the radar devices.

Microwave Oscillator - A radar's antenna energy source.

Millisecond - A millisecond is a thousandth of a second. This term is sometimes used to describe the speed of an electrical event. At the speed of light, a radar signal would travel nearly a million (983,000) feet in one millisecond.

Moving mode - The capability of a radar device to measure and display the speed of a target vehicle while the radar device is moving with respect to the surrounding terrain.

mW/cm^2 - (note: this is one milliwatt per centimeter squared) When the power of a radar beam is measured, a power meter probe is placed at the aperture of the radar antenna horn. The strength of the beam is stated in milliwatts of power per square centimeter. This gives us a relative value that we may apply to other devices to compare them, or to meet standards. A square centimeter (1/100th of a meter) is a little over 3/8th of an inch square.

Nanometers - This term us used to designate billionths of a meter.

Nanosecond - A billionth of a second. At the speed of light, a radar signal would travel only about one foot in one nanosecond!

National Institute of Standards and Technology (NIST) - The NIST is a federal laboratory which provides a wide range of services. One of these is to supervise the testing of all submitted radar models submitted by manufacturers who wish to have them placed on the Consumer Products List (CPL). This gives the users assurance of the quality of the design, operation, and reliability of the particular radar model.

Near-field - That region in close proximity to the transmitting antenna that is not included in the region defined as "far-field region."

Negati Grod - Almost all vehicles equipped with an electrical system utilize what is termed as a negative ground electrical system. This means that the negative terminal of the battery as well as all other electrical components use the chassis or frame of the vehicle for the return path of the electricity to the battery. Many electrical devices may be permanently damaged if incorrectly connected to the power source. Some of the newer radar units have what is termed "reverse polarity protection" which is a circuit that prevents device damage in the event of accidental connection to the power the wrong way, e.g, positive to negative and negative to positive.

Nominal value - The numerical value of a device characteristic as specified by the manufacturer.

Operational area of the beam - The area of a radar beam in which a valid target reading may be accepted.

Opposite direction moving mode - That a radar device has the ability to measure and display the speed of a target vehicle while the radar device and the target vehicle are moving in opposite directions.

Panning effect -A hand held RADAR antenna that is swung swiftly or "panned" past the side of a parked car, brick wall, or some other stationary object is alleged to produce a speed measurement.

Patrol speed - The speed at which the patrol vehicle is moving with respect to the surrounding terrain.

Patrol channel - That portion of the radar circuitry of a radar device that processes and calculates the speed of a patrol vehicle when the radar device is operating in the moving mode.

Phase-lock Loop - This is an electrical circuit often employed in frequency synthesis and other circuits. When properly engineered this circuit allows fewer components to be employed in the radar device. Some detractors of radar have blamed the phase-lock loop

National Institute of Standards and Technology (NIST) - The NIST is a federal laboratory which provides a wide range of services. One of these is to supervise the testing of all submitted radar models submitted by manufacturers who wish to have them placed on the Consumer Products List (CPL). This gives the users assurance of the quality of the design, operation, and reliability of the particular radar model.

Near-field - That region in close proximity to the transmitting antenna that is not included in the region defined as "far-field region."

Negati Grod - Almost all vehicles equipped with an electrical system utilize what is termed as a negative ground electrical system. This means that the negative terminal of the battery as well as all other electrical components use the chassis or frame of the vehicle for the return path of the electricity to the battery. Many electrical devices may be permanently damaged if incorrectly connected to the power source. Some of the newer radar units have what is termed "reverse polarity protection" which is a circuit that prevents device damage in the event of accidental connection to the power the wrong way, e.g, positive to negative and negative to positive.

Nominal value - The numerical value of a device characteristic as specified by the manufacturer.

Operational area of the beam - The area of a radar beam in which a valid target reading may be accepted.

Opposite direction moving mode - That a radar device has the ability to measure and display the speed of a target vehicle while the radar device and the target vehicle are moving in opposite directions.

Panning effect -A hand held RADAR antenna that is swung swiftly or "panned" past the side of a parked car, brick wall, or some other stationary object is alleged to produce a speed measurement.

Patrol speed - The speed at which the patrol vehicle is moving with respect to the surrounding terrain.

Patrol channel - That portion of the radar circuitry of a radar device that processes and calculates the speed of a patrol vehicle when the radar device is operating in the moving mode.

Phase-lock Loop - This is an electrical circuit often employed in frequency synthesis and other circuits. When properly engineered this circuit allows fewer components to be employed in the radar device. Some detractors of radar have blamed the phase-lock loop

National Institute of Standards and Technology (NIST) - The NIST is a federal laboratory which provides a wide range of services. One of these is to supervise the testing of all submitted radar models submitted by manufacturers who wish to have them placed on the Consumer Products List (CPL). This gives the users assurance of the quality of the design, operation, and reliability of the particular radar model.

Near-field - That region in close proximity to the transmitting antenna that is not included in the region defined as "far-field region."

Negati Grod - Almost all vehicles equipped with an electrical system utilize what is termed as a negative ground electrical system. This means that the negative terminal of the battery as well as all other electrical components use the chassis or frame of the vehicle for the return path of the electricity to the battery. Many electrical devices may be permanently damaged if incorrectly connected to the power source. Some of the newer radar units have what is termed "reverse polarity protection" which is a circuit that prevents device damage in the event of accidental connection to the power the wrong way, e.g, positive to negative and negative to positive.

Nominal value - The numerical value of a device characteristic as specified by the manufacturer.

Operational area of the beam - The area of a radar beam in which a valid target reading may be accepted.

Opposite direction moving mode - That a radar device has the ability to measure and display the speed of a target vehicle while the radar device and the target vehicle are moving in opposite directions.

Panning effect -A hand held RADAR antenna that is swung swiftly or "panned" past the side of a parked car, brick wall, or some other stationary object is alleged to produce a speed measurement.

Patrol speed - The speed at which the patrol vehicle is moving with respect to the surrounding terrain.

Patrol channel - That portion of the radar circuitry of a radar device that processes and calculates the speed of a patrol vehicle when the radar device is operating in the moving mode.

Phase-lock Loop - This is an electrical circuit often employed in frequency synthesis and other circuits. When properly engineered this circuit allows fewer components to be employed in the radar device. Some detractors of radar have blamed the phase-lock loop

Shadowing effect - A patrol speed display (lower than actual) which occurs when a moving mode radar uses a slow moving vehicle, traveling in the same direction as the patrol vehicle, rather than the road surface or other stationary objects to measure the patrol vehicle's speed which is displayed as the difference in speed between the patrol vehicle and the slow moving vehicle.

Side Lobes - The radar beam is often described as "cigar-shaped". This may be true of the main portion of the beam, however a small fraction of the emission is also radiated to the sides of the main beam. Because of the design of the antenna the majority of the radar energy is directed forward. The amount of radar energy decreases as a function of the distance from the axis of the central portion of the beam towards the sides of the beam. There is measurable radar energy to the sides of the antenna, hence the term "side lobes". These side lobes represent a very small portion of the overall transmitted energy. We may observe the presence of the side lobes when a target vehicle passes a stationary radar unit. The vehicle is "tracked" up to and even as it passes the radar's location. Although the indicated speed decreases to zero because of the cosine effect, still we are able to detect its presence because of the side lobes.

Solid State - Solid state refers to the use of semiconductor components, such as transistors, integrated circuits, and switches to perform electronic functions. They are far more reliable, produce less heat, and cost less that their mechanical counterparts.

Speed display transfer - A radar control that causes speed on display as target speed and patrol speed to be retained on display until reset.

Speed monitor alert - A function that alerts the operator when a target speed signal is received that is equal to or above some preselected threshold speed. This function should be disabled.

Speed of Light - Over the years scientists have measured how fast radio waves travel. They have determined that radio waves travel at the speed of light, or 186,282 miles per second.

Spurious display - A speed display that is produced by something other than a valid target or patrol vehicle

Squelch - The capacity of a radar to inhibit the Doppler audio sound when the radar is in operation and not receiving a target signal.

Squelch Control - Radar devices are frequently left operating for long periods of time. The radar receiver requires a device to cut off, or squelch, weak or background noise when no signal is present. This is usually variable control which the operator may adjust to set

Shadowing effect - A patrol speed display (lower than actual) which occurs when a moving mode radar uses a slow moving vehicle, traveling in the same direction as the patrol vehicle, rather than the road surface or other stationary objects to measure the patrol vehicle's speed which is displayed as the difference in speed between the patrol vehicle and the slow moving vehicle.

Side Lobes - The radar beam is often described as "cigar-shaped". This may be true of the main portion of the beam, however a small fraction of the emission is also radiated to the sides of the main beam. Because of the design of the antenna the majority of the radar energy is directed forward. The amount of radar energy decreases as a function of the distance from the axis of the central portion of the beam towards the sides of the beam. There is measurable radar energy to the sides of the antenna, hence the term "side lobes". These side lobes represent a very small portion of the overall transmitted energy. We may observe the presence of the side lobes when a target vehicle passes a stationary radar unit. The vehicle is "tracked" up to and even as it passes the radar's location. Although the indicated speed decreases to zero because of the cosine effect, still we are able to detect its presence because of the side lobes.

Solid State - Solid state refers to the use of semiconductor components, such as transistors, integrated circuits, and switches to perform electronic functions. They are far more reliable, produce less heat, and cost less that their mechanical counterparts.

Speed display transfer - A radar control that causes speed on display as target speed and patrol speed to be retained on display until reset.

Speed monitor alert - A function that alerts the operator when a target speed signal is received that is equal to or above some preselected threshold speed. This function should be disabled.

Speed of Light - Over the years scientists have measured how fast radio waves travel. They have determined that radio waves travel at the speed of light, or 186,282 miles per second.

Spurious display - A speed display that is produced by something other than a valid target or patrol vehicle

Squelch - The capacity of a radar to inhibit the Doppler audio sound when the radar is in operation and not receiving a target signal.

Squelch Control - Radar devices are frequently left operating for long periods of time. The radar receiver requires a device to cut off, or squelch, weak or background noise when no signal is present. This is usually variable control which the operator may adjust to set

Tuning Fork Operation - The tuning fork is a carefully machined piece of metal, shaped into two tines which, when tapped on a non-metallic object, will vibrate at a specific frequency. The tuning fork(s) are used as an external check of the accuracy of the radar device. Because radar detects motion, the vibrating tines are interpreted as a particular target speed. Forks are usually stamped with the operating band (X-band or K-band), and the speed the particular fork should cause the radar to display. Stationary radar devices use one fork while moving radar employs two forks. The radar device and tuning fork(s) should be calibrated as a set. Forks should not be interchanged among other radar devices due to this calibration and certification as a set.

Type I radar device - A radar device that transmits microwave energy in the 10,500 to 10,550 Mhz frequency band (in the X-band) and operates only in the stationary mode.

Type II radar device - A radar device that transmits microwave energy in the 10,500 to 10,550 MHz frequency band (in the X-band) and operates in both the stationary and moving modes.

Type III radar device - A radar device that transmits microwave energy in the 24,050 to 24,250 MHz frequency band (in the K band) and operates only in the stationary mode.

Type IV radar device - A radar device that transmits microwave energy in the 24,050 to 24,250 MHz frequency band (in the K-band) and operates in both the stationary and moving modes.

Type V radar device - A radar device that transmits microwave energy in the 33,400 to 36,000 MHz frequency band (in the Ka-Band) and operates only in the stationary mode.

Type VI radar device - A radar device that transmits microwave energy in the 33,400 to 36,000 MHz frequency band (in the Ka-Band) and operates in both the stationary and moving modes.

VDC - All the radar units manufactured or in use today use what is termed direct current as opposed to alternating current. This is what automobiles, motorcycles and battery packs provide for power to the radar units. The term "VDC" means volts direct current, and usually appears in the radar manufacturer's specifications such as "Power requirements: 10.8 to 16.5 VDC, 1.5A maximum". This would mean the radar will function normally only when provided with power at from between 10.8 to 16.5 volts.

Verify - To assess the operational characteristics of a radar unit, without any physical adjustments to the unit from a known standard.

Tuning Fork Operation - The tuning fork is a carefully machined piece of metal, shaped into two tines which, when tapped on a non-metallic object, will vibrate at a specific frequency. The tuning fork(s) are used as an external check of the accuracy of the radar device. Because radar detects motion, the vibrating tines are interpreted as a particular target speed. Forks are usually stamped with the operating band (X-band or K-band), and the speed the particular fork should cause the radar to display. Stationary radar devices use one fork while moving radar employs two forks. The radar device and tuning fork(s) should be calibrated as a set. Forks should not be interchanged among other radar devices due to this calibration and certification as a set.

Type I radar device - A radar device that transmits microwave energy in the 10,500 to 10,550 Mhz frequency band (in the X-band) and operates only in the stationary mode.

Type II radar device - A radar device that transmits microwave energy in the 10,500 to 10,550 MHz frequency band (in the X-band) and operates in both the stationary and moving modes.

Type III radar device - A radar device that transmits microwave energy in the 24,050 to 24,250 MHz frequency band (in the K band) and operates only in the stationary mode.

Type IV radar device - A radar device that transmits microwave energy in the 24,050 to 24,250 MHz frequency band (in the K-band) and operates in both the stationary and moving modes.

Type V radar device - A radar device that transmits microwave energy in the 33,400 to 36,000 MHz frequency band (in the Ka-Band) and operates only in the stationary mode.

Type VI radar device - A radar device that transmits microwave energy in the 33,400 to 36,000 MHz frequency band (in the Ka-Band) and operates in both the stationary and moving modes.

VDC - All the radar units manufactured or in use today use what is termed direct current as opposed to alternating current. This is what automobiles, motorcycles and battery packs provide for power to the radar units. The term "VDC" means volts direct current, and usually appears in the radar manufacturer's specifications such as "Power requirements: 10.8 to 16.5 VDC, 1.5A maximum". This would mean the radar will function normally only when provided with power at from between 10.8 to 16.5 volts.

Verify - To assess the operational characteristics of a radar unit, without any physical adjustments to the unit from a known standard.

Recommended Illustrations - Specific study materials for setup, testing, and operation of each RADAR device.

Instructor Tasks - The instructor must be familiar with the structure and content of this unit, which contains the following segments:

- Introduction to the RADAR
- The basic functions of the RADAR device(s).
- Presentation and classroom demonstrations of setting up, testing, and operating the RADAR device(s).

NOTE: If a number of RADAR devices are used, more time may be needed.
This sample format may be used to prepare the outline, but it need not restrict you. Make any necessary modifications or dispense with it altogether if some other format is more suitable.

Objectives:

- Identify your RADAR unit.
- Identify and describe instrument components and their functions.
- Describe the procedures for setting up, testing, and operating the RADAR unit.

REMEMBER THAT WHICH FOLLOWS IS A SUGGESTED FORMAT FOR THE UNIT. MODIFICATION OF THE CONTENT WILL BE NECESSARY IN ORDER TO MEET YOUR SPECIFIC NEEDS.

Maj Component:

- Target window
- Patrol window
- Speaker
- Selector switch
- Moving/Stationary switch
- Low-Power indicator
- Dim control
- Range control
- Audio control
- Power-On switch.

Component Functions - The target window, labeled MPH, displays target vehicle speeds with lighted multi-segment Numitrons (0-199 mph).

The patrol window, labeled VERIFY SPEED, displays the patrol vehicle's speed with lighted seven-segment Numitrons (0-199 mph). The speaker provides an audio reproduction of the Doppler signal that is being received.

Recommended Illustrations - Specific study materials for setup, testing, and operation of each RADAR device.

Instructor Tasks - The instructor must be familiar with the structure and content of this unit, which contains the following segments:

- Introduction to the RADAR
- The basic functions of the RADAR device(s).
- Presentation and classroom demonstrations of setting up, testing, and operating the RADAR device(s).

NOTE: If a number of RADAR devices are used, more time may be needed.
This sample format may be used to prepare the outline, but it need not restrict you. Make any necessary modifications or dispense with it altogether if some other format is more suitable.

Objectives:

- Identify your RADAR unit.
- Identify and describe instrument components and their functions.
- Describe the procedures for setting up, testing, and operating the RADAR unit.

REMEMBER THAT WHICH FOLLOWS IS A SUGGESTED FORMAT FOR THE UNIT. MODIFICATION OF THE CONTENT WILL BE NECESSARY IN ORDER TO MEET YOUR SPECIFIC NEEDS.

Maj Component:

- Target window
- Patrol window
- Speaker
- Selector switch
- Moving/Stationary switch
- Low-Power indicator
- Dim control
- Range control
- Audio control
- Power-On switch.

Component Functions - The target window, labeled MPH, displays target vehicle speeds with lighted multi-segment Numitrons (0-199 mph).

The patrol window, labeled VERIFY SPEED, displays the patrol vehicle's speed with lighted seven-segment Numitrons (0-199 mph). The speaker provides an audio reproduction of the Doppler signal that is being received.

The selector switch has the following settings:

- OFF-no power supplied to the unit.
- SEG CK (segment check)-checks the lighted Numitron segments mentioned above.
- CAL 60-performs an internal circuit test.
- The MOV/STA rocker switch allows the operator to select whether the unit will be used as moving or stationary RADAR.
- The low-power indicator (Described and Point Out Location) appears when the power drops below the manufacturer's specifications.
- The dim control allows the officer to adjust the brightness of the readouts.
- The range control allows the officer to adjust the sensitivity of the RADAR receiver.

The audio control allows the officer to adjust the audio volume of the monitored Doppler signals.

- The power-on indicator (Describe and Point Out Location) shows that the unit is receiving at least some operational power.

Setup and Test Procedures:

- Connect power and antenna cords to rear of unit.

*Ensure that the selector switch is in the OFF position.

- Plug the power cord into the cigarette lighter or a battery pack.
- Mount the unit (in the classroom, mount it on a desk).

Perform the light test:

- Set the MOV/STA switch to MOV.
- Set the selector switch to the SEC CK position. The number "188" will appear in the target (MPH) window and the number "88" will appear in the patrol (VERIFY) window. This checks all displays by lighting all segments of the Numitrons.

*Adjust the brightness of the displays with the dim switch.

Perform internal circuit test:

- Set the MOV/STA switch to STA.
- Set the selector switch to the CAL 60 position. The number "60" should appear in the target window.
- Set the MOV/STA switch to MOV. The number "60" should now appear in the patrol window.

The selector switch has the following settings:

- OFF-no power supplied to the unit.
- SEG CK (segment check)-checks the lighted Numitron segments mentioned above.
- CAL 60-performs an internal circuit test.
- The MOV/STA rocker switch allows the operator to select whether the unit will be used as moving or stationary RADAR.
- The low-power indicator (Described and Point Out Location) appears when the power drops below the manufacturer's specifications.
- The dim control allows the officer to adjust the brightness of the readouts.
- The range control allows the officer to adjust the sensitivity of the RADAR receiver.

The audio control allows the officer to adjust the audio volume of the monitored Doppler signals.

- The power-on indicator (Describe and Point Out Location) shows that the unit is receiving at least some operational power.

Setup and Test Procedures:

- Connect power and antenna cords to rear of unit.

*Ensure that the selector switch is in the OFF position.

- Plug the power cord into the cigarette lighter or a battery pack.
- Mount the unit (in the classroom, mount it on a desk).

Perform the light test:

- Set the MOV/STA switch to MOV.
- Set the selector switch to the SEC CK position. The number "188" will appear in the target (MPH) window and the number "88" will appear in the patrol (VERIFY) window. This checks all displays by lighting all segments of the Numitrons.

*Adjust the brightness of the displays with the dim switch.

Perform internal circuit test:

- Set the MOV/STA switch to STA.
- Set the selector switch to the CAL 60 position. The number "60" should appear in the target window.
- Set the MOV/STA switch to MOV. The number "60" should now appear in the patrol window.

Perform external tuning fork test:

- Set the selector switch to MAN.
- Set the MOV/STA switch to STA. Select the low-speed fork, strike it, and quickly hold it in front of the antenna. The appropriate reading should appear in the target window. Repeat the test with the high-speed fork. An appropriate reading should again appear in the target window.

Set the MOV/STA switch to MOV:

- Repeat the individual high and low speed fork tests. The appropriate speed readings should now appear in the patrol window.
- Strike the low speed fork and hold it in front of the antenna. The appropriate speed will again be displayed in the patrol window.

Patrol speed verification test: - This will be demonstrated during the Field Practice segment of this course. The test involves a comparison of the patrol speed displayed on the RADAR against the calibrated patrol car speedometer. If the RADAR unit tails to perform in accordance with the prescribed parameters, the unit should not be used.

Field Segment

Objective - Provide the instructor/trainee with an opportunity to acquire in-depth hands-on practice in the operation of specific RADAR instrument(s).

Requirements - Special Facilities - Facility for conducting actual RADAR speed measurements - The facility may be a controlled or restricted area such as a test track, large parking lot, or some other location isolated from unauthorized traffic or, conversely, a public access roadway. Alternatively, both types of facilities may be used with each serving for a portion of this unit.

Note: If a controlled test facility is used, it will also be necessary to provide target vehicles, target vehicle drivers, and related support equipment.

Instructor **Tasks** - This unit is devoted exclusively to instructor/trainee practice on assigned RADAR devices. The instructor's task is to monitor each trainees performance, provide additional instruction and demonstration when necessary and determine whether each trainee has achieved a satisfactory level of proficiency.

If the practice is conducted at a controlled test facility, one instructor or instructor's aide must coordinate the target vehicle(s). It is recommended that trainees practice in groups of three or four, with an instructor or instructor's aide assigned to each group. Group members will take turns in setting up, testing for accuracy, and operating the RADAR device(s).

Perform external tuning fork test:

- Set the selector switch to MAN.
- Set the MOV/STA switch to STA. Select the low-speed fork, strike it, and quickly hold it in front of the antenna. The appropriate reading should appear in the target window. Repeat the test with the high-speed fork. An appropriate reading should again appear in the target window.

Set the MOV/STA switch to MOV:

- Repeat the individual high and low speed fork tests. The appropriate speed readings should now appear in the patrol window.
- Strike the low speed fork and hold it in front of the antenna. The appropriate speed will again be displayed in the patrol window.

Patrol speed verification test: - This will be demonstrated during the Field Practice segment of this course. The test involves a comparison of the patrol speed displayed on the RADAR against the calibrated patrol car speedometer. If the RADAR unit tails to perform in accordance with the prescribed parameters, the unit should not be used.

Field Segment

Objective - Provide the instructor/trainee with an opportunity to acquire in-depth hands-on practice in the operation of specific RADAR instrument(s).

Requirements - Special Facilities - Facility for conducting actual RADAR speed measurements - The facility may be a controlled or restricted area such as a test track, large parking lot, or some other location isolated from unauthorized traffic or, conversely, a public access roadway. Alternatively, both types of facilities may be used with each serving for a portion of this unit.

Note: If a controlled test facility is used, it will also be necessary to provide target vehicles, target vehicle drivers, and related support equipment.

Instructor **Tasks** - This unit is devoted exclusively to instructor/trainee practice on assigned RADAR devices. The instructor's task is to monitor each trainees performance, provide additional instruction and demonstration when necessary and determine whether each trainee has achieved a satisfactory level of proficiency.

If the practice is conducted at a controlled test facility, one instructor or instructor's aide must coordinate the target vehicle(s). It is recommended that trainees practice in groups of three or four, with an instructor or instructor's aide assigned to each group. Group members will take turns in setting up, testing for accuracy, and operating the RADAR device(s).

Each trainee group must be furnished with at least one RADAR unit and all necessary peripheral equipment (tuning forks, power supplies, etc.).

Hands on Practice:

- Setup
- Tests of Accuracy
- Operation

Practice Segment - During the practice segment, the class will be broken up into small groups, giving students the opportunity for hands-on practice with the RADAR unit(s) they will be using in their departments. It is recommended that the groups be composed of not more than four students, under the supervision of one instructor or instructor's aide. The purpose of the small group is to allow each student to set up, test for accuracy, and operate a RADAR unit.

The selection of a site for the practice sessions is left to the discretion of the Course Administrator; an empty parking lot will often suffice. The major consideration in site selection is that the site be large enough so that a RADAR-equipped police car can monitor the speed of a target vehicle as it passes through the area. The practice sessions can also be run on actual roadways. If the practice segments are to be run on a highway or secondary road, the selection of the site should be made in accordance with the criteria discussed earlier. Remember, the most important criterion is the safety of the student and the public. When operating RADAR at a particular location, the instructors must notify the police agency charged with the patrol of the area. This will eliminate confusion over the presence of the student patrol car and will ensure that the student patrol car does not interfere in any way with the normal patrol procedures or other activities in that area.

The student RADAR operator should take the driver's seat; the other students take the back seat, while the instructor sits on the front passenger's seat. Each student will take a turn as the driver/operator, beginning by setting up the unit and running through its various testing procedures. The student must follow all approved operating procedures that would be taken in actual patrol situations.

After setting up and testing a stationary RADAR unit, the student should be allowed time for at least 20 target readings. With a moving RADAR unit, each student should he allowed enough time for another 20 readings while the patrol car is both stationary and moving. The students should be encouraged to ask questions during the course of their hands-on training (e.g., about spurious or 'ghost" readings, interference, the panning effect, and so on).

Each trainee group must be furnished with at least one RADAR unit and all necessary peripheral equipment (tuning forks, power supplies, etc.).

Hands on Practice:

- Setup
- Tests of Accuracy
- Operation

Practice Segment - During the practice segment, the class will be broken up into small groups, giving students the opportunity for hands-on practice with the RADAR unit(s) they will be using in their departments. It is recommended that the groups be composed of not more than four students, under the supervision of one instructor or instructor's aide. The purpose of the small group is to allow each student to set up, test for accuracy, and operate a RADAR unit.

The selection of a site for the practice sessions is left to the discretion of the Course Administrator; an empty parking lot will often suffice. The major consideration in site selection is that the site be large enough so that a RADAR-equipped police car can monitor the speed of a target vehicle as it passes through the area. The practice sessions can also be run on actual roadways. If the practice segments are to be run on a highway or secondary road, the selection of the site should be made in accordance with the criteria discussed earlier. Remember, the most important criterion is the safety of the student and the public. When operating RADAR at a particular location, the instructors must notify the police agency charged with the patrol of the area. This will eliminate confusion over the presence of the student patrol car and will ensure that the student patrol car does not interfere in any way with the normal patrol procedures or other activities in that area.

The student RADAR operator should take the driver's seat; the other students take the back seat, while the instructor sits on the front passenger's seat. Each student will take a turn as the driver/operator, beginning by setting up the unit and running through its various testing procedures. The student must follow all approved operating procedures that would be taken in actual patrol situations.

After setting up and testing a stationary RADAR unit, the student should be allowed time for at least 20 target readings. With a moving RADAR unit, each student should he allowed enough time for another 20 readings while the patrol car is both stationary and moving. The students should be encouraged to ask questions during the course of their hands-on training (e.g., about spurious or 'ghost" readings, interference, the panning effect, and so on).

The trainees must also keep in mind, and should point out to the instructor as they arise, the various elements of supportive evidence-visual estimate, audio Doppler, RADAR reading, and speedometer verification-needed to construct a tracking history for each target vehicle.

Each student should be exposed to the factors affecting RADAR. This will give the student some idea of the particular tendencies and limitations of RADAR regarding each of the effects it can produce. By knowing what specific actions are needed to produce an improper reading, the student will be better able to avoid such readings on actual patrol.

The trainees should evaluate each other for any actions they consider inappropriate or erroneous. At the end of each turn, the driver/operator should disassemble and dismount the unit. When all of the students have had turns as driver/operator, the groups will return to the classroom.

A set of work exercises are included that may he used in this field practice segment. It contains a series of experiments that a student or group of students can conduct to determine the tendencies and limitations of a particular RADAR device. The format may be used as written or modified to meet the instructor's specific needs.

Police Traffic RADAR Work Exercises

Objective - This unit of instruction is designed to provide the student with a structured field experience that will provide first hand knowledge of traffic RADAR operational characteristics.

Exp[redacted]nts

- Tuning Fork:
  - Hold an oscillating (struck) tuning fork approximately 3 feet from the face of the traffic RADAR antenna. Is there an appropriate display on the readout? YES _____ NO _____

  - Slowly move the oscillating tuning fork towards the face of the RADAR antenna. Approximately how close to the face of the antenna does the tuning fork have to come before an appropriate reading appears on the readout display? INCHES

  - Holding an oscillating tuning fork approximately 1 inch from the antenna face, slowly move the tuning fork away. Approximately how far away from the face of the antenna must the tuning fork be moved before the appropriate reading appears on the readout display? I N C H E S

The trainees must also keep in mind, and should point out to the instructor as they arise, the various elements of supportive evidence-visual estimate, audio Doppler, RADAR reading, and speedometer verification-needed to construct a tracking history for each target vehicle.

Each student should be exposed to the factors affecting RADAR. This will give the student some idea of the particular tendencies and limitations of RADAR regarding each of the effects it can produce. By knowing what specific actions are needed to produce an improper reading, the student will be better able to avoid such readings on actual patrol.

The trainees should evaluate each other for any actions they consider inappropriate or erroneous. At the end of each turn, the driver/operator should disassemble and dismount the unit. When all of the students have had turns as driver/operator, the groups will return to the classroom.

A set of work exercises are included that may he used in this field practice segment. It contains a series of experiments that a student or group of students can conduct to determine the tendencies and limitations of a particular RADAR device. The format may be used as written or modified to meet the instructor's specific needs.

Police Traffic RADAR Work Exercises

Objective - This unit of instruction is designed to provide the student with a structured field experience that will provide first hand knowledge of traffic RADAR operational characteristics.

Exp[redacted]nts

- Tuning Fork:
  - Hold an oscillating (struck) tuning fork approximately 3 feet from the face of the traffic RADAR antenna. Is there an appropriate display on the readout? YES _____ NO _____

  - Slowly move the oscillating tuning fork towards the face of the RADAR antenna. Approximately how close to the face of the antenna does the tuning fork have to come before an appropriate reading appears on the readout display? INCHES

  - Holding an oscillating tuning fork approximately 1 inch from the antenna face, slowly move the tuning fork away. Approximately how far away from the face of the antenna must the tuning fork be moved before the appropriate reading appears on the readout display? I N C H E S

- Are the two previous measurements approximately the same (within 1 or 2 inches of each other)? _____YES - N O

- If the answer is "no", then explain why there would be a difference.

- Hold an oscillating tuning fork directly in front of the face of the antenna at a distance of approximately 1 foot. Slowly move the fork out of the main lobe of the antenna beam. Approximately how many degrees can the tuning fork be moved to the side of the beam before the display on the readout disappears? DEGREES-

Antenna Alignment

- Vertical Alignment:
  - Aim the RADAR antenna beam so that it is parallel with the surface of the roadway. Approximately how far down the roadway can the unit now first detect a full-sized passenger vehicle? - F E E T

  - Aim the antenna beam up at approximately 20° from the surface of the roadway. In this position, how far down the roadway can the unit now first detect a full-sized passenger vehicle? - F E E T_____

  - Aim the antenna beam up at approximately 40° from the surface of the roadway. In this position, how far down the roadway can the unit now first detect a full-sized passenger vehicle? -FEET

  - Aim the antenna beam down at approximately 20° to the surface of the roadway. In this position, how far down the roadway can the unit now first detect a full-sized passenger vehicle? -FEET

Horizontal Alignment-Stationary RADAR

- This experiment requires the use of both the RADAR instrument and a motor vehicle. The RADAR instrument is to be operated as stationary RADAR.

  - Aim the antenna straight down the road. The target vehicle is to be accelerated to 50 mph (according to that vehicles speedometer). At this point, record the reading on your display. ____MPH

  - Now repeat this experiment with the RADAR antenna misaligned approximately 10 degrees. What is the reading displayed? ____MPH

- Are the two previous measurements approximately the same (within 1 or 2 inches of each other)? _____YES - N O

- If the answer is "no", then explain why there would be a difference.

- Hold an oscillating tuning fork directly in front of the face of the antenna at a distance of approximately 1 foot. Slowly move the fork out of the main lobe of the antenna beam. Approximately how many degrees can the tuning fork be moved to the side of the beam before the display on the readout disappears? DEGREES-

Antenna Alignment

- Vertical Alignment:
  - Aim the RADAR antenna beam so that it is parallel with the surface of the roadway. Approximately how far down the roadway can the unit now first detect a full-sized passenger vehicle? - F E E T

  - Aim the antenna beam up at approximately 20° from the surface of the roadway. In this position, how far down the roadway can the unit now first detect a full-sized passenger vehicle? - F E E T_____

  - Aim the antenna beam up at approximately 40° from the surface of the roadway. In this position, how far down the roadway can the unit now first detect a full-sized passenger vehicle? -FEET

  - Aim the antenna beam down at approximately 20° to the surface of the roadway. In this position, how far down the roadway can the unit now first detect a full-sized passenger vehicle? -FEET

Horizontal Alignment-Stationary RADAR

- This experiment requires the use of both the RADAR instrument and a motor vehicle. The RADAR instrument is to be operated as stationary RADAR.

  - Aim the antenna straight down the road. The target vehicle is to be accelerated to 50 mph (according to that vehicles speedometer). At this point, record the reading on your display. ____MPH

  - Now repeat this experiment with the RADAR antenna misaligned approximately 10 degrees. What is the reading displayed? ____MPH

Keep repeating the experiment, successively misaligning the RADAR antenna 10° further out-of-true until the antenna is aimed 90° (at a right angle) to the oncoming target vehicle. The target vehicle, meanwhile, should make each pass at 50 mph. What are the readings (if any) for each successive misalignment?

DEGREES		DEGREES	
20	_____ MPH	60	_____ MPH
30	_____ MPH	70	_____ MPH
40	_____ MPH	80	MPH
50	_____ MPH	90	MPH

Scanning

- With the RADAR turned on, scan or point the antenna beam at the readout module. (Note: This can only be accomplished with a two-piece unit, unless you pan a hand-held unit at another hand-held unit.) Record the reading that was obtained*- - MPH

Panning

- Holding the antenna of a two-piece unit or holding a one-piece unit, pan the horizon in a fast, sweeping motion and record the effects this has on the readout in your display window. ___ MPH

Power Surge

- With the RADAR unit turned off, apply power to the unit (turn it on). Note any display that occurs as the power is applied. MPH

Audio Use

- Describe the audio (if your unit has this feature) as a target vehicle approaches your RADAR operating position and suddenly decelerates. Does the sound frequency increase or decrease, and how does it sound?

- Does a truck have a RADAR audio sound different from a motorcycle when both are going 50 mph? YES- NO,

- Describe the difference, if any: Does the Doppler audio register a person walking past or a rippling flag? YES- NO-

- Describe the sound, if any:

Notes Paw

Interference Readings

With the RADAR antenna held in your hands, check around the interior of the patrol vehicle and attempt to find areas that will produce interference or "ghost" readings. Vary the speed of your heater or defroster tans, your engine speed, etc. Watch the readout and record the readings displayed together with what caused them.

- Rewed Engine:
- Heater at Low:
- Heater at High:
- Defroster:
- Others:

Citizen's Band Radio Effect

- With someone else helping you, have a CB radio "keyed up" while its antenna is in your RADAR's beam. Have the CB set moved through the beam while keyed and observe the effects, if any, on your readout. RESULTS:

Public Band Radio Effect

- While using the RADAR to track a target vehicle, key the police radio in your patrol car. Record the effect, if any. RESULTS:

Whistling Citizen's Band Radio

- Have an assistant whistle into the microphone of a CB set that has its antenna in your RADAR's beam. RESULTS:

Experiments Specifi o RADAR

- The following three experiments require the use of a moving RADAR device, a patrol vehicle, and a target vehicle.

[redacted]tal Antenna Alignment-Moving RADAR

- With the antenna pointed straight down the road, establish a patrol-car speed of 30 mph and an approaching target-vehicle speed of 40 mph. Record the reading on your RADAR displays.

- 0 degrees Patrol speed: mph. Target speed: mph.

- Repeat the experiment with the antenna misaligned approximately 10$. What are the readings displayed?

- 10 degrees Patrol speed: mph. Target speed: mph.

Interference Readings

With the RADAR antenna held in your hands, check around the interior of the patrol vehicle and attempt to find areas that will produce interference or "ghost" readings. Vary the speed of your heater or defroster tans, your engine speed, etc. Watch the readout and record the readings displayed together with what caused them.

- Rewed Engine:
- Heater at Low:
- Heater at High:
- Defroster:
- Others:

Citizen's Band Radio Effect

- With someone else helping you, have a CB radio "keyed up" while its antenna is in your RADAR's beam. Have the CB set moved through the beam while keyed and observe the effects, if any, on your readout. RESULTS:

Public Band Radio Effect

- While using the RADAR to track a target vehicle, key the police radio in your patrol car. Record the effect, if any. RESULTS:

Whistling Citizen's Band Radio

- Have an assistant whistle into the microphone of a CB set that has its antenna in your RADAR's beam. RESULTS:

Experiments Specifi o RADAR

- The following three experiments require the use of a moving RADAR device, a patrol vehicle, and a target vehicle.

[redacted]tal Antenna Alignment-Moving RADAR

- With the antenna pointed straight down the road, establish a patrol-car speed of 30 mph and an approaching target-vehicle speed of 40 mph. Record the reading on your RADAR displays.

- 0 degrees Patrol speed: mph. Target speed: mph.

- Repeat the experiment with the antenna misaligned approximately 10$. What are the readings displayed?

- 10 degrees Patrol speed: mph. Target speed: mph.

- Keep repeating the experiment, successively misaligning the RADAR antenna 10° or more until the antenna is aimed 90° (at a right angle) to the approaching target vehicle. The target vehicle should make each pass at 40 mph. What are the readings, if any, for each successive misalignment?

- 20 degrees Patrol speed mph. Target speed: mph.
- 30 degrees Patrol speed: mph. Target speed: mph.
- 40 degrees Patrol speed: mph. Target speed: mph.
- 50 degrees Patrol speed: mph. Target speed: mph.
- 60 degrees Patrol speed: mph. Target speed: mph.
- 70 degrees Patrol speed: mph. Target speed: mph.
- 80 degrees Patrol speed: mph. Target speed: mph.
- 90 degrees Patrol speed: mph. Target speed: mph.

Batching Effect

Because of the stress placed on the motor vehicle and the fuel required to produce the batching effect, it is recommended that this experiment be conducted only once. It would also be helpful in this experiment to have a partner to assist you. Rapidly accelerate the patrol car and continuously monitor the speedometer reading. Note the difference in speeds between the vehicle speedometer and the patrol ("VERIFY") display on a moving RADAR unit as you "floor it." Note: This exercise can be duplicated using a stationary RADAR unit, but the batching effect concerns only moving RADARs. As you "floor it," record the readouts on the RADAR display as your calibrated speedometer shows 25 mph and 40 mph. While batching can occur under heavy deceleration, you will not be experimenting with this effect. However: If batching did occur while you were slamming on the brakes, what would be the effect on the target speed displayed by the RADAR? Check one:

- Higher than true speed:
- Lower than true speed:
- Explain your reasoning:

Shadowing

- Individual RADAR units will vary in their susceptibility to this effect. Attempt to create the shadowing effect with your department's RADAR. A shadowing effect can sometimes be achieved by accelerating up to or past a large vehicle, such as a truck, that is moving in the same direction you are. Describe the circumstances that create a shadowing effect and the effect that was produced:

- Keep repeating the experiment, successively misaligning the RADAR antenna 10° or more until the antenna is aimed 90° (at a right angle) to the approaching target vehicle. The target vehicle should make each pass at 40 mph. What are the readings, if any, for each successive misalignment?

- 20 degrees Patrol speed mph. Target speed: mph.
- 30 degrees Patrol speed: mph. Target speed: mph.
- 40 degrees Patrol speed: mph. Target speed: mph.
- 50 degrees Patrol speed: mph. Target speed: mph.
- 60 degrees Patrol speed: mph. Target speed: mph.
- 70 degrees Patrol speed: mph. Target speed: mph.
- 80 degrees Patrol speed: mph. Target speed: mph.
- 90 degrees Patrol speed: mph. Target speed: mph.

Batching Effect

Because of the stress placed on the motor vehicle and the fuel required to produce the batching effect, it is recommended that this experiment be conducted only once. It would also be helpful in this experiment to have a partner to assist you. Rapidly accelerate the patrol car and continuously monitor the speedometer reading. Note the difference in speeds between the vehicle speedometer and the patrol ("VERIFY") display on a moving RADAR unit as you "floor it." Note: This exercise can be duplicated using a stationary RADAR unit, but the batching effect concerns only moving RADARs. As you "floor it," record the readouts on the RADAR display as your calibrated speedometer shows 25 mph and 40 mph. While batching can occur under heavy deceleration, you will not be experimenting with this effect. However: If batching did occur while you were slamming on the brakes, what would be the effect on the target speed displayed by the RADAR? Check one:

- Higher than true speed:
- Lower than true speed:
- Explain your reasoning:

Shadowing

- Individual RADAR units will vary in their susceptibility to this effect. Attempt to create the shadowing effect with your department's RADAR. A shadowing effect can sometimes be achieved by accelerating up to or past a large vehicle, such as a truck, that is moving in the same direction you are. Describe the circumstances that create a shadowing effect and the effect that was produced:

Specific Safety Considerations -

- Stationary RADAR operations:
  - the site must provide enough space so that the stationary patrol vehicle will not impede the normal flow of traffic,
  - the site must provide the RADAR operator sufficient visibility to monitor traffic,
  - the site must provide the patrol vehicle operator sufficient visibility and space to safely enter traffic,
  - the site must provide sufficient visibility to allow the radar operator to develop a complete tracking history.
- Moving RADAR operations:
  - the site must provide the RADAR operator sufficient visibility to monitor traffic,
  - the site must provide the patrol vehicle operator with sufficient visibility of traffic and unobstructed areas sufficient for conducting pursuit turns,
  - the site must provide sufficient visibility to allow the radar operator to develop a complete tracking history.
- Violator safety considerations:
  - the RADAR operator should choose a location to initiate the violator traffic stop that will provide sufficient space for the violator's vehicle and patrol vehicle to prevent;

    a. an unsafe situation for the violator and law enforcement officer(s), and/or,

    b. an impediment to the normal flow of traffic.

Site enforcement considerations - RADAR operators should justify the site selected for RADAR operations based upon a demonstrated need for speed enforcement. Factors that should be considered in selecting a site include:

- Traffic collision index - a location where a significant number of traffic collisions occur in which excessive speed was a contributing circumstance.
- Violator index - a location where there has been a high incidence of speed violations in the past.
- Complaint index - a location where a significant numbers of citizen complaints have been received.
- Specific locations - a location where there are special speed regulations or other unique traffic characteristics that necessitate selective or special speed enforcement (e.g., school zones, construction sites, etc.).
- Surveys - a location where there is a need for conducting speed surveys to facilitate traffic planning or allocation of resources.

Specific Safety Considerations -

- Stationary RADAR operations:
  - the site must provide enough space so that the stationary patrol vehicle will not impede the normal flow of traffic,
  - the site must provide the RADAR operator sufficient visibility to monitor traffic,
  - the site must provide the patrol vehicle operator sufficient visibility and space to safely enter traffic,
  - the site must provide sufficient visibility to allow the radar operator to develop a complete tracking history.
- Moving RADAR operations:
  - the site must provide the RADAR operator sufficient visibility to monitor traffic,
  - the site must provide the patrol vehicle operator with sufficient visibility of traffic and unobstructed areas sufficient for conducting pursuit turns,
  - the site must provide sufficient visibility to allow the radar operator to develop a complete tracking history.
- Violator safety considerations:
  - the RADAR operator should choose a location to initiate the violator traffic stop that will provide sufficient space for the violator's vehicle and patrol vehicle to prevent;

    a. an unsafe situation for the violator and law enforcement officer(s), and/or,

    b. an impediment to the normal flow of traffic.

Site enforcement considerations - RADAR operators should justify the site selected for RADAR operations based upon a demonstrated need for speed enforcement. Factors that should be considered in selecting a site include:

- Traffic collision index - a location where a significant number of traffic collisions occur in which excessive speed was a contributing circumstance.
- Violator index - a location where there has been a high incidence of speed violations in the past.
- Complaint index - a location where a significant numbers of citizen complaints have been received.
- Specific locations - a location where there are special speed regulations or other unique traffic characteristics that necessitate selective or special speed enforcement (e.g., school zones, construction sites, etc.).
- Surveys - a location where there is a need for conducting speed surveys to facilitate traffic planning or allocation of resources.

Traffic- RADAR operators should select a site where the volume of traffic will not obstruct positive target vehicle identification.

Environmental considerations:

- **Roadway -** RADAR operators should try to avoid selecting sites where excessive hills nd/or curves will provide insufficient visibility for monitoring traffic.
- **Cosine Effect -** RADAR operators should remain aware of the cosine effect when;
  - selecting a site for stationary RADAR operations that will require positioning the patrol vehicle a significant distance from the roadway,
  - selecting a site for moving RADAR operations involving a divided roadway with a significantly wide median.
- **Radio frequency interference -** In selecting a site for RADAR operations, the RADAR operator should check for the presence of radio frequency interference. If radio frequency interference is present at a level sufficient enough to produce spurious reading, RADAR operations at the site should be suspended. The RADAR operator should check for the presence of radio frequency interference at each site by monitoring the unsquelched audio tone.

NOTE: Recent Developments In Technology Have Produced Radar Devices That Will Not Display Any Speed Readings When Radio Frequency Interference Is Detected.

- Weather - inclement weather conditions (fog, sleet, rain, snow, etc.) can affect RADAR operations by;
  - reducing the operational range of the RADAR speed measuring device, and

NOTE: Inclement Weather Causes The Radar's Transmitted Signal To Be Refracted. This Will Result In The Reduction Of The Transmitted Signal's Strength Thereby Reducing The Operational Range Of The Radar Device.

  - creating traffic conditions that could be extremely dangerous during the operation of patrol vehicles as officers are attempting to overtake the potential violator's vehicle.

NOTE: At No Time Should The Radar Operator Create An Unsafe Traffic Situation For The Sake Of Issuing A Traffic Citation.

Traffic- RADAR operators should select a site where the volume of traffic will not obstruct positive target vehicle identification.

Environmental considerations:

- **Roadway -** RADAR operators should try to avoid selecting sites where excessive hills nd/or curves will provide insufficient visibility for monitoring traffic.
- **Cosine Effect -** RADAR operators should remain aware of the cosine effect when;
  - selecting a site for stationary RADAR operations that will require positioning the patrol vehicle a significant distance from the roadway,
  - selecting a site for moving RADAR operations involving a divided roadway with a significantly wide median.
- **Radio frequency interference -** In selecting a site for RADAR operations, the RADAR operator should check for the presence of radio frequency interference. If radio frequency interference is present at a level sufficient enough to produce spurious reading, RADAR operations at the site should be suspended. The RADAR operator should check for the presence of radio frequency interference at each site by monitoring the unsquelched audio tone.

NOTE: Recent Developments In Technology Have Produced Radar Devices That Will Not Display Any Speed Readings When Radio Frequency Interference Is Detected.

- Weather - inclement weather conditions (fog, sleet, rain, snow, etc.) can affect RADAR operations by;
  - reducing the operational range of the RADAR speed measuring device, and

NOTE: Inclement Weather Causes The Radar's Transmitted Signal To Be Refracted. This Will Result In The Reduction Of The Transmitted Signal's Strength Thereby Reducing The Operational Range Of The Radar Device.

  - creating traffic conditions that could be extremely dangerous during the operation of patrol vehicles as officers are attempting to overtake the potential violator's vehicle.

NOTE: At No Time Should The Radar Operator Create An Unsafe Traffic Situation For The Sake Of Issuing A Traffic Citation.

window, or the outside of the left rear window facing forward, the highest reading obtained at the driver's position was 0.003 mW/cm^2, a value that is below the ANSI limit by a factor 3,200. A 1987 study by the New Jersey Department of Environmental Protection showed that, with the antenna mounted on the dash of the vehicle, the radiation was undetectable at the driver and passenger positions.

In 1990, the Battelle Memorial Institute in Columbus, Ohio, was contracted by the Ohio Highway Patrol to assess radiation exposure from the use of radar equipment. The Battelle study found that in normal use with radar antennas mounted on the dashboard and aimed forward out the windshield, the radiation was not measurable inside the patrol vehicle compartment. Battelle concluded that the same dashboard-mounted radar units "never exceeded ANSI/OSHA limits even with the measuring device placed in close proximity with the antenna," less than six inches directly in front of the beam from the antenna lens. The Battelle report did suggest if window-mount radar units are used they should *not* be mounted inside the patrol vehicle. It was suggested that window-mount radar antennas be mounted outside the patrol vehicle in order to keep officer exposure to electromagnetic radiation "as low as reasonably achievable."

The Institute of Police Technology and Management (IPTM) of the University of North Florida in 199 1 measured radar power levels from 3 10 radar units to determine how well they met existing OSHA and ANSI standards. Testing of the units in a vehicle showed that electromagnetic radiation was imperceptible to their testing devices. Between 1982 and 1991, Michigan State University, Department of Electrical Engineering, tested 4,705 fixed-mount radar units and 295 hand-held radar units. They conclude, "Because of this standard [ANSI] and the results of the research reported here, we are able to conclude with a high degree of certainty that there is no evidence to support the allegation that police traffic radar operators are at risk due to prolonged exposure to microwave emissions from their radar units."

After reviewing these studies, the Federal Drug Administration (reference to Update on "Possible Hazards of Traffic Radar Devices" dated July 20, 1992 from the Public Health Service) still recommends "prudent avoidance" of exposure to electromagnetic radiation. "Prudent avoidance" simply means officers should follow proper operating procedures to protect themselves from needless exposure to activated radar antennas.

The police traffic radar beam is shown schematically in **Overhead** 18. The power density (mW/cm^2) in the area outside the 60-degree cone, located behind the antenna, has been shown to **be** less than one percent of the maximum power density at the aperture of the radar antenna. The twelve-degree cone represents a K or Ka-band beam; and the 18-degree cone represents an X-band beam. It is important to note that radiation emitted by police traffic radar antennas forms a highly directional narrow beam and radiation levels fall off very quickly with distance.

window, or the outside of the left rear window facing forward, the highest reading obtained at the driver's position was 0.003 mW/cm^2, a value that is below the ANSI limit by a factor 3,200. A 1987 study by the New Jersey Department of Environmental Protection showed that, with the antenna mounted on the dash of the vehicle, the radiation was undetectable at the driver and passenger positions.

In 1990, the Battelle Memorial Institute in Columbus, Ohio, was contracted by the Ohio Highway Patrol to assess radiation exposure from the use of radar equipment. The Battelle study found that in normal use with radar antennas mounted on the dashboard and aimed forward out the windshield, the radiation was not measurable inside the patrol vehicle compartment. Battelle concluded that the same dashboard-mounted radar units "never exceeded ANSI/OSHA limits even with the measuring device placed in close proximity with the antenna," less than six inches directly in front of the beam from the antenna lens. The Battelle report did suggest if window-mount radar units are used they should *not* be mounted inside the patrol vehicle. It was suggested that window-mount radar antennas be mounted outside the patrol vehicle in order to keep officer exposure to electromagnetic radiation "as low as reasonably achievable."

The Institute of Police Technology and Management (IPTM) of the University of North Florida in 199 1 measured radar power levels from 3 10 radar units to determine how well they met existing OSHA and ANSI standards. Testing of the units in a vehicle showed that electromagnetic radiation was imperceptible to their testing devices. Between 1982 and 1991, Michigan State University, Department of Electrical Engineering, tested 4,705 fixed-mount radar units and 295 hand-held radar units. They conclude, "Because of this standard [ANSI] and the results of the research reported here, we are able to conclude with a high degree of certainty that there is no evidence to support the allegation that police traffic radar operators are at risk due to prolonged exposure to microwave emissions from their radar units."

After reviewing these studies, the Federal Drug Administration (reference to Update on "Possible Hazards of Traffic Radar Devices" dated July 20, 1992 from the Public Health Service) still recommends "prudent avoidance" of exposure to electromagnetic radiation. "Prudent avoidance" simply means officers should follow proper operating procedures to protect themselves from needless exposure to activated radar antennas.

The police traffic radar beam is shown schematically in **Overhead** 18. The power density (mW/cm^2) in the area outside the 60-degree cone, located behind the antenna, has been shown to **be** less than one percent of the maximum power density at the aperture of the radar antenna. The twelve-degree cone represents a K or Ka-band beam; and the 18-degree cone represents an X-band beam. It is important to note that radiation emitted by police traffic radar antennas forms a highly directional narrow beam and radiation levels fall off very quickly with distance.

There are nationally recognized performance standards for police radar. The International Association of Chiefs of Police (IACP), National Institute of Standards and Technology (NIST) and the National Highway Traffic Safety Administration (NHTSA) have established model performance specifications and testing protocols. The International Association of Chiefs of Police and NHTSA recommends that radar units be tested every one to three years or after having been repaired. These periodic tests should be conducted at one of the IACP testing laboratories. One measurement conducted during routine recertification testing is the power density produced by radar antennas. The model performance specification for this measurement sets a more conservative limit of $5mW/cm^2$ for power density. This is one half the OSHA and ANSI standard set at $10mW/cm^2$. Police Departments which submit radar units regularly for routine testing can be assured units are operating within recommended power levels. For further questions contact the IACP at (800) THE-IACP.

If a radar unit is suspected of being damaged or shows signs of rough handling, what procedures should be followed? The IACP has agreements with five universities to operate laboratories where radar tests are conducted consistent with the model minimum performance specifications. Any radar unit whose functioning is suspect should be tested at one of these five laboratories. For answers to questions concerning maintenance testing of RADAR units, contact the IACP.

It is the responsibility of the Food and Drug Administration's Center for Devices and Radiological Health to monitor for potential radiological hazards. The FDA provides a toll-free number, (800) 638-6725, to gather reports of illness which is thought to be associated with any radiological device. It is strongly encouraged that any officer who believes he/she is suffering illness from police traffic radar or other radiological device to call this number. The FDA is interested in receiving such information. It is important to note, however, the FDA recently reported, "The FDA knows of no convincing evidence of a risk of cancer or other hazards from exposure to the level and type of microwave radiation produced by police radar units. " In addition, the Occupational Safety and Health Administration (OSHA) recently reported that, "based on the information [available] and the fact that health risks from long-term exposures to electromagnetic radiation have not been demonstrated, we cannot identify a clear risk associated with the situations [describing operation of police traffic radar]. "

To ensure officer safety when using police traffic radar, safe and proper operation of radar units is recommended. Sound operating procedures includes having officers avoid unnecessary exposure to activated radar antennas.

- (A) Radar antennas, both mounted and hand held units, should be aimed only at target vehicles and *not* blocked by body parts.

There are nationally recognized performance standards for police radar. The International Association of Chiefs of Police (IACP), National Institute of Standards and Technology (NIST) and the National Highway Traffic Safety Administration (NHTSA) have established model performance specifications and testing protocols. The International Association of Chiefs of Police and NHTSA recommends that radar units be tested every one to three years or after having been repaired. These periodic tests should be conducted at one of the IACP testing laboratories. One measurement conducted during routine recertification testing is the power density produced by radar antennas. The model performance specification for this measurement sets a more conservative limit of $5mW/cm^2$ for power density. This is one half the OSHA and ANSI standard set at $10mW/cm^2$. Police Departments which submit radar units regularly for routine testing can be assured units are operating within recommended power levels. For further questions contact the IACP at (800) THE-IACP.

If a radar unit is suspected of being damaged or shows signs of rough handling, what procedures should be followed? The IACP has agreements with five universities to operate laboratories where radar tests are conducted consistent with the model minimum performance specifications. Any radar unit whose functioning is suspect should be tested at one of these five laboratories. For answers to questions concerning maintenance testing of RADAR units, contact the IACP.

It is the responsibility of the Food and Drug Administration's Center for Devices and Radiological Health to monitor for potential radiological hazards. The FDA provides a toll-free number, (800) 638-6725, to gather reports of illness which is thought to be associated with any radiological device. It is strongly encouraged that any officer who believes he/she is suffering illness from police traffic radar or other radiological device to call this number. The FDA is interested in receiving such information. It is important to note, however, the FDA recently reported, "The FDA knows of no convincing evidence of a risk of cancer or other hazards from exposure to the level and type of microwave radiation produced by police radar units. " In addition, the Occupational Safety and Health Administration (OSHA) recently reported that, "based on the information [available] and the fact that health risks from long-term exposures to electromagnetic radiation have not been demonstrated, we cannot identify a clear risk associated with the situations [describing operation of police traffic radar]. "

To ensure officer safety when using police traffic radar, safe and proper operation of radar units is recommended. Sound operating procedures includes having officers avoid unnecessary exposure to activated radar antennas.

- (A) Radar antennas, both mounted and hand held units, should be aimed only at target vehicles and *not* blocked by body parts.

- (B) To increase range, radar antennas, both mounted and hand held, should be operated outside police vehicles. If operated inside, stationary radar antennas should be securely mounted and aimed out the front windshield or rear window. Hand held units, when not being operated, must also be secured, because an untethered radar unit may become a dangerous missile inside the passenger compartment during a crash or emergency maneuver

(NOTE: 1994 police vehicles may be equipped with front-seat passenger-side air bags. Then safe practice will require dashboards to be free of radar and other equipment).

- (C) Radar units should be turned off, or placed in "standby" mode, when not in use.

- (D) Only radar units on the IACP's Consumer Product List should be purchased.

- (E) Radar units should be tested a minimum of every one to three years, to comply with the Model Minimum Performance Specifications for Police Traffic Radar Devices (DOT HS 808-069, Jan. 1994).

- (F) Only officers who have successfully completed a certified training program in the proper use of radar should operate units.

Based on the current knowledge about microwave radiation, police traffic radar that meets the model performance specifications, and are used according to the operating procedures contained in this manual, are safe for use.

- (B) To increase range, radar antennas, both mounted and hand held, should be operated outside police vehicles. If operated inside, stationary radar antennas should be securely mounted and aimed out the front windshield or rear window. Hand held units, when not being operated, must also be secured, because an untethered radar unit may become a dangerous missile inside the passenger compartment during a crash or emergency maneuver

(NOTE: 1994 police vehicles may be equipped with front-seat passenger-side air bags. Then safe practice will require dashboards to be free of radar and other equipment).

- (C) Radar units should be turned off, or placed in "standby" mode, when not in use.

- (D) Only radar units on the IACP's Consumer Product List should be purchased.

- (E) Radar units should be tested a minimum of every one to three years, to comply with the Model Minimum Performance Specifications for Police Traffic Radar Devices (DOT HS 808-069, Jan. 1994).

- (F) Only officers who have successfully completed a certified training program in the proper use of radar should operate units.

Based on the current knowledge about microwave radiation, police traffic radar that meets the model performance specifications, and are used according to the operating procedures contained in this manual, are safe for use.

aggravated assault every 28 seconds versus one injury from a motor vehicle crash every 10 seconds **(Overhead 1).** Across the country, the economic losses annually from motor vehicle crashes is $137 Billion while losses to victims of personal and household crime was $19.2 Billion for the same period. Significantly more people are killed and seriously injured upon our roadways each year than are through criminal activity.
The 1993 FARS data further indicated that approximately 34 percent of all fatal crashes were speed related. Other data supplied by the States indicate that speed is a contributing factor in 25 percent of injury crashes and 12 percent of all police reported crashes.

The FARS data is available annually from the National Highway Traffic Safety Administration and through the NHTSA Regional Office for your State. This is an excellent source of information to update statistical data relating to causes of fatalities on a nationwide basis. Statistical data relating to your specific state or municipality may be obtained from the State Highway Safety Office, State Department of Transportation or State Police/Highway Patrol Agency.

There are three elements of driving, all of which are affected by speed. The elements and effects are as follows:

The **OPERATOR** - increased speeds tax the driver's basic capabilities, such as reaction time;

The VEHICLE - increased speeds impact on vehicle dynamics;

The **ROADWAY** (Environment) - the potential hazards of any deficiencies in the road surface (potholes, construction sites, etc.) or situational conditions resulting from weather (ice, snow, rain, fog, darkness, etc.) increase with speed.

High speed interacting with one or more of these elements can result in a crash. To grasp the dramatic impact excessive speed can have, examine the simple task of stopping a vehicle. This task incorporates the three elements previously mentioned and are, therefore, greatly affected by increased **speeds. Overhead** 19 lists the distance required to stop a vehicle at various speeds.

This **Overhead** was developed by utilizing a few basic assumptions. First, the average person has a reaction time of about 3/4 of a second. It is also assumed the average motorist is proceeding along a typical road clear of any snow, ice or other surface problems. Driving at about 20 mph, the motorist notices a hazard ahead and reacts normally. At 20 mph, the car moves 22 feet during this 3/4 of a second. With the assumption the automobile is in proper working order, an additional 20 feet of braking distance is required to bring the car to a complete stop. In total, it has taken the car 42 feet to stop.

Notes Paw

Notes Paw

Notes Paw

is said to have violated the basic **speed** law **"prima facia."** A prima facie speed limit holds that a given speed limit is valid on its face, however a valid defense may be to challenge whether the speed observed was unsafe. This means that one operating in excess of the speed limit is apparently speeding, unless the operator can establish that his/her speed, even though in excess of the applicable limit, was nevertheless reasonable under the circumstances.

An **absolute speed limit** is based on a law that simply prohibits driving faster than a specified speed, no matter what the existing conditions. Copies of the laws/ordinances applicable in the students' jurisdictions should be reviewed at this point. Students should be able to determine whether their jurisdiction has **basic, absolute, or prima facia speed limits.**

The use of police traffic radar for speed enforcement should be based upon the selective enforcement principles and used to reduce accidents or the probability of accidents. If its use is not directed towards some type of selective enforcement plan, radar based enforcement may be perceived as merely a revenue generating technique. Police radar is used to enhance the ability to efficiently and safely enforce speed laws. Its use also provides adequate evidence for the prosecution of a speeding offense.

Successful prosecution of a speeding offense requires the establishment of certain specific elements. Your state statutes should be reviewed to identify the elements necessary within your jurisdiction. The usual elements required in a speeding offense are driver identification, location, speed, and road conditions. The preceding table indicates the relationship between the elements of the speeding offense and the basic, absolute and prima facia speed laws.

Consideration should be given to your departmental policies and state statutes to determine what type of enforcement action to take. The action could be a verbal warning, written warning, written summons (citation) or physical arrest. Reference is also made to the Manual of Model Police Traffic Services, Policy and Procedures developed by the ***International Association of Chiefs of Police,*** which contains a model policy on the enforcement of traffic violations.

Notes Page

Notes Page

Notes Page

6A LEGAL CONSIDERATIONS

Objective:

- Provide the instructor/trainee with the information necessary to establish an understanding of laws, court rulings, policies, and practices affecting RADAR speed measurement and speed enforcement in general.

- The instructor/trainee will identify the key legal considerations regarding RADAR usage and list the major points of each decision.

- The instructor/trainee will identify the exact burden of proof for RADAR cases in their jurisdiction.

To successfully prosecute a speeding offense, it is necessary to establish a solid foundation for the RADAR. This foundation will vary in each jurisdiction, therefore it is important that the foundation necessary within a specific jurisdiction be identified.

The first element is to determine the statutes or decisions that relate to RADAR enforcement in your jurisdiction. Within some jurisdictions a court may or may not have recognized the principles upon which RADAR is based. If not, the reliability of the instrument or technology may be given via expert testimony. However, it is far more common to have established reliability through "judicial notice." Student-operators should understand that judicial notice means a situation where courts accept or recognize the existence or truth of certain facts without the production of expert testimony.

It is important for the instructor to be able to cite the instances of judicial notice of the principles of various kinds of RADAR and speed measurement equipment. It is recommended that the RADAR instructor prepare a table of cases that provide this notice and others that relate to the specific jurisdiction.

SAMPLES OF CASES FROM VARIOUS STATES

State of New Jersey v. Dominick Dantonio 115 A2d 35; 49 ALR2d 460.

NJ, 1955
Stationary Radar
Judicial Notice of Doppler Principle

State of Connecticut v. Michael R. Tomanelli 216 A2d 625 (1966)

6A LEGAL CONSIDERATIONS

Objective:

- Provide the instructor/trainee with the information necessary to establish an understanding of laws, court rulings, policies, and practices affecting RADAR speed measurement and speed enforcement in general.

- The instructor/trainee will identify the key legal considerations regarding RADAR usage and list the major points of each decision.

- The instructor/trainee will identify the exact burden of proof for RADAR cases in their jurisdiction.

To successfully prosecute a speeding offense, it is necessary to establish a solid foundation for the RADAR. This foundation will vary in each jurisdiction, therefore it is important that the foundation necessary within a specific jurisdiction be identified.

The first element is to determine the statutes or decisions that relate to RADAR enforcement in your jurisdiction. Within some jurisdictions a court may or may not have recognized the principles upon which RADAR is based. If not, the reliability of the instrument or technology may be given via expert testimony. However, it is far more common to have established reliability through "judicial notice." Student-operators should understand that judicial notice means a situation where courts accept or recognize the existence or truth of certain facts without the production of expert testimony.

It is important for the instructor to be able to cite the instances of judicial notice of the principles of various kinds of RADAR and speed measurement equipment. It is recommended that the RADAR instructor prepare a table of cases that provide this notice and others that relate to the specific jurisdiction.

SAMPLES OF CASES FROM VARIOUS STATES

State of New Jersey v. Dominick Dantonio 115 A2d 35; 49 ALR2d 460.

NJ, 1955
Stationary Radar
Judicial Notice of Doppler Principle

State of Connecticut v. Michael R. Tomanelli 216 A2d 625 (1966)

State of Wisconsin v. Lawrence I. Hanson (1978)

WI, Sup Ct, 1978
Moving radar MR-7
Judicial notice of a particular model improper
Five standards must be met to establish prima facie moving radar case: 1) Operator adequately trained and experienced in radar use, 2) radar in question must be in proper working order, checked by forks prior to and after alleged violation, 3) radar must have been used in area of minimal interference, 4) radar patrol speed display must be verified through cross-checking with vehicle's speedometer, and 5) vehicle speedometer must have been independently checked for accuracy.

State of Florida v. Ana Aquilera, et. al. (1979)

FL, Dade, 1979, 80 cases consolidated
A traffic case, not a precedent but widely publicized
Judge Nesbitt ruled radar may have delivered false readings based on weight of the evidence.
Later laboratory testing by NBS disclosed that each of the effects described in the case were either identifiable by a knowledgeable operator, or were unable to be duplicated by technicians.

People v. Ferency (133 MICH APP 526 - 1984)

Michigan's first judicial notice accepting the scientific reliability of the Doppler Principle. Michigan radar operators are not required to present scientific evidence to prove the validity of the principle. Additionally, the Court set out seven guidelines to be met in order to allow moving radar readings being entered into evidence: 1) adequate officer training and experience, 2) device in proper working condition and installation at time of citation, 3) device used in an area with a minimum of distortion, 4) input speed of the vehicle was verified and speedometer was independently calibrated, 5) pre-post shift testing are identical and device is serviced as recommended by maker, 6) operator be able to establish that the target vehicle was within the operational area of the beam at the time the reading was displayed, and 7) the particular unit has been certified for use by an agency with some demonstrable expertise in the area. Further, the Court stated that the guidelines will be deemed to be met when the issuing officer followed the recommendations established by the Michigan Office of Highway Safety Planning (OHSP).

It is also important to cite the legal basis for documentary evidence of the operator's certification or qualification. Some states have this clearly established in statutes. Others do so through cases on point. The instructor must be able to understand clearly the basis

for qualification (certification, experience, testimony, training, etc.) of operator credentials by the Court.

Another element in establishing the credibility of RADAR testimony will be found in documentation of procedures to "calibrate" or test the equipment both before and after the arrest. Generally, documentation of the before and after testing of the technology has been sufficient to prove proper operation of the technology, but there may be instances in a State where the procedure may be less stringent or even more so. In the latter case, there may be case law or even judicial notice that such testing should take place more frequently than at the beginning and end of a shift. Rather, testing should be performed in another manner such as after **each** arrest.

A final foundation for the qualification of an operator's testimony is found in the procedure used by the officer in operating the equipment. The instructor should be prepared to cite State cases relevant to testimony concerning actions taken in following a procedure, checklist, or training regime to operate the equipment in conformance with training or official procedure. Individual state cases should be cited here.

It may be necessary to establish the validity of testing procedures in a manner accepted by state courts. The use of Tuning fork and speedometer certification are not elements of an offense and therefore do not rise to the same level of proof. However, there may be state cases on point and these should be incorporated into the instructor's materials.

1 .**Speed** in excess of the posted or statutory limit may be proven by the officer's visual estimate of the target vehicle's speed based upon his training and experience. If so, cite relevant cases.

2.**Speeding** may be a "per se" or absolute offense of strict liability under state law. There may be no need to prove intent. If so, point out to students-operators.

3.**Supportive** and foundational evidence may not be held to a standard of "beyond a reasonable doubt", but to a lesser standard of "clear and convincing" or "preponderance of the evidence". If so, this should be pointed out to the student-operators with cite of relevant statute or case law.

4.**Operator** training may be satisfied through documentary evidence such as a RADAR operators current and valid certification or authorization to operate the specific equipment, if relevant in state.

5.**Proof** that the instrument or technology was functioning properly at the time of the offense may be satisfied by documenting the before and after tests, **see Overhead 20.**

for qualification (certification, experience, testimony, training, etc.) of operator credentials by the Court.

Another element in establishing the credibility of RADAR testimony will be found in documentation of procedures to "calibrate" or test the equipment both before and after the arrest. Generally, documentation of the before and after testing of the technology has been sufficient to prove proper operation of the technology, but there may be instances in a State where the procedure may be less stringent or even more so. In the latter case, there may be case law or even judicial notice that such testing should take place more frequently than at the beginning and end of a shift. Rather, testing should be performed in another manner such as after **each** arrest.

A final foundation for the qualification of an operator's testimony is found in the procedure used by the officer in operating the equipment. The instructor should be prepared to cite State cases relevant to testimony concerning actions taken in following a procedure, checklist, or training regime to operate the equipment in conformance with training or official procedure. Individual state cases should be cited here.

It may be necessary to establish the validity of testing procedures in a manner accepted by state courts. The use of Tuning fork and speedometer certification are not elements of an offense and therefore do not rise to the same level of proof. However, there may be state cases on point and these should be incorporated into the instructor's materials.

1 .**Speed** in excess of the posted or statutory limit may be proven by the officer's visual estimate of the target vehicle's speed based upon his training and experience. If so, cite relevant cases.

2.**Speeding** may be a "per se" or absolute offense of strict liability under state law. There may be no need to prove intent. If so, point out to students-operators.

3.**Supportive** and foundational evidence may not be held to a standard of "beyond a reasonable doubt", but to a lesser standard of "clear and convincing" or "preponderance of the evidence". If so, this should be pointed out to the student-operators with cite of relevant statute or case law.

4.**Operator** training may be satisfied through documentary evidence such as a RADAR operators current and valid certification or authorization to operate the specific equipment, if relevant in state.

5.**Proof** that the instrument or technology was functioning properly at the time of the offense may be satisfied by documenting the before and after tests, **see Overhead 20.**

6B MOOT COURT

Moot Court

Conducting a Moot Court can be a useful tool in eliminating problems relating to note taking and testimony. Although, RADAR Instructors may not testify frequently on speeding cases, they should be familiar with setting up and conducting an exercise of this type. This section is recommended for use only if there is a need.

Objectives

Provide sufficient information and opportunity for the instructor/trainee to:

- Prepare complete and effective direct testimony for RADAR cases.
- Respond properly and effectively to cross-examination.
- Familiarize student instructors with the operation of a Moot Court.

Requirements - Handout Materials

Sample case description: "John Jones" (contained in this unit).
Sample case direct testimony.
Sample case cross-examination transcript.

Additional Training Aids:

Audio tape (or videotape) presentation of sample case direct testimony and cross-examination.

Instructor Tasks

The instructor must be familiar with the structure and content of this unit, which contains the following segments:

- Introduction.
- Sample Case.
- Case Assignments.
- Case Preparation.

@Conduct of Moot Courts.

The trainees must be given ample time, following the case assignments, to prepare for their roles in the moot courts.

6B MOOT COURT

Moot Court

Conducting a Moot Court can be a useful tool in eliminating problems relating to note taking and testimony. Although, RADAR Instructors may not testify frequently on speeding cases, they should be familiar with setting up and conducting an exercise of this type. This section is recommended for use only if there is a need.

Objectives

Provide sufficient information and opportunity for the instructor/trainee to:

- Prepare complete and effective direct testimony for RADAR cases.
- Respond properly and effectively to cross-examination.
- Familiarize student instructors with the operation of a Moot Court.

Requirements - Handout Materials

Sample case description: "John Jones" (contained in this unit).
Sample case direct testimony.
Sample case cross-examination transcript.

Additional Training Aids:

Audio tape (or videotape) presentation of sample case direct testimony and cross-examination.

Instructor Tasks

The instructor must be familiar with the structure and content of this unit, which contains the following segments:

- Introduction.
- Sample Case.
- Case Assignments.
- Case Preparation.

@Conduct of Moot Courts.

The trainees must be given ample time, following the case assignments, to prepare for their roles in the moot courts.

Some trainees will present testimony before a moot court (i.e., the hypothetical situation will be that they have accused someone of a speeding violation, and that a person has contested the charge).

The trainees selected to present direct testimony will also submit to cross-examination. At the end of each moot court session, the trainees will discuss the good and bad points of the direct testimony and cross-examination.

Sample Case: John Jones

Case Description

To clarify what is expected of each trainee in this unit, conduct a sample demonstration of a moot court.

This sample case is based on the items outlined in the handout:

- The alleged speed violator is Mr. John Jones, 25 years old. He is alleged to have committed the violation while driving a 1990 Mazda Miata, registered to him.
- The violation is alleged to have occurred at 11:15 a.m., Saturday, July 18, on Interstate Highway 827.
- At the time of the alleged violation, Mr. Jones is said to have been traveling in the westbound lane of Interstate 827, approximately at milepost 57.5.
- The traffic then was light and free-flowing in both directions.
- It was, of course, daytime. The weather was clear; there was essentially no wind.
- One person other than Mr. Jones is alleged to have been in the car, namely Mr. Thomas Smith, 26 years old.
- The police officer who made the speed measurement and took the enforcement action claims that the vehicle was traveling at 80 mph. The speed limit at that location on Interstate 827 is 65 mph, and that is an absolute, rather than prima facie, speed limit.
- The officer also claims that the subject vehicle was in the left-hand westbound lane and had passed a pickup truck when the speed measurement was obtained.
- The officer claims to have observed two persons in the front seat of the subject vehicle.

This outline only summarizes what the officer claims happened; these are not established facts.

The officer must provide direct testimony to establish all necessary facts. The officer then must submit to cross-examination, during which the defense attorney will attempt to

Some trainees will present testimony before a moot court (i.e., the hypothetical situation will be that they have accused someone of a speeding violation, and that a person has contested the charge).

The trainees selected to present direct testimony will also submit to cross-examination. At the end of each moot court session, the trainees will discuss the good and bad points of the direct testimony and cross-examination.

Sample Case: John Jones

Case Description

To clarify what is expected of each trainee in this unit, conduct a sample demonstration of a moot court.

This sample case is based on the items outlined in the handout:

- The alleged speed violator is Mr. John Jones, 25 years old. He is alleged to have committed the violation while driving a 1990 Mazda Miata, registered to him.
- The violation is alleged to have occurred at 11:15 a.m., Saturday, July 18, on Interstate Highway 827.
- At the time of the alleged violation, Mr. Jones is said to have been traveling in the westbound lane of Interstate 827, approximately at milepost 57.5.
- The traffic then was light and free-flowing in both directions.
- It was, of course, daytime. The weather was clear; there was essentially no wind.
- One person other than Mr. Jones is alleged to have been in the car, namely Mr. Thomas Smith, 26 years old.
- The police officer who made the speed measurement and took the enforcement action claims that the vehicle was traveling at 80 mph. The speed limit at that location on Interstate 827 is 65 mph, and that is an absolute, rather than prima facie, speed limit.
- The officer also claims that the subject vehicle was in the left-hand westbound lane and had passed a pickup truck when the speed measurement was obtained.
- The officer claims to have observed two persons in the front seat of the subject vehicle.

This outline only summarizes what the officer claims happened; these are not established facts.

The officer must provide direct testimony to establish all necessary facts. The officer then must submit to cross-examination, during which the defense attorney will attempt to

Was the officer qualified and trained?
Did the officer make a visual observation of the violator's speed as well as an estimate of that speed based on that observation?
Was the RADAR measurement taken with the violator out in front and closest to the RADAR unit?

Direct testimony must establish each of these points as clearly as possible.
You can be sure that any left unclear will be noted by the defense attorney and used to discredit the testimony.

Sample Cross-Examination

What you are now about to (hear or see), is a typical cross-examination that might follow the direct testimony we have just heard.

Discussion:

Was the accused shown to be the driver?
Was the stopped vehicle identified as the violating vehicle?
Did the location permit vehicular access by the public?
Was the violator's speed in excess of the specified absolute limit?
Was the RADAR operating properly?
Was the RADAR's accuracy verified appropriately?
Was the officer qualified and trained?
Did the officer make a visual observation of the violator's speed as well as an estimate of that speed based on that observation?
Was the RADAR measurement taken with the violator vehicle out in front and closest to the RADAR unit?

Summary of Sample Case

Your direct testimony must always be based strictly on the facts. It is your job to prepare your testimony carefully, so that all the facts are brought out clearly and completely. When preparing your testimony, try to anticipate the points that the defense will challenge during cross-examination, so that you are prepared to respond effectively to any likely questions.

Case Assignments

Each of you will be assigned your own case (cases prepared by instructor using local ordinances and locations).

Was the officer qualified and trained?
Did the officer make a visual observation of the violator's speed as well as an estimate of that speed based on that observation?
Was the RADAR measurement taken with the violator out in front and closest to the RADAR unit?

Direct testimony must establish each of these points as clearly as possible.
You can be sure that any left unclear will be noted by the defense attorney and used to discredit the testimony.

Sample Cross-Examination

What you are now about to (hear or see), is a typical cross-examination that might follow the direct testimony we have just heard.

Discussion:

Was the accused shown to be the driver?
Was the stopped vehicle identified as the violating vehicle?
Did the location permit vehicular access by the public?
Was the violator's speed in excess of the specified absolute limit?
Was the RADAR operating properly?
Was the RADAR's accuracy verified appropriately?
Was the officer qualified and trained?
Did the officer make a visual observation of the violator's speed as well as an estimate of that speed based on that observation?
Was the RADAR measurement taken with the violator vehicle out in front and closest to the RADAR unit?

Summary of Sample Case

Your direct testimony must always be based strictly on the facts. It is your job to prepare your testimony carefully, so that all the facts are brought out clearly and completely. When preparing your testimony, try to anticipate the points that the defense will challenge during cross-examination, so that you are prepared to respond effectively to any likely questions.

Case Assignments

Each of you will be assigned your own case (cases prepared by instructor using local ordinances and locations).

Q: On Saturday, the 18th of July, did you issue a summons for a speed violation to Mr. John Jones?
"Yes, I did."

Q: Do you see that same Mr. John Jones here in the Bailey courtroom?
"Yes. That is he seated next to the defense counsel."

Q: Officer Brown, please describe in your own words the circumstances leading up to and involving your issuance of that summons to Mr. Jones.
"On the morning of Saturday, July 18, I was conducting the stationary surveillance of traffic in the westbound lane of Interstate Highway 827. I had parked my patrol vehicle on the grassy median divider, alongside the shoulder of the left-hand westbound lane, approximately at milepost 57.4. I was operating my assigned RADAR instrument as part of my traffic surveillance. The instrument is a Doppler RADAR device manufactured by Acme Scientific Instruments, Inc. The instrument was operating in a normal manner. I had conducted tests of the accuracy of the instrument when I first set up for stationary surveillance at 10:50 a.m. The external tests were performed using a certified tuning fork. The checks indicated that the instrument was working properly."

"At approximately 11:15 a.m., I observed a 1990 Mazda Miata approaching my position in the left-hand westbound lane. When the subject vehicle was approximately at milepost 57.5, one tenth of a mile from my position, I saw it pass a pickup truck that was traveling westbound in the right-hand lane. Based on my visual estimate, the subject Mazda appeared to he traveling at about 75 to 80 miles per hour after it had passed the pickup truck. The speed limit posted on Interstate 827 is 65 miles per hour. The subject vehicle remained in the left-hand lane after it had completed passing the pickup truck. When the subject vehicle was approximately 300 feet from my position, I obtained a stable reading of 80 mph on my RADAR instrument. The Doppler audio tone emitted by my RADAR instrument was steady and clear. The pitch of the audio correlated with that of a vehicle traveling at an excessive speed. At the time I made my observations and reading, the subject vehicle was the closest vehicle to my position and was out in front of other traffic. As the subject vehicle passed my position, I saw two people in the front seat. The driver appeared to he wearing a baseball-type cap and eyeglasses. The passenger appeared to be without glasses or hat."

"I pursued the subject vehicle and signaled it to stop, using my emergency lights. The driver responded quickly and pulled the subject vehicle to the right-hand shoulder. Using the loudspeaker on my patrol car, I instructed the occupants to remain inside their car. As I approached the subject vehicle, I again noted the cap and eyeglasses on the driver."

"I requested that the driver furnish his operator's license and vehicle registration. The operator's license was that of Mr. John Jones, the defendant. The photograph and descriptive information on the license matched the driver. I noted that Mr. Jones' operator's license

Q: On Saturday, the 18th of July, did you issue a summons for a speed violation to Mr. John Jones?
"Yes, I did."

Q: Do you see that same Mr. John Jones here in the Bailey courtroom?
"Yes. That is he seated next to the defense counsel."

Q: Officer Brown, please describe in your own words the circumstances leading up to and involving your issuance of that summons to Mr. Jones.
"On the morning of Saturday, July 18, I was conducting the stationary surveillance of traffic in the westbound lane of Interstate Highway 827. I had parked my patrol vehicle on the grassy median divider, alongside the shoulder of the left-hand westbound lane, approximately at milepost 57.4. I was operating my assigned RADAR instrument as part of my traffic surveillance. The instrument is a Doppler RADAR device manufactured by Acme Scientific Instruments, Inc. The instrument was operating in a normal manner. I had conducted tests of the accuracy of the instrument when I first set up for stationary surveillance at 10:50 a.m. The external tests were performed using a certified tuning fork. The checks indicated that the instrument was working properly."

"At approximately 11:15 a.m., I observed a 1990 Mazda Miata approaching my position in the left-hand westbound lane. When the subject vehicle was approximately at milepost 57.5, one tenth of a mile from my position, I saw it pass a pickup truck that was traveling westbound in the right-hand lane. Based on my visual estimate, the subject Mazda appeared to he traveling at about 75 to 80 miles per hour after it had passed the pickup truck. The speed limit posted on Interstate 827 is 65 miles per hour. The subject vehicle remained in the left-hand lane after it had completed passing the pickup truck. When the subject vehicle was approximately 300 feet from my position, I obtained a stable reading of 80 mph on my RADAR instrument. The Doppler audio tone emitted by my RADAR instrument was steady and clear. The pitch of the audio correlated with that of a vehicle traveling at an excessive speed. At the time I made my observations and reading, the subject vehicle was the closest vehicle to my position and was out in front of other traffic. As the subject vehicle passed my position, I saw two people in the front seat. The driver appeared to he wearing a baseball-type cap and eyeglasses. The passenger appeared to be without glasses or hat."

"I pursued the subject vehicle and signaled it to stop, using my emergency lights. The driver responded quickly and pulled the subject vehicle to the right-hand shoulder. Using the loudspeaker on my patrol car, I instructed the occupants to remain inside their car. As I approached the subject vehicle, I again noted the cap and eyeglasses on the driver."

"I requested that the driver furnish his operator's license and vehicle registration. The operator's license was that of Mr. John Jones, the defendant. The photograph and descriptive information on the license matched the driver. I noted that Mr. Jones' operator's license

Parks: "Had you used that type of instrument prior to that morning, Officer Brown?"

Brown: "Yes, ma'am, many times."

Parks: "Officer, have you had any special training or qualification for conducting RADAR speed measurements?"

Brown: "Yes, ma'am, I have."

Parks: "Would you please describe your qualifications and experience in RADAR speed measurement to the court?"

Brown: "I have successfully completed the Basic Training Program in RADAR Speed Measurement conducted by the Municipal Police Training Council of this State, and I hold a valid certificate of competence in RADAR instrument operation issued by the Lakeville Sheriffs Department."

Parks: "And, Officer, did you complete that Basic Training Program prior to the 18th of July?"

Brown: "Yes, ma'am, I took the course last December."

Parks: "And your certificate of competence in RADAR operation was completely valid on the morning of that Saturday, the 18th of July; is that right?"

Brown: "Yes, ma'am, completely valid."
Parks: "Officer Brown, between the time that you completed your basic RADAR training and this July 18th, approximately how much time have you spent conducting RADAR speed measurements?"

Brown: "I'd say more than 200 hours, ma'am, from last December when I had the course until Saturday, July 18."

Parks: "And were all these 200-plus working hours spent with the Acme manufactured RADAR instrument?"

Brown: "Yes, ma'am."
Parks: "All right, Officer Brown, it certainly sounds as if you were very well experienced with the RADAR instrument by Saturday, July 18th. Can you tell us where you were operating the RADAR on that morning?"

Parks: "Had you used that type of instrument prior to that morning, Officer Brown?"

Brown: "Yes, ma'am, many times."

Parks: "Officer, have you had any special training or qualification for conducting RADAR speed measurements?"

Brown: "Yes, ma'am, I have."

Parks: "Would you please describe your qualifications and experience in RADAR speed measurement to the court?"

Brown: "I have successfully completed the Basic Training Program in RADAR Speed Measurement conducted by the Municipal Police Training Council of this State, and I hold a valid certificate of competence in RADAR instrument operation issued by the Lakeville Sheriffs Department."

Parks: "And, Officer, did you complete that Basic Training Program prior to the 18th of July?"

Brown: "Yes, ma'am, I took the course last December."

Parks: "And your certificate of competence in RADAR operation was completely valid on the morning of that Saturday, the 18th of July; is that right?"

Brown: "Yes, ma'am, completely valid."
Parks: "Officer Brown, between the time that you completed your basic RADAR training and this July 18th, approximately how much time have you spent conducting RADAR speed measurements?"

Brown: "I'd say more than 200 hours, ma'am, from last December when I had the course until Saturday, July 18."

Parks: "And were all these 200-plus working hours spent with the Acme manufactured RADAR instrument?"

Brown: "Yes, ma'am."
Parks: "All right, Officer Brown, it certainly sounds as if you were very well experienced with the RADAR instrument by Saturday, July 18th. Can you tell us where you were operating the RADAR on that morning?"

Brown: "Yes, ma'am."

Parks: "So when you set up on the morning of July 18th, your RADAR instrument passed both the internal and the external tests, is that right?"

Brown: "Yes, ma'am. Both tests were passed."

Parks: "Officer Brown, in the RADAR training program you had completed, were you taught that if both the internal and external tests are passed then the RADAR instrument is working properly?"

Brown: "Yes, ma'am."

Parks: "Very good. And on that Saturday, at Highway 827, you performed those tests, and the RADAR passed those tests, at 10:50 a.m., is that right?"

Brown: "Yes, ma'am!"

Parks: "What did you do then, Officer?"

Brown: "I then began to observe westbound traffic from my stationary position near milepost 57.4."

Parks: "While you were observing traffic, did you have occasion to notice a 1990 Mazda Miata approaching your position while it was traveling in the left-hand westbound lane?"

Brown: "Yes, I did."
Parks: "About what time did you notice that vehicle?"

Brown: "It was approximately 11:15 a.m., about 25 minutes after I had first set up"

Parks: "Officer, will you please tell us what you observed concerning that particular vehicle?

Brown: "Ma'am, I observed that the subject Mazda was traveling in the left-hand westbound lane at what appeared to be a high rate of speed, faster than the normal flow of traffic. When the subject vehicle was approximately at milepost 57.5, one-tenth of a mile from my position, I watched it pass a pickup truck that was traveling westbound in the righthand lane."

Parks: "And based upon your observations, Officer Brown, as well as your experience in conducting traffic surveillance, were you able to make a visual estimate of the Mazda's speed?"

Brown: "Yes, ma'am."

Parks: "So when you set up on the morning of July 18th, your RADAR instrument passed both the internal and the external tests, is that right?"

Brown: "Yes, ma'am. Both tests were passed."

Parks: "Officer Brown, in the RADAR training program you had completed, were you taught that if both the internal and external tests are passed then the RADAR instrument is working properly?"

Brown: "Yes, ma'am."

Parks: "Very good. And on that Saturday, at Highway 827, you performed those tests, and the RADAR passed those tests, at 10:50 a.m., is that right?"

Brown: "Yes, ma'am!"

Parks: "What did you do then, Officer?"

Brown: "I then began to observe westbound traffic from my stationary position near milepost 57.4."

Parks: "While you were observing traffic, did you have occasion to notice a 1990 Mazda Miata approaching your position while it was traveling in the left-hand westbound lane?"

Brown: "Yes, I did."
Parks: "About what time did you notice that vehicle?"

Brown: "It was approximately 11:15 a.m., about 25 minutes after I had first set up"

Parks: "Officer, will you please tell us what you observed concerning that particular vehicle?

Brown: "Ma'am, I observed that the subject Mazda was traveling in the left-hand westbound lane at what appeared to be a high rate of speed, faster than the normal flow of traffic. When the subject vehicle was approximately at milepost 57.5, one-tenth of a mile from my position, I watched it pass a pickup truck that was traveling westbound in the righthand lane."

Parks: "And based upon your observations, Officer Brown, as well as your experience in conducting traffic surveillance, were you able to make a visual estimate of the Mazda's speed?"

Parks: "Did the vehicle occupants leave the vehicle at any time?"

Brown: "No, ma'am. As the subject vehicle came to a stop, I used the loudspeaker on my patrol car to tell them to stay inside the car. Then I got out of my patrol car and approached the Mazda to observe and interview the driver"

Parks: "Please tell us about the observation and interview of the driver."

Brown: "As I approached the vehicle, I noted again that the driver was wearing a baseball cap and eyeglasses. I requested the driver to furnish his operator's license and vehicle registration. The operator's license was that of a Mr. John Jones. The photograph and descriptive information on the license matched that of the driver. I noted that Mr. Jones' operator's license requires him to wear corrective lenses while driving. The registration certificate was that of a 1990 Mazda Miata, registration number 318537, registered to Mr. John Jones. The registration number and other descriptive information matched the subject vehicle."

Parks: "Officer Brown, do you see that same Mr. John Jones, whom you observed to be the driver of the Mazda, seated in this room?"

Brown: "Yes, ma'am. That is he seated next to Mr. Bailey, the defense counsel."
Parks: "Very good, Officer. And did you inform Mr. Jones of your reason for having stopped him?"

Brown: "I informed Mr. Jones that I had stopped him for speeding and that I had clocked him at 80 mph on my RADAR instrument. I then issued the summons to him and notified him of his obligations and rights concerning the summons. I then assisted him in returning to the traffic lane."

Parks: "What did you do after Mr. Jones had left the scene?"

Brown: "I returned to my original position to resume stationary surveillance. Before resuming surveillance, I repeated the tests for accuracy on my RADAR instrument and verified that it still working properly."

Parks: "You repeated those same internal and external tests that you described earlier, is that right?"

Brown: "Yes, ma'am."

Parks: "And did the instrument once again pass those tests?"

Brown: "Yes, ma'am, both tests."

Parks: "Thank you, Officer Brown. Your witness, Mr. Bailey."

The Defense Attorney Mr. Bailey: "Officer Brown, you've stated that you were stopped alongside Highway 827 working with your RADAR machine. There are a lot of telephone and power lines running along that highway, aren't there?"

Brown: "Sir, I recall that telephone lines run parallel to the highway's eastbound lanes."

Bailey: "Yes. Well, isn't it true that those lines give off some electrical or electronic signals that could be picked up by a RADAR instrument?"

Brown: "I don't know whether telephone lines could cause RADAR interference. I do know that I saw no evidence of any interference while I was operating my RADAR instrument at that time and place."

Bailey: "You say you 'don't know' whether there could have been any interference from the lines. Didn't they cover that in the RADAR training course you claim to have had?"

Brown: "Sir, our training taught us how to check for the presence of interference and how to recognize it. One way is to monitor the Doppler audio for evidence of buzzing or other inconsistent audio tones, Another is to monitor the RADAR display screen for speed readings when there is no target present. I checked for interference as I was taught to do, and I found none to be present."

Bailey: "But how do you know there wasn't any electrical interference at the moment when you supposedly were clocking Mr. Jones' speed? You couldn't have been checking for interference then. Isn't it possible that someone started to talk on the telephone about that time, and the lines sent out some electrical energy that messed up your machine?"

Brown: "Sir, as I've indicated, I found no evidence at all that there was any interference present. Also, my RADAR instrument and my patrol vehicle were quite far away from the telephone lines. I doubt that there could have been any interference."

Bailey: "You 'doubt' it, Officer Brown?"
(interrupting) But you're not really sure, are you?"

Brown: "Sir, I operated the RADAR instrument exactly as I had been trained to do. I obtained a speed measurement that agreed with my own visual estimate of the defendant's vehicle's speed."

Bailey: "All right, Officer, let's just leave it that there may have been some interference. Let's get back to this so-called visual estimate you've mentioned. How did you arrive at this guess of 75 to 80 miles per hour as Mr. Jones' speed?"

Brown: "Observing traffic is a large part of my job, sir, and I've spent a lot of time doing it. I've seen a good deal of traffic moving along Highway 827, and I've come to be able to judge pretty accurately how fast vehicles are moving. "

Bailey: "Well, at the particular time that you were 'judging' Mr. Jones, was there a lot of other traffic moving along the highway?"

Brown: "No, sir. Traffic was fairly light. "
Bailey: "If traffic was light, there couldn't have been many other vehicles whose speeds you could have compared to Mr. Jones'. Didn't that make it a bit more difficult to estimate Mr. Jones' speed?"

Brown: "Not really, no. I could still tell pretty well how fast the Jones vehicle was moving along the road. "

Bailey: "And as you said in your direct testimony, you saw Mr. Jones' car passing a pickup truck about that time, isn't that right?"

Brown: "That's right! "

Bailey: "And I suppose you used your vision and your experience to estimate the pickup's speed, too?"

Brown: "It appeared to me that the pickup was moving at just about the speed limit, around 65 miles per hour. "

Bailey:'? see. So would you say that it was the fact that Mr. Jones' car was passing the pickup truck that led you to conclude that he must have been speeding?"

Brown: "It was one of several factors and observations that confirmed my estimate of the Jones vehicle's speed. "

Bailey: "Officer, isn't it possible that the pickup was going a bit more slowly, say about 55 miles per hour, and that Mr. Jones passed it at a legal speed and that it was just because you saw a vehicle being passed that you thought you had a speeder?"

Brown: "Sir, as I've said, I estimated that the Jones vehicle was moving at 75 to 80 miles per hour and that my RADAR instrument confirmed a speed of 80. I didn't base my estimate just on the fact that he was passing the pickup truck."

Bailey: "Well, did you use your RADAR device to confirm your estimate of the pickup's speed?"

Brown: "No, sir. You see, the RADAR ---"

Bailey: "Aha! You say, 'no, you didn't!
(interrupting): Well, did you stop the pickup and ask the driver how fast he was going when you claim Mr. Jones passed him?"

Brown: "No, certainly not. There wasn't any need to, and I was starting to pursue-"
Bailey: (interrupting yet again) "So there was no confirmation of your estimate of the pickup's speed. About how far from your position was the pickup when you say it was passed by Mr. Jones?"

Brown: "Roughly one-tenth of a mile, probably a bit less. "

Bailey: "One-tenth of a mile-so about 500 feet, you'd say?"

Brown: "Just about. "

Bailey: "And would it be fair to say that, after the car passed the pickup, you pretty much concentrated your attention on the car?"

Brown: "Certainly, that's when I estimated his-"

Bailey: "So, your estimate of the pickup's speed was based on a pretty brief look when it was still pretty far away, wouldn't you say?"

Brown: "No. I'd observed both vehicles long enough to estimate their speeds. Anyway, the pickup has nothing to do with how fast the Jones vehicle was going."

Bailey: "Okay, Officer, I've just a few more questions about some other points you mentioned. You say you turned on your emergency lights to signal the vehicle to stop. How did the driver respond to your signal?"

Brown: "He responded promptly and crossed over to the right-hand shoulder and stopped his car.

Bailey: "No screeching of tires or jamming of brakes or skid marks or anything like that?"

Brown: "No, it was a normal stop."

Bailey: "Did you see him jam on his brakes or do anything of the sort before you signaled him to pull over?"

Brown: "No, sir."

Bailey: "So, he didn't do anything that would indicate to you that he thought he had been going excessively or recklessly fast?"

Brown: "I can't say what he might have been thinking."
Bailey: "After you stopped him and you walked up to him, did he say anything to you to indicate that he believed or was admitting that he was speeding?"

Brown: "No."

Bailey: "Then did he say anything to suggest that he thought he had not been speeding?"

Brown: "I recall that he made some such remarks, yes."

Bailey: "Just what did he say to you?"

Brown: "I don't recall his exact words, just something to the effect that he was certain he hadn't been going more than 65. The same kind of remarks I hear all the time."

Bailey: "Didn't he say to you, 'Officer, I was only doing 65 when I passed that truck, it was just creeping along'?"

Brown: "I don't know if that was it exactly, I mean, he may have said something like that."

Bailey: "And was he referring to that same pickup truck that you estimated was moving at, quote, 'just about the speed limit' when you saw it about 500 feet away?"

Brown: "As I say, I don't remember his exact remarks."

Bailey: "No further questions, your honor."

Bailey: "No screeching of tires or jamming of brakes or skid marks or anything like that?"

Brown: "No, it was a normal stop."

Bailey: "Did you see him jam on his brakes or do anything of the sort before you signaled him to pull over?"

Brown: "No, sir."

Bailey: "So, he didn't do anything that would indicate to you that he thought he had been going excessively or recklessly fast?"

Brown: "I can't say what he might have been thinking."
Bailey: "After you stopped him and you walked up to him, did he say anything to you to indicate that he believed or was admitting that he was speeding?"

Brown: "No."

Bailey: "Then did he say anything to suggest that he thought he had not been speeding?"

Brown: "I recall that he made some such remarks, yes."

Bailey: "Just what did he say to you?"

Brown: "I don't recall his exact words, just something to the effect that he was certain he hadn't been going more than 65. The same kind of remarks I hear all the time."

Bailey: "Didn't he say to you, 'Officer, I was only doing 65 when I passed that truck, it was just creeping along'?"

Brown: "I don't know if that was it exactly, I mean, he may have said something like that."

Bailey: "And was he referring to that same pickup truck that you estimated was moving at, quote, 'just about the speed limit' when you saw it about 500 feet away?"

Brown: "As I say, I don't remember his exact remarks."

Bailey: "No further questions, your honor."

Hands-on Practice

- Accuracy Checks
  - Tuning Fork: strike on a hard non-metal object.
  - Properly places tuning fork in front of antenna
  - Other: Lamp Test; Internal Circuity Test

- Anomalies:Demonstrate the ability to recognize anomalies when they occur.

- Antenna Alignment
  - Horizontal alignment-Stationary RADAR
  - Horizontal alignment-Moving RADAR

- Panning
- Scanning
- Power Surge
- Audio Use ***(Consider Video)***
- Interference Readings
- CB Radio Effect
- Public Band Radio Effect
- Whistling on CB Radio
- Batching Effect
- Shadowing Effect

Speed Estimation

- Establish tracking history

Violator Contact

- Setup mock exercises

Moot Court

- Courtroom Setup
- Selection of Actors
- Other

Hands-on Practice

- Accuracy Checks
  - Tuning Fork: strike on a hard non-metal object.
  - Properly places tuning fork in front of antenna
  - Other: Lamp Test; Internal Circuity Test

- Anomalies:Demonstrate the ability to recognize anomalies when they occur.

- Antenna Alignment
  - Horizontal alignment-Stationary RADAR
  - Horizontal alignment-Moving RADAR

- Panning
- Scanning
- Power Surge
- Audio Use ***(Consider Video)***
- Interference Readings
- CB Radio Effect
- Public Band Radio Effect
- Whistling on CB Radio
- Batching Effect
- Shadowing Effect

Speed Estimation

- Establish tracking history

Violator Contact

- Setup mock exercises

Moot Court

- Courtroom Setup
- Selection of Actors
- Other

Appendix A -- Overheads

1. CRIME/CRASH CLOCK
2. PERFORMANCE APPRAISAL FORM
3. PERFORMANCE APPRAISAL FORM, PART II
4. TRANSMITTED AND REFLECTED SIGNALS
5. SPECTRUM CHART
6. WAVE CONCEPT
7. COSINE EFFECT
8. COSINE EFFECT AND SPEED READINGS
9. ANGLE EFFECT AS VEHICLE APPROACHES
10. RADAR BEAM - MAIN LOBE
11. BEAM WIDTH
12. RADAR SENSITIVITY TO TARGET SHAPE
13. VEHICLE SIZE AND REFLECTIVITY
14. RANGE CONTROL
15. AUDIOTRACKING
16. NICHOLS EFFECT
17. SHADOWING
18. RADAR BEAM POWER DENSITY
19. STOPPING DISTANCES
20. RADAR LOG

Overhead #03

Officer Name _____ Evaluation Date ___/___/___

Badge No. _____ Evaluation Period ___/___/___ to ___/___/___
Start End

PERFORMANCE EVALUATION SUMMARY

FACTOR RATINGS: The ratings should be extracted from the overall rating section, for applicable Evaluative Factors.

Factors	Ratings		
	Superior	Acceptable	Unacceptable
1. Preplanning	☐	☐	☐
2. Safety Considerations	☐	☐	☐
3. Radar Setup and Demonstration	☐	☐	☐
4. Accuracy Checks	☐	☐	☐
5. Anomalies	☐	☐	☐
6. Demonstrates RFI	☐	☐	☐
7. Speed Estimation	☐	☐	☐
8. Violator Contact	☐	☐	☐

Overall rating of performance

☐ Superior ☐ Acceptable ☐ Unacceptable

Special considerations: _____

_____

_____

Narrative summary: _____

_____

_____

_____

_____

Actions/Recommendations: _____

_____

_____

Rater _____ Reviewer _____ Officer _____

NOTE: This form and these categories are supplied as an example. Instructors should develop rating forms that meet their and their agency's needs. However, the use of this format is suggested as an ideal way to assist in objective evaluation of students.

Overhead #03

Officer Name _____ Evaluation Date ___/___/___

Badge No. _____ Evaluation Period ___/___/___ to ___/___/___
Start End

PERFORMANCE EVALUATION SUMMARY

FACTOR RATINGS: The ratings should be extracted from the overall rating section, for applicable Evaluative Factors.

Factors	Ratings		
	Superior	Acceptable	Unacceptable
1. Preplanning	☐	☐	☐
2. Safety Considerations	☐	☐	☐
3. Radar Setup and Demonstration	☐	☐	☐
4. Accuracy Checks	☐	☐	☐
5. Anomalies	☐	☐	☐
6. Demonstrates RFI	☐	☐	☐
7. Speed Estimation	☐	☐	☐
8. Violator Contact	☐	☐	☐

Overall rating of performance

☐ Superior ☐ Acceptable ☐ Unacceptable

Special considerations: _____

_____

_____

Narrative summary: _____

_____

_____

_____

_____

Actions/Recommendations: _____

_____

_____

Rater _____ Reviewer _____ Officer _____

NOTE: This form and these categories are supplied as an example. Instructors should develop rating forms that meet their and their agency's needs. However, the use of this format is suggested as an ideal way to assist in objective evaluation of students.

Overhead #04

STATIONARY Object Reflects at SAME Frequency

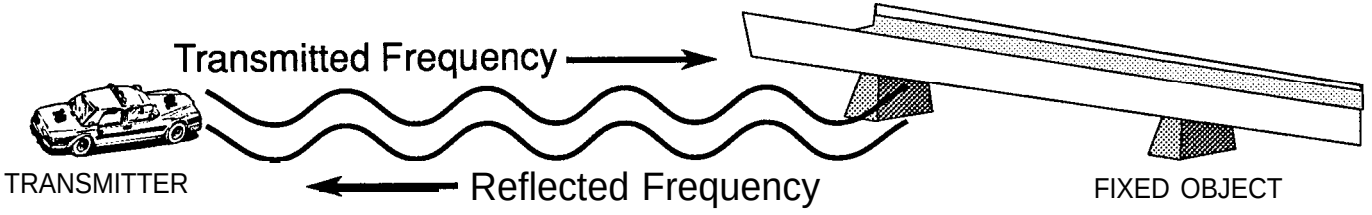

INCOMING Object Reflects at HIGHER Frequency

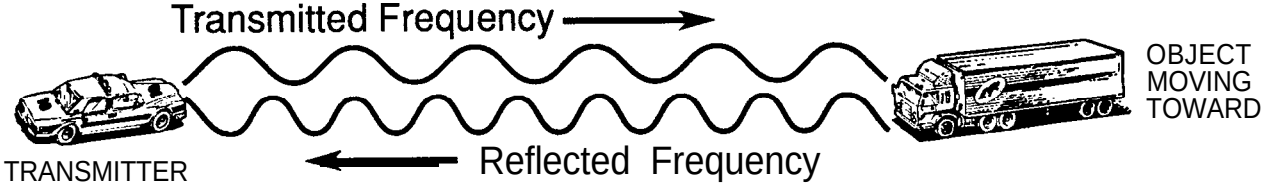

RETREATING Object Reflects at LOWER Frequency

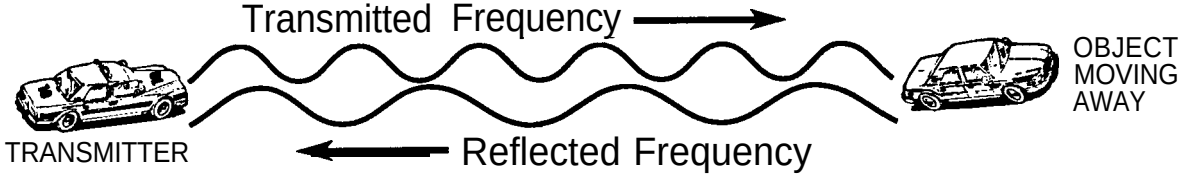

Overhead #07

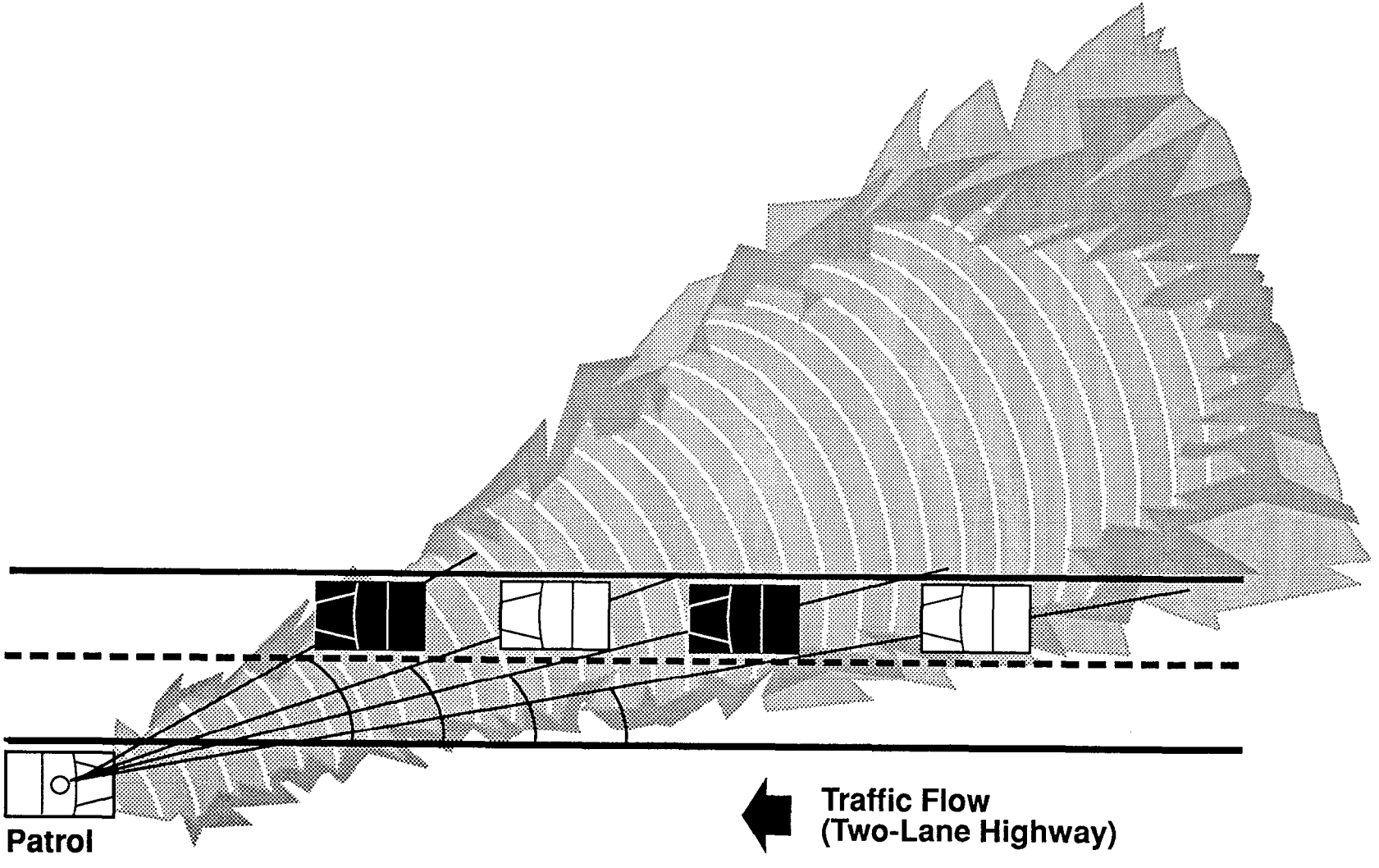

Overhead #07

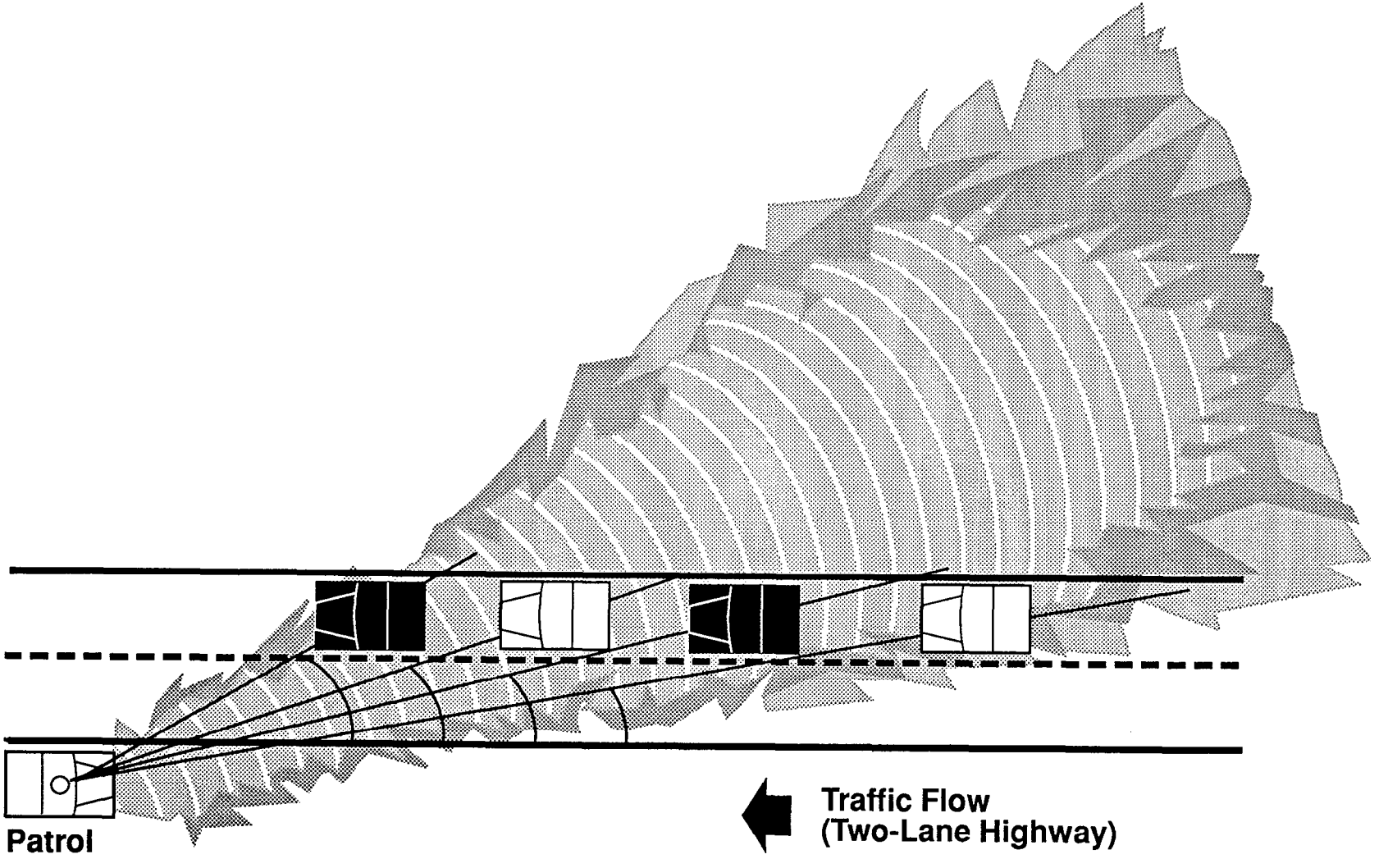

Overhead #08

True Speed as Affected by Cosine Effect

TRUE SPEED

Angle Degrees	30 mph	40 mph	50 mph	55 mph	60 mph	70 mph
0	30	40	50	55	60	70
1	29.99	39.99	49.99	54.99	59.99	69.99
3	29.96	39.94	49.93	54.92	59.92	69.90
5	29.89	39.85	49.81	54.79	59.77	69.73
10	29.54	39.39	49.24	54.16	59.09	68.94
15	28.98	38.64	48.30	53.12	57.94	67.61
20	28.19	37.59	46.99	51.68	56.38	65.78
30	25.98	34.64	43.30	47.63	51.96	60.62
45	21.21	28.28	35.36	38.89	42.43	49.50
60	15.00	20.00	25.00	27.50	30.00	35.00
90	00.00	00.00	00.00	00.00	00.00	00.00

Overhead #08

True Speed as Affected by Cosine Effect

TRUE SPEED

Angle Degrees	30 mph	40 mph	50 mph	55 mph	60 mph	70 mph
0	30	40	50	55	60	70
1	29.99	39.99	49.99	54.99	59.99	69.99
3	29.96	39.94	49.93	54.92	59.92	69.90
5	29.89	39.85	49.81	54.79	59.77	69.73
IO	29.54	39.39	49.24	54.16	59.09	68.94
15	28.98	38.64	48.30	53.12	57.94	67.61
20	28.19	37.59	46.99	51.68	56.38	65.78
30	25.98	34.64	43.30	47.63	51.96	60.62
45	21.21	28.28	35.36	38.89	42.43	49.50
60	15.00	20.00	25.00	27.50	30.00	35.00
90	00.00	00.00	00.00	00.00	00.00	00.00

Overhead #09

Angle Effect as Vehicle Approaches

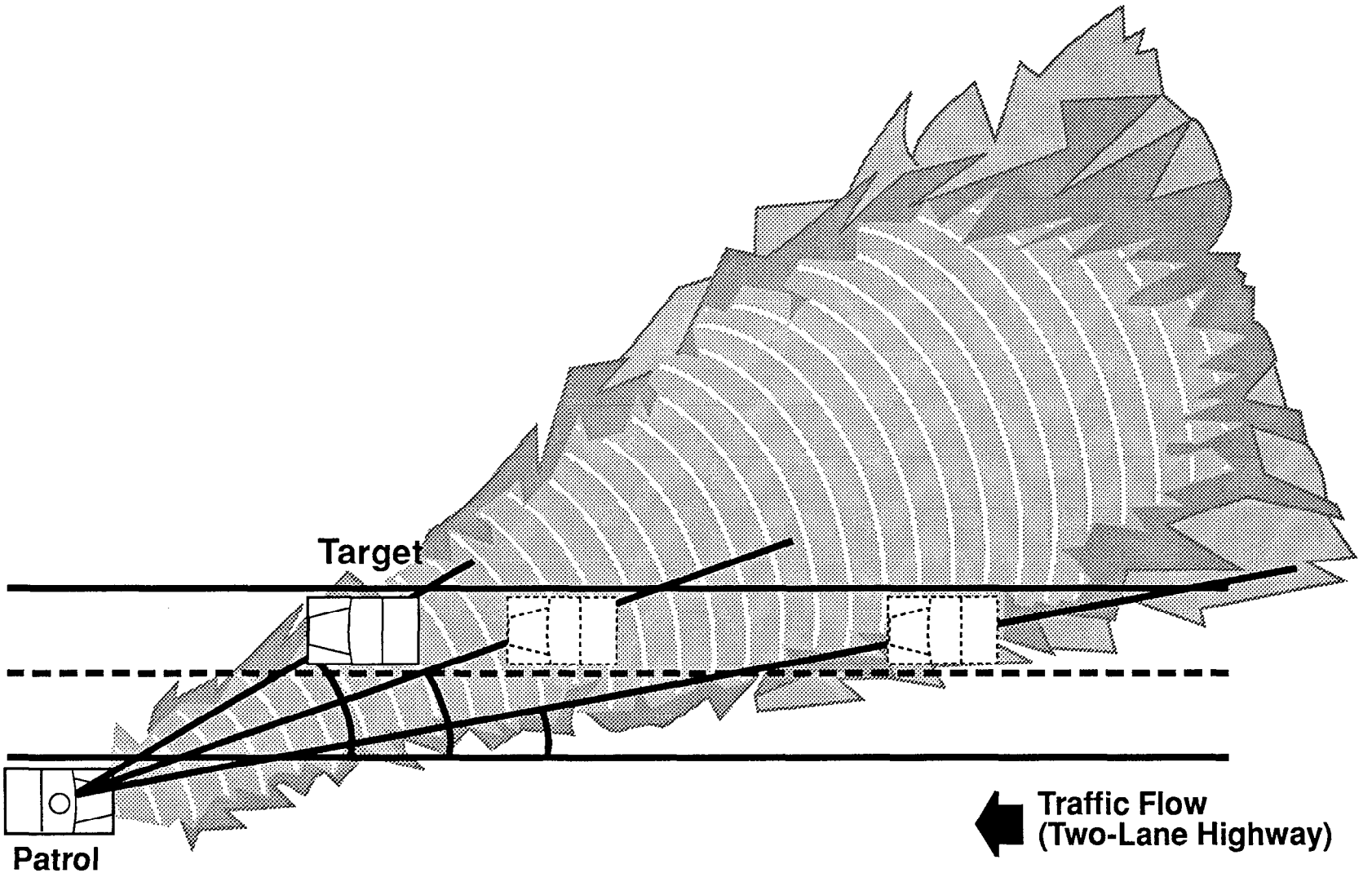

Overhead #09

Angle Effect as Vehicle Approaches

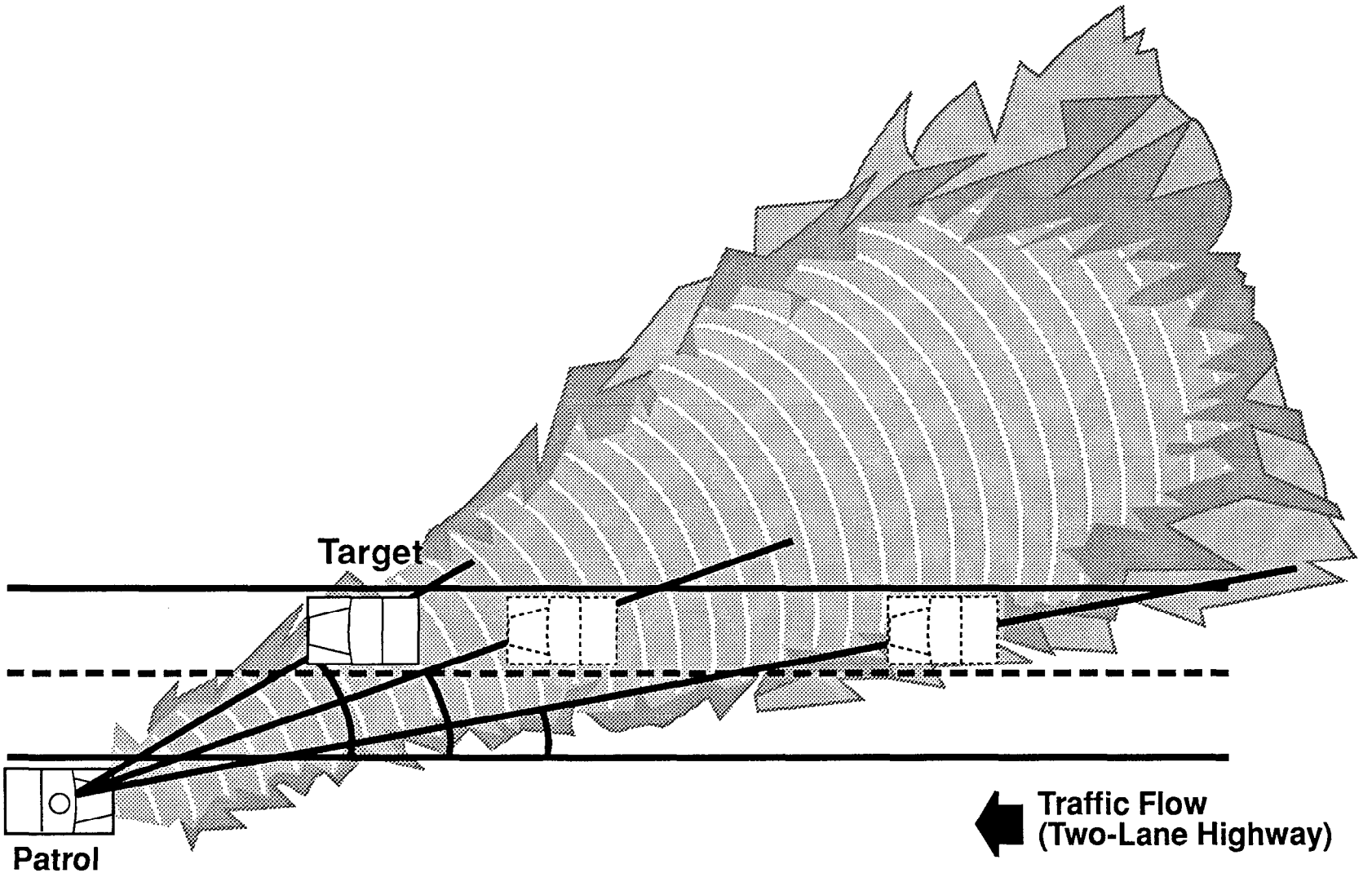

Overhead #10

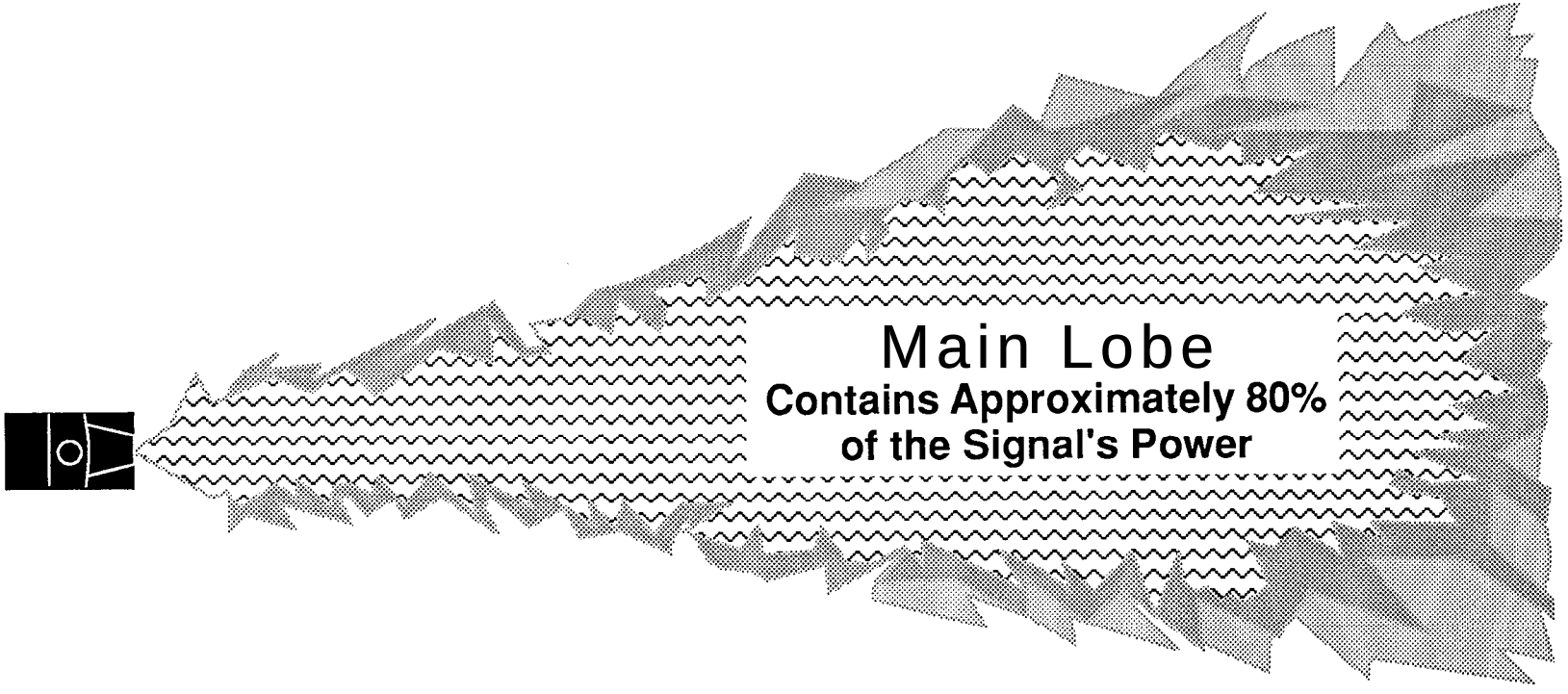

Overhead #10

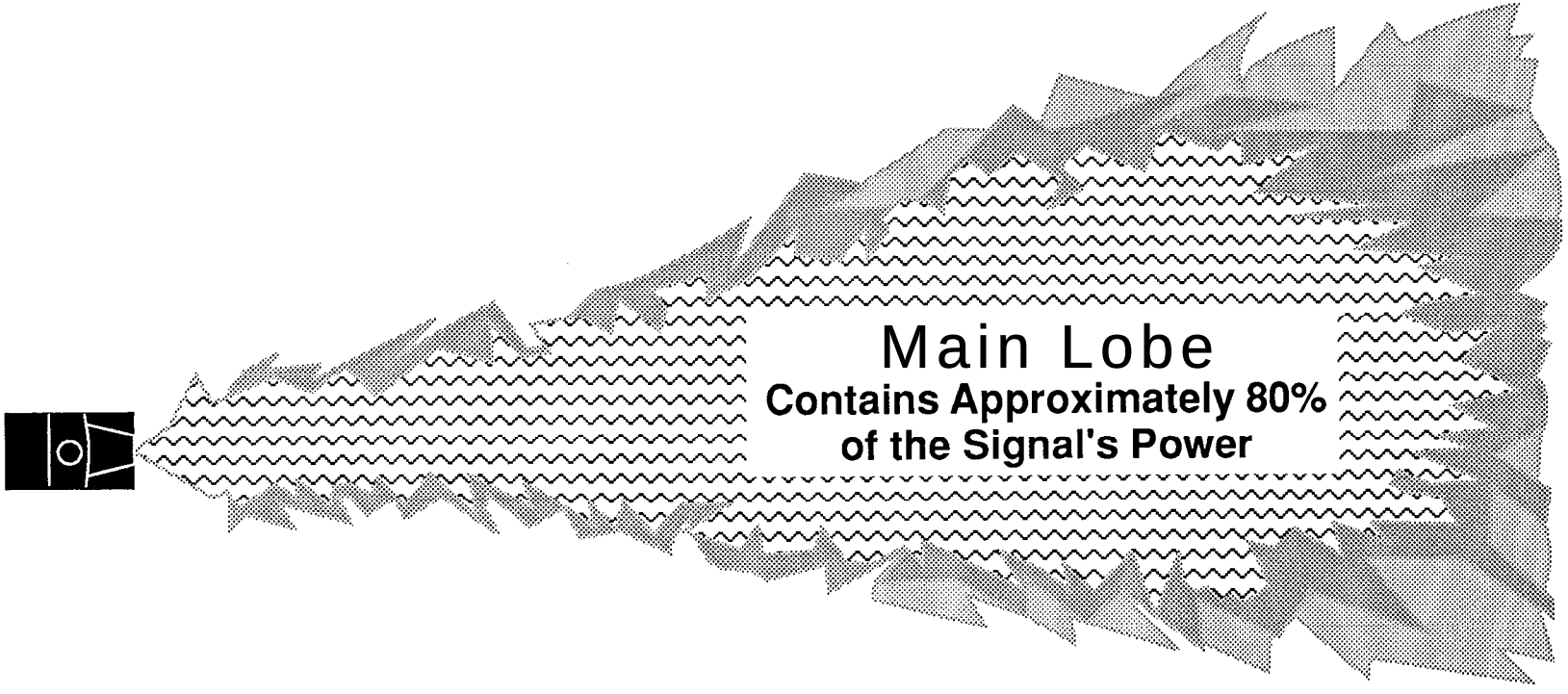

Overhead #11

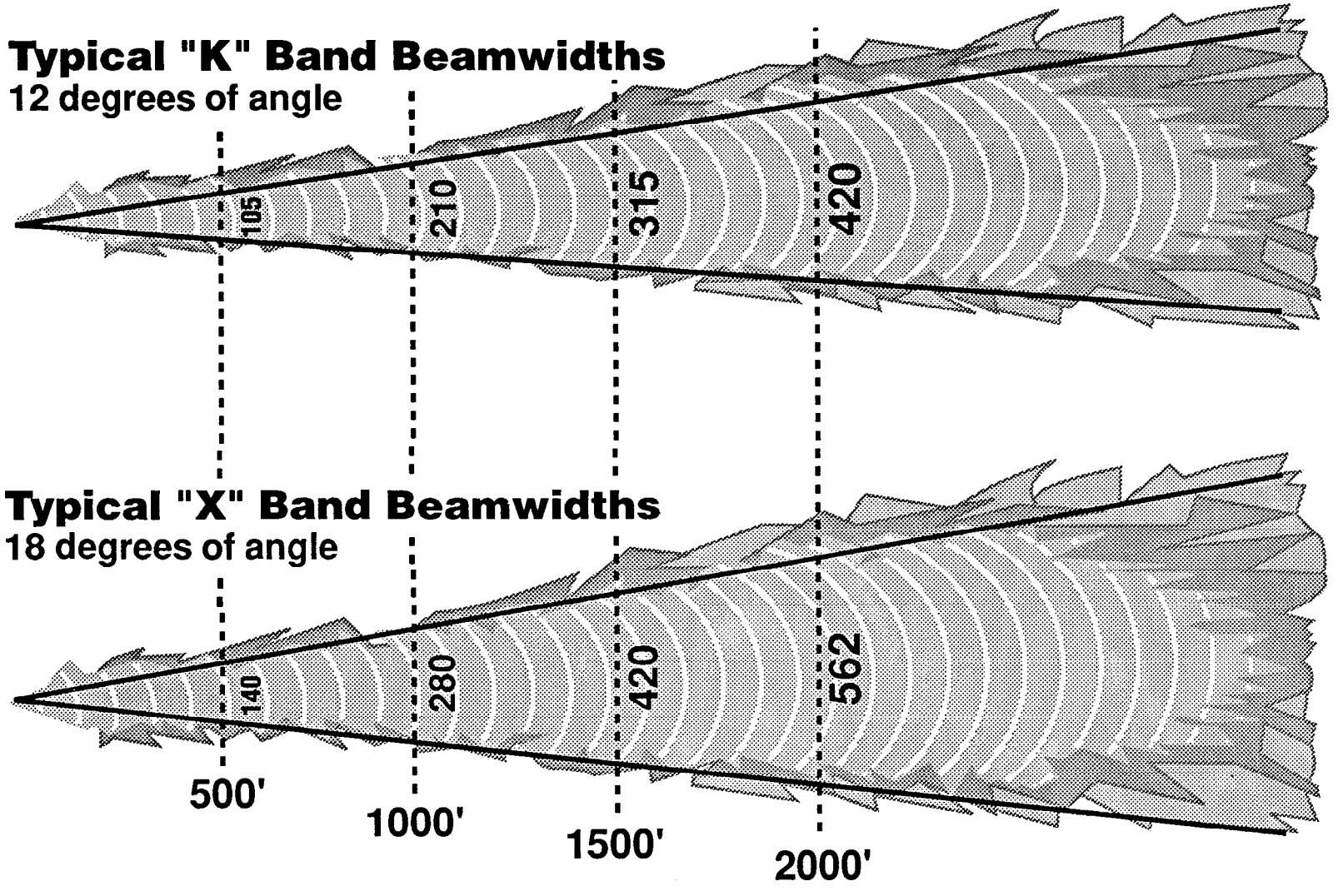
Typical "K" Band Beamwidths
12 degrees of angle
105
210
315
420
Typical "X" Band Beamwidths
18 degrees of angle
140
280
420
562
500'
1000'
1500'
2000'

Overhead #11

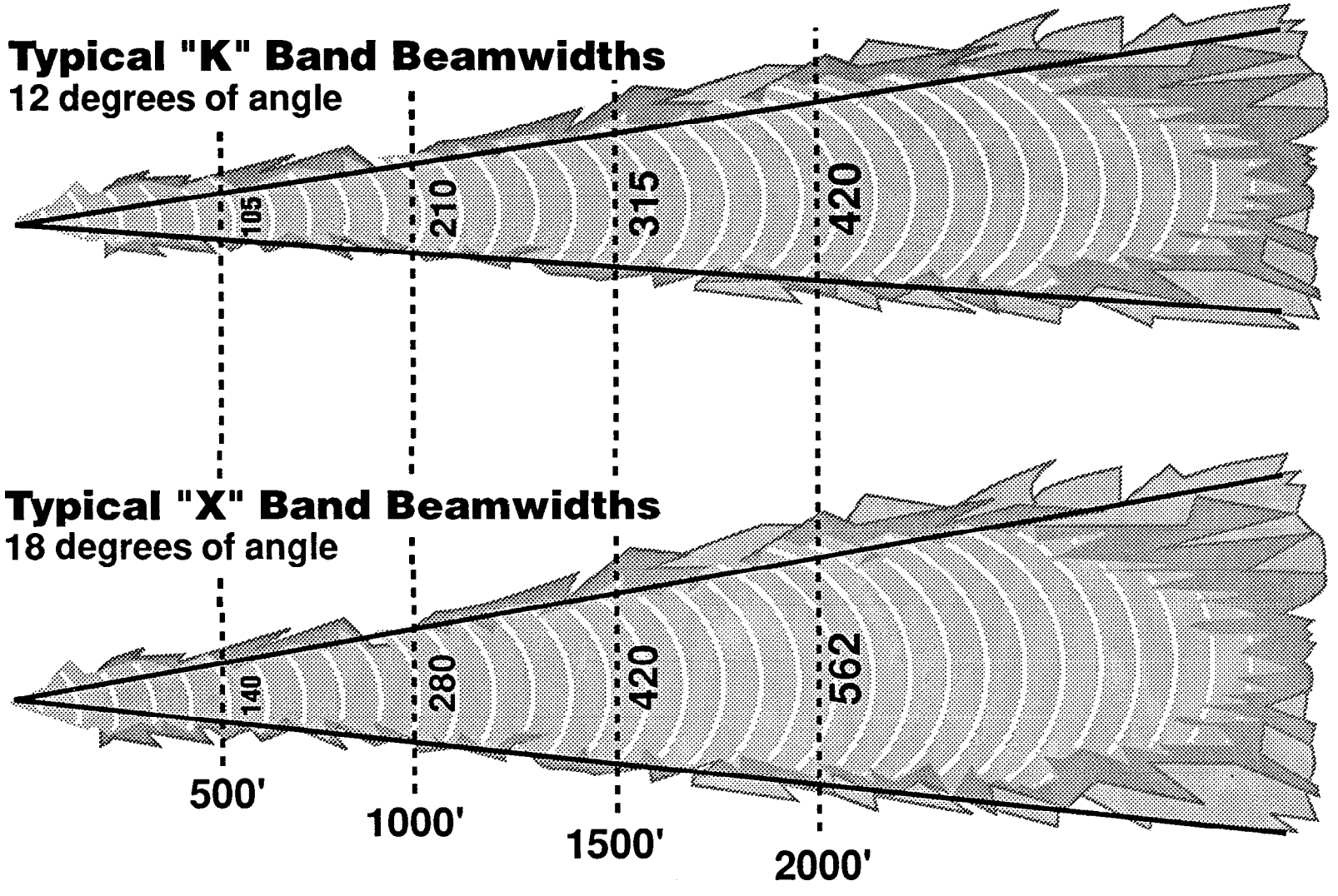
Typical "K" Band Beamwidths
12 degrees of angle
105
210
315
420
Typical "X" Band Beamwidths
18 degrees of angle
140
280
420
562
500'
1000'
1500'
2000'

Overhead #12

Radar Sensitivity: Target Shape

Flat Vertical Shapes

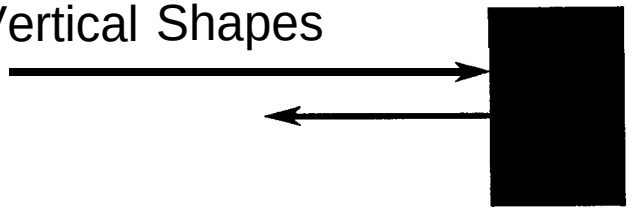

Angled or **Curved Surfaces**

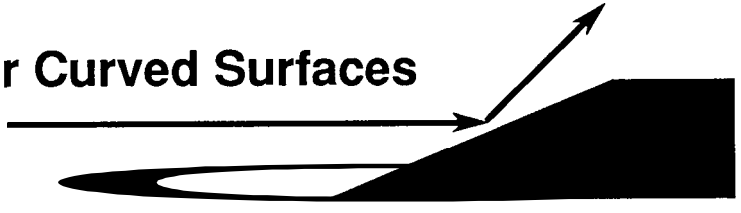

Note:
Even though a surface appears to the eye to be smooth, in reality the surface has small imperfections which will reflect a radar signal

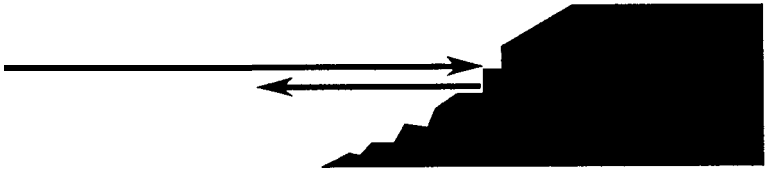

Overhead #12

Radar Sensitivity: Target Shape

Flat Vertical Shapes

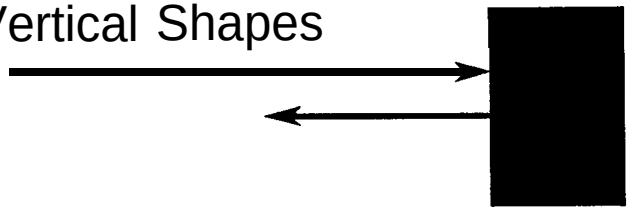

Angled or **Curved Surfaces**

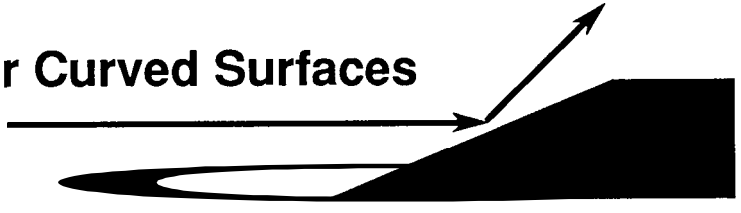

Note:
Even though a surface appears to the eye to be smooth, in reality the surface has small imperfections which will reflect a radar signal

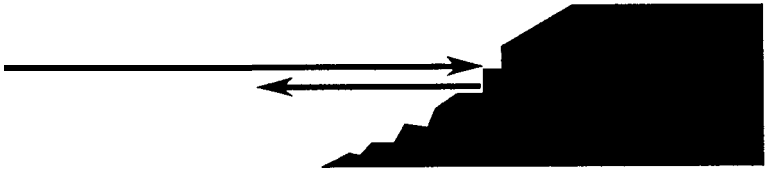

Overhead #13

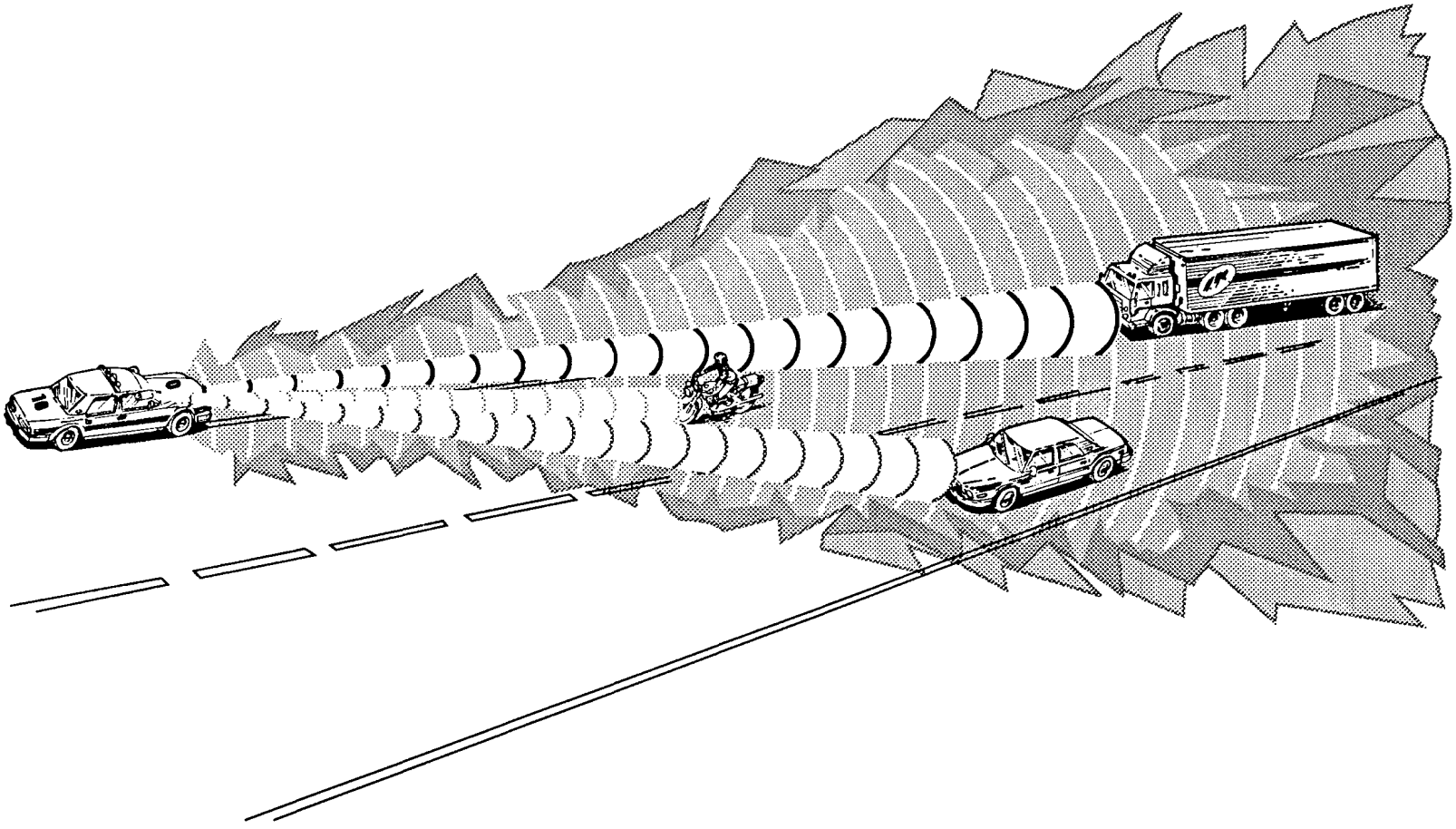

Overhead #13

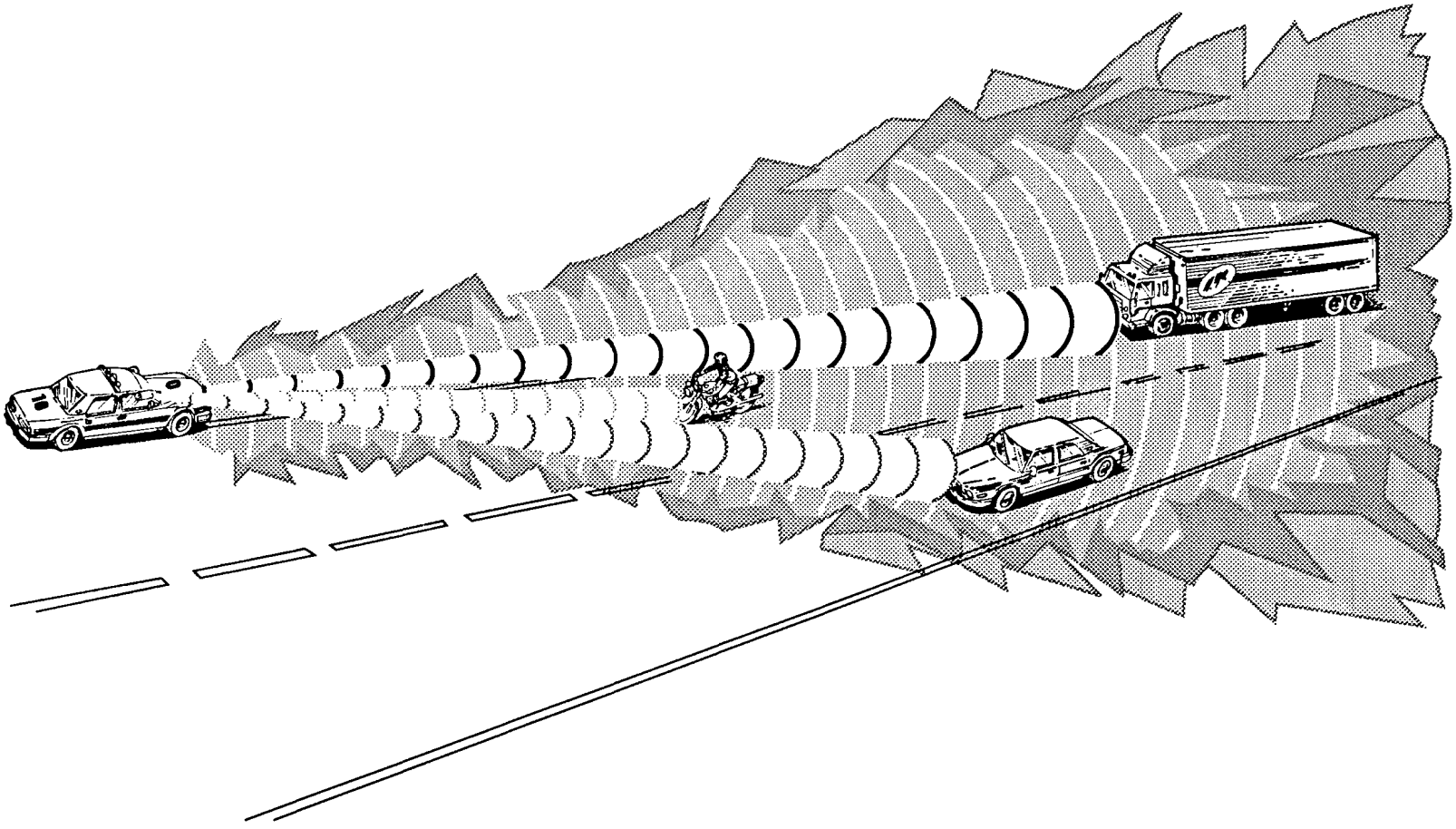

Overhead #13

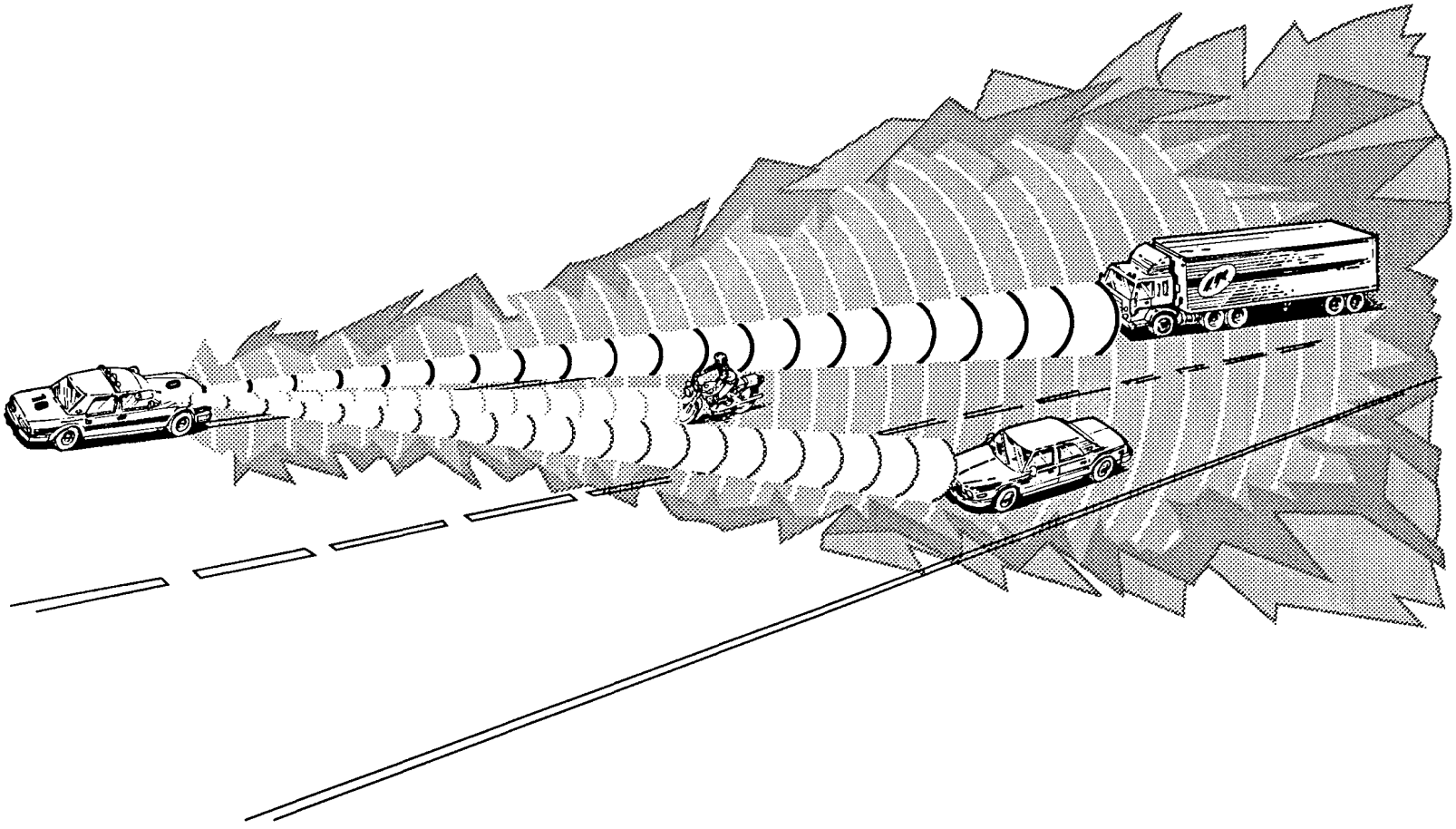

Overhead #18

Power Density Patterns

(Approximate Scale)

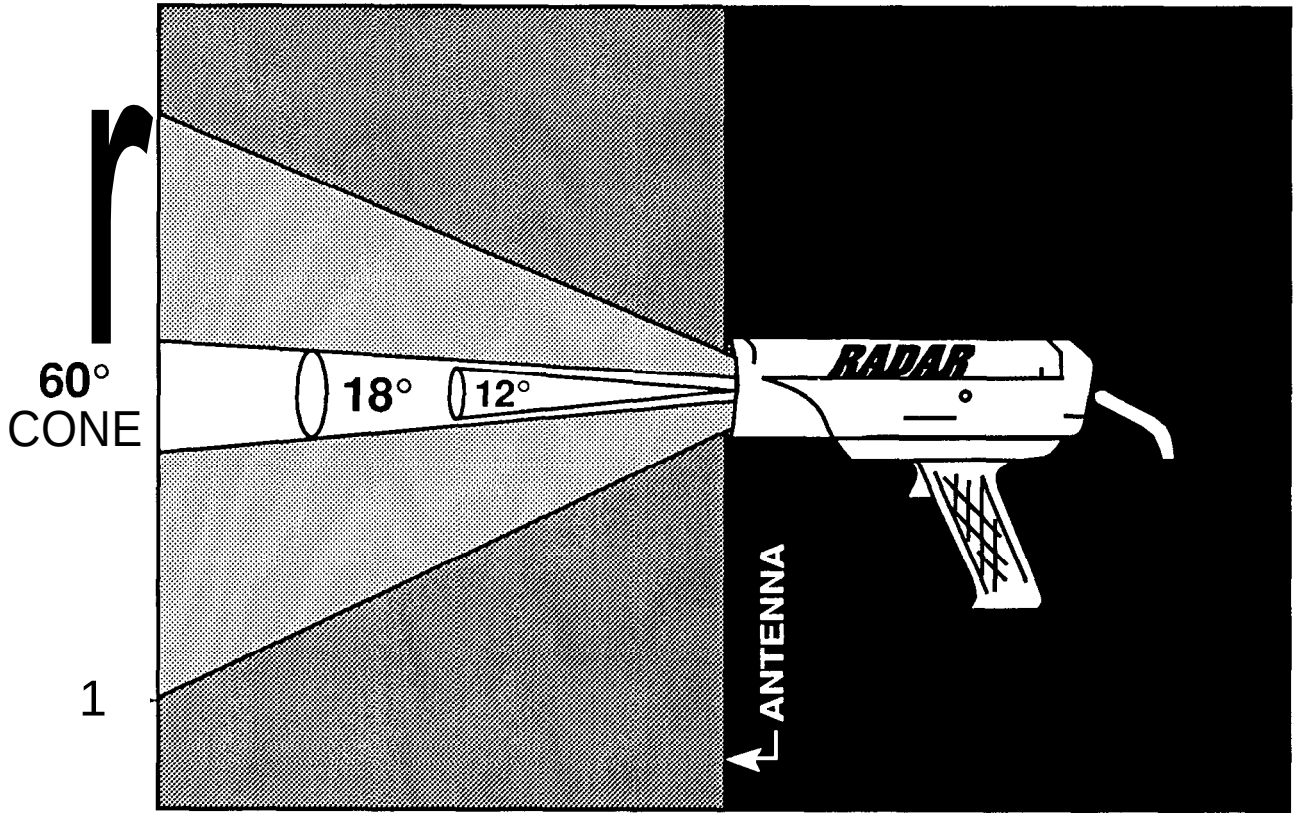

- 60° Cone = area in front of antenna which may exceed 1% of max. power
- Area outside the 60° Cone = 1% or less of max. power
- Area behind the antenna = less than 1% of max. power

12° Cone = beam of both Ka and K Band Radar

18° Cone = beam of X Band Radar

- Do I have to supply the visual aid equipment or materials?
- Where is the field training area(s)?
- Who has the final examination test booklets and answer sheets?
- What types and models of radar am I expected to teach? Who is supplying the equipment?

Trouble Shooting Guide

PROBLEM.	CHECK FOR
No Light Overhead Projector,	On/off Switch, Plugged In Fuse, Circuit Breaker, Blown Bulb, Spare Bulb
Students Not On Time From Breaks	Was Break Length Stated? Was Class Started Promptly? Need For Advisement.
No Power Radar On/off Switch	Plugged In, Ignition On, Instrument Fuse, Power Cord Fuse, Car Fuse, Dirty Contacts
Low Power Indicator Ignition On	Weak Battery, Dirty Contacts, Poor Cable Connection
Speed Display Does Not Match	Use Of Proper Forks Tuning Forks, Forks Struck Correctly, antenna Pointed Away From Traffic
Speed display does not match patrol car speedometer	Antenna Aim (cosine Effect), Large Sign Or Reflective Surface Along Path, Large Slow Moving Vehicle, Rapid Change In Patrol Vehicle Speed
Anomalous Readings (Stationary)	Antenna Location By Vent, change Of Fan Defroster Speed, Antenna Aim (cosine Effect), Antenna Pointed At Readout, Rapid Movement Of Antenna, Sources Of RFI
Range Poor	Range Control Knob, Antenna Aim, Low Power Condition, Damaged Antenna Horn

- Do I have to supply the visual aid equipment or materials?
- Where is the field training area(s)?
- Who has the final examination test booklets and answer sheets?
- What types and models of radar am I expected to teach? Who is supplying the equipment?

Trouble Shooting Guide

PROBLEM.	CHECK FOR
No Light Overhead Projector,	On/off Switch, Plugged In Fuse, Circuit Breaker, Blown Bulb, Spare Bulb
Students Not On Time From Breaks	Was Break Length Stated? Was Class Started Promptly? Need For Advisement.
No Power Radar On/off Switch	Plugged In, Ignition On, Instrument Fuse, Power Cord Fuse, Car Fuse, Dirty Contacts
Low Power Indicator Ignition On	Weak Battery, Dirty Contacts, Poor Cable Connection
Speed Display Does Not Match	Use Of Proper Forks Tuning Forks, Forks Struck Correctly, antenna Pointed Away From Traffic
Speed display does not match patrol car speedometer	Antenna Aim (cosine Effect), Large Sign Or Reflective Surface Along Path, Large Slow Moving Vehicle, Rapid Change In Patrol Vehicle Speed
Anomalous Readings (Stationary)	Antenna Location By Vent, change Of Fan Defroster Speed, Antenna Aim (cosine Effect), Antenna Pointed At Readout, Rapid Movement Of Antenna, Sources Of RFI
Range Poor	Range Control Knob, Antenna Aim, Low Power Condition, Damaged Antenna Horn

Appendix C -- IACP Consumers Product List

Appendix C -- IACP Consumers Product List

POLICE TRAFFIC RADAR SPEED MEASURING DEVICES
CONSUMER PRODUCTS LIST (CPL)
NOVEMBER 4, 1994

Units Currently in Production:

Manufacturer	Model	Radar Band	Type
Applied Concepts, Inc.	STALKER (Stationary)	Ka	v-stationary
Applied Concepts, Inc.	STALKER (Moving)	Ka	VI-Moving
Applied Concepts, Inc.	STALKER DUAL	Ka	VI-Moving
Applied Concepts, Inc.	STALKER DUAL SL	Ka	VI-moving
Decatur Electronics	Genesis I	K	IV-Moving
Kustom Signal Inc.	Eagle Series (K)	K	IV-Moving
Kustom Signal Inc.	Eagle Series (Ka)	Ka	VI-Moving
Kustom Signal Inc.	Falcon	K	III-Stationary
Kustom Signal Inc.	Hawk	K	IV-Moving
Kustom Signal Inc.	HR-12	K	IV-Moving
Kustom Signal Inc.	KR-10SP (K)	K	IV-Moving
Kustom Signal Inc.	KR-10SP (X)	X	II-Moving
Kustom Signal Inc.	Pro-1000	K	IV-Moving
Kustom Signal Inc.	Trooper	K	IV-Moving
MPH Industries Inc.	BEE-36 A (K)	K	IV-Moving
MPH Industries Inc.	BEE-36 A (X)	X	II-Moving
MPH Industries Inc.	BEE-36 (Ka)	Ka	VI-Moving
MPH Industries Inc.	K-55 (K)	K	IV-Moving
MPH Industries Inc.	K-55 (X)	X	II-Moving
Tribar Industries	Muni Quip K-GP	K	III-Hand Held
Tribar Industries	Muni Quip MDR-1	X	II-Moving
Tribar Industries	Muni Quip MDR-2	K	IV-Moving
Vindicator, Inc.	Vindicator VH-1	K	III-Hand Held

Units No Longer in Production:

Manufacturer	Model	Radar Band	Type
CMI, Inc.	Speedgun Magnum	X	II-Moving
Decatur Electronics	Hunter	X	II-Moving
Decatur Electronics	Hunter HHM	X	II-Moving
Decatur Electronics	MVR-715	X	II-Moving
Decatur Electronics	MVR-724	K	IV-Moving
Decatur Electronics	RA-GUN GN-1	X	I-Stationary
Decatur Electronics	RA-GUN KN-1	K	III-Stationary

POLICE TRAFFIC RADAR SPEED MEASURING DEVICES
CONSUMER PRODUCTS LIST (CPL)
NOVEMBER 4, 1994

Units Currently in Production:

Manufacturer	Model	Radar Band	Type
Applied Concepts, Inc.	STALKER (Stationary)	Ka	v-stationary
Applied Concepts, Inc.	STALKER (Moving)	Ka	VI-Moving
Applied Concepts, Inc.	STALKER DUAL	Ka	VI-Moving
Applied Concepts, Inc.	STALKER DUAL SL	Ka	VI-moving
Decatur Electronics	Genesis I	K	IV-Moving
Kustom Signal Inc.	Eagle Series (K)	K	IV-Moving
Kustom Signal Inc.	Eagle Series (Ka)	Ka	VI-Moving
Kustom Signal Inc.	Falcon	K	III-Stationary
Kustom Signal Inc.	Hawk	K	IV-Moving
Kustom Signal Inc.	HR-12	K	IV-Moving
Kustom Signal Inc.	KR-10SP (K)	K	IV-Moving
Kustom Signal Inc.	KR-10SP (X)	X	II-Moving
Kustom Signal Inc.	Pro-1000	K	IV-Moving
Kustom Signal Inc.	Trooper	K	IV-Moving
MPH Industries Inc.	BEE-36 A (K)	K	IV-Moving
MPH Industries Inc.	BEE-36 A (X)	X	II-Moving
MPH Industries Inc.	BEE-36 (Ka)	Ka	VI-Moving
MPH Industries Inc.	K-55 (K)	K	IV-Moving
MPH Industries Inc.	K-55 (X)	X	II-Moving
Tribar Industries	Muni Quip K-GP	K	III-Hand Held
Tribar Industries	Muni Quip MDR-1	X	II-Moving
Tribar Industries	Muni Quip MDR-2	K	IV-Moving
Vindicator, Inc.	Vindicator VH-1	K	III-Hand Held

Units No Longer in Production:

Manufacturer	Model	Radar Band	Type
CMI, Inc.	Speedgun Magnum	X	II-Moving
Decatur Electronics	Hunter	X	II-Moving
Decatur Electronics	Hunter HHM	X	II-Moving
Decatur Electronics	MVR-715	X	II-Moving
Decatur Electronics	MVR-724	K	IV-Moving
Decatur Electronics	RA-GUN GN-1	X	I-Stationary
Decatur Electronics	RA-GUN KN-1	K	III-Stationary

Appendix D -- Model Minimum Performance Specifications For Police Traffic Radar

Appendix D -- Model Minimum Performance Specifications For Police Traffic Radar

U.S. Department
of Transportation
National Highway
Traffic Safety
Administration

Model Minimum Performance Specifications for Police Traffic Radar Devices

DOT HS 808-069

NHTSA Technical Report

January 1994

This document is available to the public from the National Technical Information Service, Springfield, Virginia 22161.

U.S. Department
of Transportation
National Highway
Traffic Safety
Administration

Model Minimum Performance Specifications for Police Traffic Radar Devices

DOT HS 808-069

NHTSA Technical Report

January 1994

This document is available to the public from the National Technical Information Service, Springfield, Virginia 22161.

Technical Report Documentation Page

1. Report No.	2. Government Accession No.	3. Recipient's Catalog No.
DOT-HS-808-069		

4. Title and Subtitle	5. Report Dale
Model Minimum Performance Specifications for Police Traffic Radar Devices	January 1994
	6. Performing Organization Code
	8. Performing Organization Report No.
7. Author(s) M. Treado, J. Wakefield, G. Lieberman, J. Eliason of NIST; R. Sostkowski, IACP; B. Traynor NHTSA	
9. Performing Organization Name and Address Traffic-Safety Programs National Highway Traffic Safety Administration U.S. Department of Transportation Washington, D.C. 20590	10. Work Unit No. (TRAIS)
	11. Contract or Grant No. DTNH22-90-X-05190
12. Sponsoring Agency Name and Address National Highway Traffic Safety Administration U.S. Department of Transportation Washington, D.C. 20590	13. Type of Report and Period Covered Jan. 1993 to Oct. 1993
	14. Sponsoring Agency Code

15. Supplementary Notes

The model minimum specifications described in Chapter 3 were prepared by the Office of Law Enforcement Standards of the National Institute of Standards and Technology (formerly the NBS) under an Interagency Agreement with NHTSA.

16. Abstract

This publication provides an overview of the circumstances leading to the International Association of Chiefs of Police request that the Federal Government become involved in the development of specifications for police traffic radar and the work that has been done since 1977 in response to that request.

Chapter 1 presents a succinct description of the status of police traffic radar and its use in speed limit enforcement. It also contains a description of the Federal government's involvement with police traffic radar since 1977 and contains NHTSA's recommendations concerning the use of these devices in speed enforcement.

Chapter 2 contains a discussion of the evolution of the performance specifications from a proposed rulemaking activity to publication in the form of model minimum specifications for police radar.

Chapter 3 provides the model minimum specifications together with recommended procedures with which radar devices may be tested to assess their compliance with the guidelines proposed in the specifications.

17. Key words	18. Distribution Statement
model minimum specifications, radar speed enforcement, radar devices, police traffic radar, speed measuring devices, radar	This document is available to the public through the National Technical Information Service, Springfield, Virginia 22161

19. Security Classif. (of this report)	20. Security Classif (of this page)	21. No. of Pages	22. Price
Unclassified	Unclassified		

Form DOT F 1700.7 (8-72) Reproduction of completed page authorized

Technical Report Documentation Page

1. Report No.	2. Government Accession No.	3. Recipient's Catalog No.
DOT-HS-808-069		

4. Title and Subtitle	5. Report Dale
Model Minimum Performance Specifications for Police Traffic Radar Devices	January 1994
	6. Performing Organization Code
	8. Performing Organization Report No.
7. Author(s) M. Treado, J. Wakefield, G. Lieberman, J. Eliason of NIST; R. Sostkowski, IACP; B. Traynor NHTSA	
9. Performing Organization Name and Address Traffic-Safety Programs National Highway Traffic Safety Administration U.S. Department of Transportation Washington, D.C. 20590	10. Work Unit No. (TRAIS)
	11. Contract or Grant No. DTNH22-90-X-05190
12. Sponsoring Agency Name and Address National Highway Traffic Safety Administration U.S. Department of Transportation Washington, D.C. 20590	13. Type of Report and Period Covered Jan. 1993 to Oct. 1993
	14. Sponsoring Agency Code

15. Supplementary Notes

The model minimum specifications described in Chapter 3 were prepared by the Office of Law Enforcement Standards of the National Institute of Standards and Technology (formerly the NBS) under an Interagency Agreement with NHTSA.

16. Abstract

This publication provides an overview of the circumstances leading to the International Association of Chiefs of Police request that the Federal Government become involved in the development of specifications for police traffic radar and the work that has been done since 1977 in response to that request.

Chapter 1 presents a succinct description of the status of police traffic radar and its use in speed limit enforcement. It also contains a description of the Federal government's involvement with police traffic radar since 1977 and contains NHTSA's recommendations concerning the use of these devices in speed enforcement.

Chapter 2 contains a discussion of the evolution of the performance specifications from a proposed rulemaking activity to publication in the form of model minimum specifications for police radar.

Chapter 3 provides the model minimum specifications together with recommended procedures with which radar devices may be tested to assess their compliance with the guidelines proposed in the specifications.

17. Key words	18. Distribution Statement
model minimum specifications, radar speed enforcement, radar devices, police traffic radar, speed measuring devices, radar	This document is available to the public through the National Technical Information Service, Springfield, Virginia 22161

19. Security Classif. (of this report)	20. Security Classif (of this page)	21. No. of Pages	22. Price
Unclassified	Unclassified		

Form DOT F 1700.7 (8-72) Reproduction of completed page authorized

Technical Report Documentation Page

1. Report No.	2. Government Accession No.	3. Recipient's Catalog No.
DOT-HS-808-069		

4. Title and Subtitle	5. Report Dale
Model Minimum Performance Specifications for Police Traffic Radar Devices	January 1994
	6. Performing Organization Code
	8. Performing Organization Report No.
7. Author(s) M. Treado, J. Wakefield, G. Lieberman, J. Eliason of NIST; R. Sostkowski, IACP; B. Traynor NHTSA	
9. Performing Organization Name and Address Traffic-Safety Programs National Highway Traffic Safety Administration U.S. Department of Transportation Washington, D.C. 20590	10. Work Unit No. (TRAIS)
	11. Contract or Grant No. DTNH22-90-X-05190
12. Sponsoring Agency Name and Address National Highway Traffic Safety Administration U.S. Department of Transportation Washington, D.C. 20590	13. Type of Report and Period Covered Jan. 1993 to Oct. 1993
	14. Sponsoring Agency Code

15. Supplementary Notes

The model minimum specifications described in Chapter 3 were prepared by the Office of Law Enforcement Standards of the National Institute of Standards and Technology (formerly the NBS) under an Interagency Agreement with NHTSA.

16. Abstract

This publication provides an overview of the circumstances leading to the International Association of Chiefs of Police request that the Federal Government become involved in the development of specifications for police traffic radar and the work that has been done since 1977 in response to that request.

Chapter 1 presents a succinct description of the status of police traffic radar and its use in speed limit enforcement. It also contains a description of the Federal government's involvement with police traffic radar since 1977 and contains NHTSA's recommendations concerning the use of these devices in speed enforcement.

Chapter 2 contains a discussion of the evolution of the performance specifications from a proposed rulemaking activity to publication in the form of model minimum specifications for police radar.

Chapter 3 provides the model minimum specifications together with recommended procedures with which radar devices may be tested to assess their compliance with the guidelines proposed in the specifications.

17. Key words	18. Distribution Statement
model minimum specifications, radar speed enforcement, radar devices, police traffic radar, speed measuring devices, radar	This document is available to the public through the National Technical Information Service, Springfield, Virginia 22161

19. Security Classif. (of this report)	20. Security Classif (of this page)	21. No. of Pages	22. Price
Unclassified	Unclassified		

Form DOT F 1700.7 (8-72) Reproduction of completed page authorized

Police traffic radar has been used in this country to detect speeding motorists for about 40 years. During that time, radar speed measuring devices have evolved from the original bulky stationary models to the present compact and sophisticated units capable of monitoring the speed of vehicles moving in all directions while employed in either the stationary or moving mode. These technological advances have greatly enhanced the mobility, efficiency, and effectiveness of police traffic radar operations.

Despite the technological advances, highway safety and law enforcement administrators must ensure that radar operators receive adequate training, including recognition and avoidance of the electronic anomalies associated with such devices. Operators should be able to demonstrate their competence with the unit under varying conditions in supervised field performance tests. In addition, the radar manufacturing industry should continue to search for ways to improve the target identification capabilities of present radar devices.

The courts, as well as some radar critics, also have pointed out the need for State-level police guidance for police radar enforcement programs. After evaluation of present programs, highway safety and law enforcement officials should develop and implement comprehensive policies and procedures to ensure that police traffic radar is used properly and that traffic safety goals are achieved. State-level policy guidance would provide the added benefit of increased uniformity within a State and encourage statewide development of standard operating procedures. This would enhance voluntary compliance as the motorist travels through the many jurisdictions within each State.

NHTSA has sponsored three programs which should upgrade both the reliability and credibility of police traffic radar equipment and the quality of operator training.

Equipment:

In August 1977, NHTSA entered into an Interagency Agreement with the Law Enforcement Standards Laboratory of the National Bureau of Standards (NBS - now the National Institute of Standards and Technology, NIST) to develop performance standards for police speed measuring devices. NBS tested most of the police radar speed measuring devices used in this country and developed comprehensive performance requirements for these speed measuring devices. The draft performance standards for radar devices were completed and delivered to NHTSA in December 1980. On January 8, 1981, these specifications appeared as a proposed rulemaking in the Federal Register 46 FR 2097. Nineteen comments were received and reviewed in response to the proposed rule. The comments that were appropriate were synthesized into the model radar specifications which are presented later in this report.

NBS also determined that there were certain operational situations which may lead an inattentive or untrained operator to obtain an incorrect reading or to associate the speed indicated on the radar devices with the wrong vehicle. NBS also pointed out the potential for obtaining an erroneous reading on a target vehicle under certain conditions when the radar unit is operated in the moving mode. Judgmental errors may occur if police radar operators do not understand and avoid the specific circumstances which give rise to these anomalies.

It also became clear that police administrators must ensure that radar devices are properly maintained and periodically tested and calibrated. Written policy defining maintenance and calibration procedures should be established in each agency. The procedures should define the conditions under which each device should be calibrated at a recognized testing facility. As a minimum, we recommend that each radar unit be tested for measurement accuracy every 1 to 3 years and on each occasion that the unit undergoes repair. A written policy should specify that accurate maintenance, repair, and calibration records for each device be established and maintained by the agency. These records should be available to the courts, whenever necessary, to verify the proper maintenance and calibration of the device.

NHTSA also sponsored a parallel effort to measure the microwave field strengths surrounding 22 models in use. The purpose of these measurements was to determine whether the microwave field strengths fell within the exposure limits set by the Occupational Safety and Health Act (OSHA). This effort was also undertaken in response to an International Association of Chiefs of Police (IACP) resolution calling for government concern and involvement in this area. In sum, the assessment found that even with continuous exposure, no measurements at the aperture of the antennas of all devices tested exceeded the maximum acceptable OSHA exposure levels. In the typical case, where the operator is not directly in front of the antenna and is about 1 m (3 ft) or more away from the aperture, the field strengths either were not measurable, or were substantially less than the maximum exposure levels allowable.

The report prepared by NBS is titled, "Field Strength Measurements of Speed Measuring Radar Units." Copies of the complete report may be obtained from either the Office of Law Enforcement Standards, NIST, or the National Technical Information Service, Springfield, VA 22161, under #PB 81-240 079.

NBS also determined that there were certain operational situations which may lead an inattentive or untrained operator to obtain an incorrect reading or to associate the speed indicated on the radar devices with the wrong vehicle. NBS also pointed out the potential for obtaining an erroneous reading on a target vehicle under certain conditions when the radar unit is operated in the moving mode. Judgmental errors may occur if police radar operators do not understand and avoid the specific circumstances which give rise to these anomalies.

It also became clear that police administrators must ensure that radar devices are properly maintained and periodically tested and calibrated. Written policy defining maintenance and calibration procedures should be established in each agency. The procedures should define the conditions under which each device should be calibrated at a recognized testing facility. As a minimum, we recommend that each radar unit be tested for measurement accuracy every 1 to 3 years and on each occasion that the unit undergoes repair. A written policy should specify that accurate maintenance, repair, and calibration records for each device be established and maintained by the agency. These records should be available to the courts, whenever necessary, to verify the proper maintenance and calibration of the device.

NHTSA also sponsored a parallel effort to measure the microwave field strengths surrounding 22 models in use. The purpose of these measurements was to determine whether the microwave field strengths fell within the exposure limits set by the Occupational Safety and Health Act (OSHA). This effort was also undertaken in response to an International Association of Chiefs of Police (IACP) resolution calling for government concern and involvement in this area. In sum, the assessment found that even with continuous exposure, no measurements at the aperture of the antennas of all devices tested exceeded the maximum acceptable OSHA exposure levels. In the typical case, where the operator is not directly in front of the antenna and is about 1 m (3 ft) or more away from the aperture, the field strengths either were not measurable, or were substantially less than the maximum exposure levels allowable.

The report prepared by NBS is titled, "Field Strength Measurements of Speed Measuring Radar Units." Copies of the complete report may be obtained from either the Office of Law Enforcement Standards, NIST, or the National Technical Information Service, Springfield, VA 22161, under #PB 81-240 079.

Testing

NHTSA, with the aid of NIST, assisted the IACP in establishing five testing laboratories at universities in disparate parts of the country. These laboratories are of two different types, Consumer Products List (CPL) and Critical Performance Testing (CPT). The CPL laboratories test new type radar units and provide the IACP with the testing information necessary to produce a Consumer Products List of police radar devices that meet the requirements of these model specifications. The Consumer Products List is updated and published by the IACP on a periodic basis. The CPT laboratories test prescribed number of units which appear on the CPL both immediately following the unit's inclusion on the list and on a periodic basis throughout the unit's manufacturing life. These laboratories are also available to the law enforcement community for recertification testing by contacting the IACP.

Conclusions/Recommendations

NHTSA believes that police traffic radar is an effective enforcement tool. The role of police traffic radar in traffic enforcement continues to be of critical importance. Police traffic radar provides a means of increasing enforcement effectiveness and thus enables police administrators to cope better with speed related vehicular crashes.

Highway safety and law enforcement officials should recognize the fallacy of purchasing radar devices solely on the basis of economy without due regard to their performance capabilities. These officials must also recognize the importance of greatly improved operator training and State-level policy guidance to ensure high quality and more uniform police radar operations throughout a State. Inaction on these issues by State and local highway safety and law enforcement officials may well result in judicial limitations governing the use of police traffic radar.

It is important that each State develop a comprehensive radar speed enforcement program which, as a minimum, embraces model performance specifications for radar purchases, operator training, operator certification, and policy/procedural guidance. Accordingly, each State is strongly urged to:

- Adopt the NHTSA/NIST/IACP model minimum radar speed measuring device performance specifications and require police agencies to purchase devices meeting those specifications.

- Develop policy guidelines to ensure that radar speed measuring devices receive proper care and upkeep and establish clear procedures for programmed maintenance, testing, and calibration.

Testing

NHTSA, with the aid of NIST, assisted the IACP in establishing five testing laboratories at universities in disparate parts of the country. These laboratories are of two different types, Consumer Products List (CPL) and Critical Performance Testing (CPT). The CPL laboratories test new type radar units and provide the IACP with the testing information necessary to produce a Consumer Products List of police radar devices that meet the requirements of these model specifications. The Consumer Products List is updated and published by the IACP on a periodic basis. The CPT laboratories test prescribed number of units which appear on the CPL both immediately following the unit's inclusion on the list and on a periodic basis throughout the unit's manufacturing life. These laboratories are also available to the law enforcement community for recertification testing by contacting the IACP.

Conclusions/Recommendations

NHTSA believes that police traffic radar is an effective enforcement tool. The role of police traffic radar in traffic enforcement continues to be of critical importance. Police traffic radar provides a means of increasing enforcement effectiveness and thus enables police administrators to cope better with speed related vehicular crashes.

Highway safety and law enforcement officials should recognize the fallacy of purchasing radar devices solely on the basis of economy without due regard to their performance capabilities. These officials must also recognize the importance of greatly improved operator training and State-level policy guidance to ensure high quality and more uniform police radar operations throughout a State. Inaction on these issues by State and local highway safety and law enforcement officials may well result in judicial limitations governing the use of police traffic radar.

It is important that each State develop a comprehensive radar speed enforcement program which, as a minimum, embraces model performance specifications for radar purchases, operator training, operator certification, and policy/procedural guidance. Accordingly, each State is strongly urged to:

- Adopt the NHTSA/NIST/IACP model minimum radar speed measuring device performance specifications and require police agencies to purchase devices meeting those specifications.

- Develop policy guidelines to ensure that radar speed measuring devices receive proper care and upkeep and establish clear procedures for programmed maintenance, testing, and calibration.

Introduction

After thorough review of comments received in response to the proposed rulemaking for performance standards for radar speed measuring devices, NHTSA decided to terminate the rulemaking process. The benefits of the proposed rule can be achieved without the issuance of a Federal regulation. Therefore, NHTSA released the results of its technical research on radar to the public in the form of the (revised) model minimum performance specifications found in Chapter 3 of this report. The States and local jurisdictions are free to adopt these specifications if they choose.

Backsround

For almost 40 years, radar has been accepted by the courts and public as a reliable tool for measuring vehicular speed. Its use to enforce traffic laws has saved countless lives by deterring motorists from driving at excessive unsafe speeds. Its continued use and acceptance are vital to improve traffic safety. It is, therefore, essential that radar devices be reliable and accurate.

Until the initial publication of this document, there had been no industry-wide performance standards for police traffic radar devices. State administrators and purchasing agents had no definitive guidelines on which to base their purchasing decisions.

In 1976, after having recognized these limitations, the International Association of Chiefs of Police (IACP) passed a resolution calling for Federal Government concern and involvement in the development of health, safety, and performance standards for speed measuring devices, testing of the devices, and the publication of the results.

In 1977, as a result of the IACP resolution, NHTSA initiated efforts to develop performance standards for speed measuring radar devices to meet the needs of law enforcement. NHTSA called upon the expertise of the Law Enforcement Standards Laboratory (LESL) of the National Bureau of Standards (NBS) [now the Office of Law Enforcement Standards (OLES) of the National Institute of Standards and Technology (NIST)] to determine the most desirable and useful features of radar devices. NBS tests formed the basis for the performance standards proposed by the Agency in a notice published in the Federal Register on January 8, 1981 (46 FR 2097).

On January 8, 1981, the performance standards for radar speed measuring devices appeared as a proposed rulemaking in the Federal Register (46 FR 2097).

The most significant objections to the original proposed rule and NHTSA's responses are set forth below for historical and informational purposes:

Minimum Range: The proposed rule contained a provision which would have required each radar device operating in the stationary mode to measure and display the speed of a vehicle correctly at a distance of 500 ft. Several cornmentors stated that the test was not repeatable because the target description and environmental conditions were not sufficiently specific. Some cornmentors suggested defining the vehicle in terms of its cross section, while another indicated that the exact make, model, and year of the vehicle should be specified. NHTSA shares the commentors' concerns and has deleted this requirement from the model specifications.

Radar Horizontal Capture Angle. The proposed rule would have required manufacturers to specify the radar horizontal capture angle as measured within the -10 dB points and to scribe or otherwise mark that angle on the top surface or antenna of each radar device. After consideration of this issue, NHTSA has decided that scribing the capture angle onto the antenna would not increase target vehicle identification but could, in fact, mislead the operator in making such identifications by leading him to false conclusions about the beam coverage area. Operators must consider every approaching vehicle as a possible target whose speed could be displayed on the radar device, regardless of its position relative to the radar device. This requires the operator to consider all target vehicles, including those outside the normal parameters of the beam coverage area. The scribing requirement has accordingly been deleted.

In addition to the potential confusion to operators, the requirement of a radar capture angle label would also create several pragmatic problems. Some radar antennas are quite small and have curved surfaces which could distort the operator's perception of the size of the angle. Separately mounted antennas are frequently placed in positions which would prevent the operator from seeing the label while using the equipment, thus also causing a distorted view of the angle or total inability to use it. The Agency agrees with the many individuals and organizations who commented that target identification should be a function of operator training and thus has deleted this requirement from the model specifications.

Antenna Horizontal Beamwidth. Considerable attention has been devoted to the proposed maximum beamwidths of 18° for type I and II (X-Band) and 15° for type III and IV (K-Band) radar devices. Suggestions ranged from unlimited beamwidth for stationary devices to 5° for all devices. NBS conducted extensive tests in order to establish beamwidth values that would result in reliable radar units. The 15° maximum value for K-band (type III and IV)

The most significant objections to the original proposed rule and NHTSA's responses are set forth below for historical and informational purposes:

Minimum Range: The proposed rule contained a provision which would have required each radar device operating in the stationary mode to measure and display the speed of a vehicle correctly at a distance of 500 ft. Several cornmentors stated that the test was not repeatable because the target description and environmental conditions were not sufficiently specific. Some cornmentors suggested defining the vehicle in terms of its cross section, while another indicated that the exact make, model, and year of the vehicle should be specified. NHTSA shares the commentors' concerns and has deleted this requirement from the model specifications.

Radar Horizontal Capture Angle. The proposed rule would have required manufacturers to specify the radar horizontal capture angle as measured within the -10 dB points and to scribe or otherwise mark that angle on the top surface or antenna of each radar device. After consideration of this issue, NHTSA has decided that scribing the capture angle onto the antenna would not increase target vehicle identification but could, in fact, mislead the operator in making such identifications by leading him to false conclusions about the beam coverage area. Operators must consider every approaching vehicle as a possible target whose speed could be displayed on the radar device, regardless of its position relative to the radar device. This requires the operator to consider all target vehicles, including those outside the normal parameters of the beam coverage area. The scribing requirement has accordingly been deleted.

In addition to the potential confusion to operators, the requirement of a radar capture angle label would also create several pragmatic problems. Some radar antennas are quite small and have curved surfaces which could distort the operator's perception of the size of the angle. Separately mounted antennas are frequently placed in positions which would prevent the operator from seeing the label while using the equipment, thus also causing a distorted view of the angle or total inability to use it. The Agency agrees with the many individuals and organizations who commented that target identification should be a function of operator training and thus has deleted this requirement from the model specifications.

Antenna Horizontal Beamwidth. Considerable attention has been devoted to the proposed maximum beamwidths of 18° for type I and II (X-Band) and 15° for type III and IV (K-Band) radar devices. Suggestions ranged from unlimited beamwidth for stationary devices to 5° for all devices. NBS conducted extensive tests in order to establish beamwidth values that would result in reliable radar units. The 15° maximum value for K-band (type III and IV)

allowed the radar device to lock automatically onto any vehicle traveling faster than a preset threshold speed, thus making it harder for the operator to identify the target being tracked. The auto lock feature also allows the radar unit to lock onto a spurious signal in the absence of a bona fide target vehicle. By using a radar device without this feature, a skilled and knowledgeable operator can develop a vehicle's tracking history and thereby avoid virtually all of the alleged anomalous readings ascribed to radar operation. The elimination of this feature is consistent with the NHTSA training program which emphasizes that the tracking history is an essential part of radar operation, ensuring proper target vehicle identification.

Audio Alarm. The model specifications suggest omission of audio alarm features which emit an audio signal to alert the operator when a specific speed threshold has been exceeded by a target vehicle. Like the automatic self-lock, the inclusion of this feature can tempt the operator to be careless in his or her efforts to obtain a proper target history, relying instead on the alarm. In addition, it sometimes disrupts the audio tracking capability of the operator.

Doppler Audio. The model specifications suggest that all devices be equipped with a doppler audio feature which correlates the speed of the target vehicle with the sound emitted by the radar device. This feature also warns the operator when there is an excessive amount of electromagnetic interference, present, thereby making use of the equipment inappropriate for tracking vehicle speeds. It also helps the operator determine when traffic is too dense to identify individual targets. The Agency regards this feature as highly desirable in obtaining a proper tracking history.

Patrol Speed Window--Moving Radar. Some cornmentors objected to the inclusion of a window to display patrol speed on moving radar on the grounds that the patrol speed could be read directly from the speedometer. It is the opinion of NHTSA that all moving radar operation should be conducted with devices that have a patrol speed window which allows the operator to compare the speed displayed on the radar devices with that registered on the vehicle speedometer. This is the best way to properly identify and counter some of the erroneous readings that can be attributed to moving radar operation.

Test Equipment. Specific suggestions were received from one commentor regarding the selection of some of the equipment to be used in the conduct of laboratory procedures for testing. Of specific importance were the comments received with respect to the single-side-band modulator, the pulse generator, and the AM signal generator.

allowed the radar device to lock automatically onto any vehicle traveling faster than a preset threshold speed, thus making it harder for the operator to identify the target being tracked. The auto lock feature also allows the radar unit to lock onto a spurious signal in the absence of a bona fide target vehicle. By using a radar device without this feature, a skilled and knowledgeable operator can develop a vehicle's tracking history and thereby avoid virtually all of the alleged anomalous readings ascribed to radar operation. The elimination of this feature is consistent with the NHTSA training program which emphasizes that the tracking history is an essential part of radar operation, ensuring proper target vehicle identification.

Audio Alarm. The model specifications suggest omission of audio alarm features which emit an audio signal to alert the operator when a specific speed threshold has been exceeded by a target vehicle. Like the automatic self-lock, the inclusion of this feature can tempt the operator to be careless in his or her efforts to obtain a proper target history, relying instead on the alarm. In addition, it sometimes disrupts the audio tracking capability of the operator.

Doppler Audio. The model specifications suggest that all devices be equipped with a doppler audio feature which correlates the speed of the target vehicle with the sound emitted by the radar device. This feature also warns the operator when there is an excessive amount of electromagnetic interference, present, thereby making use of the equipment inappropriate for tracking vehicle speeds. It also helps the operator determine when traffic is too dense to identify individual targets. The Agency regards this feature as highly desirable in obtaining a proper tracking history.

Patrol Speed Window--Moving Radar. Some cornmentors objected to the inclusion of a window to display patrol speed on moving radar on the grounds that the patrol speed could be read directly from the speedometer. It is the opinion of NHTSA that all moving radar operation should be conducted with devices that have a patrol speed window which allows the operator to compare the speed displayed on the radar devices with that registered on the vehicle speedometer. This is the best way to properly identify and counter some of the erroneous readings that can be attributed to moving radar operation.

Test Equipment. Specific suggestions were received from one commentor regarding the selection of some of the equipment to be used in the conduct of laboratory procedures for testing. Of specific importance were the comments received with respect to the single-side-band modulator, the pulse generator, and the AM signal generator.

All applicable regulations must be complied with. It is the responsibility of each manufacturer to be aware of those requirements that must be met. NHTSA will assist those manufacturers who need guidance in this area, but does not consider these model specifications to be the appropriate place to cite those requirements.

On November 19, 1981, following an extensive review and comment period, NHTSA made a decision to issue a notice terminating the rulemaking action and published the revised standards in March 1982 as Model Performance Specifications for Police Traffic Radar Devices (DOT-HS-806-191). The IACP subsequently adopted these specifications, at the recommendation of the Technology Assessment Program Advisory Council, as an IACP specification document for radar devices.

During the period following the issuance of the proposed rulemaking, the manufacturers of radar devices continued to make modifications to their products directed toward complying with or exceeding the requirements of the model specifications. Publication of the model specifications prompted the IACP to submit a proposal to test radar speed measuring devices to determine compliance with the model specifications and to prepare a consumer products list in the same manner as other types of equipment being tested by the IACP. The unsolicited proposal was accepted by NHTSA and in October 1982, the IACP entered into an agreement to accomplish the testing of radar devices and publish the test results.

The radar manufacturers voluntarily submitted their products to the testing laboratories. The final testing was completed and the reports were received by the IACP on January 16, 1984. The two volume test reports were published in April 1984.

In May 1989, NHTSA published a revision to the Model Minimum Performance Specification for Police Traffic Radar Devices (DOT HS 807-415) which included multi-directional radar units.

The specifications set forth in this document represent those attributes and features of speed measuring devices considered most desirable by a wide consensus of radar users, manufacturers, and the courts. They are not intended to preclude or inhibit the development or introduction of new technology in the speed measuring device industry. As such advancements are made, the Agency will incorporate them into the existing model specifications. A number of minor changes and clarifications have been incorporated into this edition of the model minimum specifications as a result of suggestions made by users and manufacturers and as dictated by changing technology.

To complement these specifications, NHTSA has also developed and widely distributed a model operator's training course for users

of police traffic radar. When adopted by State and local jurisdictions, this model training course should upgrade the quality of radar training that most police officers receive. The training program, coupled with the performance specifications, should ensure the continued reliability and accuracy of radar devices.

The responsibility for oversight of the IACP testing program was and continues to be assigned to its Highway Safety Advisory Committee. This standing committee appointed a technical advisory committee on radar which is, in part, comprised of the radar manufacturers, a member from OLES and a member from NHTSA. These revised Model Minimum Specifications for Police Traffic Radar Devices are a product of these committees, and incorporate changes to the specifications required by constantly improving technology.

The Agency still intends to be responsive to the 1976 resolution regarding police traffic radar issued by the IACP. Therefore, we have authorized the IACP to adopt these model specifications for radar devices. We expect them to provide their constituents with the best available guidance on police traffic radar devices. The results of this work should fortify their efforts to assist the police in retaining these devices as effective law enforcement tools, while allowing NHTSA to meet its obligations to provide technical assistance to the traffic law enforcement community. The IACP's efforts will involve both (1) oversight of the research/testing program, in collaboration with NIST and NHTSA, and (2) publication/dissemination of the results of the testing of all interested parties.

NHTSA still believes a research/testing program is an integral part of the assessment of radar devices. The purpose of this testing program is to provide the IACP and law enforcement with definitive test data on how the radar devices on the market perform when compared to the model specifications.

of police traffic radar. When adopted by State and local jurisdictions, this model training course should upgrade the quality of radar training that most police officers receive. The training program, coupled with the performance specifications, should ensure the continued reliability and accuracy of radar devices.

The responsibility for oversight of the IACP testing program was and continues to be assigned to its Highway Safety Advisory Committee. This standing committee appointed a technical advisory committee on radar which is, in part, comprised of the radar manufacturers, a member from OLES and a member from NHTSA. These revised Model Minimum Specifications for Police Traffic Radar Devices are a product of these committees, and incorporate changes to the specifications required by constantly improving technology.

The Agency still intends to be responsive to the 1976 resolution regarding police traffic radar issued by the IACP. Therefore, we have authorized the IACP to adopt these model specifications for radar devices. We expect them to provide their constituents with the best available guidance on police traffic radar devices. The results of this work should fortify their efforts to assist the police in retaining these devices as effective law enforcement tools, while allowing NHTSA to meet its obligations to provide technical assistance to the traffic law enforcement community. The IACP's efforts will involve both (1) oversight of the research/testing program, in collaboration with NIST and NHTSA, and (2) publication/dissemination of the results of the testing of all interested parties.

NHTSA still believes a research/testing program is an integral part of the assessment of radar devices. The purpose of this testing program is to provide the IACP and law enforcement with definitive test data on how the radar devices on the market perform when compared to the model specifications.

CHAPTER 3

MODEL MINIMUM PERFORMANCE SPECIFICATIONS FOR POLICE TRAFFIC RADAR DEVICES

CHAPTER 3

MODEL MINIMUM PERFORMANCE SPECIFICATIONS FOR POLICE TRAFFIC RADAR DEVICES

MODEL MINIMUM PERFORMANCE SPECIFICATIONS FOR SPEED MEASURING RADAR DEVICES

Subpart A - General

Section

1221.1 Scope
1221.2 Purpose
1221.3 Application
1221.4 Definitions

Subpart B - Requirements

1221.11 Manufacturer Provided Equipment
1221.12 Manufacturer Provided Information
1221.13 Labeling Requirements
1221.14 Tuning Fork Calibration Requirement
1221.15 Radar Device Tuning Fork Requirement
1221.16 Microwave Transmission Requirements
1221.17 Environmental Requirements
1221.18 Low Supply Voltage Requirement
1221.19 Doppler Audio Requirements
1221.20 Power Surge Requirements
1221.21 Speed Display Requirements
1221.22 Electromagnetic Interference Susceptibility Requirements
1221.23 Radar Device Operational Test Requirements
1221.24 Speed Accuracy

Subpart C - Test Procedures

Conditions

1221.31 Conditions

Equipment

1221.41 Equipment
1221.42 Audiofrequency Synthesizer
1221.43 Microphone
1221.44 Environmental Chamber
1221.45 Anechoic Chamber
1221.46 Microwave Frequency Counter
1221.47 Field Strength Meter
1221.48 Isotropic Probe
1221.49 Photometer
1221.50 Simulator Test Range
1221.51 Line Impedance Stabilization Network (LISN)
1221.52 Isolation Transformer
1221.53 Pulse Generator
1221.54 Sawtooth Wave Generator
1221.55 FM Signal Generator

Section

Equipment (con't)

MODEL MINIMUM PERFORMANCE SPECIFICATIONS FOR SPEED MEASURING RADAR DEVICES

Subpart A - General

Section

1221.1 Scope
1221.2 Purpose
1221.3 Application
1221.4 Definitions

Subpart B - Requirements

1221.11 Manufacturer Provided Equipment
1221.12 Manufacturer Provided Information
1221.13 Labeling Requirements
1221.14 Tuning Fork Calibration Requirement
1221.15 Radar Device Tuning Fork Requirement
1221.16 Microwave Transmission Requirements
1221.17 Environmental Requirements
1221.18 Low Supply Voltage Requirement
1221.19 Doppler Audio Requirements
1221.20 Power Surge Requirements
1221.21 Speed Display Requirements
1221.22 Electromagnetic Interference Susceptibility Requirements
1221.23 Radar Device Operational Test Requirements
1221.24 Speed Accuracy

Subpart C - Test Procedures

Conditions

1221.31 Conditions

Equipment

1221.41 Equipment
1221.42 Audiofrequency Synthesizer
1221.43 Microphone
1221.44 Environmental Chamber
1221.45 Anechoic Chamber
1221.46 Microwave Frequency Counter
1221.47 Field Strength Meter
1221.48 Isotropic Probe
1221.49 Photometer
1221.50 Simulator Test Range
1221.51 Line Impedance Stabilization Network (LISN)
1221.52 Isolation Transformer
1221.53 Pulse Generator
1221.54 Sawtooth Wave Generator
1221.55 FM Signal Generator

Section

Equipment (con't)

§1221.4 Definitions

As used in this part:

"Accuracy" when used in conjunction with radar devices means the degree to which the radar device measures and displays the correct speed of a target vehicle that it is tracking.

"Ambient interference" means the conducted and/or radiated electromagnetic interference and/or mechanical motion interference, at a specific test location and time, which is detrimental to proper radar performance.

"Antenna horizontal **beamwidth"** means the total included acute angle, in the horizontal plane, of the main lobe between the half-power points of the radar antenna far-field radiation pattern, where the half-power points are measured relative to the maximum power at the center of the beam and on a radius equidistant from the face of the antenna.

"Automatic lock" means a control function of a radar device that, when activated, causes the device to retain automatically the displayed speed of a target vehicle when the target vehicle speed exceeds some preset value, and preserve that displayed speed until manually reset by the operator.

"Closing speed" means the speed at which an identified radar target is moving relative to the radar device (whether the radar device is moving or not) when measured on a straight line (radius) from the radar to the target.

"Cosine effect" means the effect due to the target not traveling directly toward **the** radar device. This effect lowers the Doppler shift frequency in proportion to the cosine of the angle between the direction of travel of the radar target and a line from the radar device to the target.

"Display" means a visual readout device.

"Doppler audio" means an audible signal from a radar device that is generated by driving a loudspeaker with the Doppler shift beat frequency or with the Doppler shift beat frequency divided by a fixed factor, provided the audio sound corresponds directly to changes in speed of target vehicle, and any ambient interference present is discernible.

"Doppler shift**"** means the magnitude of the frequency change of the radar return signal received when the source and the radar reflecting target are in motion relative to one another.

"Erroneous reading" means an incorrect target speed displayed by the radar device, one that is not due to a target vehicle or which is not within the required accuracy tolerance of the speed of a target vehicle, excluding known correction factors such as the cosine effect.

"Far-field region" means that region beyond the close proximity of a transmitting antenna defined by the relationship

$$R > \frac{2d^2}{\lambda}$$

where d is the horn diameter and λ is the wavelength of the transmitted frequency, in consistent units.

"Internal circuit test" means a test function (whether manually or automatically initiated) that verifies that all radar device internal signal-processing circuitry, except for the microwave transmitter and receiver, is working correctly, i.e., all target and patrol vehicle signals will be properly processed and displayed.

"Just acquired distant target" means a target just within the radar range of a radar device which was originally beyond the range and now provides a display signal of target speed.

"K-Band radar" means a speed measuring radar device designed to operate in the 24 050 to 24 250 MHz frequency band.

"Ka-Band radar" means a speed measuring radar device designed to operate in the 33 400 to 36 000 MHz frequency band.

"Low voltage indicator" means a radar device component which alerts the operator to the fact that a low supply voltage condition exists.

"Luminance" means the photometric brightness or the luminous intensity of any surface in a given direction per unit of projected area of the surface as viewed from that direction.

"Luminance contrast" means the relationship between the luminance of an object and the luminance of its own background.

"Microwave output power" means that part of the total power produced by the microwave generator in the radar devices.

"Moving mode" means the capability of a radar device to measure and display the speed of a target vehicle while the radar device is moving with respect to the surrounding terrain.

"Near-field region" means that region in close proximity to the transmitting antenna that is not included in the region defined as "far-field region."

"Nominal value" means the numerical value of a device characteristic as specified by the manufacturer.

"Opposite direction moving mode" means that a radar device has the ability to measure and display the speed of a target vehicle while the radar device and the target vehicle are moving in opposite directions.

"Far-field region" means that region beyond the close proximity of a transmitting antenna defined by the relationship

$$R > \frac{2d^2}{\lambda}$$

where d is the horn diameter and λ is the wavelength of the transmitted frequency, in consistent units.

"Internal circuit test" means a test function (whether manually or automatically initiated) that verifies that all radar device internal signal-processing circuitry, except for the microwave transmitter and receiver, is working correctly, i.e., all target and patrol vehicle signals will be properly processed and displayed.

"Just acquired distant target" means a target just within the radar range of a radar device which was originally beyond the range and now provides a display signal of target speed.

"K-Band radar" means a speed measuring radar device designed to operate in the 24 050 to 24 250 MHz frequency band.

"Ka-Band radar" means a speed measuring radar device designed to operate in the 33 400 to 36 000 MHz frequency band.

"Low voltage indicator" means a radar device component which alerts the operator to the fact that a low supply voltage condition exists.

"Luminance" means the photometric brightness or the luminous intensity of any surface in a given direction per unit of projected area of the surface as viewed from that direction.

"Luminance contrast" means the relationship between the luminance of an object and the luminance of its own background.

"Microwave output power" means that part of the total power produced by the microwave generator in the radar devices.

"Moving mode" means the capability of a radar device to measure and display the speed of a target vehicle while the radar device is moving with respect to the surrounding terrain.

"Near-field region" means that region in close proximity to the transmitting antenna that is not included in the region defined as "far-field region."

"Nominal value" means the numerical value of a device characteristic as specified by the manufacturer.

"Opposite direction moving mode" means that a radar device has the ability to measure and display the speed of a target vehicle while the radar device and the target vehicle are moving in opposite directions.

"Target vehicle" means the vehicle identified as producing a given Doppler radar signal that is processed and displayed by the radar device as the target speed.

"Track-through-lock" means the feature of a radar device whereby the unit continues to measure, process and accomplish Doppler audio tracking and, in some cases, display in real time the target speed after the speed lock switch has been actuated to the lock condition.

"Tuning fork" means a mechanical self-resonant device, which when excited, produces free oscillations that may be used to generate a pseudo Doppler frequency reference when placed in the radar antenna beam.

"Type I radar device" means a radar device that transmits microwave energy in the **10 500** to **10 550 MHz** frequency band (in the X-band) and operates only in the stationary mode.

"Type II radar **device"** means a radar device that transmits microwave energy in the **10 500** to **10 550 MHz** frequency band (in the X-band) and operates in both the stationary and moving modes.

"Type III radar device" means a radar device that transmits microwave energy in the **24 050** to **24 250 MHz** frequency band (in the **K** band) and operates only in the stationary mode.

"Type IV radar **device"** means a radar device that transmits microwave energy in the **24 050** to **24 250 MHz** frequency band (in the K-band) and operates in both the stationary and moving modes.

"Type V radar device" means a radar device that transmits microwave energy in the **33 400** to **36 000 MHz** frequency band (in the **Ka-band)** and operates only in the stationary mode.

Type VI radar **device"** means a radar device that transmits microwave energy in the **33 400** to **36 000 MHz** frequency band (in the **Ka-band)** and operates in both the stationary and moving modes.

"X-band radar" means a speed measuring radar device designed to operate in the frequency band of **10 500** to **10 550 MHz.**

Subpart B - Requirements

§1221.11 Manufacturer Provided Equipment

Each type I, III, and V radar device shall be accompanied by a minimum of one tuning fork and each type II, IV, and VI radar device shall be accompanied by a minimum of two tuning forks.

"Target vehicle" means the vehicle identified as producing a given Doppler radar signal that is processed and displayed by the radar device as the target speed.

"Track-through-lock" means the feature of a radar device whereby the unit continues to measure, process and accomplish Doppler audio tracking and, in some cases, display in real time the target speed after the speed lock switch has been actuated to the lock condition.

"Tuning fork" means a mechanical self-resonant device, which when excited, produces free oscillations that may be used to generate a pseudo Doppler frequency reference when placed in the radar antenna beam.

"Type I radar device" means a radar device that transmits microwave energy in the **10 500** to **10 550 MHz** frequency band (in the X-band) and operates only in the stationary mode.

"Type II radar **device"** means a radar device that transmits microwave energy in the **10 500** to **10 550 MHz** frequency band (in the X-band) and operates in both the stationary and moving modes.

"Type III radar device" means a radar device that transmits microwave energy in the **24 050** to **24 250 MHz** frequency band (in the **K** band) and operates only in the stationary mode.

"Type IV radar **device"** means a radar device that transmits microwave energy in the **24 050** to **24 250 MHz** frequency band (in the K-band) and operates in both the stationary and moving modes.

"Type V radar device" means a radar device that transmits microwave energy in the **33 400** to **36 000 MHz** frequency band (in the **Ka-band)** and operates only in the stationary mode.

Type VI radar **device"** means a radar device that transmits microwave energy in the **33 400** to **36 000 MHz** frequency band (in the **Ka-band)** and operates in both the stationary and moving modes.

"X-band radar" means a speed measuring radar device designed to operate in the frequency band of **10 500** to **10 550 MHz.**

Subpart B - Requirements

§1221.11 Manufacturer Provided Equipment

Each type I, III, and V radar device shall be accompanied by a minimum of one tuning fork and each type II, IV, and VI radar device shall be accompanied by a minimum of two tuning forks.

tuning fork, the nominal design speed, a frequency calibration at **21°C (70°F),** the microwave frequency band for which it is to be used **(X, K,** or **Ka),** the calibrated frequency and associated radar speed in mph or km/h, and any correction factor that must be applied to the **21°C (70°F)** calibration speed when used at another temperature.

§1221.13 Labeling Requirements

(a) Tuning Fork. The manufacturer shall permanently mark each tuning fork with a serial number, the radar frequency band that is to be used with **(X, K,** or **Ka),** and a nominal stationary model radar speed specification including units (km/h or mph). Each **Ka** band tuning fork shall also be permanently marked with the nominal microwave frequency of its radar device, or marked with a code representing the same.

(b) Control Functions. The control panel of the radar device shall be permanently marked with the functions and settings of all switches, controls, and displays. It shall not be possible to set the controls to a functional mode of operation that is not marked or identified on the control panel of the radar device.

§1221.14 Tuning Fork Calibration Requirement

When tested in accordance with **§1221.71,** the frequency of vibration of each tuning fork shall be within **±1/2** percent of that specified by the manufacturer **(§1221.12(b))** in the certificate of calibration for that tuning fork.

§1221.15 Radar Device Tuning Fork Requirement

Each radar device when tested in accordance with **§1221.72** shall meet the following tuning fork requirements, as appropriate.

(a) All Radar Devices. Each radar device, when placed in the stationary mode, shall respond to the signal from the tuning fork within **±2** km/h **(±1** mph) of the speed corresponding to the tuning fork frequency.

(b) Type II, Type IV, and Type VI Radar Devices (Opposite Direction **Moving** Mode). Each type II, IV, and VI radar device, when placed into the opposite direction, moving mode, shall simultaneously respond to the signals from two vibrating tuning forks of different frequencies, and shall display the calibration speed designated for the lower frequency tuning fork as the patrol vehicle speed, and the difference between the calibration speed designated for the higher frequency tuning fork and that of the lower frequency tuning fork as the target vehicle speed; both displayed speeds shall be within **±2** km/h **(±1** mph) of the correct values.

tuning fork, the nominal design speed, a frequency calibration at **21°C (70°F),** the microwave frequency band for which it is to be used **(X, K,** or **Ka),** the calibrated frequency and associated radar speed in mph or km/h, and any correction factor that must be applied to the **21°C (70°F)** calibration speed when used at another temperature.

§1221.13 Labeling Requirements

(a) Tuning Fork. The manufacturer shall permanently mark each tuning fork with a serial number, the radar frequency band that is to be used with **(X, K,** or **Ka),** and a nominal stationary model radar speed specification including units (km/h or mph). Each **Ka** band tuning fork shall also be permanently marked with the nominal microwave frequency of its radar device, or marked with a code representing the same.

(b) Control Functions. The control panel of the radar device shall be permanently marked with the functions and settings of all switches, controls, and displays. It shall not be possible to set the controls to a functional mode of operation that is not marked or identified on the control panel of the radar device.

§1221.14 Tuning Fork Calibration Requirement

When tested in accordance with **§1221.71,** the frequency of vibration of each tuning fork shall be within **±1/2** percent of that specified by the manufacturer **(§1221.12(b))** in the certificate of calibration for that tuning fork.

§1221.15 Radar Device Tuning Fork Requirement

Each radar device when tested in accordance with **§1221.72** shall meet the following tuning fork requirements, as appropriate.

(a) All Radar Devices. Each radar device, when placed in the stationary mode, shall respond to the signal from the tuning fork within **±2** km/h **(±1** mph) of the speed corresponding to the tuning fork frequency.

(b) Type II, Type IV, and Type VI Radar Devices (Opposite Direction **Moving** Mode). Each type II, IV, and VI radar device, when placed into the opposite direction, moving mode, shall simultaneously respond to the signals from two vibrating tuning forks of different frequencies, and shall display the calibration speed designated for the lower frequency tuning fork as the patrol vehicle speed, and the difference between the calibration speed designated for the higher frequency tuning fork and that of the lower frequency tuning fork as the target vehicle speed; both displayed speeds shall be within **±2** km/h **(±1** mph) of the correct values.

shall not exceed 18° for type I and II and 15° for type III, IV, V, and VI radar devices.

(e) Antenna Near-Field Power Density. The maximum antenna near-field power density of each radar device shall not exceed 5 mW/cm² (§1221.12(a)(7)). A radar device powered by a NiCd power pack, and designed to use a nominal 12 V automotive battery and adapter as an optional source of power, shall also be tested for near-field power density utilizing this adapter.

In addition, the manufacturer of each hand-held radar device shall make available to purchasers the following optional feature:

(f) Standby/Operate Switch. A positive action control ("standby/operate switch") which, when used in a stationary mode, must be held depressed for the radar to transmit rf electromagnetic energy. When this control is released the hand-held radar device shall cease to transmit electromagnetic energy, i.e., return to the rf standby mode. When a unit is equipped with this option, no mechanism shall exist, as a part of the radar device, to lock this control switch in the transmit position. The operation of the standby switch shall be verified in accordance with §1221.73(f).

§1221.17 Environmental Requirements

The ability of the radar device to operate in environmental extremes shall be determined using the appropriate test methods described in §1221.74 and each radar device shall meet the following requirements:

(a) Operational Temperature Stability. When tested in accordance with §1221.74(a), following exposure to a temperature of -30°C (-22°F) or the lowest temperature at which the manufacturer states that the radar devices will operate properly (§1221.12(a)(11)), whichever is lower, and following exposure to a temperature of 60°C (140°F) or the highest temperature at which the manufacturer states that the device will operate properly (§1221.12(a)(11)), whichever is higher, each radar device shall continue to meet the requirements of §1221.15 and §1221.16 through §1221.16(c).

(b) Operational Humidity Stability. When tested in accordance with §1221.74(b) following exposure to 90 percent relative humidity at 37°C (99°F) for a minimum of 8 h, each radar device shall continue to meet the requirements of §1221.15 and §1221.16(a) through §1221.16(c).

(c) Vibration Stability. No fixed part of the radar device shall come loose, nor movable part be shifted in position or adjustment, as a result of the test conducted in accordance with

shall not exceed 18° for type I and II and 15° for type III, IV, V, and VI radar devices.

(e) Antenna Near-Field Power Density. The maximum antenna near-field power density of each radar device shall not exceed 5 mW/cm² (§1221.12(a)(7)). A radar device powered by a NiCd power pack, and designed to use a nominal 12 V automotive battery and adapter as an optional source of power, shall also be tested for near-field power density utilizing this adapter.

In addition, the manufacturer of each hand-held radar device shall make available to purchasers the following optional feature:

(f) Standby/Operate Switch. A positive action control ("standby/operate switch") which, when used in a stationary mode, must be held depressed for the radar to transmit rf electromagnetic energy. When this control is released the hand-held radar device shall cease to transmit electromagnetic energy, i.e., return to the rf standby mode. When a unit is equipped with this option, no mechanism shall exist, as a part of the radar device, to lock this control switch in the transmit position. The operation of the standby switch shall be verified in accordance with §1221.73(f).

§1221.17 Environmental Requirements

The ability of the radar device to operate in environmental extremes shall be determined using the appropriate test methods described in §1221.74 and each radar device shall meet the following requirements:

(a) Operational Temperature Stability. When tested in accordance with §1221.74(a), following exposure to a temperature of -30°C (-22°F) or the lowest temperature at which the manufacturer states that the radar devices will operate properly (§1221.12(a)(11)), whichever is lower, and following exposure to a temperature of 60°C (140°F) or the highest temperature at which the manufacturer states that the device will operate properly (§1221.12(a)(11)), whichever is higher, each radar device shall continue to meet the requirements of §1221.15 and §1221.16 through §1221.16(c).

(b) Operational Humidity Stability. When tested in accordance with §1221.74(b) following exposure to 90 percent relative humidity at 37°C (99°F) for a minimum of 8 h, each radar device shall continue to meet the requirements of §1221.15 and §1221.16(a) through §1221.16(c).

(c) Vibration Stability. No fixed part of the radar device shall come loose, nor movable part be shifted in position or adjustment, as a result of the test conducted in accordance with

The power surge characteristics exhibited when switching the radar device from standby to on shall be tested in accordance with **§1221.78.** Switching the radar device from standby to on shall not cause any erroneous speed readings with a target present.

§1221.21 Speed Display Requirements

The speed display characteristics of display readability, display speed lock **control,** display clear function, internal circuit test function, speed display transfer, signal processing channel sensitivity, target channel speed displays, patrol channel speed displays, and auxiliary displays shall be tested in accordance with **§1221.79** and shall meet the following requirements:

(a) Display Readability. The illuminated segments used to indicate speed readings shall have a minimum daylight luminance contrast of **2.5** when compared with the display background.

(b) Display Speed Lock Control. If provided, the speed lock switch shall preserve the displayed target vehicle and patrol vehicle (types II, IV, and VI) speed readings. The speed lock switch shall require manual actuation by the radar operator and shall not be capable of automatic self-lock. When the radar device has a track-through-lock capability, the speed reading(s) displayed after locking shall be the target speed and patrol speed (types II, IV, and VI only) that existed at the instant the speed lock switch was activated. The radar device shall not recall a previous speed reading when the speed lock switch is activated. The radar device shall not be capable of blanking the patrol speed display except after it is locked.

(c) Display Clear Function. The selection of a different mode of operation of the radar device such as switching from off to on, lock to clear, between stationary and moving mode, opposite and same direction mode, or faster and slower target mode, shall automatically clear the radar device of all displayed readings whether the speed lock switch is activated or not, unless the radar device retains displayed information indicating the mode used to acquire the locked-in target speed. It shall be permissible to accomplish a test sequence without clearing locked-in speed readings.

(d) Internal Circuit Test Function. The radar device shall have a self-test function that, when activated, determines whether or not internal signals will be processed and displayed to within **±2** km/h **(±1** mph). The radar device shall display the correct reading(s) when performing the internal circuit test function and it shall be impossible for the radar device to lock in the speed displays caused by this test. These readings shall be cleared when the radar is switched to another mode of

The power surge characteristics exhibited when switching the radar device from standby to on shall be tested in accordance with **§1221.78.** Switching the radar device from standby to on shall not cause any erroneous speed readings with a target present.

§1221.21 Speed Display Requirements

The speed display characteristics of display readability, display speed lock **control,** display clear function, internal circuit test function, speed display transfer, signal processing channel sensitivity, target channel speed displays, patrol channel speed displays, and auxiliary displays shall be tested in accordance with **§1221.79** and shall meet the following requirements:

(a) Display Readability. The illuminated segments used to indicate speed readings shall have a minimum daylight luminance contrast of **2.5** when compared with the display background.

(b) Display Speed Lock Control. If provided, the speed lock switch shall preserve the displayed target vehicle and patrol vehicle (types II, IV, and VI) speed readings. The speed lock switch shall require manual actuation by the radar operator and shall not be capable of automatic self-lock. When the radar device has a track-through-lock capability, the speed reading(s) displayed after locking shall be the target speed and patrol speed (types II, IV, and VI only) that existed at the instant the speed lock switch was activated. The radar device shall not recall a previous speed reading when the speed lock switch is activated. The radar device shall not be capable of blanking the patrol speed display except after it is locked.

(c) Display Clear Function. The selection of a different mode of operation of the radar device such as switching from off to on, lock to clear, between stationary and moving mode, opposite and same direction mode, or faster and slower target mode, shall automatically clear the radar device of all displayed readings whether the speed lock switch is activated or not, unless the radar device retains displayed information indicating the mode used to acquire the locked-in target speed. It shall be permissible to accomplish a test sequence without clearing locked-in speed readings.

(d) Internal Circuit Test Function. The radar device shall have a self-test function that, when activated, determines whether or not internal signals will be processed and displayed to within **±2** km/h **(±1** mph). The radar device shall display the correct reading(s) when performing the internal circuit test function and it shall be impossible for the radar device to lock in the speed displays caused by this test. These readings shall be cleared when the radar is switched to another mode of

(1) Low and High Speed Readings:

(i) The patrol signal processor channel and patrol speed display shall function as specified in the test procedure at §1221.79(h)(1), at speeds down to 32 km/h (20 mph) or the lowest speed at which the manufacturer states that the unit will operate properly (§1221.12(a)(10)), whichever is lower, when operating in the moving mode.

(ii) The patrol signal processor channel and the patrol speed display shall function as specified in the test procedure at §1221.79(h)(1) at a speed of 112 km/h (70 mph) or the highest speed at which the manufacturer states that his unit will operate properly (§1221.12(a)(10)), whichever is higher, when operating in the moving mode.

(2) Patrol Vehicle Speed Changes. When tested in accordance with §1221.79(h)(2) the patrol signal processor channel shall track the patrol car speed within ±2 km/h (±1 mph) and maintain proper radar performance while the patrol car changes speed at a rate of 4.8 km/h (3 mph) per second.

(i) Auxiliary Displays. If the radar device has auxiliary speed displays, the requirements specified for the target channel and patrol channel displays shall apply to the auxiliary displays.

(1) If the radar device utilizes a printing device to record permanently the speed display readings, this printed record shall show the operating status (stationary or moving mode), the retained patrol vehicle and target vehicle speeds and the time of day and date at which the speed lock switch is activated.

(2) If the radar device utilizes a separable, remote module, this remote module shall display, as a minimum, the retained target vehicle speed. The remote module shall clear all displays when reconnected to the radar device or when a display clear function occurs.

(j) Same Direction Moving Mode Speed Computation Indicator (Types II, IV, and VI Only). For those radar devices having a same direction moving mode capability, the readout unit shall have a visual indicator designating whether target speed is being computed on the basis of a target vehicle traveling faster or slower than the patrol vehicle.

§1221.22 Electromagnetic Interference Susceptibility Requirements

The susceptibility of the radar device to simulated electromagnetic interference from the vehicle alternator, vehicle

(1) Low and High Speed Readings:

(i) The patrol signal processor channel and patrol speed display shall function as specified in the test procedure at §1221.79(h)(1), at speeds down to 32 km/h (20 mph) or the lowest speed at which the manufacturer states that the unit will operate properly (§1221.12(a)(10)), whichever is lower, when operating in the moving mode.

(ii) The patrol signal processor channel and the patrol speed display shall function as specified in the test procedure at §1221.79(h)(1) at a speed of 112 km/h (70 mph) or the highest speed at which the manufacturer states that his unit will operate properly (§1221.12(a)(10)), whichever is higher, when operating in the moving mode.

(2) Patrol Vehicle Speed Changes. When tested in accordance with §1221.79(h)(2) the patrol signal processor channel shall track the patrol car speed within ±2 km/h (±1 mph) and maintain proper radar performance while the patrol car changes speed at a rate of 4.8 km/h (3 mph) per second.

(i) Auxiliary Displays. If the radar device has auxiliary speed displays, the requirements specified for the target channel and patrol channel displays shall apply to the auxiliary displays.

(1) If the radar device utilizes a printing device to record permanently the speed display readings, this printed record shall show the operating status (stationary or moving mode), the retained patrol vehicle and target vehicle speeds and the time of day and date at which the speed lock switch is activated.

(2) If the radar device utilizes a separable, remote module, this remote module shall display, as a minimum, the retained target vehicle speed. The remote module shall clear all displays when reconnected to the radar device or when a display clear function occurs.

(j) Same Direction Moving Mode Speed Computation Indicator (Types II, IV, and VI Only). For those radar devices having a same direction moving mode capability, the readout unit shall have a visual indicator designating whether target speed is being computed on the basis of a target vehicle traveling faster or slower than the patrol vehicle.

§1221.22 Electromagnetic Interference Susceptibility Requirements

The susceptibility of the radar device to simulated electromagnetic interference from the vehicle alternator, vehicle

radio transceiver, properly installed in the radar-equipped patrol vehicle, is operated while the patrol vehicle is standing still with the radar device in the stationary mode and tracking a just-acquired distant target traveling at a speed of 80 km/h (50 mph). The radar device shall not display any erroneous readings when a handheld police FM transceiver with an integral antenna is operated inside the patrol vehicle under similar circumstances.

(b) Citizens Band (CB) AM Transceiver Interference. The radar device shall not display any erroneous speed readings when a CB AM transceiver properly installed in the radar equipped patrol vehicle is operated while the patrol vehicle is standing still with the radardevice in the stationary mode and tracking a just-acquired distant target traveling at a speed of 80 km/h (50 mph).

(c) Adjacent Vehicle Radiofrequency Interference.

(1) The radar device shall not display any erroneous speed readings when a second vehicle with an operating police FM transceiver is driven within 3 m (10 ft) of the stationary patrol vehicle while the radar device is operating and tracking a just-acquired distant target traveling at a speed of 80 km/h (50 mph).

(2) The radar device shall not display any erroneous speed readings when a second vehicle with an operating CB AM transceiver is driven within 3 m (10 ft) of the stationary radar patrol vehicle while the radar device is operating and tracking a just-acquired distant target traveling at a speed of 80 km/h (50 mph).

§1221.24 Speed Accuracy

When tested in accordance with §1221.82, each radar device shall display the correct speed of a target vehicle traveling at speeds of 32 to 160 km/h (20 to 100 mph) within +2,-3 km/h (+1,-2 mph) when operated in the stationary mode. Type II, IV, and VI radar devices shall display the correct patrol vehicle speed and target vehicle speed of a radar target within ±3 km/h (±2 mph) when operated in the moving mode.

Subpart C - Test Procedures

CONDITIONS

§1221.31 Conditions

Allow all measurement equipment to warm up until the system has achieved sufficient stability to perform the measurement.

radio transceiver, properly installed in the radar-equipped patrol vehicle, is operated while the patrol vehicle is standing still with the radar device in the stationary mode and tracking a just-acquired distant target traveling at a speed of 80 km/h (50 mph). The radar device shall not display any erroneous readings when a handheld police FM transceiver with an integral antenna is operated inside the patrol vehicle under similar circumstances.

(b) Citizens Band (CB) AM Transceiver Interference. The radar device shall not display any erroneous speed readings when a CB AM transceiver properly installed in the radar equipped patrol vehicle is operated while the patrol vehicle is standing still with the radardevice in the stationary mode and tracking a just-acquired distant target traveling at a speed of 80 km/h (50 mph).

(c) Adjacent Vehicle Radiofrequency Interference.

(1) The radar device shall not display any erroneous speed readings when a second vehicle with an operating police FM transceiver is driven within 3 m (10 ft) of the stationary patrol vehicle while the radar device is operating and tracking a just-acquired distant target traveling at a speed of 80 km/h (50 mph).

(2) The radar device shall not display any erroneous speed readings when a second vehicle with an operating CB AM transceiver is driven within 3 m (10 ft) of the stationary radar patrol vehicle while the radar device is operating and tracking a just-acquired distant target traveling at a speed of 80 km/h (50 mph).

§1221.24 Speed Accuracy

When tested in accordance with §1221.82, each radar device shall display the correct speed of a target vehicle traveling at speeds of 32 to 160 km/h (20 to 100 mph) within +2,-3 km/h (+1,-2 mph) when operated in the stationary mode. Type II, IV, and VI radar devices shall display the correct patrol vehicle speed and target vehicle speed of a radar target within ±3 km/h (±2 mph) when operated in the moving mode.

Subpart C - Test Procedures

CONDITIONS

§1221.31 Conditions

Allow all measurement equipment to warm up until the system has achieved sufficient stability to perform the measurement.

radio transceiver, properly installed in the radar-equipped patrol vehicle, is operated while the patrol vehicle is standing still with the radar device in the stationary mode and tracking a just-acquired distant target traveling at a speed of 80 km/h (50 mph). The radar device shall not display any erroneous readings when a handheld police FM transceiver with an integral antenna is operated inside the patrol vehicle under similar circumstances.

(b) Citizens Band (CB) AM Transceiver Interference. The radar device shall not display any erroneous speed readings when a CB AM transceiver properly installed in the radar equipped patrol vehicle is operated while the patrol vehicle is standing still with the radardevice in the stationary mode and tracking a just-acquired distant target traveling at a speed of 80 km/h (50 mph).

(c) Adjacent Vehicle Radiofrequency Interference.

(1) The radar device shall not display any erroneous speed readings when a second vehicle with an operating police FM transceiver is driven within 3 m (10 ft) of the stationary patrol vehicle while the radar device is operating and tracking a just-acquired distant target traveling at a speed of 80 km/h (50 mph).

(2) The radar device shall not display any erroneous speed readings when a second vehicle with an operating CB AM transceiver is driven within 3 m (10 ft) of the stationary radar patrol vehicle while the radar device is operating and tracking a just-acquired distant target traveling at a speed of 80 km/h (50 mph).

§1221.24 Speed Accuracy

When tested in accordance with §1221.82, each radar device shall display the correct speed of a target vehicle traveling at speeds of 32 to 160 km/h (20 to 100 mph) within +2,-3 km/h (+1,-2 mph) when operated in the stationary mode. Type II, IV, and VI radar devices shall display the correct patrol vehicle speed and target vehicle speed of a radar target within ±3 km/h (±2 mph) when operated in the moving mode.

Subpart C - Test Procedures

CONDITIONS

§1221.31 Conditions

Allow all measurement equipment to warm up until the system has achieved sufficient stability to perform the measurement.

radio transceiver, properly installed in the radar-equipped patrol vehicle, is operated while the patrol vehicle is standing still with the radar device in the stationary mode and tracking a just-acquired distant target traveling at a speed of 80 km/h (50 mph). The radar device shall not display any erroneous readings when a handheld police FM transceiver with an integral antenna is operated inside the patrol vehicle under similar circumstances.

(b) Citizens Band (CB) AM Transceiver Interference. The radar device shall not display any erroneous speed readings when a CB AM transceiver properly installed in the radar equipped patrol vehicle is operated while the patrol vehicle is standing still with the radardevice in the stationary mode and tracking a just-acquired distant target traveling at a speed of 80 km/h (50 mph).

(c) Adjacent Vehicle Radiofrequency Interference.

(1) The radar device shall not display any erroneous speed readings when a second vehicle with an operating police FM transceiver is driven within 3 m (10 ft) of the stationary patrol vehicle while the radar device is operating and tracking a just-acquired distant target traveling at a speed of 80 km/h (50 mph).

(2) The radar device shall not display any erroneous speed readings when a second vehicle with an operating CB AM transceiver is driven within 3 m (10 ft) of the stationary radar patrol vehicle while the radar device is operating and tracking a just-acquired distant target traveling at a speed of 80 km/h (50 mph).

§1221.24 Speed Accuracy

When tested in accordance with §1221.82, each radar device shall display the correct speed of a target vehicle traveling at speeds of 32 to 160 km/h (20 to 100 mph) within +2,-3 km/h (+1,-2 mph) when operated in the stationary mode. Type II, IV, and VI radar devices shall display the correct patrol vehicle speed and target vehicle speed of a radar target within ±3 km/h (±2 mph) when operated in the moving mode.

Subpart C - Test Procedures

CONDITIONS

§1221.31 Conditions

Allow all measurement equipment to warm up until the system has achieved sufficient stability to perform the measurement.

§1221.54 sawtooth Wave Generator

The sawtooth wave generator shall be capable of producing **20 V** p-p across a **50 Ω** impedance. It shall also be capable of producing a sawtooth wave having a positive-going, leading-edge, fast rise-time wave of less than 1 **μs** over a frequency range of **200** to **16 000** Hz.

§1221.55 FM Signal Generator

The FM signal generator shall be capable of producing **20 mW** output power at frequencies from **30** to **500 MHz** and shall have an audiofrequency modulation variable from **500** to **5000** Hz, a **50 Ω** output impedance, a maximum standing-wave ratio of **1.2** and a variable output level. It shall also have a deviation meter or calibrated control for determining the peak frequency deviation with an uncertainty no greater than **10** percent.

§1221.56 AM Signal Generator

The AM signal generator shall cover the **25** to **30** MHz frequency range, be capable of producing at least **20 mW** output power and **99** percent modulation with frequencies from **500** to **5000** Hz, and have a **50 Ω** output impedance and a maximum **standing-**wave ratio of **1.2.** The generator should include a digital **frequency** counter having an uncertainty no greater than 1 part in **10**° and an AM monitor or calibrated control for determining the AM percentage with an uncertainty no greater than **10** percent. If an integral frequency counter is not included, a separate frequency counter having the required accuracy shall be provided.

§1221.57 Power Meter

The power meter shall have **50 Ω** feed-through detectors for frequencies from **20** to **500** MHz and the ability to handle powers up to **50** W with an uncertainty of **10** percent or less.

§1221.58 Stopwatch

The stopwatch shall have a **0.1** s resolution or better and a total time accumulation of at least 5 min.

§1221.59 Oscilloscope

The oscilloscope shall have a vertical input sensitivity **(y-**axis) of **10 mV/cm** or better and a frequency response of at least 5 MHZ. It shall also have a horizontal input (x-axis) having at least **20 kHz** frequency response and a horizontal sweeptime base resolution of **100 μs/cm** or better. It shall provide a reference voltage, having an uncertainty of 5 percent or less, for calibrating the vertical input.

§1221.54 sawtooth Wave Generator

The sawtooth wave generator shall be capable of producing **20 V** p-p across a **50 Ω** impedance. It shall also be capable of producing a sawtooth wave having a positive-going, leading-edge, fast rise-time wave of less than 1 **μs** over a frequency range of **200** to **16 000** Hz.

§1221.55 FM Signal Generator

The FM signal generator shall be capable of producing **20 mW** output power at frequencies from **30** to **500 MHz** and shall have an audiofrequency modulation variable from **500** to **5000** Hz, a **50 Ω** output impedance, a maximum standing-wave ratio of **1.2** and a variable output level. It shall also have a deviation meter or calibrated control for determining the peak frequency deviation with an uncertainty no greater than **10** percent.

§1221.56 AM Signal Generator

The AM signal generator shall cover the **25** to **30** MHz frequency range, be capable of producing at least **20 mW** output power and **99** percent modulation with frequencies from **500** to **5000** Hz, and have a **50 Ω** output impedance and a maximum **standing-**wave ratio of **1.2.** The generator should include a digital **frequency** counter having an uncertainty no greater than 1 part in **10**° and an AM monitor or calibrated control for determining the AM percentage with an uncertainty no greater than **10** percent. If an integral frequency counter is not included, a separate frequency counter having the required accuracy shall be provided.

§1221.57 Power Meter

The power meter shall have **50 Ω** feed-through detectors for frequencies from **20** to **500** MHz and the ability to handle powers up to **50** W with an uncertainty of **10** percent or less.

§1221.58 Stopwatch

The stopwatch shall have a **0.1** s resolution or better and a total time accumulation of at least 5 min.

§1221.59 Oscilloscope

The oscilloscope shall have a vertical input sensitivity **(y-**axis) of **10 mV/cm** or better and a frequency response of at least 5 MHZ. It shall also have a horizontal input (x-axis) having at least **20 kHz** frequency response and a horizontal sweeptime base resolution of **100 μs/cm** or better. It shall provide a reference voltage, having an uncertainty of 5 percent or less, for calibrating the vertical input.

in front of the antenna with the flat side parallel to the direction of propagation. The radar must display the speed corresponding to the tuning fork frequency within the allowable tolerance in the target vehicle speed window.

(b) Types II, IV, and VI Radar Devices (Opposite Direction Moving Mode). Place the radar in the moving mode of operation, orienting the antenna so that no moving targets are available to the radar. Activate the lower speed tuning fork by striking it on a nonmetallic object and hold it 2.5 to 10 cm (1 to 4 in) in front of the antenna with the flat side parallel to the direction of propagation. The radar should display the tuning fork speed in the patrol vehicle speed window. Strike the higher speed tuning fork on a nonmetallic object and place in front of the antenna alongside the lower speed tuning fork. The speed corresponding to the low-speed tuning fork frequency must remain in the patrol vehicle speed display window and the target vehicle speed display must indicate the difference in speed between the two tuning forks within the allowable tolerance.

(c) Types-II, IV, and VI Radar Devices (Same Direction Moving Mode). Place the radar in the following mode of operation, orienting the antenna so that no moving targets are available to the radar. Activate the higher speed tuning fork by striking it on a nonmetallic object and hold it 2.5 to 10 cm (1 to 4 in) in front of the antenna with a flat side parallel to the direction of propagation. The radar must display the speed corresponding to the tuning fork frequency within the allowable tolerance in the patrol display window. Strike the lower speed tuning fork on a nonmetallic object and place in front of the antenna alongside the high speed tuning fork. The speed corresponding to the high speed tuning fork frequency must remain in the patrol vehicle speed display window and the target vehicle speed display must indicate the sum of the two tuning forks.

§1221.73 Microwave Transmission Tests

(a) Transmission Frequency and Frequency Stability Test

(1) Place the radar device in the anechoic chamber and connect the test equipment as shown in figure 3 (see page A-4). Position the pickup horn antenna in the radar beam a sufficient distance away from the radar device to prevent overdriving the microwave frequency counter. Adjust the standard supply voltage to its nominal value and record the microwave frequency.

(2) Reduce the standard supply voltage by 20 percent of its nominal value (8 percent for NiCd battery pack) or to the manufacturer's low voltage value, allow it to stabilize for 2 min, and repeat the above procedure.

in front of the antenna with the flat side parallel to the direction of propagation. The radar must display the speed corresponding to the tuning fork frequency within the allowable tolerance in the target vehicle speed window.

(b) Types II, IV, and VI Radar Devices (Opposite Direction Moving Mode). Place the radar in the moving mode of operation, orienting the antenna so that no moving targets are available to the radar. Activate the lower speed tuning fork by striking it on a nonmetallic object and hold it 2.5 to 10 cm (1 to 4 in) in front of the antenna with the flat side parallel to the direction of propagation. The radar should display the tuning fork speed in the patrol vehicle speed window. Strike the higher speed tuning fork on a nonmetallic object and place in front of the antenna alongside the lower speed tuning fork. The speed corresponding to the low-speed tuning fork frequency must remain in the patrol vehicle speed display window and the target vehicle speed display must indicate the difference in speed between the two tuning forks within the allowable tolerance.

(c) Types-II, IV, and VI Radar Devices (Same Direction Moving Mode). Place the radar in the following mode of operation, orienting the antenna so that no moving targets are available to the radar. Activate the higher speed tuning fork by striking it on a nonmetallic object and hold it 2.5 to 10 cm (1 to 4 in) in front of the antenna with a flat side parallel to the direction of propagation. The radar must display the speed corresponding to the tuning fork frequency within the allowable tolerance in the patrol display window. Strike the lower speed tuning fork on a nonmetallic object and place in front of the antenna alongside the high speed tuning fork. The speed corresponding to the high speed tuning fork frequency must remain in the patrol vehicle speed display window and the target vehicle speed display must indicate the sum of the two tuning forks.

§1221.73 Microwave Transmission Tests

(a) Transmission Frequency and Frequency Stability Test

(1) Place the radar device in the anechoic chamber and connect the test equipment as shown in figure 3 (see page A-4). Position the pickup horn antenna in the radar beam a sufficient distance away from the radar device to prevent overdriving the microwave frequency counter. Adjust the standard supply voltage to its nominal value and record the microwave frequency.

(2) Reduce the standard supply voltage by 20 percent of its nominal value (8 percent for NiCd battery pack) or to the manufacturer's low voltage value, allow it to stabilize for 2 min, and repeat the above procedure.

For a linearly polarized antenna, calculate the half-power beamwidth, A, using the following equation to correct for the change in radial distance.

$$A = 2F \arctan (D/2R)$$

where A is the angular half-power beamwidth, F is a factor to correct for the change in radius (from the graphed curve of fig. 6), D is the average perpendicular distance between the half-power points P_1 (figure 6, see page A-7) and R is the radius from the front of the antenna to the point at which the maximum power density was measured.

For a circularly polarized antenna, move the radar device along a line parallel to the vertical axis of the radar device, measure the distance between these half-power points. Average the distances between the horizontal and vertical half-power readings and calculate the half-power beamwidth using the above equation to correct for any change in radial distance.

(2) Antenna Horizontal Beamwidth Test (Alternate Method for Circularly Polarized Radar Devices Only). Position the radar device on a turntable in the anechoic chamber, energize it using the standard supply voltage and allow it to stabilize for 2 min. Position a pickup horn antenna on the maximum power axis of the radar device antenna. Locate the horn in the far-field region at a distance close enough to indicate full scale or a reference level on a sensitive scale of the power meter. Record the protractor angle indication on the radar mounting turntable. Rotate the turntable with the radar until the power meter indicates one-half the power read at the center of the beam, record the turntable angle and then rotate the turntable back through center, continuing until the power meter again indicates one-half the power read at the center and record the turntable angle. The change in the angle readings of the turntable between the two half-power points shall be taken as the antenna beamwidth measurement.

(e) Antenna Near-Field Power Density Test. Connect the radar device to the test equipment as shown in figure 7 (see page A-8). Being careful not to vary the distance from the antenna, use the isotropic probe to search for the maximum signal strength in the plane 5 cm (2 in) from the antenna aperture or lens face of the antenna and perpendicular to the longitudinal axis of the radar beam. Move the probe to obtain the maximum reading and record it. For a NiCd battery powered radar device designed to accept an optional 12 V automotive adapter, repeat this test utilizing the adapter and a standard supply voltage of 13.6 V.

(f) Standby/Operate Switch. When a radar unit is so equipped, place the hand-held radar device in the stationary mode

For a linearly polarized antenna, calculate the half-power beamwidth, A, using the following equation to correct for the change in radial distance.

$$A = 2F \arctan (D/2R)$$

where A is the angular half-power beamwidth, F is a factor to correct for the change in radius (from the graphed curve of fig. 6), D is the average perpendicular distance between the half-power points P_1 (figure 6, see page A-7) and R is the radius from the front of the antenna to the point at which the maximum power density was measured.

For a circularly polarized antenna, move the radar device along a line parallel to the vertical axis of the radar device, measure the distance between these half-power points. Average the distances between the horizontal and vertical half-power readings and calculate the half-power beamwidth using the above equation to correct for any change in radial distance.

(2) Antenna Horizontal Beamwidth Test (Alternate Method for Circularly Polarized Radar Devices Only). Position the radar device on a turntable in the anechoic chamber, energize it using the standard supply voltage and allow it to stabilize for 2 min. Position a pickup horn antenna on the maximum power axis of the radar device antenna. Locate the horn in the far-field region at a distance close enough to indicate full scale or a reference level on a sensitive scale of the power meter. Record the protractor angle indication on the radar mounting turntable. Rotate the turntable with the radar until the power meter indicates one-half the power read at the center of the beam, record the turntable angle and then rotate the turntable back through center, continuing until the power meter again indicates one-half the power read at the center and record the turntable angle. The change in the angle readings of the turntable between the two half-power points shall be taken as the antenna beamwidth measurement.

(e) Antenna Near-Field Power Density Test. Connect the radar device to the test equipment as shown in figure 7 (see page A-8). Being careful not to vary the distance from the antenna, use the isotropic probe to search for the maximum signal strength in the plane 5 cm (2 in) from the antenna aperture or lens face of the antenna and perpendicular to the longitudinal axis of the radar beam. Move the probe to obtain the maximum reading and record it. For a NiCd battery powered radar device designed to accept an optional 12 V automotive adapter, repeat this test utilizing the adapter and a standard supply voltage of 13.6 V.

(f) Standby/Operate Switch. When a radar unit is so equipped, place the hand-held radar device in the stationary mode

initially at a frequency of 30 Hz and increased at a uniform rate to 60 Hz in 2.5 min, then decreased at a uniform rate to 30 Hz in 2.5 min. Conduct the appropriate radar device tuning fork test (§1221.72) during the last 5 min cycle.

(4) Repeat this procedure for each of the other two directions.

§1221.75 Low Supply Voltage Test

Connect the radar device to the standard supply voltage as shown in figure 4 (see page A-5) [cf §1221.31(c)] and energize it in the stationary mode. Allow the radar device to stabilize for 2 min, then conduct the appropriate radar device tuning fork test (§1221.72) and measure the radar speed generated by the tuning fork frequency. Continue to measure the radar speed and decrease the supply voltage at the rate of approximately 0.2 V/s until the low-voltage alert is activated. Record the supply voltage level. Verify that no erroneous speed reading is present. Increase the supply voltage until the low voltage indicator is deactivated, and again conduct the appropriate radar device tuning fork test to verify that the radar device displays the same speed reading as at standard supply voltage.

Also, for NiCd powered radar devices designed to accept a 12 V automotive adapter, verify that when using this adapter the device works properly down to the low voltage alert on the radar device.

§1221.76 Doppler Audio Tests

Each time a test method requires that the radar device be connected to the simulator, the radar device must also be connected to the standard supply voltage source and properly aligned on the simulator. See figure 8 (see page A-9) for a block diagram of this measurement setup. The following procedures shall be followed:

(a) Audio Output and Volume Control Test

(1) Connect the radar device to the simulator, energize it in the stationary mode and disable the squelch function. Establish a simulated target and vary the target speed to verify that the Doppler audio signal is correlated with the target speed. In a single target situation, stationary mode, the Doppler audio signal should be a single clear tone. Move a metal plate in the radar beam without interrupting the signal beam and ascertain that the interference motion from the plate is heard in the Doppler audio signal. For types II, IV, and VI radar devices, switch to moving mode operation and use the simulator to establish a simulated moving mode situation. Vary the target speed control and verify that the simulated target Doppler audio

initially at a frequency of 30 Hz and increased at a uniform rate to 60 Hz in 2.5 min, then decreased at a uniform rate to 30 Hz in 2.5 min. Conduct the appropriate radar device tuning fork test (§1221.72) during the last 5 min cycle.

(4) Repeat this procedure for each of the other two directions.

§1221.75 Low Supply Voltage Test

Connect the radar device to the standard supply voltage as shown in figure 4 (see page A-5) [cf §1221.31(c)] and energize it in the stationary mode. Allow the radar device to stabilize for 2 min, then conduct the appropriate radar device tuning fork test (§1221.72) and measure the radar speed generated by the tuning fork frequency. Continue to measure the radar speed and decrease the supply voltage at the rate of approximately 0.2 V/s until the low-voltage alert is activated. Record the supply voltage level. Verify that no erroneous speed reading is present. Increase the supply voltage until the low voltage indicator is deactivated, and again conduct the appropriate radar device tuning fork test to verify that the radar device displays the same speed reading as at standard supply voltage.

Also, for NiCd powered radar devices designed to accept a 12 V automotive adapter, verify that when using this adapter the device works properly down to the low voltage alert on the radar device.

§1221.76 Doppler Audio Tests

Each time a test method requires that the radar device be connected to the simulator, the radar device must also be connected to the standard supply voltage source and properly aligned on the simulator. See figure 8 (see page A-9) for a block diagram of this measurement setup. The following procedures shall be followed:

(a) Audio Output and Volume Control Test

(1) Connect the radar device to the simulator, energize it in the stationary mode and disable the squelch function. Establish a simulated target and vary the target speed to verify that the Doppler audio signal is correlated with the target speed. In a single target situation, stationary mode, the Doppler audio signal should be a single clear tone. Move a metal plate in the radar beam without interrupting the signal beam and ascertain that the interference motion from the plate is heard in the Doppler audio signal. For types II, IV, and VI radar devices, switch to moving mode operation and use the simulator to establish a simulated moving mode situation. Vary the target speed control and verify that the simulated target Doppler audio

Each time a test method requires that the radar device be connected to the simulator, the radar device must also be connected to the standard supply voltage source and properly aligned on the simulator. See figure 8 (see page A-9) for a block diagram of this measurement setup. Activate the radar device in the stationary mode, determine the minimum target signal level necessary to establish a simulated 80 km/h (50 mph) target speed, then increase the simulated target signal level by 3 dB (1.5 dB if using a microwave attenuator). Turn the simulated signal off and proceed with each of the tests.

When moving mode signals are needed, set the simulated closing speed signal to zero, activate the radar device in the appropriate moving mode, determine the minimum patrol signal level necessary to establish a simulated 88 km/h (55 mph) patrol speed, then increase the simulated patrol signal level by 10 dB (5 dB if using a microwave attenuator). Turn the simulated patrol signal off and proceed with each of the tests.

(a) Display readability tests. Position the radar device with the illuminated face perpendicular to the optical axis of the photometer as shown in figure 9 (see page A-12). Position a light source at an angle of 30° from the perpendicular such that 10 780 lux (lumens per square meter) (1000 fc) of illumination will be measured across the face of the display. Turn on the display using the standard supply voltage and use a tuning fork to place a speed reading on the display. Lock in the reading and darken the room. Vary the intensity of the display to obtain the maximum luminance contrast. Use the photometer to measure the luminance of an individual character, at either a bar or a single dot, and its background. Repeat this measurement for three locations representing, if possible, the left, center and right portions of the display. Separately average the luminance values for the character and for the background. Calculate the daylight luminance contrast, C, using the formula

$$C = \frac{L_1 - L_2}{L_2},$$

or

$$C = \frac{L_2 - L_1}{L_1}$$

if L_2 is greater than L_1, where L_1 is the average luminance of the display element, and L_2 is the average luminance of the background immediately surrounding the display element. Repeat for an illumination angle of 45° and then for 60°. All three calculated luminance contrast values must be within the specification.

Each time a test method requires that the radar device be connected to the simulator, the radar device must also be connected to the standard supply voltage source and properly aligned on the simulator. See figure 8 (see page A-9) for a block diagram of this measurement setup. Activate the radar device in the stationary mode, determine the minimum target signal level necessary to establish a simulated 80 km/h (50 mph) target speed, then increase the simulated target signal level by 3 dB (1.5 dB if using a microwave attenuator). Turn the simulated signal off and proceed with each of the tests.

When moving mode signals are needed, set the simulated closing speed signal to zero, activate the radar device in the appropriate moving mode, determine the minimum patrol signal level necessary to establish a simulated 88 km/h (55 mph) patrol speed, then increase the simulated patrol signal level by 10 dB (5 dB if using a microwave attenuator). Turn the simulated patrol signal off and proceed with each of the tests.

(a) Display readability tests. Position the radar device with the illuminated face perpendicular to the optical axis of the photometer as shown in figure 9 (see page A-12). Position a light source at an angle of 30° from the perpendicular such that 10 780 lux (lumens per square meter) (1000 fc) of illumination will be measured across the face of the display. Turn on the display using the standard supply voltage and use a tuning fork to place a speed reading on the display. Lock in the reading and darken the room. Vary the intensity of the display to obtain the maximum luminance contrast. Use the photometer to measure the luminance of an individual character, at either a bar or a single dot, and its background. Repeat this measurement for three locations representing, if possible, the left, center and right portions of the display. Separately average the luminance values for the character and for the background. Calculate the daylight luminance contrast, C, using the formula

$$C = \frac{L_1 - L_2}{L_2},$$

or

$$C = \frac{L_2 - L_1}{L_1}$$

if L_2 is greater than L_1, where L_1 is the average luminance of the display element, and L_2 is the average luminance of the background immediately surrounding the display element. Repeat for an illumination angle of 45° and then for 60°. All three calculated luminance contrast values must be within the specification.

(e) Speed Display Transfer Test. Connect the radar device to the simulator, set it to the moving mode and establish an opposite direction moving mode simulated patrol and target speeds. Activate the speed-lock switch and discontinue the simulated signals. Using each of the available controls, attempt to transfer the patrol speed reading to the target speed display. Repeat for same direction moving mode (if appropriate).

(f) Signal Processing Channel Sensitivity Tests

(1) Connect the radar device to the simulator and establish a 56 km/h (35 mph) simulated target speed. Do not move the radar device for the remainder of this test. Place the radar device in the stationary mode, increase the target signal by adjusting the generator output or audio attenuator and record the target speed minimum signal level needed to acquire the target. Repeat for target speeds of 32 km/h (20 mph) or the lowest target speed specified by the manufacturer, whichever is lower, to 144 km/h (90 mph) at 16 km/h (10 mph) increments. Continue this test in 16 km/h (10 mph) increments up to the maximum target speed specified by the manufacturer.

(2) For types II, IV, and VI radar devices, place the radar device in the moving mode (opposite direction moving mode if appropriate), establish a 40 km/h (25 mph) simulated patrol vehicle speed and then increase the patrol speed signal level by 10 dB (5 dB if using a microwave attenuator). Establish a 64 km/h (40 mph) simulated target, acquire it and record the target speed minimum signal level needed to reacquire the target. Repeat for target speeds of 96 to 144 km/h (60 to 90 mph) at 16 km/h (10 mph) increments. Repeat the procedure for a simulated patrol vehicle speed of 80 km/h (50 mph) and target speeds of 96 to 144 km/h (60 to 90 mph) at 16 km/h (10 mph) increments. Continue this test at 16 km/h (10 mph) increments up to the maximum target speed specified by the manufacturer.

(3) For types II, IV, and VI radar devices having same direction moving mode capability, place the radar device in the faster-target, same direction moving mode, establish a 64 km/h (40 mph) simulated patrol speed, then increase the patrol speed signal level by 10 dB (5 dB if using a microwave attenuator). Establish a 16 km/h (10 mph) simulated difference Doppler signal, acquire the 80 km/h (50 mph) simulated target speed, and record the target speed minimum signal level needed to reacquire the target. Repeat for a simulated difference Doppler signal of 40 km/h (25 mph), giving a simulated target display of 104 km/h (65 mph).

Repeat the above procedure at a simulated patrol speed of 88 km/h (55 mph) and target speeds of 104 to 128 km/h (65 to 80 mph) at 8 km/h (5 mph) increments. Verify that the radar device will display a 96 km/h (60 mph) target.

(e) Speed Display Transfer Test. Connect the radar device to the simulator, set it to the moving mode and establish an opposite direction moving mode simulated patrol and target speeds. Activate the speed-lock switch and discontinue the simulated signals. Using each of the available controls, attempt to transfer the patrol speed reading to the target speed display. Repeat for same direction moving mode (if appropriate).

(f) Signal Processing Channel Sensitivity Tests

(1) Connect the radar device to the simulator and establish a 56 km/h (35 mph) simulated target speed. Do not move the radar device for the remainder of this test. Place the radar device in the stationary mode, increase the target signal by adjusting the generator output or audio attenuator and record the target speed minimum signal level needed to acquire the target. Repeat for target speeds of 32 km/h (20 mph) or the lowest target speed specified by the manufacturer, whichever is lower, to 144 km/h (90 mph) at 16 km/h (10 mph) increments. Continue this test in 16 km/h (10 mph) increments up to the maximum target speed specified by the manufacturer.

(2) For types II, IV, and VI radar devices, place the radar device in the moving mode (opposite direction moving mode if appropriate), establish a 40 km/h (25 mph) simulated patrol vehicle speed and then increase the patrol speed signal level by 10 dB (5 dB if using a microwave attenuator). Establish a 64 km/h (40 mph) simulated target, acquire it and record the target speed minimum signal level needed to reacquire the target. Repeat for target speeds of 96 to 144 km/h (60 to 90 mph) at 16 km/h (10 mph) increments. Repeat the procedure for a simulated patrol vehicle speed of 80 km/h (50 mph) and target speeds of 96 to 144 km/h (60 to 90 mph) at 16 km/h (10 mph) increments. Continue this test at 16 km/h (10 mph) increments up to the maximum target speed specified by the manufacturer.

(3) For types II, IV, and VI radar devices having same direction moving mode capability, place the radar device in the faster-target, same direction moving mode, establish a 64 km/h (40 mph) simulated patrol speed, then increase the patrol speed signal level by 10 dB (5 dB if using a microwave attenuator). Establish a 16 km/h (10 mph) simulated difference Doppler signal, acquire the 80 km/h (50 mph) simulated target speed, and record the target speed minimum signal level needed to reacquire the target. Repeat for a simulated difference Doppler signal of 40 km/h (25 mph), giving a simulated target display of 104 km/h (65 mph).

Repeat the above procedure at a simulated patrol speed of 88 km/h (55 mph) and target speeds of 104 to 128 km/h (65 to 80 mph) at 8 km/h (5 mph) increments. Verify that the radar device will display a 96 km/h (60 mph) target.

device will not process and display any target speed reading over this range of closing speeds. If simulated patrol speed and simulated closing speed are harmonics of each other, decrease patrol speed by 3.2 km/h (2 mph).

(h) Patrol Channel Speed Display

(1) Low and High Speed Tests. Connect the radar device to the simulator. With the radar device in off or standby, establish a simulated target speed signal at the required low speed. Switch the radar device to the opposite direction moving mode. Adjust the patrol speed signal to the acquisition level and verify that it will acquire and measure patrol speeds down to the required low speed. With the radar device still in the opposite-direction moving mode, establish a patrol speed of 112 km/h (70 mph) and verify that the radar device will acquire and measure patrol speeds up to the required high speed. Repeat for same direction moving mode (if appropriate).

(2) Patrol Vehicle Speed Chancre Test

(i) Connect the radar device to the simulator and establish a patrol speed of 32 km/h (20 mph). Place the radar device in the opposite direction moving mode and display the correct patrol speed. Increase the simulator patrol speed at a rate of 4.8 km/h per second (3 mph per second) for 5 s and verify that the patrol speed display reading agrees with the simulated patrol speed during this 5 s period. Repeat this procedure for initial patrol speeds of 48 and 64 km/h (30 and 40 mph). Repeat for same direction moving mode (if appropriate).

(ii) With the radar device still connected to the simulator, establish a patrol speed of 88 km/h (55 mph). Place the radar device in the opposite direction moving mode and display the correct patrol speed. Decrease the simulator patrol speed at a rate of 4.8 km/h per second (3 mph per second) for 5 s and verify that the patrol speed reading agrees with the simulated patrol speed during this 5 s period. Repeat this procedure for an initial patrol speed of 64 km/h (40 mph).

(i) Auxiliary Display Tests

(1) Connect the radar device together with the auxiliary printer or remote display module to the simulator and conduct the display speed lock test (paragraph (b) of this section) and the display clear test (paragraph (c) of this section). Verify that the remote module displays are cleared when reconnected to the radar device.

device will not process and display any target speed reading over this range of closing speeds. If simulated patrol speed and simulated closing speed are harmonics of each other, decrease patrol speed by 3.2 km/h (2 mph).

(h) Patrol Channel Speed Display

(1) Low and High Speed Tests. Connect the radar device to the simulator. With the radar device in off or standby, establish a simulated target speed signal at the required low speed. Switch the radar device to the opposite direction moving mode. Adjust the patrol speed signal to the acquisition level and verify that it will acquire and measure patrol speeds down to the required low speed. With the radar device still in the opposite-direction moving mode, establish a patrol speed of 112 km/h (70 mph) and verify that the radar device will acquire and measure patrol speeds up to the required high speed. Repeat for same direction moving mode (if appropriate).

(2) Patrol Vehicle Speed Chancre Test

(i) Connect the radar device to the simulator and establish a patrol speed of 32 km/h (20 mph). Place the radar device in the opposite direction moving mode and display the correct patrol speed. Increase the simulator patrol speed at a rate of 4.8 km/h per second (3 mph per second) for 5 s and verify that the patrol speed display reading agrees with the simulated patrol speed during this 5 s period. Repeat this procedure for initial patrol speeds of 48 and 64 km/h (30 and 40 mph). Repeat for same direction moving mode (if appropriate).

(ii) With the radar device still connected to the simulator, establish a patrol speed of 88 km/h (55 mph). Place the radar device in the opposite direction moving mode and display the correct patrol speed. Decrease the simulator patrol speed at a rate of 4.8 km/h per second (3 mph per second) for 5 s and verify that the patrol speed reading agrees with the simulated patrol speed during this 5 s period. Repeat this procedure for an initial patrol speed of 64 km/h (40 mph).

(i) Auxiliary Display Tests

(1) Connect the radar device together with the auxiliary printer or remote display module to the simulator and conduct the display speed lock test (paragraph (b) of this section) and the display clear test (paragraph (c) of this section). Verify that the remote module displays are cleared when reconnected to the radar device.

device will not process and display any target speed reading over this range of closing speeds. If simulated patrol speed and simulated closing speed are harmonics of each other, decrease patrol speed by 3.2 km/h (2 mph).

(h) Patrol Channel Speed Display

(1) Low and High Speed Tests. Connect the radar device to the simulator. With the radar device in off or standby, establish a simulated target speed signal at the required low speed. Switch the radar device to the opposite direction moving mode. Adjust the patrol speed signal to the acquisition level and verify that it will acquire and measure patrol speeds down to the required low speed. With the radar device still in the opposite-direction moving mode, establish a patrol speed of 112 km/h (70 mph) and verify that the radar device will acquire and measure patrol speeds up to the required high speed. Repeat for same direction moving mode (if appropriate).

(2) Patrol Vehicle Speed Chancre Test

(i) Connect the radar device to the simulator and establish a patrol speed of 32 km/h (20 mph). Place the radar device in the opposite direction moving mode and display the correct patrol speed. Increase the simulator patrol speed at a rate of 4.8 km/h per second (3 mph per second) for 5 s and verify that the patrol speed display reading agrees with the simulated patrol speed during this 5 s period. Repeat this procedure for initial patrol speeds of 48 and 64 km/h (30 and 40 mph). Repeat for same direction moving mode (if appropriate).

(ii) With the radar device still connected to the simulator, establish a patrol speed of 88 km/h (55 mph). Place the radar device in the opposite direction moving mode and display the correct patrol speed. Decrease the simulator patrol speed at a rate of 4.8 km/h per second (3 mph per second) for 5 s and verify that the patrol speed reading agrees with the simulated patrol speed during this 5 s period. Repeat this procedure for an initial patrol speed of 64 km/h (40 mph).

(i) Auxiliary Display Tests

(1) Connect the radar device together with the auxiliary printer or remote display module to the simulator and conduct the display speed lock test (paragraph (b) of this section) and the display clear test (paragraph (c) of this section). Verify that the remote module displays are cleared when reconnected to the radar device.

(60 mph). Then increase the simulated signal level by 3 dB, turn on the FM signal generator, and repeat the above procedure. Verify that no erroneous readings appear at any time. Repeat for same direction moving mode (if appropriate).

(3) Repeat (1) and (2) above using a constant modulation frequency of 1500 Hz while slowly varying the FM signal generator output from 0 to 10 mW and back to 0 mW. Repeat (1) and (2) above using a constant modulation frequency of 3100 Hz.

(4) Repeat the entire test for frequencies of 40 and 460 MHz.

(d) Citizens Band (CB) AM Transceiver Interference Tests

(1) Connect the AM signal generator to the line impedance stabilization network, as shown in figure 12 (see page A-15) [cf §1221.31(c)], such that the rf signals are impressed on the radar device power line. Place the radar device in the stationary mode, establish a simulated target of 64 km/h (40 mph), then increase the simulated signal level by 3 dB. Set the generator to a frequency of 27 MHz with an output of 5 mW, as measured by the power meter, with no more than 1 mW reflected power, and adjust the generator modulation to 99 percent. Slowly vary the modulation frequency from 200 to 10 000 Hz and back to 200 Hz. Verify that no erroneous readings appear at any time.

(2) For types II, IV, and VI radar devices, switch to the opposite direction moving mode, turn off the AM signal generator, establish a patrol speed of 80 km/h (50 mph) (10 dB above minimum patrol signal) and a target speed of 96 km/h (60 mph). Then increase the simulated signal level by 3 dB, turn on the AM signal generator, and repeat the above procedure. Verify that no erroneous readings appear at any time. Repeat for same direction moving mode (if appropriate).

(3) Repeat (1) and (2) above using a constant modulation frequency of 1500 Hz while slowly varying the AM signal generator output from 0 to 5 mW and back to 0 mW. Repeat (1) and (2) above using a constant modulation frequency of 3100 Hz.

§1221.81 Radar Device Operational Tests

Install the radar device in the patrol vehicle in accordance with the manufacturers instructions, using extreme care in positioning the antenna. The patrol vehicle shall be of the type normally used for law enforcement purposes, with heavy duty components. It shall have at least one standard police FM transceiver and an antenna installed in accordance with the

instructions provided by the transceiver manufacturer. This test must be conducted in an environment free of extraneous moving targets such as large ventilation fans.

For a NiCd powered radar device designed to also accept an optional 12 V automotive adapter, perform the police FM transceiver interference test (a) utilizing the NiCd battery pack and then repeat the test utilizing the automotive adapter.

The citizens band (CB) AM transceiver interference test (b) and the adjacent vehicle radio interference test (c) are performed utilizing only the NiCd battery pack.

(a) Police FM Transceiver Interference Test

(1) Start the patrol vehicle engine and set it to a fast idle. Wait 30 s, place the radar device in the stationary mode and switch on the FM transceiver. Track a just-acquired distant target traveling at a speed of 80 km/h (50 mph), activate the push-to-talk switch and use the slide whistle to transmit tones via the microphone. Slowly vary the tone of the slide whistle from 500 to 3000 Hz and back to 500 Hz, observing the target speed display for possible erroneous readings. Repeat two more times.

(2) Turn off the FM transceiver and repeat the procedure using a handheld FM transceiver with an integral antenna and an output power of 2 W or more positioned at the patrol vehicle driver's location.

(b) Citizens Band (CB) AM Transceiver Interference Test.

Mount a 4 W minimum output CB transceiver in a typical front seat location and install the antenna as recommended by the manufacturer. Connect the CB transceiver power leads to the vehicle battery or the ignition switch circuitry but not to the cigarette lighter. Start the patrol vehicle engine and set it to a fast idle. Place the radar device in the stationary mode and track a just-acquired distant target traveling at a speed of 80 km/h (50 mph). Switch on the CB transceiver, set it to channel 20, activate the push-to-talk switch, and use the slide whistle to transmit tones via the microphone. Slowly vary the tone from 500 to 3000 Hz and back to 500 Hz observing the target speed display for possible erroneous readings. Repeat for channels 1 and 40.

(c) Adjacent Vehicle Radiofrequency Interference Test

(1) Start the patrol vehicle engine and set it to a fast idle. Place the radar device in the stationary mode and track a just-acquired distant target traveling at a speed of 80 km/h (50 mph). From a distance of at least 15 m (50 ft),

instructions provided by the transceiver manufacturer. This test must be conducted in an environment free of extraneous moving targets such as large ventilation fans.

For a NiCd powered radar device designed to also accept an optional 12 V automotive adapter, perform the police FM transceiver interference test (a) utilizing the NiCd battery pack and then repeat the test utilizing the automotive adapter.

The citizens band (CB) AM transceiver interference test (b) and the adjacent vehicle radio interference test (c) are performed utilizing only the NiCd battery pack.

(a) Police FM Transceiver Interference Test

(1) Start the patrol vehicle engine and set it to a fast idle. Wait 30 s, place the radar device in the stationary mode and switch on the FM transceiver. Track a just-acquired distant target traveling at a speed of 80 km/h (50 mph), activate the push-to-talk switch and use the slide whistle to transmit tones via the microphone. Slowly vary the tone of the slide whistle from 500 to 3000 Hz and back to 500 Hz, observing the target speed display for possible erroneous readings. Repeat two more times.

(2) Turn off the FM transceiver and repeat the procedure using a handheld FM transceiver with an integral antenna and an output power of 2 W or more positioned at the patrol vehicle driver's location.

(b) Citizens Band (CB) AM Transceiver Interference Test.

Mount a 4 W minimum output CB transceiver in a typical front seat location and install the antenna as recommended by the manufacturer. Connect the CB transceiver power leads to the vehicle battery or the ignition switch circuitry but not to the cigarette lighter. Start the patrol vehicle engine and set it to a fast idle. Place the radar device in the stationary mode and track a just-acquired distant target traveling at a speed of 80 km/h (50 mph). Switch on the CB transceiver, set it to channel 20, activate the push-to-talk switch, and use the slide whistle to transmit tones via the microphone. Slowly vary the tone from 500 to 3000 Hz and back to 500 Hz observing the target speed display for possible erroneous readings. Repeat for channels 1 and 40.

(c) Adjacent Vehicle Radiofrequency Interference Test

(1) Start the patrol vehicle engine and set it to a fast idle. Place the radar device in the stationary mode and track a just-acquired distant target traveling at a speed of 80 km/h (50 mph). From a distance of at least 15 m (50 ft),

(d) For types II, IV, and VI radar devices, switch the radar device to the opposite direction moving mode and station the patrol vehicle and target vehicle at least **400** m **(1312 ft)** apart and at **opposite ends** of the measured distance such that each vehicle can make a constant speed run through the same **400** m **(1312 ft)** portion. Make three moving mode, constant speed, approaching runs in each direction, recording the measured distance, the speedometer readings of each vehicle, and the radar device speed display reading. A stopwatch may be used to obtain the true vehicle speed. Average the six speedometer and speed display readings. Calculate the true target vehicle speed, the target vehicle correction factor and the indicated radar speed reading. Repeat this procedure using a patrol speed of **32** km/h **(20** mph) and a target speed of **88** km/h **(55** mph) and using a patrol speed of **88** km/h **(55** mph) and a target speed of **112** km/h **(70** mph).

(e) For radar devices with a same direction moving mode, switch to this mode and repeat the procedure given in **(d)** above.

(d) For types II, IV, and VI radar devices, switch the radar device to the opposite direction moving mode and station the patrol vehicle and target vehicle at least **400** m **(1312 ft)** apart and at **opposite ends** of the measured distance such that each vehicle can make a constant speed run through the same **400** m **(1312 ft)** portion. Make three moving mode, constant speed, approaching runs in each direction, recording the measured distance, the speedometer readings of each vehicle, and the radar device speed display reading. A stopwatch may be used to obtain the true vehicle speed. Average the six speedometer and speed display readings. Calculate the true target vehicle speed, the target vehicle correction factor and the indicated radar speed reading. Repeat this procedure using a patrol speed of **32** km/h **(20** mph) and a target speed of **88** km/h **(55** mph) and using a patrol speed of **88** km/h **(55** mph) and a target speed of **112** km/h **(70** mph).

(e) For radar devices with a same direction moving mode, switch to this mode and repeat the procedure given in **(d)** above.

Table 1. Continued

	Performance Characteristics	Minimum Requirement
P.	Patrol Channel Speed Displays	32 km/h (20 mph) max low speed 112 km/h (70 mph) min high speed
Q.	Patrol Channel Speed Changes	±2 km/h (±1 mph) for 4.8 km/h (3 mph) per second
R.	Accuracy, Stationary Mode	+2, -3 km/h (+1, -2 mph)
S.	Accuracy, Moving Mode	±3 km/h (±2 mph)

Table 1. Continued

	Performance Characteristics	Minimum Requirement
P.	Patrol Channel Speed Displays	32 km/h (20 mph) max low speed 112 km/h (70 mph) min high speed
Q.	Patrol Channel Speed Changes	±2 km/h (±1 mph) for 4.8 km/h (3 mph) per second
R.	Accuracy, Stationary Mode	+2, -3 km/h (+1, -2 mph)
S.	Accuracy, Moving Mode	±3 km/h (±2 mph)

APPENDIX

APPENDIX

Figure Captions

Figure 1. Line impedance stabilization network (LISN).

Figure 2. Block diagram for tuning fork calibration.

Figure 3. Block diagram for transmission frequency and frequency stability measurements.

Figure 4. Block diagram for input current, low supply voltage and power surge measurement.

Figure 5. Block diagram for antenna beamwidth measurements.

Figure 6. Antenna beamwidth correction factor, F.

Figure 7. Block diagram for antenna near-field power density measurement.

Figure 8. Block diagram for the simulator test range used in Doppler audio, power surge, speed display, and electromagnetic interference measurements.

Figure 8a. Schematic of balanced modulator shown in figure 8.

Figure 8b. Schematic of 0-90 degree phase shifter shown in figure 8.

Figure 9. Setup for display readability measurements.

Figure 10. Block diagram for the simulated vehicle alternator interference measurement.

Figure 11. Block diagram for the simulated vehicle ignition, air conditioner/heater and windshield wiper interference measurements.

Figure 12. Block diagram for the simulated police FM transceiver and the citizens band AM transceiver interference measurements.

Figure Captions

Figure 1. Line impedance stabilization network (LISN).

Figure 2. Block diagram for tuning fork calibration.

Figure 3. Block diagram for transmission frequency and frequency stability measurements.

Figure 4. Block diagram for input current, low supply voltage and power surge measurement.

Figure 5. Block diagram for antenna beamwidth measurements.

Figure 6. Antenna beamwidth correction factor, F.

Figure 7. Block diagram for antenna near-field power density measurement.

Figure 8. Block diagram for the simulator test range used in Doppler audio, power surge, speed display, and electromagnetic interference measurements.

Figure 8a. Schematic of balanced modulator shown in figure 8.

Figure 8b. Schematic of 0-90 degree phase shifter shown in figure 8.

Figure 9. Setup for display readability measurements.

Figure 10. Block diagram for the simulated vehicle alternator interference measurement.

Figure 11. Block diagram for the simulated vehicle ignition, air conditioner/heater and windshield wiper interference measurements.

Figure 12. Block diagram for the simulated police FM transceiver and the citizens band AM transceiver interference measurements.

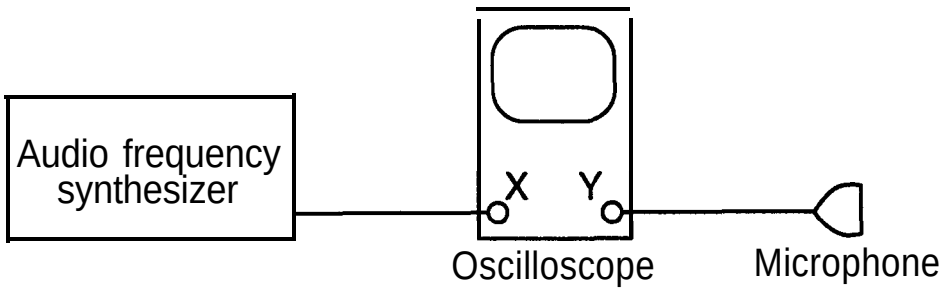

Figure 2. Block diagram for tuning fork calibration.

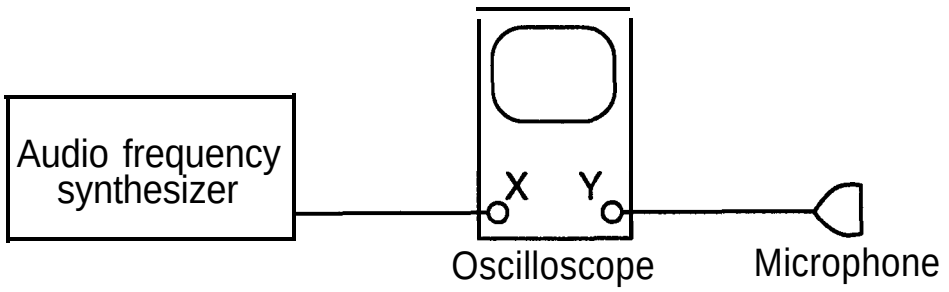

Figure 2. Block diagram for tuning fork calibration.

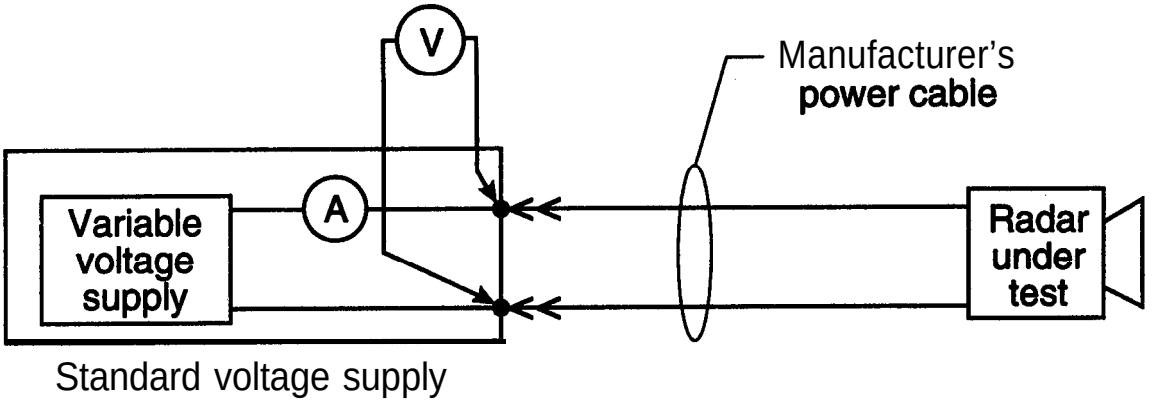

Figure 4. Block diagram for input current, low supply voltage and power surge measurement.

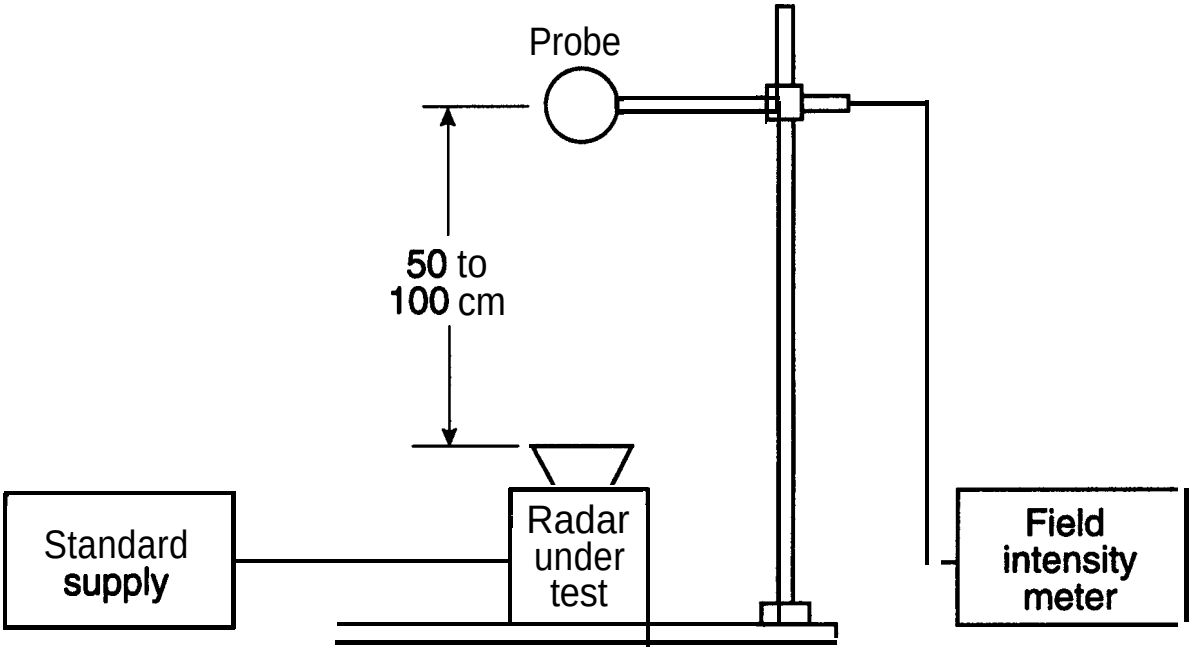

Figure 5. Block diagram for antenna beamwidth measurements.

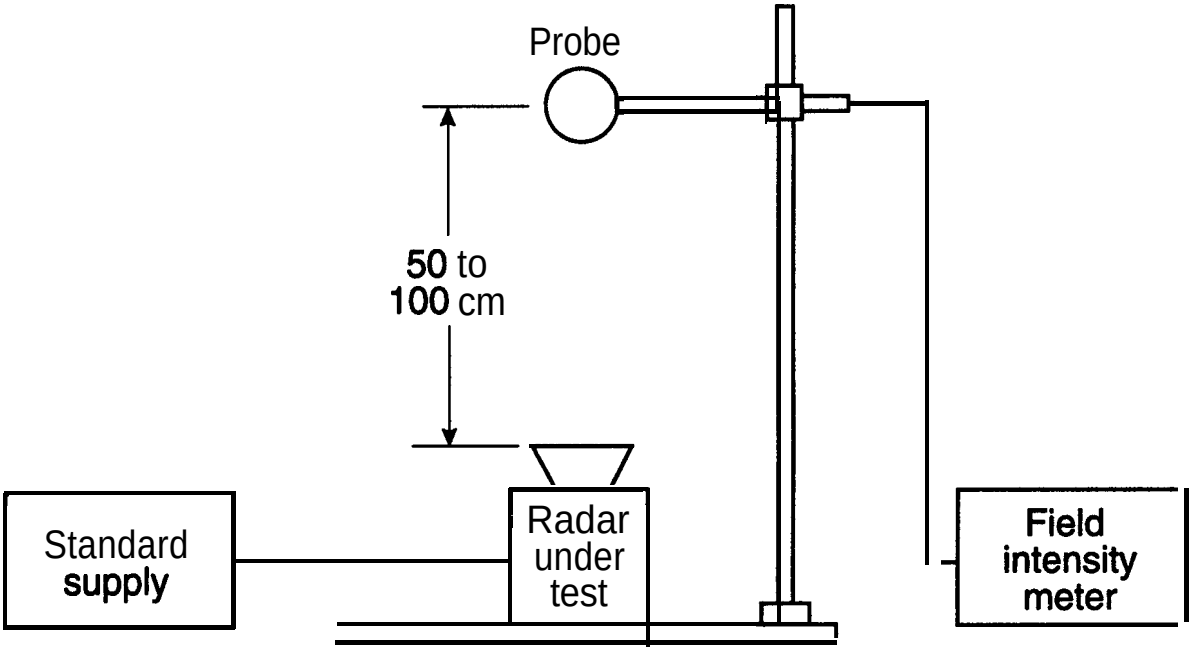

Figure 5. Block diagram for antenna beamwidth measurements.

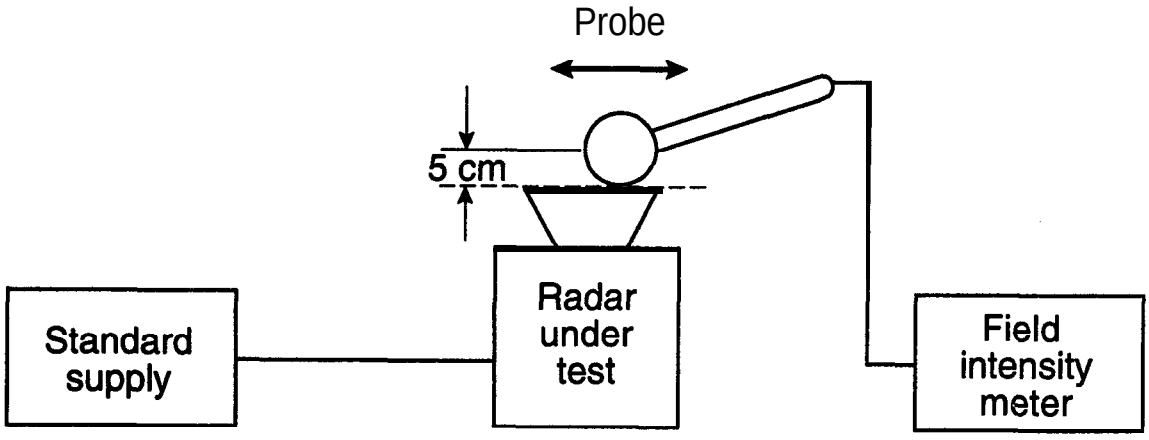

Figure 7. Block diagram for antenna near-field power density measurement.

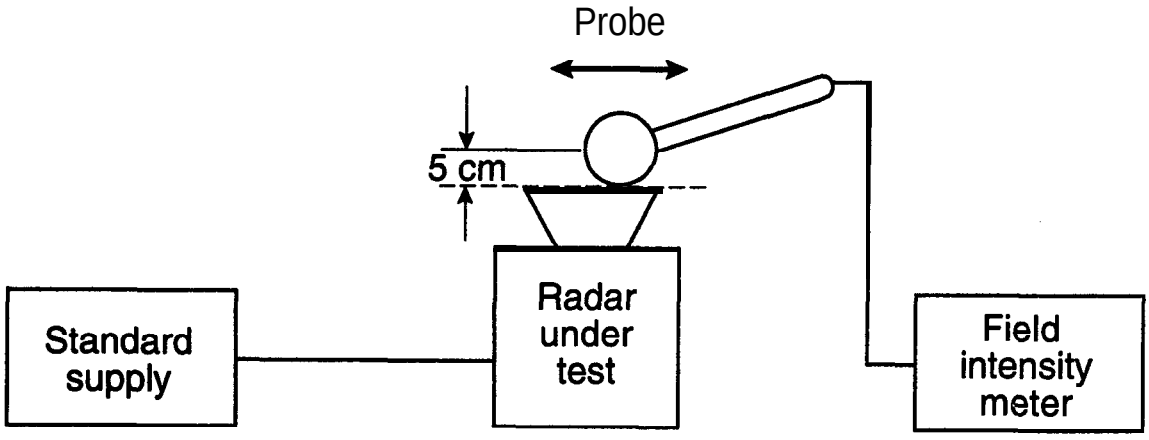

Figure 7. Block diagram for antenna near-field power density measurement.

Balanced Modulator

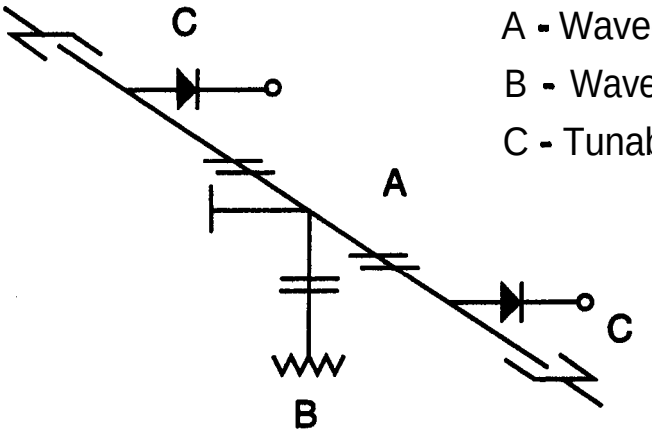

A - Waveguide magic - tee
B - Waveguide termination
C - Tunable diode detectors

Figure 8a. Schematic of balanced modulator shown in figure 8.

Balanced Modulator

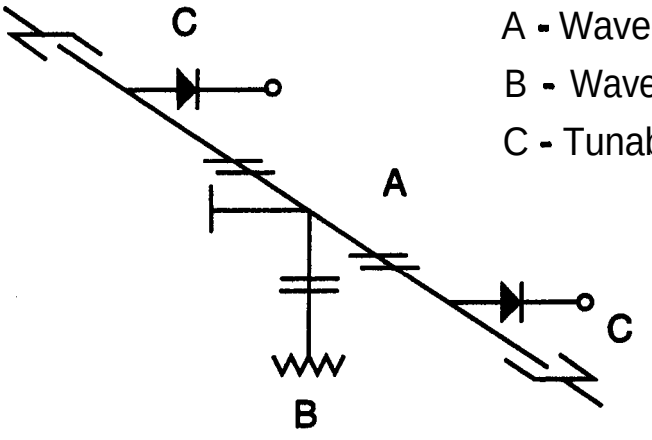

A - Waveguide magic - tee
B - Waveguide termination
C - Tunable diode detectors

Figure 8a. Schematic of balanced modulator shown in figure 8.

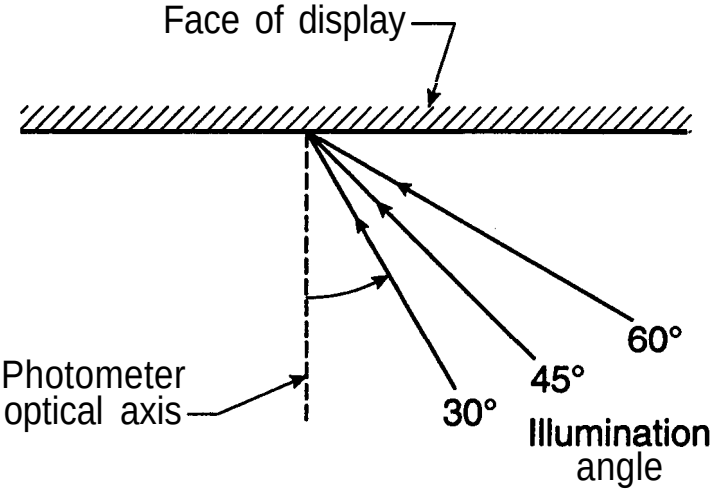

Figure 9. Setup for display readability measurements.

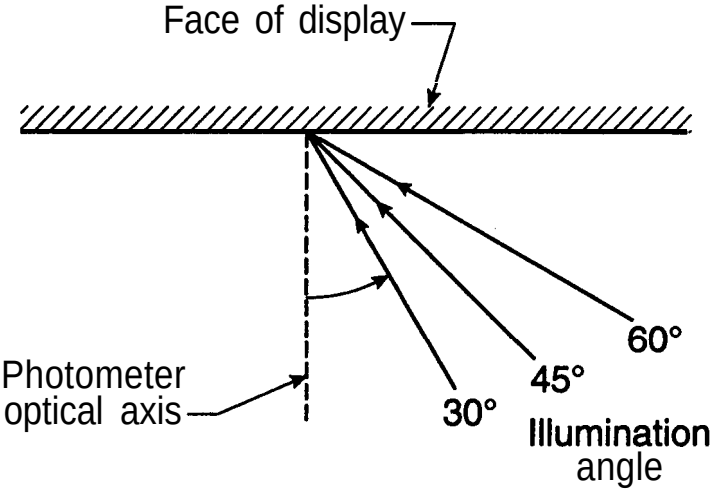

Figure 9. Setup for display readability measurements.

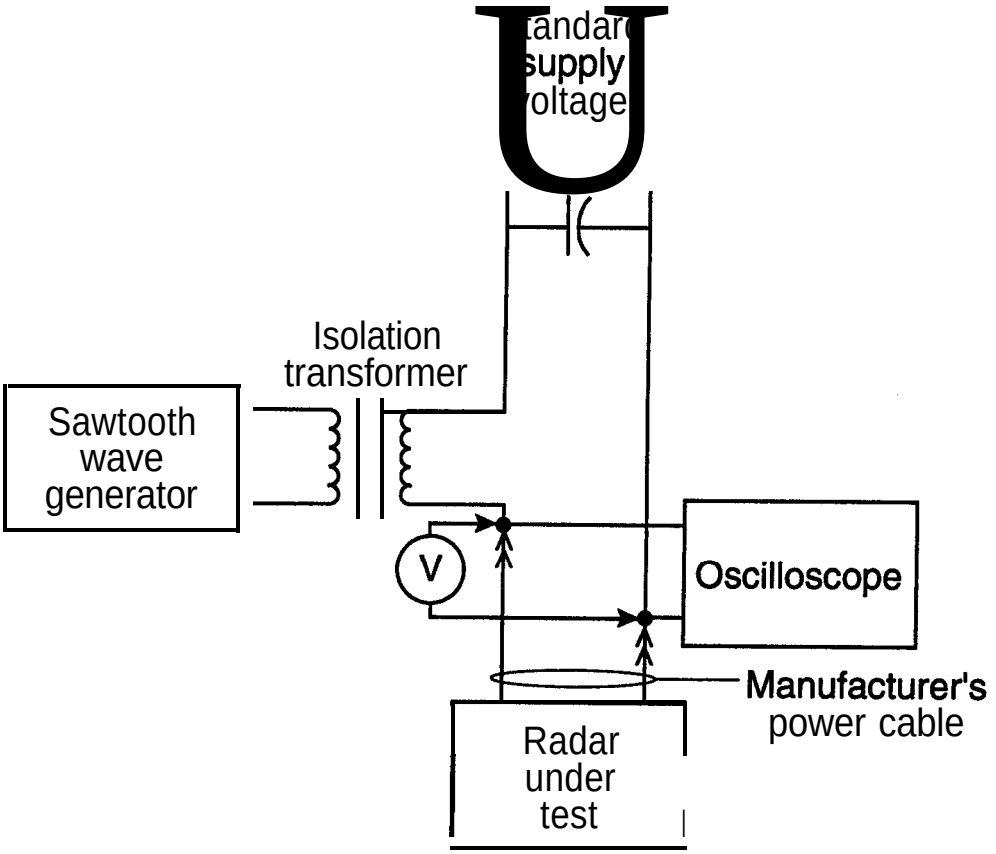

Figure 11. Block diagram for the simulated vehicle ignition, air conditioner/heater and windshield wiper interference measurements.

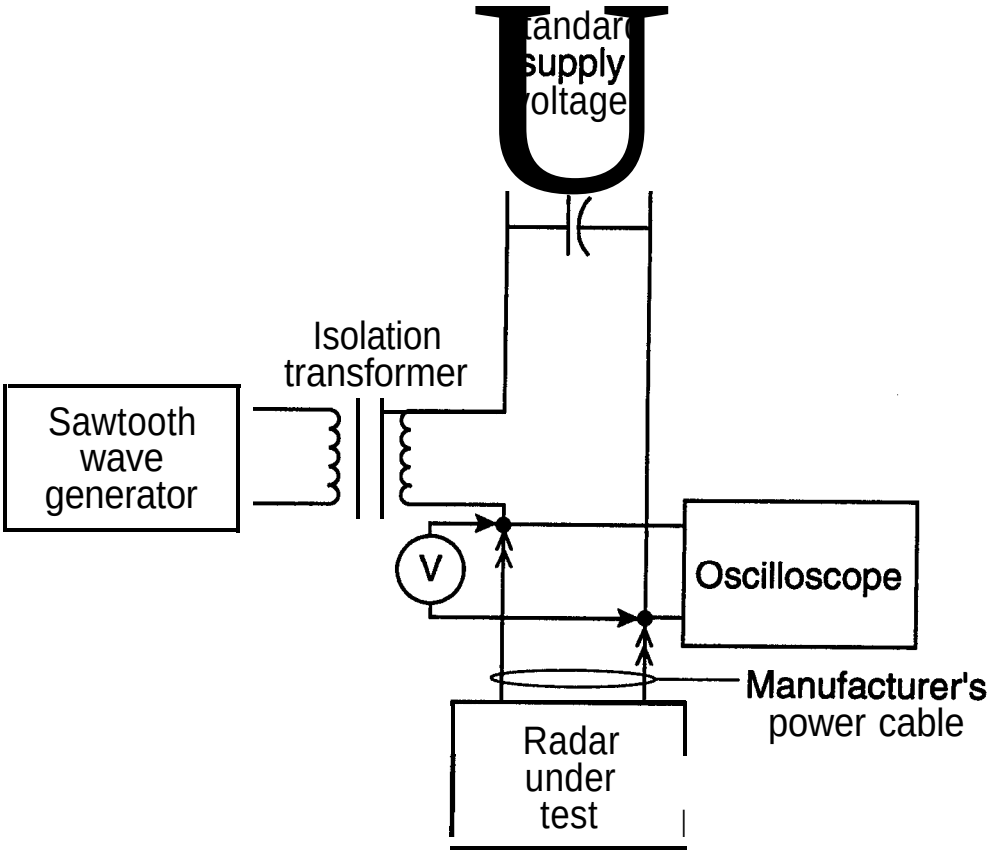

Figure 11. Block diagram for the simulated vehicle ignition, air conditioner/heater and windshield wiper interference measurements.

Appendix E -- Health Concerns Information Package

All of the 5,310 units tested had power densities which were below applicable standards and each unit tested appeared on the approved IACP Consumer Products List. Only radar units which meet both the ANSI and the Occupational Safety and Health Administration (OSHA) standards qualify to be placed on the International Association of Chiefs of Police Consumer Products List.

NHTSA has recommended that law enforcement agencies purchase only those units appearing on the IACP list since the list's inception in 1984. NHTSA has also recommended, since 1982, that radar units be recertified a minimum of every three years. Power level tests are an integral part of IACP laboratory testing. For answers to questions concerning maintenance testing of radar units, contact the IACP at (800) THE-IACP or (800) 843-4227.

In summary, NHTSA continues to recommend having officers avoid unnecessary exposure to activated radar antennas. Another important recommendation is for police departments to periodically test radar units. A review of these and other sound operating procedures for the use of police traffic radar are listed below:

- Radar antennas, both mounted and hand-held units, should be aimed only at target vehicles and ***not*** blocked by human body parts.

- Radar antennas, both mounted and hand-held units, must be properly secured to protect officers during emergency vehicle maneuvers.

- Radar units should be turned off, or placed in "standby" mode, when not in use.

- Only radar units on the IACP's Consumer Product List should be purchased.

- To comply with the Model Minimum Performance Specifications for Police Traffic Radar Devices (DOT HS-807 415) radar units should be tested a minimum of once every three years.

- Only officers who have successfully completed a certified training program in the proper use of radar should operate units.

NHTSA's Police Traffic Services Division staff is available to respond to questions from law enforcement officials about this issue at (202) 366-4295. The media should contact the NHTSA Office of Public and Consumer Affairs at (202) 366-9550 for additional information.

All of the 5,310 units tested had power densities which were below applicable standards and each unit tested appeared on the approved IACP Consumer Products List. Only radar units which meet both the ANSI and the Occupational Safety and Health Administration (OSHA) standards qualify to be placed on the International Association of Chiefs of Police Consumer Products List.

NHTSA has recommended that law enforcement agencies purchase only those units appearing on the IACP list since the list's inception in 1984. NHTSA has also recommended, since 1982, that radar units be recertified a minimum of every three years. Power level tests are an integral part of IACP laboratory testing. For answers to questions concerning maintenance testing of radar units, contact the IACP at (800) THE-IACP or (800) 843-4227.

In summary, NHTSA continues to recommend having officers avoid unnecessary exposure to activated radar antennas. Another important recommendation is for police departments to periodically test radar units. A review of these and other sound operating procedures for the use of police traffic radar are listed below:

- Radar antennas, both mounted and hand-held units, should be aimed only at target vehicles and ***not*** blocked by human body parts.

- Radar antennas, both mounted and hand-held units, must be properly secured to protect officers during emergency vehicle maneuvers.

- Radar units should be turned off, or placed in "standby" mode, when not in use.

- Only radar units on the IACP's Consumer Product List should be purchased.

- To comply with the Model Minimum Performance Specifications for Police Traffic Radar Devices (DOT HS-807 415) radar units should be tested a minimum of once every three years.

- Only officers who have successfully completed a certified training program in the proper use of radar should operate units.

NHTSA's Police Traffic Services Division staff is available to respond to questions from law enforcement officials about this issue at (202) 366-4295. The media should contact the NHTSA Office of Public and Consumer Affairs at (202) 366-9550 for additional information.

The key question is whether the risk of getting a particular form of cancer is greater among people who work with the radar devices than among the rest of the population. And the only way to answer that question is to compare the cancer rates among radar-using police officers with people who don't work with radar, or with the cancer rates that would be expected in the general population.

FDA has made a preliminary comparison between the number of cancers reported in police officers who use traffic radar devices and cancer rates in the general population. Based on case reports we have so far, the comparison does not appear to show a greater cancer rate among the police, but it is too soon to conclude that there is no risk.

What's FDA doing to address the question of cancer risk?

FDA will continue to evaluate the research performed by microwave scientists around the world to see if their results apply to traffic radar devices. In addition, FDA will work with police organizations to collect more data about the cancer experience of police officers, to see whether they are developing more than the expected number of cancers. To assist us in this effort, any known cases of cancer in police officers using radar should be reported to FDA by calling 1-800-638-6725. Be sure to provide as much information as possible, including the type of radar unit used, how long the individual worked with radar devices, and the specific type of cancer.

In the meantime, what can be done to reduce the risk, if there is one?

Although it is not known for sure whether traffic radar devices can produce health problems, police officers can take some simple steps which will sharply reduce their exposure to the low-level microwave radiation which these devices emit.

1. Always point the device away from your body, or your partner's body, while it is turned on.

2. Mount fixed radar antennas so that the beam is not pointed at any occupant of the patrol car.

3. Whenever possible, turn off a hand-held unit when it is not in use. If your unit has a "standby" mode, always use it when not measuring the speed of a vehicle. Never rest the unit against your body when it is turned on.

4. When it is on, try to avoid pointing the device toward metal surfaces inside your car, such as the floor or a door, to avoid microwave reflection. (Measurements have shown that the radiation reflected from nonmetallic surfaces, such as glass in the car's windows, is much less intense than that reflected from metal surfaces.)

Again, there is no proof at this point that traffic radar devices can be harmful to the police officers who use them. Future information may reveal that these devices are indeed harmless. But until the question is settled, taking the simple precautions outlined above should reduce any possible risk. In the meantime, FDA will continue to provide updates as more information becomes available.

The key question is whether the risk of getting a particular form of cancer is greater among people who work with the radar devices than among the rest of the population. And the only way to answer that question is to compare the cancer rates among radar-using police officers with people who don't work with radar, or with the cancer rates that would be expected in the general population.

FDA has made a preliminary comparison between the number of cancers reported in police officers who use traffic radar devices and cancer rates in the general population. Based on case reports we have so far, the comparison does not appear to show a greater cancer rate among the police, but it is too soon to conclude that there is no risk.

What's FDA doing to address the question of cancer risk?

FDA will continue to evaluate the research performed by microwave scientists around the world to see if their results apply to traffic radar devices. In addition, FDA will work with police organizations to collect more data about the cancer experience of police officers, to see whether they are developing more than the expected number of cancers. To assist us in this effort, any known cases of cancer in police officers using radar should be reported to FDA by calling 1-800-638-6725. Be sure to provide as much information as possible, including the type of radar unit used, how long the individual worked with radar devices, and the specific type of cancer.

In the meantime, what can be done to reduce the risk, if there is one?

Although it is not known for sure whether traffic radar devices can produce health problems, police officers can take some simple steps which will sharply reduce their exposure to the low-level microwave radiation which these devices emit.

1. Always point the device away from your body, or your partner's body, while it is turned on.

2. Mount fixed radar antennas so that the beam is not pointed at any occupant of the patrol car.

3. Whenever possible, turn off a hand-held unit when it is not in use. If your unit has a "standby" mode, always use it when not measuring the speed of a vehicle. Never rest the unit against your body when it is turned on.

4. When it is on, try to avoid pointing the device toward metal surfaces inside your car, such as the floor or a door, to avoid microwave reflection. (Measurements have shown that the radiation reflected from nonmetallic surfaces, such as glass in the car's windows, is much less intense than that reflected from metal surfaces.)

Again, there is no proof at this point that traffic radar devices can be harmful to the police officers who use them. Future information may reveal that these devices are indeed harmless. But until the question is settled, taking the simple precautions outlined above should reduce any possible risk. In the meantime, FDA will continue to provide updates as more information becomes available.

The key question is whether the risk of getting a particular form of cancer is greater among people who work with the radar devices than among the rest of the population. And the only way to answer that question is to compare the cancer rates among radar-using police officers with people who don't work with radar, or with the cancer rates that would be expected in the general population.

FDA has made a preliminary comparison between the number of cancers reported in police officers who use traffic radar devices and cancer rates in the general population. Based on case reports we have so far, the comparison does not appear to show a greater cancer rate among the police, but it is too soon to conclude that there is no risk.

What's FDA doing to address the question of cancer risk?

FDA will continue to evaluate the research performed by microwave scientists around the world to see if their results apply to traffic radar devices. In addition, FDA will work with police organizations to collect more data about the cancer experience of police officers, to see whether they are developing more than the expected number of cancers. To assist us in this effort, any known cases of cancer in police officers using radar should be reported to FDA by calling 1-800-638-6725. Be sure to provide as much information as possible, including the type of radar unit used, how long the individual worked with radar devices, and the specific type of cancer.

In the meantime, what can be done to reduce the risk, if there is one?

Although it is not known for sure whether traffic radar devices can produce health problems, police officers can take some simple steps which will sharply reduce their exposure to the low-level microwave radiation which these devices emit.

1. Always point the device away from your body, or your partner's body, while it is turned on.

2. Mount fixed radar antennas so that the beam is not pointed at any occupant of the patrol car.

3. Whenever possible, turn off a hand-held unit when it is not in use. If your unit has a "standby" mode, always use it when not measuring the speed of a vehicle. Never rest the unit against your body when it is turned on.

4. When it is on, try to avoid pointing the device toward metal surfaces inside your car, such as the floor or a door, to avoid microwave reflection. (Measurements have shown that the radiation reflected from nonmetallic surfaces, such as glass in the car's windows, is much less intense than that reflected from metal surfaces.)

Again, there is no proof at this point that traffic radar devices can be harmful to the police officers who use them. Future information may reveal that these devices are indeed harmless. But until the question is settled, taking the simple precautions outlined above should reduce any possible risk. In the meantime, FDA will continue to provide updates as more information becomes available.