Side Impact Test and Evaluation Procedures for Roadside Structure Crash Tests

Publication No. FHWA-RD-92-062

May 1993

FHWA-RD-92-062 Side Impact Test Procedures

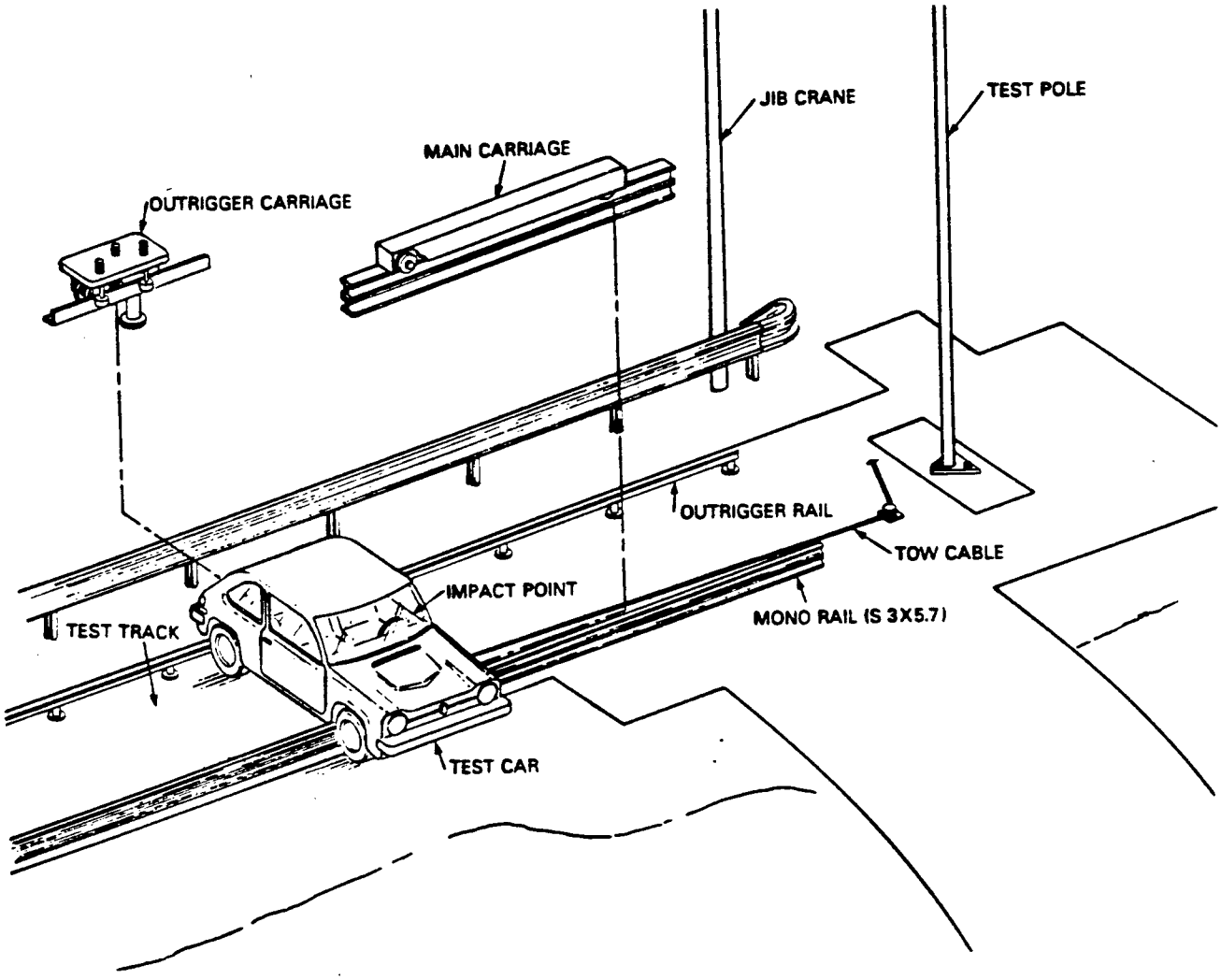

U.S. Department of Transportation
Federal Highway Administration

Research and Development
Turner-Fairbank Highway Research Center
6300 Georgetown Pike
McLean, Virginia 22101-2296

FOREWARD

This report documents a study to investigate the causes and severity of side impact collisions with fixed roadside objects like tress, utility poles and guardrails. This report is one of three that address various aspects of side impact collisions. The first report, Accident Data Analysis of Side-Impact Fixed Object Collisions (FHWA-RD-91-122), presents the results of an analysis of the Fatal Accidents Reporting System (FARS) and National Accident Sampling System (NASS) accident data bases. The second report, Side Impact Test and Evaluation Procedures for Roadside Structure Crash Tests (FHWA-RD-92-062), presents recommendations for performing side impact crash tests of roadside appurtenances. The third report in this series, Side Impact Crash Testing of Roadside Structures (FHWA-RD-92-079), presents the results of a side-impact crash testing program involving luminaries supports and guardrail terminals.

This report (FHWA-RD-92-062) contains recommendations for performing and evaluating side impact crash tests of roadside structures like supports, guardrail terminals, and utility poles. A 50 km/h full broadside tests using a small car is recommended. Evaluation criteria include recommendations for structural adequacy, occupant risk, and post collision trajectory. The occupant risk criteria use indicies obtained using anthropometric dummy tests devices.

This report will be of interest to practicing engineers concerned with the design and testing of roadside hardware. The report will also be of interest to researchers and policy makers in assessing the performance of common roadside hardware in side impact collisions.

Lyle Saxton
Director, Office of Safety and Traffic
Operations Research and Development

Technical Report Documentation Page

1. Report No. FHWA-RD-92-062	2. Government Accession No.	3. Recipient's Catalog No.
4. Title and Subtitle SIDE IMPACT CRASH TEST AND EVALUATION PROCEDURES FOR ROADSIDE STRUCTURES CRASH TESTS		5. Report Date April 1993
		6. Performing Organization Code
7. Author(s) M.H. Ray and J.F. Carney III		8. Performing Organization Report No.
9. Performing Organization Name and Address Vanderbilt University Department of Civil and Environmental Engineering Nashville, Tennessee 37235		10. Work Unit No. (TRAIS) 3A5f4032
		11. Contract or Grant No. DTFH-61-88-R-00092
12. Sponsoring Agency Name and Address Design Concepts Research Division Federal Highway Administration 6300 Georgetown Pike McLean, Virginia 22101-2296		13. Type of Report and Period Covered Final Report
		14. Sponsoring Agency Code

15. Supplementary Notes

Contracting Officer's Technical Representative: Martin Hargrave, HSR-20

16. Abstract

The report contains recommendations for performing and evaluating side impact crash tests of roadside structures like luminaire supports, guardrail terminals, and utility poles. A 50 km/h full broadside test using a small car is recommended. Evaluation criteria include recommendations for structural adequacy, occupant risk, and post collision trajectory. The occupant risk criteria use indicies obtained using anthropometric dummy test devices.

17. Key Words Change in velocity FOIL Luminaire support ESV pole Crash testing Side impact	18. Distribution Statement No restrictions. This document is available to the public through the National Technical Information Service, Springfield, Virginia 22161.

19. Security Classif. (of this report)	20. Security Classif. (of this page)	21. No. of Pages	22. Price
Unclassified	Unclassified	32	

Form DOT F 1700.7 (8-72) Reproduction of completed page authorized

SI* (MODERN METRIC) CONVERSION FACTORS

APPROXIMATE CONVERSIONS TO SI UNITS

Symbol	When You Know	Multiply By	To Find	Symbol
	LENGTH			
in	inches	25.4	millimetres	mm
ft	feet	0.305	metres	m
yd	yards	0.914	metres	m
mi	miles	1.61	kilometres	km
	AREA			
in^2	square inches	645.2	millimetres squared	mm^2
ft^2	square feet	0.093	metres squared	m^2
yd^2	square yards	0.836	metres squared	m^2
ac	acres	0.405	hectares	ha
mi^2	square miles	2.59	kilometres squared	km^2
	VOLUME			
fl oz	fluid ounces	29.57	millilitres	mL
gal	gallons	3.785	litres	L
ft^3	cubic feet	0.028	metres cubed	m^3
yd^3	cubic yards	0.765	metres cubed	m^3
	MASS			
oz	ounces	28.35	grams	g
lb	pounds	0.454	kilograms	kg
T	short tons (2000 lb)	0.907	megagrams	Mg
	TEMPERATURE (exact)			
°F	Fahrenheit temperature	5(F-32)/9	Celcius temperature	°C

NOTE: Volumes greater than 1000 L shall be shown in m^3.

APPROXIMATE CONVERSIONS FROM SI UNITS

Symbol	When You Know	Multiply By	To Find	Symbol
	LENGTH			
mm	millimetres	0.039	inches	in
m	metres	3.28	feet	ft
m	metres	1.09	yards	yd
km	kilometres	0.621	miles	mi
	AREA			
mm^2	millimetres squared	0.0016	square inches	in^2
m^2	metres squared	10.764	square feet	ft^2
ha	hectares	2.47	acres	ac
km^2	kilometres squared	0.386	square miles	mi^2
	VOLUME			
mL	millilitres	0.034	fluid ounces	fl oz
L	litres	0.264	gallons	gal
m^3	metres cubed	35.315	cubic feet	ft^3
m^3	metres cubed	1.308	cubic yards	yd^3
	MASS			
g	grams	0.035	ounces	oz
kg	kilograms	2.205	pounds	lb
Mg	megagrams	1.102	short tons (2000 lb)	T
	TEMPERATURE (exact)			
°C	Celcius temperature	1.8C + 32	Fahrenheit temperature	°F

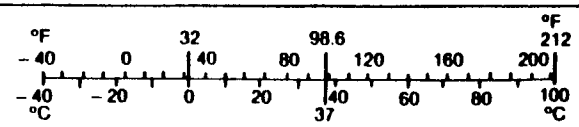

* SI is the symbol for the International System of Measurement

(Revised April 1989)

Contents

1 Introduction **1**

2 Test Parameters **2**
2.1 Test Facilities 2
2.2 Test Articles 4
2.3 Vehicle 4

3 Test Conditions **5**
3.1 General 5
3.2 Vehicle Orientation 6
3.3 Velocity 9
3.4 Impact Point 10
3.5 Anthropometric Dummy Position 11

4 Data Acquisition **12**
4.1 General 12
4.2 Anthropometric Dummy 13
4.3 Displacement Transducer 14

5 Evaluation Criteria **14**
5.1 General 14
5.2 Structural Adequacy Criteria 16
5.3 Occupant Risk Criteria 16
5.3.1 Vehicle Stability Criterion 18
5.3.2 Head Injury Criterion 18
5.3.3 Thoracic Trauma Criterion 20
5.3.4 Pelvis Acceleration Criterion 21
5.4 Vehicle Trajectory Criterion 22

6 Estimating Dummy Responses **22**
6.1 General 22
6.2 Thoracic Trauma Index 23
6.3 Head Injury Criteria 24

7 References **26**

List of Figures

1 Federal Outdoor Impact Laboratory [11]. 3
2 Directions of force in side impact collisions with fixed roadside objects involving the passenger compartment (1982-1985 NASS) [32]. 7
3 Vehicle orientation for side impact crash tests. 8
4 Displacement transducer. 15
5 Example displacement transducer output. 15
6 Coordinates for occupant position in side impact crash tests. 20

List of Tables

1 Test devices appropriate for side impact crash testing. 4
2 Side impact test vehicle. 5
3 Side impact test conditions. 6
4 Change in velocity statistics for side impact accidents with fixed objects (1982-1985 NASS) [32]. 9
5 Injury as a function of lateral change in velocity for side impacts centered on the passenger compartment. 10
6 Anthropometric side impact test dummy. 12
7 Data elements required in side impact crash tests. 13
8 Side impact crash test evaluation criteria. 17

1 Introduction

Side impact collisions involving fixed roadside objects like utility poles, trees and luminaire supports account for about 1600 fatalities and 60,000 injured vehicle occupants each year in the United States [28] [31]. This type of collision appears to cause a disproportionate number of fatalities and serious injuries [16][28] [31].

Many of the fixed objects struck on the roadside are intentionally placed there to provide lighting, power transmission, or to convey information. While usually serving a benign purpose, these objects can become a hazard if they are not designed to breakaway, collapse, or fracture in an impact with an errant vehicle. This report recommends testing conditions and evaluation criteria for side impact full-scale crash tests of structures placed on the roadside.

These recommendations supplement guidelines published by the National Cooperative Highway Research Program (NCHRP) [19] [29]. Where a particular guideline is not specifically addressed herein, the more general NCHRP guidelines should be applied. For example, test documentation is not specifically addressed so all documentation items recommended in the NCHRP guidelines should be included in a complete side impact test report. These recommendations are organized much like the latest NCHRP guidelines [29].

This document is based largely on research described in several other reports and papers [32] [27] [28] [31] [14]. The Fatal Accident Reporting System (FARS) and National Accident Sampling System (NASS) were investigated to learn about the characteristics of side impacts with fixed roadside objects [32] [28]. A number of side impact crash tests of luminaire supports and guardrail terminals were performed by the Federal Highway Administration (FHWA) during the past decade [27] [12] [10]. More information on particular aspects of these recommendations can be found in these other documents.

The National Highway Traffic and Safety Administration (NHTSA) has published rules on performing vehicle-to-vehicle side impact crash tests to evaluate the crashworthiness of production automobiles and light trucks [23] [21] [22]. Although there are important differences between the objectives of these NHTSA tests and the tests addressed by this report, the proposed NHTSA rules were used as a guide wherever possible in formulating these recommendations [24]. Any linkage that can be forged between NHTSA and FHWA side impact crash tests would be beneficial in the future as more is learned by both research communities about side impact collisions.

2 Test Parameters

2.1 Test Facilities

Side impact crash tests are significantly more difficult to perform than typical safety appurtenance crash tests. Accelerating the vehicle laterally requires test facilities that are not commonly found in the roadside research community. Side impact crash tests have been performed using:

- A differentially braked vehicle on a slick pavement [9].
- A cable-guided cable-towed carriage with the vehicle mounted sideways [2].
- A cable-towed wooden pallet with the vehicle resting sideways [33].
- A monorail and outrigger assembly with the vehicle resting on casters [11].

The Federal Outdoor Impact Laboratory (FOIL), shown in figure 1, was used for most of the side impact crash tests performed to assess the performance of roadside structures. The vehicle is transported on a monorail. A stabilizing outrigger rail runs parallel to the monorail. Rolling carriages are mounted on the underside of the vehicle body. The monorail and outrigger rail end approximately 2 m from the test device. The vehicle is brought up to the desired test speed using a drop-weight accelerator. The vehicle, with the attached roller carriages, drops off the rails and slides the remaining distance to the test device. Information about the construction, capabilities, and operation of the FOIL can be found elsewhere [11].

Test devices should be mounted in as realistic a manner as possible. Some objects like foundation mounted luminaire supports may be rigidly connected to a universal foundation if they are normally supported on a rigid foundation in the field. Soil mounted structures like guardrail terminals, utility poles and signs should be mounted in a soil representative of the soil type typically found in the field.

The vehicle should slide laterally at least two vehicle track widths to allow the vehicle to stabilize after dropping off the monorail. The sliding should occur on pavement or wood since soft earth may trip a vehicle sliding broadside over a large distance. Wetting down the approach area with water just prior to the test will help reduce friction between the surface and the vehicle tires. Accidents certainly occur on dry non-paved surfaces but experimental difficulties with the stability of the vehicle and repeatability of the test make reducing the sliding friction advisable.

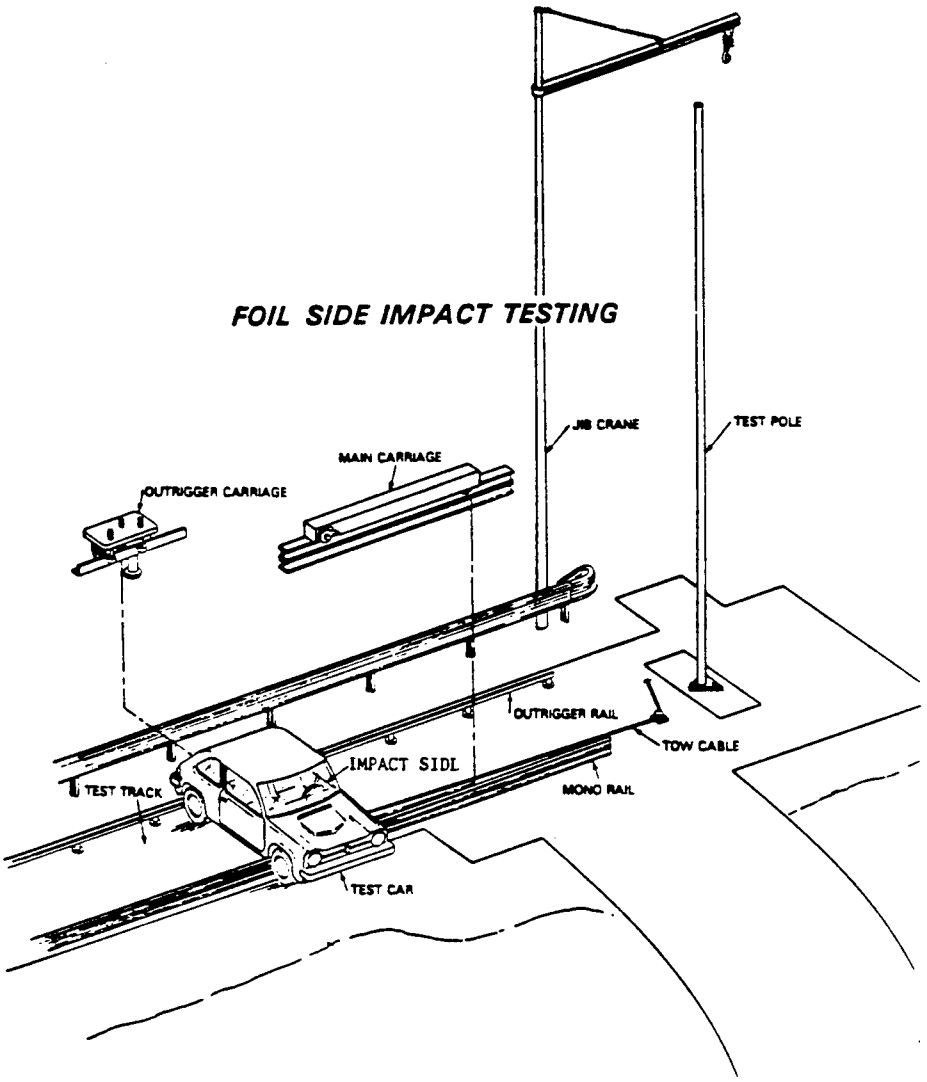

Figure 1. Federal Outdoor Impact Laboratory [11].

2.2 Test Articles

An investigation of the Fatal Accident Reporting System (FARS) and National Accident Sampling System (NASS) showed that narrow objects accounted for 60 percent of the accidents but 80 percent of the fatalities in side impact accidents involving fixed roadside objects. Narrow objects subject the side of a vehicle to highly concentrated loadings that are difficult to resist without extensive vehicle deformation.

Highway safety appurtenances in the narrow-object category (table 1) include luminaire supports, utility poles, sign supports, guardrail terminals and narrow crash cushions. These recommendations should be used during an assessment program after all the applicable frontal tests have been performed. The side impact test is much more demanding than the frontal tests. After successful performance is observed in the frontal tests, the side impact test should be performed.

Table 1. Test devices appropriate for side impact crash testing.

Luminaire Supports
Large and Small Sign Supports
Guardrail Terminals
Narrow Crash Cushions
Breakaway Utility Poles

2.3 Vehicle

A two-door 820-kg small vehicle should be used in side impact crash testing of roadside hardware. This vehicle is identical to the 820C vehicle recommended in the NCHRP guidelines with the exception that only two-door models should be used [29]. All the requirements for mass tolerances, vehicle age and condition recommended in the NCHRP guidelines should also be satisfied for side impact crash tests as should recommended vehicle dimensions.

Examination of the FARS accident data has shown that the fatality rate in smaller vehicles is no different than for larger vehicles in side-impact fixed-object accidents [28]. Partyka has shown that, in general, the fatality rate is not a function of weight in single-vehicle accidents where rollover does not occur [25]. The choice of a lighter test vehicle, therefore, cannot be justified on the grounds that the occupant is more at risk.

Instead, the lighter vehicle was chosen in order to (1) minimize the kinetic energy available for device activation and (2) maximize the probability of vehicle instability during the post collision trajectory. Most of the devices targeted by these recommended procedures function by breaking away, collapsing, yielding or fracturing. The 820C vehicle provides a reasonable minimum amount of kinetic energy in an impact.

While vehicle stability was not normally a problem in side impact crash tests with fixed objects, smaller vehicles tend to be less stable than larger vehicles because of narrower track widths, smaller masses, and the position of their centers of gravity. Stability problems like rolling over are more easily identified when smaller vehicles are used so their use is recommended.

The door on a two-door vehicle spans a larger distance than in comparable four-door models. This larger span on two-door models makes the door inherently weaker than the four-door model. The two-door small car minimizes the side impact resistance of the vehicle.

Side impact crash tests of narrow fixed objects sponsored by the FHWA have been performed using the Honda Civic Si, the Dodge Colt, the Plymouth Champ and the Volkswagen Rabbit [27]. All the vehicles used were two-door models manufactured between 1978 and 1986 and conform to the requirements shown in table 2.

Table 2. Side impact test vehicle.

Vehicle Type	NCHRP 820C	
Test Inertial - kg	820	± 25
Dummy - kg	75	
Max. Ballast - kg	50	
Gross Static - kg	915	± 25
Engine Location	Front	
Drive Axle Location	Front	
Number of Doors	Two	

3 Test Conditions

3.1 General

Side impact tests will be supplementary to the usual frontal crash tests specified in *NCHRP Report 230.* The standard frontal matrix of tests includes a 30 km/h test of the breakaway mechanism. Since this frontal test examines the breakaway mechanism at the 30 kJ level, there should be no need to retest in a side impact configuration. In frontal tests, the amount of kinetic energy transformed to vehicle deformation is usually a relatively small percentage of the total energy; most of the energy can be used to activate the device. In side impacts, vehicle deformation accounts for a much larger proportion of the initial kinetic energy. It cannot be assumed *a priori*, then, that a device that activates in a low speed frontal collision will activate in a side impact collision. While testing at a lower speed would produce a more demanding test in terms of device activation, it may not be satisfactory for evaluating the risk to vehicle occupants. The side impact test

recommended herein will focus on the response of the hypothetical occupant.

Impact conditions for full-scale crash tests have generally been designed to represent the practical worse-case impact scenario [19]. With this perspective in mind, accident data from the Fatal Accident Reporting System (FARS) and the National Accident Sampling System (NASS) Continuous Sampling System (CSS) were investigated to examine the characteristics of side impact fixed object accidents [32] [28] [31].

The following recommended test conditions for side-impact fixed object collisions are a compromise between the most realistic conditions and those easiest to obtain in controlled experiments. The accident data provides indications of the speeds and orientations common in side impact collisions. Because of the shortcomings of accident data the estimates of impact conditions must be viewed as tentative. The accident data does, however, provide the only view of the real-world accident problem. It appears that most side impacts occur at relatively low lateral speeds and high angles.

Table 3 shows the recommended impact conditions for side impact testing of roadside structures. A collision between a fixed roadside object and the center of the driver's side door is recommended. The lateral impact speed for test SI-1should be 50 km/h. Test SI-2 is an optional higher velocity test that can be included when the performance of a device is expected to degrade at higher velocities. While real accidents involve longitudinal and angular velocity components, experimental limitations often preclude testing with these additional velocity components. These impact conditions are suggested as a reasonable set of experimentally achievable test conditions for exploring the performance of roadside hardware in side impact collisions.

Table 3. Side impact test conditions.

	SI-1	SI-2 (optional)
Lateral Velocity	50 km/h	60 km/h
Longitudinal Velocity	0 km/h	0 km/h
Yaw Angle	90 degrees	90 degrees
Yaw Rate	0 degrees/sec	0 degrees/sec
Impact Point	Center of Door	Center of Door

3.2 Vehicle Orientation

Side impacts have been shown to be associated primarily with narrow fixed objects such as utility poles and luminaire supports [28] [31]. The impact angle is usually defined in a crash test as the angle between the longitudinal axis of a device and the approach path of the vehicle. Since many narrow objects have no longitudinal axis the impact angle is technically undefined. The vehicle orientation and yaw angle can be defined instead in

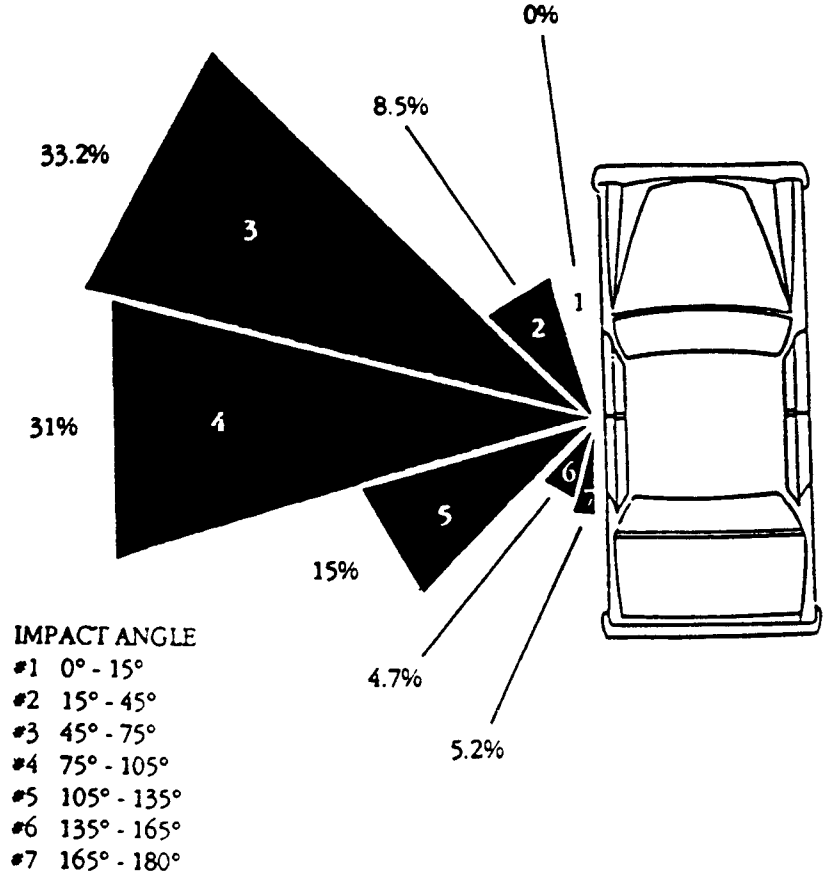

Figure 2. Directions of force in side impact collisions with fixed roadside objects involving the passenger compartment (1982 - 1985 NASS) [32].

terms of the orientation of the traveled way as shown in figure 3. This ensures that the basic accident scenario being investigated is the same even if the devices are different.

There is no direct measure of the yaw angle given in the NASS-CSS accident data. An estimate of these quantities can be made, however, using the direction-of-force variable and the longitudinal and lateral changes in velocity. The yaw angle is the angle between the longitudinal direction of the vehicle and the direction of the velocity vector.

The direction-of-force (DOF) variable is an estimate of the orientation of the resultant force during the collision. A DOF of 0 indicates that the force interaction was parallel with the center line of the vehicle whereas a DOF of 90 would indicate a perpendicular force. Figure 2 shows the direction of force distribution for side impacts with fixed objects from the 1982 through 1985 NASS-CSS data [32]. The mean direction of force was found to be 56 degrees and the median value was 60 degrees. The most frequently observed direction of force was 90 degrees, a full broadside collision. Figure 2 also shows that the vehicle had a forward component of velocity in more than 80 percent of the impacts. Angles between 45 and 105 degrees accounted for almost 50 percent of the side impact yaw impact angles.

Another rough estimate of the yaw angle can be obtained by calculating the arctangent of the longitudinal and lateral change in velocity. These estimates are very approximate because of the uncertainties in calculating the two velocity values [30]. The mean yaw

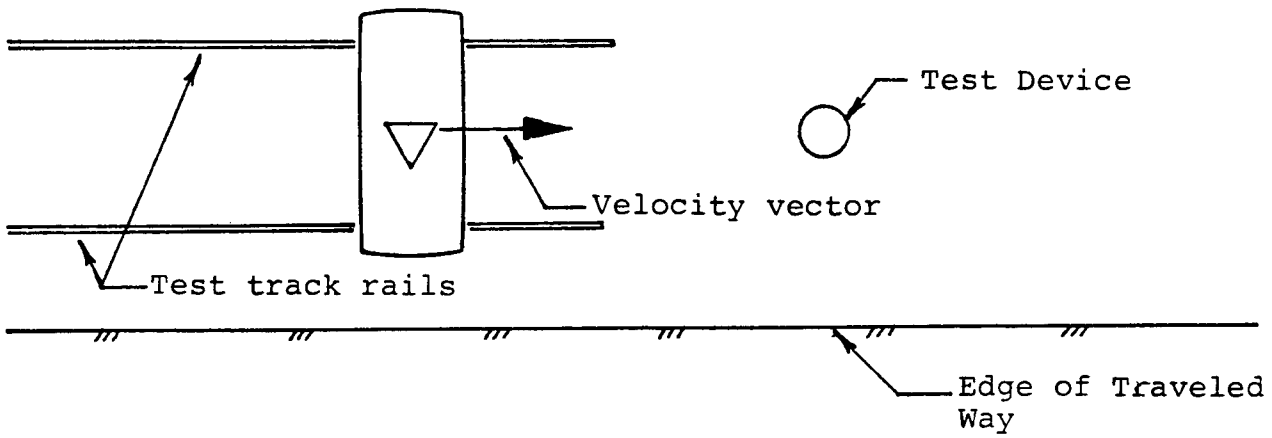

Figure 3. Vehicle orientation for side impact crash tests.

angle was found to be 57 degrees with a standard deviation of 19 degrees [32]. Both estimates of the yaw angle, then, indicate that the mean yaw angle is approximately 60 degrees. The final rule on side impact testing published by NHTSA specifies a test with a crabbed impactor bogie. The principal direction of force on the test vehicle is 63 degrees. This choice of a crabbed vehicle was based on NHTSA's analysis of vehicle-to-vehicle side impact collisions.

Performing tests with a yaw angle of 60 degrees was considered but abandoned in favor of a 90-degree orientation for several reasons:

- Mounting a vehicle on a carriage with a 60 degree yaw angles causes some experimental problems in balancing the vehicle on the guidance rails and mounting the carriages under the vehicle. In NHTSA tests the impacted vehicle is stationary so it does not have to balanced and accelerated. The impactor bogie, though yawed, is a tracking vehicle since the wheel are attached at an angle.
- When a yawed vehicle releases from the carriage it will tend to roll ahead making the vehicle difficult to control. Obtaining repeatable impact locations would be impossible with a yawing vehicle.
- A full broadside orientation constitutes a reasonable worst-case (possible unsurvivable) scenario in terms of the side-door strength of the vehicle. The side of the vehicle is relatively weak and the perpendicular orientation maximizes the loading in the weak direction.

Side impact crash tests of roadside structures should be performed with the vehicle perpendicular to the traveled way with the front of the vehicle facing the traveled way.

This orientation, shown in figure 3, represents the common accident scenario of leaving the road on the wrong side, partially recovering and striking a fixed object nearly broadside.

3.3 Velocity

The velocity change values reported in the 1982 through 1985 NASS-CSS data for side impact fixed objects accidents centered on the occupant compartment were used to estimate the impact velocity [32]. The change in velocity can be assumed to be close to the impact velocity if it is assumed that the vehicle was brought to rest as a result of the collision. The most frequently struck objects in the NASS-CSS data are trees, utility poles and other narrow objects. While some of these objects, like sign supports and delineator posts, do break away or yield the majority of collisions are with objects that do not break away such as trees and utility poles. When the fixed object does not break away, the vehicle must come to rest. The assumption that the changes in lateral velocity can be used to represent lateral impact velocities, then, seems to be a reasonable first approximation for side impacts with fixed roadside structures.

The mean lateral change in velocity, as shown in table 4, was 24 km/h. The maximum lateral velocity observed in this sample was 63 km/h. If the distribution of lateral velocities is assumed to be exponential, 85 percent of the cases would occur at less than 45 km/h and 70 percent of the cases would occur at less than 30 km/h. An exponential distribution is a reasonable assumption since the most common lateral velocity should be zero and large lateral velocities should be quite rare. An exponentially distributed lateral velocity distribution is suggested by the NASS data [27].

Table 4. Change in velocity statistics for side impact accidents with fixed objects (1982-1985 NASS) [32].

Velocity Direction	**Maximum Velocity** (km/h)	**Mean Velocity** (km/h)	**Standard Deviation** (km/h)
Lateral	63	24	16
Longitudinal	38	11	10
Total	67	29	18

Table 5 illustrates the increasing severity of injury with increasing total velocity change. More than 60 percent of all minor injuries occurred in accidents where the lateral change in velocity was less than 10 km/h. In contrast 75 percent of the severe and fatal injuries occurred in accidents where the lateral change in velocity was greater than 31 km/h. Clearly, the amount of energy dissipated is related to the severity of injury experienced by the vehicle occupants. It has been suggested that injury can be defined as exposure to energy [4]; more energy should be correlated with a higher proportion of severe injuries. The proportion of severe and moderately injured occupants increases as the lateral change in velocity increases.

Table 5. Injury as a function of lateral change in velocity for side impacts centered on the passenger compartment [32].

ΔV_{total}	Minor $0 \leq AIS < 2$		Moderate $2 \leq AIS < 3$		Severe $AIS > 4$		Unknown	Total	
(km/h)	(no.)	(%)	(no.)	(%)	(no.)	(%)	(no.)	(no.)	(%)
0-10	34	65	7	33	2	25	2	44	54
11-20	4	8	1	5	0	0	0	5	6
21-30	9	17	0	0	0	0	0	9	11
31-40	2	4	6	29	1	12	0	9	11
41-50	3	6	1	5	1	13	0	5	6
51-60	0	0	5	23	3	38	0	8	10
60>	0	0	1	5	1	12	0	2	2
Total	52	100	21	100	8	100	2	83	100
Missing								23	

Severe injuries *(AIS* > 3) can be observed across the range of impact speeds but 75 percent occur at velocities greater than 30 km/h. The mean velocity for occupants who received *AIS* > 3 injuries was approximately 40 km/h. Impacts occurring in the 30 to 60 km/h range resulted in 1 chance in 18 of sustaining an *AIS* > 3 injury. A test velocity of 50 km/h was selected since successful performance at this speed would imply protection for nearly 90 percent of the vehicle occupants in this sample. Specifying a higher test velocity would probably exceed the point of diminishing returns.

3.4 Impact Point

The impact point for side impact crash tests of roadside structures should be at the center of the driver's side door on a small 2-door passenger vehicle. This location is near the longitudinal center of gravity of the 820C vehicle and about 250 mm in front of the dummy shoulder. The door is weakest at the center so the maximum amount of intrusion should be observed when the impact is located at this point.

One of the CRASH3 data items collected in the NASS data is the distance from the vehicle center of gravity to the centroid of the damaged area. Nearly 60 percent of the side impacts in the study sample occurred between the A and B pillar [32]. Impacts that occur between the A and B pillars will be located on the front door, very close to the front seat occupant.

Earlier tests [12] have used an impact point centered on the front seat occupant. While this orientation represents a practical worst case scenario, recent testing has indicated that obtaining useful anthropometric dummy responses is very difficult when the dummy directly contacts the intruding object [27]. Accidents where the occupant's head directly contacted an intruding pole are not difficult to find in the literature or in the accident data.

When this occurs the occupant is nearly always severely injured, even when the lateral impact velocity is very low. The absence of any protection between the head and the window makes protection of the occupant in this situation nearly impossible.

The recommended impact location is slightly in front of the dummy shoulder. This location, while not the worst, subjects the dummy to large impact loadings but is far enough removed to yield more repeatable and meaningful dummy responses.

3.5 Anthropometric Dummy Position

NHTSA vehicle-to-vehicle side impact tests require the use of an instrumented Part 572 Subpart F side impact dummy (SID) [24]. The side impact tests performed at the FOIL since 1985 have all used this type of dummy. The long-term objective of this research is to specify criteria that will allow side impact crash tests to be evaluated without dummies. There are several reasons for not including dummies in crash tests of safety appurtenances. A recent FHWA staff studies found that in most typical appurtenance crash tests, the data obtained from the anthropometric dummy was rarely used and the responses were often subcritical [17].

The use of dummies in the early stages of side impact research, however, is inescapable. Judging the performance of a test article ultimately involves judging the risk of serious injury to vehicle occupants in real accidents. The anthropometric dummy is the best available device that, at least in principal, links the performance of the device on the test pad to the performance in the real world. Instrumented side impact dummies should, therefore, be used in the side impact crash tests of roadside objects for the foreseeable future.

The Part 572 dummy is recommended primarily because all previous side impact crash tests of roadside structures have used this device, and it is unlikely that newer side impact anthropometric devices like the EuroSID or BioSID will be made available to roadside appurtenance researchers in the near future.

The seat should be positioned as far to the rear as the normal seat adjustment will allow in order to fit both the anthropometric test device and the displacement transducer in the occupant compartment (see section 4.3). The displacement transducer includes a string that stretches from the impact-side door to the non-impact-side door. If the dummy is not position far enough back the string could interfere with the dummy response.

The dummy was placed in the driver's position in all the side impact tests performed at the Federal Outdoor Impact Laboratory. The dummy should be placed in the front seat position on the impact side on the vehicle. Although many injuries in real accidents result from an unrestrained non-impact-side occupant flailing across the passenger compartment, the impact-side occupant is always at greater risk of injury.

Table 6. Anthropometric side impact test dummy.

Type	Part 572 Subpart F (SID)
Seating Position	Impact Side (Driver-side preferable)
Seat Adjustment	Maximum rearward position
Seat Back Position	Normal upright position
Restraint	Available restraints

The seat back should be positioned in the "normal," unadjusted position. This is usually the most vertical orientation. Some recent research has suggested that ensuring the head is relatively level is an important factor in obtaining repeatable HIC values in side impacts [24]. While explicit leveling of the head is not necessary, the upright position of the seat back will result in a more level head form.

Traditionally, restraints have not been used in full-scale crash tests of safety hardware. Seat belts are not effective in side impacts when the impact is on the same side as the occupant. The lap belt restrains the pelvis but not the upper body, allowing the head and thorax to contact the side structure of the vehicle. Seat belts do, however, help keep the dummy in-position as the vehicle is being transported down the test track. Prior research has indicated that all occupant response measures are extremely sensitive to the position of the dummy at impact. The seat belts help keep the dummy from bouncing out of position during the acceleration and sliding phases prior to impact. All available restraints should be used in side-impact fixed object crash tests.

4 Data Acquisition

4.1 General

Side impact crash tests require the same types of vehicle data as more traditional full-scale crash tests [29]. The vehicle should be instrumented with accelerometers to measure all six degrees of freedom of the vehicle. Photographic coverage should conform to the usual practice in appurtenance tests. Film analysis of the vehicle motions should be performed as well as analyses of the vehicle accelerometer outputs. An on-board high-speed camera is useful for understanding the response of the vehicle occupants and possible sources of injury and is essential for determining the pre-impact position of the dummy.

Relating observable results of crash tests and the risk of severe injury in such collisions is the long-term goal of side impact crash testing. Table 7 shows the data elements that should be calculated, collected, recorded and reported in side impact crash tests. To date there are relatively few side impact crash tests available for analysis. These data elements

Table 7. Data elements required in side impact crash tests.

Parameter	Symbol	Acquisition Device
Impact Velocity	V_i	Film
Actual Dummy Impact Velocity	V_{occ}	Calculations
Maximum static vehicle crush (exterior)	c_e	NHTSA 6-point sketch
Area of crush (exterior)	C_{area}	NHTSA 6-point sketch
Maximum dynamic intrusion (interior)	c_i	Displacement Transducer
Average intrusion rate (interior)	$\dot{c}_i$	Displacement Transducer
Maximum 10-msec vehicle acceleration prior to dummy contact with interior.	a_{pc}	Vehicle accelerometers
Maximum 10-msec vehicle acceleration during dummy contact with interior.	a_{dc}	Vehicle accelerometers
Maximum 10-msec vehicle acceleration after dummy contact with interior.	a_{rd}	Vehicle accelerometers
Thoracic Trauma Index	TTI	Anthropometric Dummy
Head Injury Criteria	HIC	Anthropometric Dummy
Maximum pelvis acceleration	a_p	Anthropometric Dummy
Longitudinal distance from the center of the dummy head to impact point	r	Onboard Film
Lateral distance from the left side of the dummy head to edge of passenger compartment	s	Onboard Film
Distance from impact point to front axle	D	Post Test Measurement

are thought to be important characteristics of the collision that might be useful in building models that predict the risk of severe occupant injury. Collecting these data will allow a data base of important side impact parameters to be assembled. Table 7 also shows the data acquisition device needed to obtained each parameter. Most involve typical acquisition methods like vehicle accelerometers and film analysis. In addition to the usual data acquisition methods, a fully instrumented anthropometric dummy and a displacement transducer to measure the deformation of the door should be used.

4.2 Anthropometric Dummy

While anthropometric dummies were routinely used in the past in full-scale safety appurtenance crash tests, they did not provide much useful information [17]. The forces in most longitudinal barrier tests are well below the level necessary to result in significant dummy responses. In recent years anthropometric dummies have been included in most crash tests only to represent the occupant's inertia and to enhance the on-board photographic record.

The severity of the crash loading in side impacts, however, places the dummy in a much more extreme environment and meaningful dummy responses can be obtained. An instrumented SID should be used in side impact crash tests with roadside structures.

The dummy should be instrumented so that the Thoracic Trauma Index (TTI), the Head Injury Criteria (HIC) and the maximum pelvis accelerations (a_p) can be calculated. Calculation of the TTI requires accelerometers located on the impact-side ribs and T12 segment of the spine. The HIC is calculated based on the resultant of a triaxial accelerometer mounted in the head form of the Part 572 dummy [24].

4.3 Displacement Transducer

The intrusion of the door into the passenger compartment is one of the most hazardous characteristics of side impact accidents. The occupant strikes the intruding door structure in a typical side impact event. Penetration of the passenger compartment has long been recognized as a very hazardous event in roadside collisions. Any significant penetration or deformation of the passenger compartment is disallowed in all other types of full-scale appurtenance crash tests. The severity of side impact collisions, however, makes this an unreasonable and unobtainable restriction. In order to determine the effect of the intrusion and more particularly the intrusion rate, the use of a displacement transducer is recommended.

A Celesco PT510 string pot transducer has been used successfully in several side impact crash tests of guardrail terminals [27]. This device can accurately record distances between 0 and 2 m. Devices of this type are readily available, inexpensive and very robust. Figure 4 shows how the transducer was mounted in several recent tests. The transducer unit was attached to the inner window sill of the non-impact side door. The end of the string was stretched across the passenger compartment and screwed into the structure of the impact-side door. The string should be perpendicular to the door. The transducer measures the instantaneous width of the passenger compartment and the slope of this line represents the velocity of the inner surface of the intruding door. Figure 5 shows the output of a string pot transducer in a side impact test of a guardrail terminal.

5 Evaluation Criteria

5.1 General

Using standard testing conditions ensures that different tests performed by different testing agencies can be compared directly. Standardizing test conditions does not indicate how well a device performs; evaluation criteria do. Evaluation criteria are a set of quantifiable

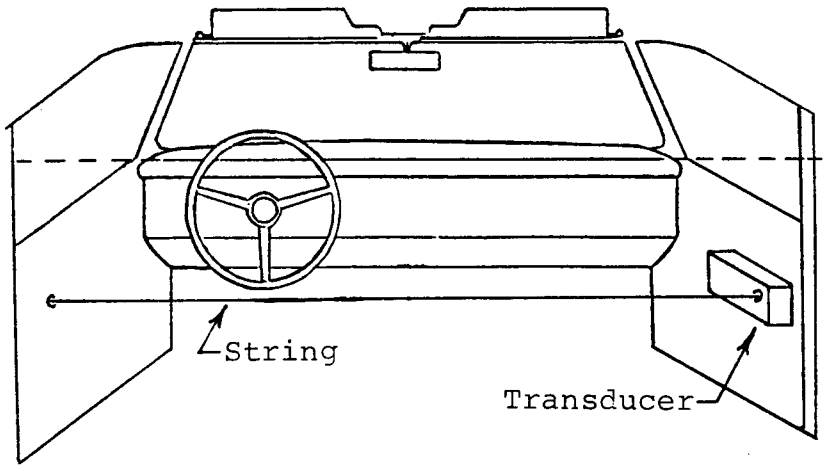

Figure 4. Displacement transducer.

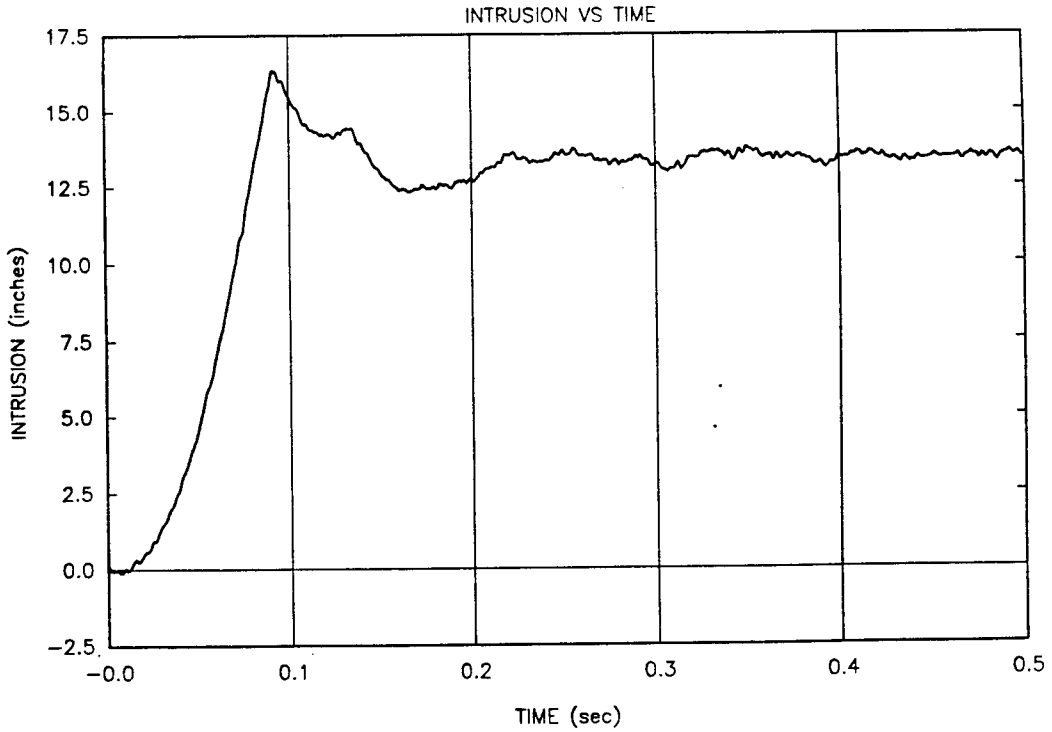

1 in = 25.4 mm

Figure 5. Example displacement transducer output.

limits that, taken together, suggest how well a roadside structure can be expected to perform in real-world impacts.

The NCHRP guidelines recommend three separate criteria for evaluating crash tests: structural adequacy, occupant risk, and vehicle trajectory. These three criteria have evolved over the years to ensure that hardware performs as designed (structural adequacy criteria), it does so without undue risk to vehicle occupants (occupant risk criteria), and the probability of subsequent accident events is minimized (vehicle trajectory). Although past criteria have not addressed side impacts specifically, the three general criteria are as applicable to the side impact scenario as other, more typical accident scenarios. The three general NCHRP evaluation criteria are used as a framework for developing side impact crash test evaluation procedures.

5.2 Structural Adequacy Criteria

The structural adequacy criteria requires that a roadside structure be structurally capable of accomplishing its primary purpose. For longitudinal barriers, this primary structural purpose is preventing the vehicle from crossing the barrier line; for breakaway hardware the primary purpose is to yield or breakaway without penetrating the passenger compartment or scattering debris onto the roadway.

In side impacts, roadside structures should be expected to breakaway, fracture, collapse or yield allowing the vehicle to either pass by or stop. The suggested structural adequacy criteria for side impacts are shown in table 8. Italicized text represents an addition to NCHRP criterion B

5.3 Occupant Risk Criteria

The occupant risk criteria have evolved into the most important single evaluation criteria in testing roadside hardware. The ultimate objective of all safety hardware is to prevent or minimize the potential for injury to occupants of vehicles that leave the traveled way. Unfortunately, establishing a linkage between parameters measured in crash tests and real occupants of vehicles in accidents has been an extraordinarily difficult task.

Report 230 introduced the concept of the flail space occupant risk criteria. The flail space method calculates the hypothetical impact velocity of an occupant head with the interior of the vehicle. The impact velocity between the occupant and the vehicle interior did not prove to be a good predictor of dummy response even when the flail space method was modified to account for the intrusion rate of the door.

Relating the forces experienced by anthropometric test devices to the potential for

Table 8. Side impact crash test evaluation criteria.

Structural Adequacy	NCHRP-B.	The test article should readily activate in a predictable manner by *collapsing*, breaking away, fracturing or yielding.
Occupant Risk	NCHRP-F	The vehicle should remain upright during and after the collision although moderate roll, pitching and yawing are acceptable.
	SI-H	The Head Injury Criteria (HIC) measured using a side impact dummy (part 572 subpart F) should be less than 1000. If the dummy was not in the normal seating position at the time of impact, the HIC may be normalized using the following expression: $HIC_{norm} = HIC_{obs}\ 0.9925^r\ 0.9883^s$ where $r =$ Longitudinal distance from dummy shoulder to impact point (mm). $s =$ Lateral distance from the left side of the dummy head to door window (mm).
	SI-T	The Thoracic Trauma Index (TTI) measured using a side impact dummy (part 572 subpart F) should be less than 90. If the dummy was not in the normal seating position at the time of impact, the TTI may be normalized using the following expression: $TTI_{norm} = TTI_{obs}\ 0.9960^r\ 0.9975^s$ where $r =$ Longitudinal distance from dummy shoulder to impact point (mm). $s =$ Lateral distance from the left side of the dummy head to door window (mm).
	SI-P	The pelvic acceleration measured using a side impact dummy must be less than 130 g's.
Vehicle Trajectory	SI-V.	After collision the vehicle trajectory should not intrude into adjacent traffic lanes.

serious injury is a challenging area of research that has been pursued by NHTSA, the military and the automotive design communities for decades. The measures of injury promoted by NHTSA are recommended since that agency has the most expertise and ability in the area of biomechanics and human tolerance. Conforming to the NHTSA recommendations will allow the roadside safety community to take advantage of a wealth of biomechanics experience while also facilitating the exchange of information between these two agencies in the future. While the HIC and TTI could certainly be improved, they have a better linkage to real human trauma than the flail space for side impacts.

The recommended occupant risk criteria, discussed below, is composed of four subcriterion: a vehicle stability criterion, a thoracic trauma criterion, a head injury criterion and a pelvis acceleration criterion.

5.3.1 Vehicle Stability Criterion

Roll over of the vehicle has long been recognized has a very hazardous event in single vehicle accidents [25]. Roadside structures should breakaway, collapse or yield in an impact without causing the vehicle to rollover or completely loose contact with the ground.

5.3.2 Head Injury Criterion

The Head Injury Criteria (HIC) evolved from several earlier techniques for measuring the resultant accelerations experienced by the head form of the Part 572 dummy [18]. The HIC has been used for many years in frontal barrier crash tests by NHTSA as well as by the roadside design community. A HIC of 1000 has generally been considered the threshold for severe injury.

The purpose of any occupant response measure is to estimate the risk to occupants in real accidents. A cumulative probability density function relating the probability of sustaining an $AIS > 3$ injury based on the observed HIC has been developed from the results of cadaver testing [26]. According to this curve, a $HIC = 1000$ implies a risk of $AIS > 3$ injury of 0.18: 18 percent of occupants with a $HIC = 1000$ will be severely injured.

Unfortunately, the HIC was not developed to measure head injury potential in side impacts. The differences between longitudinal and lateral head impact tolerance and the degree to which the Part 572 head form predicts human injury have been debated but no consensus has been reached [18]. It is widely agreed, however, that the head is probably *less* tolerant in lateral impacts than in frontal impacts so the HIC should certainly be no greater than 1000. There is a great need for the biomechanics research community to address the issue of an appropriate lateral HIC limit or, more generally, head injury criteria

for the side of the head. A $HIC = 1000$ has been used in a recent study of head form impacts with upper vehicle-interior structures like the A-pillar, roof rails and B-pillar [6]. A limit of 1000 appears to be the best available link between the dynamics of an impacting head and the potential for serious injury.

Anthropometric dummies should be used in side impact crash tests of roadside structures as long as the possibility of serious damage to the dummy is minimal. The HIC should be evaluated in the same manner typically used for frontal collisions. Details on computationally efficient HIC algorithms can be found in a variety of papers in the literature [18] [3] [13].

The exact location of the dummy at the time of impact has been a problem in performing side impact crash tests of roadside structures. Dummies in vehicle-to-vehicle crash tests do not move prior to the impact because the struck vehicle is stationary so correct dummy position can be guaranteed. In roadside structure crash tests the vehicle and dummy must be accelerated to the desired impact velocity since the structure is fixed and the vehicle is accelerated. Ideally, the dummy should be in the "normal" seating position. This would correspond to a location about 250 mm behind the impact point and 165 mm from the head to the side window.

When the dummy is not in the correct position at impact, the HIC can be normalized using the following expression:

$$HIC_{norm} = HIC_{obs}\ 0.9925^{r}\ 0.9883^{s} \tag{1}$$

where
$r =$ Longitudinal distance from dummy shoulder to impact point in mm.
$s =$ Lateral distance from dummy shoulder to impact point in mm.

This expression was derived from a regression analysis of 15 side impact crash tests of poles. The HIC appears to decay exponentially as the distance between the head and the impact point increases. The worst-case impact location is one that is centered on the occupant's head when the occupant is in contact with the door window ($r = 0$, $s = 0$). Figure 6 shows the definition of the coordinates for equation 1.

It is very important to normalize the HIC when different tests are being compared since a large HIC may be due to the head impact being too close to the intruding object rather than a difference in performance between one device and another.

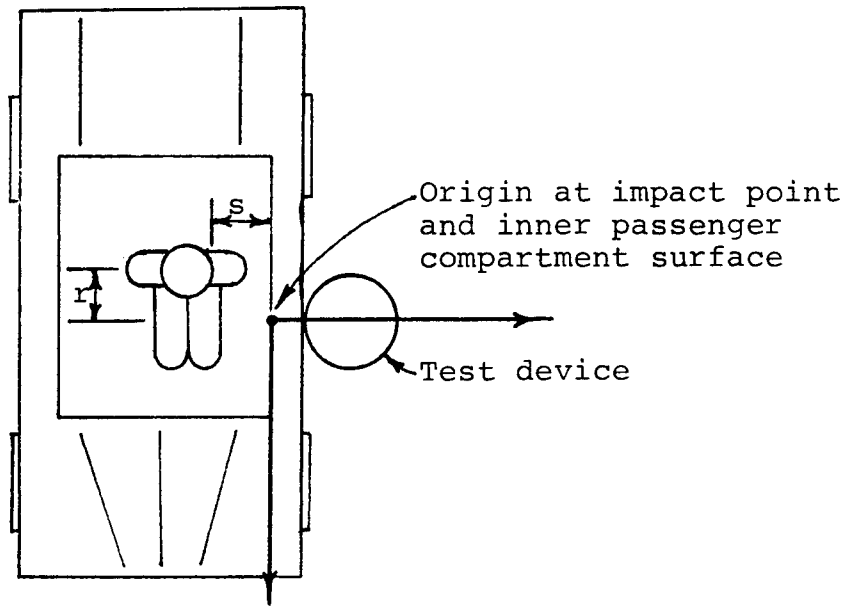

Figure 6. Coordinates for occupant position in side impact crash tests.

5.3.3 Thoracic Trauma Criterion

The thoracic trauma index (TTI) was developed by NHTSA to measure the chance of severely injuring the human thorax during a collision [20] [5] [8] [7]. The formulation of TTI has gone through several revisions, the most recent being found in the 1990 final amendment for Federal Motor Vehicle Safety Standard 214 [24]. The TTI is the average acceleration experienced by accelerometers located on the left upper rib (LURY) and the twelfth spinal segment (T12P) as shown in equation 2. The accelerations should be filtered using the FIR100 finite impulse response filter as specified in FMVSS No. 214 [24].

$$TTI = \frac{G_R + G_{LS}}{2} \tag{2}$$

where
G_R = The greater peak acceleration of either the upper or lower rib in g's, and
G_{LR} = The peak acceleration of the lower spine (T12) [24].

The TTI is not the only possible measure of thoracic trauma. Researchers at General Motors Research Laboratory, for example, developed a competing injury scale, the viscous criteria (VC) [34] [15]. Unfortunately, the data required to calculate VC are only obtainable using BioSID dummies which were not available in any of the side impact crash tests performed to date at the FOIL. In contrast, the TTI can be calculated using the more common Part 572 SID. Since most of the FHWA tests and all of the NHTSA tests contained data that could be used to calculate the TTI, the TTI was preferred as a measure of thoracic occupant trauma.

Instrumented anthropometric dummies should be used in side impact crash tests of roadside structures. The TTI for the in-position dummy should be less than 90 g's. NHTSA, in its 1990 final rules on side impact, requires the TTI be less than 90 g's in tests of 2-door passenger cars. The recommended criteria therefore conform to the NHTSA design limits. The TTI has been related to the probability of various levels of injury using the Abbreviated Injury Score (AIS) [1]. The cumulative density function of TTI was found to be a Weibull extreme value distribution [20]. A $TTI = 90$ corresponds to a 0.16 probability of an $AIS > 3$ injury. This level of risk is roughly the same used for the HIC so these criteria represent an internally consistent risk of trauma for evaluating side impact tests.

Maintaining correct dummy position, as discussed earlier, is often very difficult in a crash test where the vehicle and dummy must be accelerated up to a target test speed. If the dummy is out of position (i.e. $r \neq 250$ mm and $s \neq 165$ mm) the TTI should be normalized to the hypothetical in-position response using equation 3. The coordinate system for occupant motions is shown in figure 6. This expression is based on the empirical observation that the TTI, like HIC, seems to decay exponentially as the distance from the occupant increases.

$$TTI_{norm} = TTI_{obs}\ 0.9960^{r}\ 0.9975^{s} \tag{3}$$

where
$r =$ Longitudinal distance from dummy shoulder to impact point in mm.
$s =$ Lateral distance from dummy shoulder to impact point in mm.

5.3.4 Pelvis Acceleration Criterion

Although no side impact crash tests of roadside hardware have collected the pelvic acceleration, it is a component of the NHTSA final rules on FMVSS-214 [24]. The pelvis accelerations should be filtered using the FIR100 finite impulse response filter as specified in FMVSS No. 214. This rule specifies that the pelvic must not experience an acceleration greater than 130 g's during the test.

$$a_p \leq 130 \tag{4}$$

Where a_p is the maximum acceleration of the pelvis of the side impact dummy. The probability of experiencing a fatal fracture is relatively low at this level. Including the pelvis acceleration also helps to ensure that improvements in the TTI and HIC do not come at the expense of shifting the load path through lower parts of the vehicle.

5.4 Vehicle Trajectory Criterion

The purpose of the vehicle trajectory criteria is to reduce the chance of a subsequent harmful event after the appurtenance collision. Since the vehicle is sliding sideways in a side impact it will usually loose speed rapidly and come to rest near the first impact point. Sometimes, after the collision, the laterally sliding tires may begin to rotate causing the vehicle to roll forward. Since the front of the vehicle is pointing toward the traveled way in the standard orientation (figure 3) there is a danger that the vehicle can reenter the roadway or even travel completely across it. Reentry of the vehicle into the roadway, especially at the high angles resulting from a side impact, is not acceptable.

Criteria SI-V, shown in table 8, is very similar to NCHRP evaluation criteria K [29] except more restrictive language is used. This slightly more stringent criteria is recommended because, after a side impact, a vehicle could reenter the roadway at a high angle, perhaps even perpendicular to the roadway. After the vehicle comes to rest it will probably require towing since vehicle damage is usually extensive in a side impact.

6 Estimating Dummy Responses

6.1 General

Ultimately anthropometric dummies should be eliminated from full scale tests. The environment in many full scale crash tests of roadside safety appurtenances is so severe it is often not advisable to place dummies in the vehicle. Good dummy results require careful and frequent calibration which has traditionally been a problem for roadside safety applications. Since the response of the vehicle can be easily measured in a full-scale test, vehicle-based evaluation parameters that estimate the response of hypothetical humans are preferable to the use of fully instrumented anthropometric dummies.

As discussed earlier, there are three primary injury mechanisms that are active in side impact collisions: thoracic trauma, head injury and pelvic fracture. Data from 15 previous crash tests were analyized to determine if there were any relationships between the observed vehicle-based parameters and the vales of TTI and HIC. Pelvic acceleration was not modeled since there has been no data collected as yet. The same type of modeling activity could be performed to estimate the accelerations of the pelvis based on vehicle-based parameters once sufficient data has been collected. The 15 tests used represent all the tests that used instrumented SID dummies. The following sections summarize the findings of these investigations [27].

6.2 Thoracic Trauma Index

A multiple linear regression analysis was performed on 15 tests of small cars side impacting a variety of poles. Values for all the parameters listed in table 7 were collected and entered into a data base of values. A variety of regression models were evaluated. Models that included the effect of occupant position (parameters r and s) and impact velocity were required. Beyond these three basic parameters the model with the fewest predictors and highest R^2 were preferred. The best five parameter model was:

$$TTI = 0.5(10)^{-3}\left\{0.9960^{r}0.9975^{s}\right\} V_i^{2.5}\left\{\frac{c_i^{1.25}}{\sqrt{\dot{c}_i}}\right\} \tag{5}$$

$R^2 = 0.90$

where r = Longitudinal distance from occupant head to impact point in mm.
s = Lateral distance from occupant head to the impact point in mm.
V_i = Vehicle impact velocity in m/sec.
c_i = Maximum static passenger compartment crush in mm.
$\dot{c}_i$ = Average passenger compartment intrusion rate in m/sec.

The coefficient of regression squared (R^2) for this model was quite good for this type of experimental data. The components of this model seem reasonable: severity should increase as the occupant gets closer to the impact point (r and s) and severity should be a function of the impact velocity (V_i) since this is a measure of the total amount of kinetic energy at the start of the impact event. Passenger compartment crush and crush rate were also thought to be directly related to the TTI since thoracic injuries are caused by contact with the side door panels.

In a test with no dummy, three of these parameters (r, s, and V_i) are specified. Only crush and crush rate are measurable results of the test. The desirable, in-position location of an occupant is at $r = 250$ mm, $s = 165$ mm and the standard impact speed is 50 km/h (14 m/sec). The maximum allowable TTI from table 8 is 90 g's. These values can be substituted into equation 5 and solved for the quantity $\left\{\frac{c_i^{1.25}}{\sqrt{\dot{c}_i}}\right\}$. Doing so results in a criterion for allowable thoracic trauma.

$$1000 \geq \frac{c_i^{1.25}}{\sqrt{\dot{c}_i}} \tag{6}$$

If the crush and crush rate result in a value less than 1000, the probability of observing a TTI greater than 90 is relatively small.

This expression was developed using the results of 15 side impact tests of slip-base and ESV poles. The degree to which this expression will predict TTI scores for other types of devices is not known. The range of crush and crush rate in these tests was between 200 and 900 mm and 1 and 10 m/sec, respectively. These expressions might not yield

appropriate estimates for tests where the crush or crush rate was substantially more than the tested range. These expressions should be used as a guide when direct measures of the TTI are not available.

6.3 Head Injury Criteria

The same type of stepwise regression analysis was performed to find models for the HIC. The results of this analysis were not as attractive as the TTI model described in the previous section. It is presented here to serve as an approximate guide for tests where no dummies were included.

Most of the 15 tests were conducted with the dummy head aligned with the impacting pole. This caused exceptionally high HIC values since there was often direct contact between the pole and the head. This extreme test condition may be more demanding than the SID dummy capabilities. For this reason, a longitudinal impact point (r) of 250 mm is recommended for future tests. The severity of the loading caused problems in developing a model for HIC. The $r = 0$ position appears to represent a singularity in the response of the dummy. Future research with dummies at positions other than $r = 0$ should help to refine the model presented herein. Equation 7 represents the model with the best R^2 value which included terms for occupant position (r and s).

$$HIC = 280\,\{0.9925^r\ 0.9883^s\}\left\{\frac{c_i^{1.64}}{\dot{c}\ V_{occ}{}^{0.15}}\right\} \tag{7}$$

$R^2 = 0.56$

where r = Longitudinal distance from occupant head to impact point in mm.

s = Lateral distance from occupant head to the impact point in mm.

V_{occ} = Occupant impact velocity with intruding vehicle interior in m/sec.

c_i = Maximum static passenger compartment crush in mm.

$\dot{c}_i$ = Average passenger compartment intrusion rate in m/sec.

When there is no dummy in the test vehicle, the above expression can be solved for limiting values of the quantity $\left\{\frac{c^{1.64}}{\dot{c}\ V_{occ}{}^{0.15}}\right\}$. Substituting $HIC = 1000$, $r = 250$, and $s = 165$, yields a value of 165. An approximate criteria that would predict acceptable HIC values could be stated as:

$$165 \geq \left\{\frac{c^{1.64}}{\dot{c}\ V_{occ}{}^{0.15}}\right\} \tag{8}$$

As with the TTI model described above, this model may not be appropriate for devices that are not breakaway poles and for impacts outside the range of typical values used in building the regression models. Equation 7 is presented as a guide for tests where it is not possible to use a dummy in the test vehicle. This model, due to the underlying data, should only be used in tests where there is a possibility of direct contact between the head

and the intruding object. In tests of guardrail terminals, for example, there is no possible contact between the head and the terminal so the HIC should not be evaluated. The HIC should always be evaluated for tall, narrow objects like luminaires, utility poles and signs.

7 References

[1] AAAM, *The abbreviated injury scale* (AIS-80), tech. rep., American Association for Automotive Medicine, Morton Grove, IL, 1980.

[2] C. E. BUTH, G. R. SAMUELSON, AND R. M. OLSON, *Crash tests and evaluation of highway apurtenances,* Tech. Rep. FHWA-RD-79-092, Federal Highway Administration, September 1979.

[3] C. C. CHOU, R. J. HOWELL, AND B. Y. CHANG, A *review and evaluation of various* HIC *algorithms,* SAE Technical Paper Series, (1988).

[4] N. R. C. COMMITTEE ON TRAUMA RESEARCH, *Injury In America: A Continuing Public Health Problem,* National Academy Press, Washington, D.C., 1985.

[5] R. A. EPPINGER, J. H. MARCUS, AND R. M. MORGAN, *Development of dummy and injury index for NHTSA's thoracic side impact protection research program,* SAE Technical Paper Series, (1984).

[6] H. C. GABLER AND D. T. WILKE, *Upper interior head impacts: The safety performance of passenger vehicles,* in Thirteenth International Technical Conference on Experimental Safety Vehicles, no. 91-59-0-07, National Highway Traffic Safety Administration, November 1991.

[7] J. R. HACKNEY, M. W. MONK, W. T. HOLLOWELL, L. K. SULLIVAN, AND D. T. WILKE, *Results of the national highway safety administration's thoracic side impact protection research program,* SAE Technical Paper Series, (1984).

[8] R. L. HESS, K. WEBER, AND J. W. MELVIN, *Review of literature and regulation relating to thoracic impact tolerance and injury criteria,* Tech. Rep. UM-HSRI-81-38, Motor Vehicle Manufacturing Association, Detroit, MI, 1981.

[9] H. J. HIGNETT, *A sideway impact test into a 12.2 m (40 ft) lighting column fitted with a break-away joint,* Tech. Rep. RRL Report LR 241, Road Research Laboratory, Ministry of Transport, Crowthorne, Berkshire, UK, 1969.

[10] J. A. HINCH, J. A. HANSEN, M. W. HARGRAVE, AND D. R. STOUT, *Full-scale side impact testing,* Tech. Rep. FHWA-RD-89-157, Federal Highway Administration, Washington, D.C., February 1989.

[11] J. A. HINCH, G. MANHARD, D. STOUT, AND R. OWINGS, *Laboratory procedures to determine the breakaway behavior of luminaire supports in mini-sized vehicle collisions,* Tech. Rep. FHWA/RD-86/106, Federal Highway Administration, August 1987.

[12] J. A. HINCH AND D. STOUT, *Tests 1785-SI#1-87 through 1785-SI#8-88,* Federal Highway Administration, Washington, D.C., 1988.

[13] G. L. HOLSTEIN AND N. M. ALEM, *Fast algorithm for computing* HIC.

[14] J. F. C. III AND M. H. RAY, *Side impact crash testing of highway safety hardware,* in Highway Safety on Two Continents, Vag-och Traffik Institutet, 1991.

[15] I. V. LAU AND D. C. VIANO, *How and when blunt injury occurs - implications to frontal and side impact,* SAE Technical Paper Series, (1988).

[16] K. K. MAK AND R. L. MASON, *Accident analysis - breakaway and nonbreakaway poles including sign and light standards along highways,* tech. rep., National Highway Traffic Safety Administration, Washington, D.C., August 1980.

[17] L. MECZKOWSKI, *Evaluation of test dummies for use in* FHWA *crash tests,* FHWA staff report, Federal Highway Administration, Washington, D.C., January 1987.

[18] J. W. MELVIN AND K. WEBER, *Review of Biomechanical Impact Response and Injury in the Automotive Environment,* no. DOT HS 807 042, National Highway Traffic Safety Administration, Washington, D.C., 1985.

[19] J. D. MICHIE, *Recommended procedures for the safety performance evaluation of highway appurtenances,* Tech. Rep. 230, National Cooperative Highway Research Program, 1981.

[20] R. M. MORGAN, J. H. MARCUS, AND R. H. EPPINGER, *Side Impact - The Biofidelity of NHTSA's Proposed ATD and Efficacy of TTI,* no. P-189, Society of Automotive Engineers, October 1986.

[21] NHTSA, *Federal motor vehicle safety standards: Side impact protection,* Federal Register, 53 (1988), PP. 2239-2260.

[22] *Federal motor vehicle safety standards: Side impact protection - light trucks, vans, and multipurpose passenger vehicles,* Federal Register, 53 (1988), PP.31716-31720.

[23] *Federal motor vehicle safety standards: Side impact protection - passenger cars,* Federal Register, 53 (1988), PP. 31712-31716.

[24] *Federal motor vehicle safety standards: Side impact protection,* Federal Register, 55 (1990),PP.45722-45780.

[25] S. C. PARTYKA AND W. A. BOEHLY, *Registration Based Fatality Rates by Car Size from 1978 through 1987,* no. DOT HS 80744, National Information Technical Service, Springfield, VA, 1989.

[26] P. PRASAD AND H. MERTZ, *The position of the United States delegation to the ISO working group 6 on the use of* HIC *in the automotive environment,* SAE Technical Paper Series, (1985).

[27] M. H. RAY, J. F. C. III, M. FARAMAWI, AND L. A. TROXEL, *Side impact crash testing,* Tech. Rep. draft, Federal Highway Administration, Washington, D.C., 1992.

[28] M. H. RAY, L. A. TROXEL, AND J. F. C. III, *Characteristics of side impact accidents involving fixed roadside objects,* Journal of Transportation Engineering, 117 (1991).

[29] H. E. ROSS, D. L. SICKING, H. S. PERERA, AND J. D. MICHIE, *Update of* RECOMMENDED PROCEDURES FOR THE SAFETY PERFORMANCE EVALUATION OF HIGHWAY APPURTENANCES, tech. rep., National Cooperative Highway Research Program, July 1991. (Second Draft).

[30] R. A. SMITH AND J. T. NOGA, *Accuracy and sensitivity of crash, SAE* Technical Paper Series, (1982).

[31] L. TROXEL, M. H. RAY, AND J. F. C. III, *Side impact collisions with roadside obstacles,* Transportation Research Record, (1991).

[32] L. A. TROXEL, M. H. RAY, AND J. F. C. III, *Accident data analysis of side-impact, fixed-object collisions,* Tech. Rep. FHWA-RD-91-122, Federal Highway Administration, Washington, D.C., 1991.

[33] T. TURBELL, *Eftergivliga belysningsstolpar: Utveckling av en provningsmetod och forslag till krav,* Tech. Rep. 204, Staten Vag-och Trafikinstitut (VTI), Linkoping, Sweden, 1980.

[34] D. C. VIANO, *Biomechanics of injury in lateral impacts,* Accident Analysis and Prevention, 21 (1989).

HSR-20/5-93(250)EW