U.S. Department of
Homeland Security

United States
Coast Guard

FINANCIAL RESOURCE MANAGEMENT MANUAL (FRMM)

COMDTINST M7100.3C

This page intentionally left blank.

U.S. Department of Homeland Security
United States Coast Guard

Commandant
United States Coast Guard

2100 Second Street, S.W.
Washington, DC 20593-0001
Staff Symbol: CG-8
Phone: (202) 267-0651
Fax: (202) 267-4385

COMDTNOTE 7100
16 MAR 06

COMMANDANT NOTICE 7100 CANCELLED: 15 MAR 07

Sub: CH-2 TO FINANCIAL RESOURCE MANAGEMENT MANUAL (FRMM), COMDTINST M7100.3C

Ref: (a) Financial Resource Management Manual (FRMM), COMDTINST M7100.3C

1. PURPOSE. This Notice promulgates Change 2 to reference (a) and provides comprehensive guidance to accumulate Construction In Progress (CIP) costs for new PP&E capital asset projects (both real and personal property).

2. ACTION. Area and district commanders, commanders of maintenance and logistics commands, commanding officers of headquarters units, assistant commandants for directorates, Judge Advocate General, and special staff offices at Headquarters shall ensure compliance with the provisions of this Notice. Internet release authorized.

3. DIRECTIVE AFFECTED. None.

4. ENVIRONMENTAL ASPECT AND IMPACT CONSIDERATIONS. Environmental considerations were examined in the development of this Notice and have been determined to be not applicable.

5. SUMMARY OF CHANGES. All expenditures incurred for new construction projects shall be classified into two major categories: DIRECT and INDIRECT costs. These costs shall be properly recorded in the CG Core Accounting System (CAS). The new policy will be published as Chapter 9 in CH-2 of the FRMM. Any replication in FRMM Section 7.A that may be found in Chapter 9 will be addressed in the next revision of the Financial Resource Management Manual, COMDTINST M7100.3D, which is due to be published in May 2006. The PP&E policy is effective for all new AC&I capital asset projects initiated on or after October 1, 2005.

DISTRIBUTION–SDL No. 144

	a	b	c	d	e	f	g	h	i	j	k	l	m	n	o	p	q	r	s	t	u	v	w	x	y	z
A	1	1	1	1	1	1	1																			
B	1	1	1	1	1	1	1	1	1	1	1	1	1	1	1	1	1	1	1	1	1	1	1	1	1	
C	1	1	1	1	1	1				1				1										1		
D		1		1	1	1													1							
E																										
F					1																					
G			1																							
H																										

NON-STANDARD DISTRIBUTION:

6. PROCEDURES. Remove and insert the following pages:

Remove	Insert
None	Chapter 9 CH-2

7. FORMS/REPORTS. None.

R. S. HOROWITZ /s/
Chief Financial Officer

Encl: CH-2 Financial Resource Management Manual (FRMM), COMDTINST M7100.3C

U.S. Department of Homeland Security
United States Coast Guard

Commandant
United States Coast Guard

2100 Second Street, S.W.
Washington, DC 20593-0001
Staff Symbol: CG-8
Phone: (202) 267-0651
Fax: (202) 267-4385

COMDTNOTE 7100
OCT 6, 2004

COMMANDANT NOTICE 7100 CANCELLED: OCT 5, 2005

Sub: CH-1 TO FINANCIAL RESOURCE MANAGEMENT MANUAL (FRMM), COMDTINST M7100.3C

Ref: (a) Financial Resource Management Manual (FRMM), COMDTINST M7100.3C

1. PURPOSE. This Notice promulgates Change 1 to reference (a), highlights significant changes to accounting and financial policy regarding field, OM&S, repairable spares, and the supply fund.

2. ACTION. Area and district commanders, commanders of maintenance and logistics commands, commanding officers of headquarters units, assistant commandants for directorates, Judge Advocate General, and special staff offices at Headquarters shall ensure compliance with the provisions of this Notice. Internet release authorized.

3. DIRECTIVE AFFECTED. None.

4. SUMMARY OF CHANGES. This notice details corrections to the accounting and reporting of repairable spares, includes WAGBs and WLBs as units subject to financial reporting on CG's financial statements, and lowers the Supply Fund capital available for procurement to 10% of the overall inventory investment.

5. PROCEDURES. Remove and insert the following pages.

Remove	Insert
2-39 to 2-40	2-39 to 2-40
7-23 to 7-24	7-23 to 7-24
7-27 to 7-28	7-27 to 7-28
7-33 to 7-34	7-33 to 7-34

/S/
R. S. HOROWITZ
Chief Financial Officer

Encl: CH-1 Financial Resource Management Manual (FRMM), COMDTINST M7100.3C

DISTRIBUTION – SDL No. 141

	a	b	c	d	e	f	g	h	i	j	k	l	m	n	o	p	q	r	s	t	u	v	w	x	y	z
A	1	1	1	1	1	1	1		1	1			1	1	1	1										
B																										
C																1										
D																										
E																										
F																										
G			1	1	1																					
H																										

NON-STANDARD DISTRIBUTION:

This page intentionally left blank

U.S. Department of Homeland Security
United States Coast Guard

Commandant
United States Coast Guard

2100 Second Street, S.W.
Washington, DC 20593-0001
Staff Symbol: CG-8
Phone: (202) 267-6681
Fax: (202) 267-4385

COMDTINST M7100.3C
AUG. 6, 2004

COMMANDANT INSTRUCTION M7100.3C

Subj: FINANCIAL RESOURCE MANAGEMENT MANUAL (FRMM)

1. PURPOSE. This Manual provides Coast Guard policy for all financial resource management matters and related issues.

2. ACTION. Area and district commanders, commanders maintenance and logistics commands, commanding officers of headquarters units, assistant commandants for directorates, Judge Advocate General, and special staff offices at Headquarters shall ensure compliance with the provisions of this Manual.

3. DIRECTIVES AFFECTED. The Financial Resource Management Manual (FRMM), COMDTINST M7100.3B is hereby cancelled.

4. DISCUSSION. Significant changes have been made to the FRMM, including format, addition of new financial policies, changes to budget formulation, execution and funds authority, an update of Coast Guard office symbols and commonly used acronyms, and the addition of a glossary. Changes to each of the eight chapters and glossary were carefully reviewed and examined by special advisory groups involving various Directorates over a one year period, and then extensively reviewed during two separate concurrent clearance reviews at Headquarters.

5. REQUESTS FOR CHANGES. Units and individuals may recommend changes by writing via the chain of command to Commandant (CG-843), U.S. Coast Guard, 2100 2nd Street S.W., Washington, DC 20593-0001.

6. ENVIRONMENTAL ASPECT AND IMPACT CONSIDERATIONS. Environmental considerations were examined in the development of this Manual and have been determined to be not applicable.

6. FORMS/REPORTS. None

/S/
R. S. HOROWITZ
Chief Financial Officer

DISTRIBUTION – SDL No.

	a	b	c	d	e	f	g	h	i	j	k	l	m	n	o	p	q	r	s	t	u	v	w	x	y	z
A	1	1	1	1	1	1	1		1	1			1	1	1	1										
B																										
C																1										
D																										
E																										
F																										
G			1	1	1																					
H																										

NON-STANDARD DISTRIBUTION:

This page intentionally left blank.

FINANCIAL RESOURCE MANAGEMENT MANUAL

Table of Contents

Chapter 1. Introduction to Financial Resource Management
1.A Purpose and Scope of Manual 1-1
1.B Financial Resource Management 1-1
1.C Budgeting Definition 1-1
1.C.1 The Budget Process 1-1

Chapter 2. Coast Guard Funding Authority and Structure
2.A Federal Agency Authority to Spend Funds 2-1
2.B Coast Guard Funding 2-1
2.B.1 Regular Appropriations 2-1
2.B.2 Supplemental Appropriations 2-5
2.B.3 Continuing Resolutions 2-5
2.B.4 Operating with No Appropriations 2-5
2.B.5 Revolving Funds 2-5
2.B.6 Gift Fund 2-6
2.B.7 Revolving Trust Funds 2-6
2.B.8 Sales, Fees, Fines, and Other Collections 2-7
2.B.9 Reimbursable 2-7
2.B.10 Imprest Funds 2-7
2.B.11 Non-Appropriated Funds 2-8
2.B.12 Cash and Property Recovered or Seized 2-8
2.C Sub appropriation Account Structure -Purpose of Sub appropriation Accounts 2-8
2.C.1 Sub account Categories -Definitions/ Apportionment 2-8
2.D OE Appropriation Allotment Fund Control Codes (AFC) 2-10
2.D.1 AFC-01 Military Pay 2-10
2.D.2 AFC-08 Civilian Pay 2-10
2.D.3 AFC-20 Permanent Change of Station 2-10
2.D.4 AFC-30 Operating and Maintenance 2-10
2.D.5 AFC-38 Industrial Support Activity Revolving Fund 2-11
2.D.6 AFC-40 Chief of Staff Administrative 2-11
2.D.7 AFC-41 Aeronautical Engineering 2-11
2.D.8 AFC-42 Command, Control, Communications and Electronics 2-11
2.D.9 AFC-43 Civil Engineering 2-11
2.D.10 AFC-45 Naval Engineering 2-11
2.D.11 AFC-56 Training 2-11
2.D.12 AFC-57 Medical 2-11
2.D.13 AFC-75 Reimbursable/Refund Program 2-11
2.D.14 AFC-77 Reimbursable Execution Accounts 2-12
2.D.15 AFC-80 Reimbursements 2-12

FINANCIAL RESOURCE MANAGEMENT MANUAL

Table of Contents

Chapter 2. Coast Guard Funding Authority and Structure
2.D.16 AFC-88 Reimbursements for Special Purpose 2-12
2.D.17 AFC-80, AFC-88 Reimbursable CERCLA Reimbursable Account 2-12
2.E AFC-90, AFC-94 Reserve Training Allotment Fund Control Codes 2-15
2.E.1 AFC-97 Reserve Refund Program 2-16
2.E.2 AFC-98 Reserve Civilian Pay 2-16
2.F Coast Guard Supply Fund 2-16
2.F.1 References 2-17
2.F.2 Responsibilities Office of Financial Policy and Systems (CG-84) 2-18
2.F.3 Internal Controls and Asset Management Division (CG-842) 2-18
2.F.4 Office of Military Personnel (G-WPM) 2-18
2.F.5 Office of Worklife (G-WKW) 2-19
2.F.6 Finance Center (FINCEN) 2-19
2.F.7 Activities or Units with S/A 81 and 83 accounts 2-19
2.F.8 Designation of Supply Fund Activities/Units and Authorized Sales Methods – Wholesale Inventory Activities 2-20
2.F.9 Designation of Activities 2-21
2.F.10 Requests to Establish or Close a Supply Fund Activity 2-23
2.F.11 Capital Authorization 2-25
2.F.12 Financial Management 2-26
2.F.13 Supply Fund Capital Available For Procurement 2-27
2.F.14 Pricing of Supply Fund Inventory 2-27
2.F.15 Standard Price Record File 2-28
2.F.16 Stocking Criteria For Wholesale Inventory Activities 2-31
2.F.17 Stocking Criteria For Retail Inventory Activities 2-31
2.F.18 Stocking Criteria For Wholesale Clothing Activities 2-32
2.F.19 Stocking Criteria For Retail Clothing Activities 2-32
2.F.20 Stocking Criteria For Dining Activities 2-32
2.F.21 Stocking Criteria For Fuel Activities 2-32
2.F.22 Stock Record 2-33
2.F.23 Annual Inventory Listing 2-33
2.F.24 Physical Inventories 2-33
2.F.25 Reports of Survey 2-33
2.F.26 Cash Sales 2-34
2.F.27 Personal Checks and Money Orders Sales 2-34
2.F.28 Change Making Fund 2-34
2.F.29 Cash, Check and Money Order Safeguards 2-34
2.F.30 Organizational Clothing Sales 2-35
2.F.31 Government Furnished Material 2-35

FINANCIAL RESOURCE MANAGEMENT MANUAL

Table of Contents

Chapter 2. Coast Guard Funding Authority and Structure
2.F.32 Returned Items 2-35
2.F.33 Excess, Obsolete and Unserviceable (EOU) Inventory 2-36
2.F.34 Reporting 2-37
2.F.35 Capital Position Report 2-39
2.F.36 Capital Available For Procurement 2-40
2.F.37 Unfilled Customer Orders 2-41
2.F.38 Supply Fund Inventory Report 2-41
2.G AC&I Project Identification System 2-43
2.G.1 AFC-72 Retired Pay 2-43
2.G.2 AFC-73 Retired Medical 2-43
2.H Transfers 2-43
2.H.1 Refunds 2-44
2.H.2 Reimbursements 2-44
Encl 2-1 AFC-01 Military Pay/CG-83 2-45
Encl 2-2 AFC-08 Civilian Pay /CG-83 2-47
Encl 2-3 AFC-20 Permanent Change of Station (PCS) 2-49
Encl 2-4 AFC-30 Operating and Maintenance/ CG-83 2-50
Encl 2-4.1 AFC-30 ”T” Training 2-59
Encl 2-4.2 AFC-30 “C” Compliance 2-60
Encl 2-5 AFC-38 Industrial Support Activity Revolving Fund/ G- SLP 2-62
Encl 2-6 AFC-40 Chief of Staff Administrative/ CG-83 2-63
Encl 2-7 AFC-41 Aeronautical Engineering/G-SEA 2-64
Encl 2-8 AFC-42 Command, Control, Communications and Electronics/CG-64 2-67
Encl 2-9 AFC-43 Civil Engineering/ G-SEC 2-71
Encl 2-9.1 Real Property Facility 2-75
Encl 2-10 AFC-45 Naval Engineering/ G-SEN 2-76
Encl 2-10.1 G-SEN Oversight 2-78
Encl 2-11 AFC-56 Training/ G-WTT 2-79
Encl 2-12 AFC-57 Medical/ G-WRP 2-81
Encl 2-13 AFC -72 Retired Pay/G-WPM 2-83
Encl 2-14 AFC -73 Retired Medical/G-WKH 2-84
Encl 2-15 AFC-75 Reimbursements/Fund Programs 2-85
Encl 2-16 AFC-77, AFC-80, AFC-88 Reimbursable 2-86
Encl 2-17 AFC-90, AFC-94, AFC-97, AFC-98 2-88

FINANCIAL RESOURCE MANAGEMENT MANUAL

Table of Contents

Chapter 3. Responsibility for Control of Funds
3.A Good Stewardship 3-1
3.B Authority for Control of Funds 3-1
3.B.1 Budget Authority 3-1
3.B.2 Funds Control 3-1
3.B.3 Delegation of Commandant's Authority 3-3
3.C Headquarters Staff 3-3
3.C.1 Chief of Staff (G-CCS) 3-3
3.C.2 Director of Finance and Procurement (CG-8) 3-3
3.C.3 Director of Resources (CG-8) 3-4
3.C.4 Appropriation Managers 3-4
3.C.5 Headquarters Operating and Support Managers 3-6
3.C.6 Allotment Fund Control Code 3-6
3.C.7 Project Target Officers 3-8
3.C.8 Supply Fund Management Officer 3-9
3.C.9 Gift Fund Manager 3-9
3.C.10 Deposits and General Account Receipts 3-9
3.C.11 The Investment Board 3-10
3.D Administrative Target Unit Officers 3-10
3.D.1 Program Element Manager 3-11
3.D.2 Budget Review Boards 3-13
3.E Area and Maintenance and Logistics Commands -Area Commanders 3-13
3.E.1 Chief Area Resource Division Staff 3-13
3.E.2 MLC Commander 3-15
3.E.3 MLC Comptroller Staff 3-15
3.E.4 Area and MLC Staff Responsibilities 3-15
3.F District Commands - District Commander 3-16
3.F.1 Chief of Staff 3-16
3.F.2 District Budget Staff 3-16
3.G Headquarters Unit - Commanding Officers 3-17
3.G.1 Executive Officers 3-17
3.G.2 Headquarters Unit Financial Management Staff 3-17
3.H Field Unit - Commanding Officer 3-17
3.H.1 Executive Officer 3-17
3.H.2 Unit Financial Managers 3-18
3.I Accounting Activities - Overview 3-18
3.I.1 Finance Center 3-18

FINANCIAL RESOURCE MANAGEMENT MANUAL

Table of Contents

Chapter 4. Budget Forumulation
4.A The Stages and Format of the Budget - Budget Cycle....4-1
4.A.1 Budget Format....4-2
4.A.2 Congressional Stage....4-2
4.A.3 OPSTAGE Budget....4-3
4.B Public Disclosure....4-3
4.B.1 Release or Withholding of Information....4-3
4.B.2 Question on Public Disclosure....4-3
4.C DHS and OMB Stage Budgets -Relation to Forecast Stage....4-3
4.C.1 Budget Preparation Guidelines....4-3
4.C.2 Receipt of Allowances and Appeal....4-4
4.C.3 Relation to DHS Stage....4-4
4.D Congressional Stage Budget - President's Budget....4-4
4.D.1 Preparation and Submission....4-4
4.D.2 Funding, Military Strength and Student Load Authorization....4-5
4.D.3 Selected Reserve Strength....4-5
4.D.4 Congressional Committee Review....4-5
4.E Operating Stage -Overview....4-7
4.E.1 OPSTAGE Financial Plans....4-7
4.E.2 OPSTAGE....4-8
4.E.3 Other Appropriation Financial Plans....4-10
4.F ATU Budget Procedures - General....4-10
4.F.1 Schedule of Submission/Annual Headquarters Guidance....4-10
4.F.2 Preparation of Estimates/ATU Estimates....4-12
4.G RT Appropriation Financial Plans -Schedule for Submission....4-15
4.G.1 General Guidance....4-15
4.G.2 Preparation of Estimates - ISC/MLC Requests....4-15
4.G.3 Appeals....4-16
4.H Standard Personnel Costs (SPC) - Discussion....4-16
4.H.1 SPC Categories....4-16
4.H.2 Personnel Salary Costs....4-17
4.H.3 Distribution....4-17
4.H.4 Estimates....4-18
4.I Function of the Coast Guard Research and Development (R&D) Program....4-19
4.J Research, Development, Testing and Evaluation (RDT&E) Appropriation....4-19
4.J.1 Exploit Emerging Technologies....4-19
4.J.2 R&D Investment Portfolio Process....4-20
4.J.3 New Product Gating Process (NPG)....4-20
4.J.4 R&D New Procedures for Selecting and Requesting Projects....4-21

FINANCIAL RESOURCE MANAGEMENT MANUAL

Table of Contents

Chapter 5. Budget Execution
5.A Continuing Resolution - General 5-1
5.A.1 Funding Levels 5-1
5.A.2 Additional Guidance 5-1
5.A.3 Government Shutdown 5-1
5.B Apportionment Process 5-1
5.B.1 Apportionment Time Periods 5-2
5.B.2 Apportionment Supporting Financial Plans 5-2
5.B.3 Reapportionment 5-2
5.B.4 Deficiency Apportionments 5-3
5.B.5 Deferrals 5-3
5.B.6 Rescissions 5-3
5.C Appropriations - General Rules 5-4
5.C.1 Appropriations Applications 5-4
5.C.2 Expense 5-4
5.C.3 Appropriations and Obligations 5-4
5.C.4 Specific vs. General Appropriations 5-4
5.C.5 Two Appropriations for Same Purpose 5-5
5.C.6 Time and the "Bona Fide Needs" Rule 5-5
5.C.7 Congressionally Directed Projects 5-5
5.C.8 Execution Proposal Procedures 5-5
5.D Statutory and Administrative Ceilings - Ceilings in the Authorization Process 5-6
5.D.1 Civilian Employment Ceilings 5-6
5.D.2 Cash Outlay Ceilings 5-7
5.D.3 Other Ceilings in Appropriation Language - Passenger Vehicles 5-7
5.D.4 Ceilings in DOD Appropriation Language - Dependent Schooling Overseas 5-8
5.D.5 Federal Debt Ceiling Restrictions 5-8
5.D.6 Travel and Other Ceilings 5-8
5.E Key Terminology 5-8
5.E.1 Administrative Commitments 5-9
5.E.2 Legal Obligations 5-9
5.F Anti-Deficiency Act Violations - Over Obligation of Funds Prohibited 5-9
5.F.1 Exceeding Target Reporting 5-11
5.F.2 Anti-Deficiency Violations Reporting 5-12
5.G Reports - Reports of Budget Execution 5-12
5.G.1 Program Element Status 5-12
5.G.2 Other Reports 5-12
5.H Control Of Year End Spending 5-13

FINANCIAL RESOURCE MANAGEMENT MANUAL

Table of Contents

Chapter 5. Budget Execution
5.I Reimbursable and Refund Programs - Purpose 5-13
5.I.1 Reimbursable Agreements - Policies 5-14
5.I.2 Preparation and Coordination of Agreements 5-17
5.I.3 Reimbursement to the OE Appropriation 5-17
5.I.4 Reimbursements to Other Appropriations 5-20
5.I.5 Financing and Billing Arrangements 5-21
5.I.6 Distribution of Agreements 5-23
5.I.7 Revisions and Amendments 5-23
5.I.8 Refund Program - Policies 5-23
5.I.9 Refund Program Procedures/Military Pay and Allowances 5-24
5.J Operating Expenses - Military and Civilian Pay/General 5-25
5.J.1 Upgrade of Civilian Positions 5-25
5.J.2 Overtime for Civilian Employees - Classified Employees- OE 5-25
5.J.3 Non-Pay Cost Of Living (COL) Funding 5-26
5.J.4 Adjustments to Initial Funding -Purpose 5-27
5.J.5 Financial Plan Adjustment Authority 5-28
5.J.6 Adjustments Between a Target 5-28
5.J.7 ATU Funding Adjustments/New Initiatives or Requirements 5-28
5.J.8 Adjustments Between ATUs 5-29
5.J.9 Target Modification 5-30
5.J.10 Additional Funds Requirements 5-30
5.J.11 Permanently Switching Funds 5-31
5.J.12 Transfer of Units Between Districts 5-32
5.J.13 Reporting Excess Funds in OE 5-32
5.J.14 Carryover Criteria/Execution of the Financial Plan 5-32
5.J.15 Report of Un-obligated Balances 5-34
5.J.16 Operating Expense Closeout 5-34
5.J.17 Review Status of AFC Accounts 5-35
5.K Use of OE Funds 5-35
5.K.1 Awards and Recognition 5-36
5.K.2 Bottled Water 5-42
5.K.3 Business Cards or Information Cards 5-42
5.K.4 Cable/Satellite TV Service 5-43
5.K.5 Change of Command Expenses 5-44
5.K.6 Chaplain Support 5-44

FINANCIAL RESOURCE MANAGEMENT MANUAL

Table of Contents

Chapter 5. Budget Execution
5.K.7 Coffee Mess, Picnic Supplies and Equipment 5-45
5.K.8 Conference Planning 5-45
5.K.9 Emergency Evacuation Funds 5-46
5.K.10 Flowers 5-47
5.K.11 Food -Refreshments 5-48
5.K.12 Federal Executive Board 5-52
5.K.13 Gifts 5-52
5.K.14 Insurance 5-52
5.K.15 Lease of Real Property 5-53
5.K.16 Luggage 5-53
5.K.17 Mascots 5-54
5.K.18 Membership Fees 5-54
5.K.19 Military Exchange Facilities as Sources of Supply 5-55
5.K.20 Organizational Clothing 5-55
5.K.21 Personal Expenses and Furnishings 5-56
5.K.22 Promotional Items 5-56
5.K.23 Recreational Memberships 5-57
5.K.24 Retirement Issues 5-57
5.K.25 Savings Bonds 5-57
5.K.26 Seasonal Decorations 5-57
5.K.27 Traditional Ceremonies 5-57
5.L Research, Development, Test and Evaluation -OPSTAGE Financial Plans 5-59
5.L.1 Administration of RDT&E Funds 5-59
5.L.2 Authorized Uses of RDT&E Funds 5-59
5.L.3 RDT&E Funding Responsibilities 5-62
5.L.4 Project Targets 5-63
5.L.5 Funding Basis for RDT&E Projects 5-64
5.L.6 Refunds 5-64
5.M Acquisition, Construction, and Improvements (AC&I) -Purpose 5-64
5.M.1 AC&I Appropriation 5-65
5.M.2 AC&I Category 5-65
5.M.3 General AC&I Terms 5-65
5.M.4 AC&I Work Categories 5-66

FINANCIAL RESOURCE MANAGEMENT MANUAL

Table of Contents

Chapter 5. Budget Execution
5.M.5 AC&I vs. OE Funding 5-71
5.M.6 AC&I Financial Plans -OPSTAGE Financial Plan 5-71
5.M.7 ATU Guidance 5-72
5.M.8 Management Reporting Systems for Projects 5-73
5.M.9 CIFP Request -Procedures 5-73
5.M.10 Modification of Project Targets/Field Requests for Funding Adjustments 5-74
5.M.11 Financial Closure of Completed AC&I Projects 5-74
Table 5-1 AC&I/OE Thresholds and Guidelines 5-75
Table 5-2 - UNIFORMAT II (ASTM E-1557-97) and Coast Guard Work Category Matrix 5-76
Table 5-3 Fund Source Decision Tree for Shore Facility/ATON Category 5-79
5.N Reserve Training Appropriation (RT) -General Responsibilities 5-80
5.N.1 Objectives 5-80
5.N.2 RT vs. Other Appropriations Responsibilities 5-81
5.N.3 Active Duty Training Program 5-81
5.N.4 Active Duty Special Work 5-82
5.N.5 Inactive Duty Training 5-82
5.N.6 Voluntary and Involuntary Recalls 5-82
5.N.7 Adjustments in Reserve Funding Levels 5-82
5.N.8 RT-Funded Civilian Positions 5-82
5.N.9 Reports on Reserve Training Funds 5-83
5.N.10 Un-funded RT Requirements Under $1,000 5-83
5.N.11 Audit of Reserve Training Funds 5-83
5.O Environmental Compliance and Restoration (EC&R) 5-84
5.O.1 Uses of EC&R 5-84
5.O.2 Unauthorized Uses of EC&R 5-85
5.O.3 Spills and Environmental Emergencies 5-86
5.O.4 Contamination at AC&I Project Sites 5-87
5.O.5 Other Guidance 5-87
5.P Oil Spill Liability Trust Fund OSLTF - Uses 5-87
5.P.1 National Pollution Fund Center (NPFC) 5-88
5.Q Alteration of Bridges (AB) - Reprogramming Guidelines 5-88
5.R Retired Pay (RP) 5-88
5.S Industrial Bases - Responsibilities 5-88
5.S.1 Industrial Budget Operating Plan 5-89
5.T Reprogramming 5-90
5.U Supply Fund 5-94

FINANCIAL RESOURCE MANAGEMENT MANUAL

Table of Contents

Chapter 5. Budget Execution
5.U.1 Capital Authorization 5-95
5.U.2 Fund Management 5-95
5.U.3 Surcharge Rates 5-95
5.V Special Deposits, Funds, and Receipts 5-95
5.W Expired Funds Overview/Annual Funds 5-96
5.W.1 Availability For Obligation 5-96
5.W.2 GAO Guidance 5-96
5.W.3 Anti-Deficiency Act Concerns 5-96
5.W.4 Expired Funds Management Responsibilities and Policies 5-97
5.W.5 Closed Accounts 5-100
5.X Gifts Acceptance 5-100
5.X.1 Gift Acceptance Authority 5-101
5.X.2 Acceptance of Gifts From Foreign Governments 5-101
5.X.3 Acceptance of Gifts from Non-Federal Sources 5-102
5.X.4 Gifts of Foreign Travel 5-102
5.X.5 Management of Gifts of Personal and Real Property 5-102
5.X.6 Management of Gifts of Securities 5-103
5.X.7 Endowments and Trust Funds 5-103
5.X.8 Deed of Gift 5-103
Enclosure (5-1) Summary of Change in Financial Plan Signature Authority 5-104
Enclosure (5-2) Fund Request Formats 5-106

Chapter 6. Continuing Operations Without Appropriations
6.A Situation 6-1
6.B Policy 6-1
6.C Schedule of Activities 6-1
6.D Actions 6-2
6.D.1 Activity by Appropriation 6-2
6.D.2 Activity by Mission 6-4
6.D.3 Activity by Category of Personnel Military 6-7
6.D.4 Activity by Facility 6-9
6.D.5 Shutdown Plan - Prior to Shutdown 6-9

Chapter 7. Accounting Policies and Standards
7.A Financial Policy for Property 7-1
7.A.1 References 7-1
7.A.2 Responsibilities 7-2
7.A.3 Accounting Policy for Real Property 7-10
7.A.4 Accounting Policy for Personal Property 7-18
7.A.5 Asset Systems - Oracle Fixed Assets 7-24
7.A.6 Documentation Requirements 7-26
7.A.7 Accounting Policy For Repairable Spare Parts 7-26
7.B Financial Policy For Capitalized Operating Material and Supplies 7-30

FINANCIAL RESOURCE MANAGEMENT MANUAL

Table of Contents

Chapter 7. Accounting Policies and Standards
7.B.1 References 7-31
7.B.2 Type of Operating Materials and Supplies 7-31
7.B.3 Operating Material and Supplies (OM&S) 7-31
7.B.4 Responsibilities -Office of Financial Policy and Systems, Systems Management Division (CG-841) 7-32
7.B.5 Reporting Operating Materials and Supplies 7-33
7.C Financial Policy For OM&S Materials and Supplies 7-36
7.C.1 References 7-36
7.C.2 Policy - Consumption Method of Accounting 7-36
7.D Financial Policy For Supply and Yard Fund Inventory 7-38
7.D.1 References 7-38
7.D.2 Inventory/Policy 7-38
7.D.3 Inventory Control Points Responsibilities 7-39
7.D.4 Inventory Other than Fuel at ICP's 7-39
7.E Financial Policy for Environmental Liabilities 7-42
7.E.1 References 7-42
7.E.2 Definitions - Cleanup Costs 7-42
7.E.3 Policy 7-43
7.F Financial Policy for Accounts Receivable 7-44
7.F.1 References 7-44
7.F.2 Definitions - Accounts Receivable 7-45
7.F.3 Office of Financial Systems (CG-84) 7-46
7.F.4 Policy –Receivable Recognition 7-48
7.G Accounting For Coast Guard Internal Use Software 7-52
7.G.1 Definitions-Capital Software Project 7-52
7.G.2 Responsibilities - Office of Financial Systems (CG-84) 7-53
7.G.3 Specific Capitalization Guidance 7-58
7.H Financial Policy for Deferred Maintenance 7-60
7.H.1 References 7-61
7.H.2 Deferred Maintenance Reporting Responsibilities 7-61
7.H.3 Methodology for Aviation (AFC-41) Depot Level Deferred Maintenance 7-62
7.H.4 Methodology for Electronics (AFC-42) Depot Level Deferred Maintenance 7-64
7.H.5 Methodology for Shore Facility (AFC-43) Depot Level Deferred Maintenance 7-65
7.H.6 Methodology for Naval (AFC-45) Depot Level Deferred Maintenance 7-66

FINANCIAL RESOURCE MANAGEMENT MANUAL

Table of Contents

Chapter 8. Coast Guard Financial and Mixed Systems
8.A Introduction -Purpose 8-1
8.A.1 Background - External Requirements 8-1
8.B Responsibilities- Assistant Commandant For Planning, Resources, and Procurement (CG-8) 8-2
8.B.1 Office of Financial Policy and Systems (CG-84) 8-2
8.B.2 Chief, Office of Procurement Management (CG-85) 8-4
8.B.3 U. S. Coast Guard Finance Center 8-4
8.B.4 U.S Coast Guard Training Center Petaluma 8-5
8.B.5 U.S Coast Guard Training Center Yorktown 8-6
8.C Responsibilities Assistant Commandant (CG-6)/Chief Information Officer (G-CIO) 8-6
8.C.1 Chief, Office of Computer Systems (CG-63) 8-7
8.C.2 Chief, Office of Information Technology Architecture (CG-6B) 8-7
8.D CFO and CIO Cooperation 8-7
8.E Responsibilities Headquarters, Area, and District Programs 8-8
8.E.1 All Coast Guard Units 8-8
8.F Financial and Mixed Requirements - Mandatory Use 8-9
8.F.1 FPD Authorized For Service-Wide Use 8-9
8.F.2 Inventory of Finance and Procurement Systems 8-10
8.F.3 Data Entry Transmission 8-10
8.F.4 Commercial Of the Shelf-Government Off the Shelf COTS/GOTS 8-11
8.F.5 Standards Products 8-11
8. F.6 New or Changing Requirements for a New System and or Design Modification 8-11
8. F.7 Comparability and Consistency 8-12
8. F.8 Integrated Financial Management Systems 8-12
8.F.9 U. S. Government Standard General Ledger at the Transaction Level 8-13
8.F.10 Federal Accounting Standards 8-13
8.F.11 Financial Reporting 8-13
8.F.12 Budget Reporting 8-13
8. F.13 Functional Requirements 8-13
8.F.14 Computer Security Act Requirements 8-14
8.F.15 Documentation 8-14
8. F.16 Internal Controls 8-14
8. F.17 Training and User Support 8-14
8.F.18 Licenses 8-15

FINANCIAL RESOURCE MANAGEMENT MANUAL

Table of Contents

Chapter 8. Coast Guard Financial and Mixed Systems
8.F.19 Maintenance 8-16
8.F.20 Financial Reporting Requirements 8-16
Encl 8-1 Key Legislation and Regulations 8-18
Encl 8-2 Summary of the RFAM Task Group 8-22

Chapter 9. Plant, Property and Equipment (PP&E)
9.A Capitalization of Real and Personal Property 9-1
9.B References 9-1
9.C Purpose 9-1
9.D Responsibilities 9-1
9.D.1 Asst Comdt for Planning Resources & Procurement (CG-8) 9-2
9.D.2 Office of Resource Management, Budget Execution Division (CG-831) 9-2
9.D.3 Office of Systems Management (CG-841) 9-2
9.D.4 Office of Internal Controls and Asset Management (CG-842) 9-2
9.D.5 Office of Procurement Management (CG-85) 9-3
9.D.6 Finance Center (FINCEN) 9-4
9.D.7 Headquarters Program Offices 9-5
9.D.7.a Headquarters Program Offices – AC&I Acquisition Project Managers 9-5
9.D.8 Coast Guard Remote Accounting Facilities: YARD & ARSC 9-6
9.D.9 MLCs, Districts, FDCCs, CEUs, and Field Units 9-8
9.E Plant, Property and Equipment (PP&E) 9-10
9.F Cost Recognition 9-10
9.G Capitalization Standards – Thresholds 9-11
9.G.1 Capitalization Standards – Thresholds: Cost Matrix 9-13
9.G.2 Capitalization Standards – Thresholds: Notes 9-19
9.G.3 Capitalization Standards – Improvements 9-22
9.H Costing Methodology 9-23
9.H.1 Costing Methodology – Direct Costs 9-23
9.H.2 Costing Methodology – Indirect Costs 9-24
9.H.3 Costing Methodology – Indirect Rates and Estimates 9-25
9.H.4 Costing Methodology – Expense Costs 9-25
9.I Project Establishment 9-26
9.J Project Execution 9-30
9.K Execution Reports 9-30
9.L Execution Reviews 9-30
9.M Receipt of Assets 9-31
9.M.1 Receipt of Assets – Full and Complete 9-31
9.M.2 Receipt of Assets – Less than Full and Complete 9-32
9.M.3 Receipt of Assets – Follow-on Costs 9-32
9.M.4 Receipt of Assets – Documentation 9-33
9.N Capitalization of Assets 9-34
9.N.1 Project Management Data Sheet (PMDS) 9-34
9.N.2. Service Life of Assets 9-35

FINANCIAL RESOURCE MANAGEMENT MANUAL

Table of Contents

Chapter 9. Capitalization of Real and Personal Property
9.N.3 Capital and Operating Leases 9-39
9.O Asset Identification 9-42
9.P AC&I Project Closeout 9-42
9.Q CIP Policy Review and Update 9-44

Glossary A-1

Acronym List B-1

INTRODUCTION TO FINANCIAL RESOURCE MANAGEMENT

1.A Purpose and Scope of Manual

This Manual prescribes Coast Guard financial resource management policy. It sets forth responsibilities, guidelines, timetables, and some procedures for Headquarters staffs, areas, districts, maintenance and logistics commands and Headquarters units involved in financial resource management and administration.

1.B Financial Resource Management

Financial resource management includes the diligent oversight of all actions that affect the use of Coast Guard funds. These efforts include:

1. Obtaining funding to carry out the missions, duties, and responsibilities of the Coast Guard.

2. Exercising good stewardship over the funds provided, by ensuring that they are used for the purposes for which they were meant and in accordance with applicable laws, rules, regulations, and policies.

1.C Budgeting Definition

Budgeting is a planned, disciplined approach to funds management and is a cornerstone of financial resource management. It is the process by which planned operations and objectives are translated into their related financial requirements for purposes of estimating and executing those plans. The budget provides base levels or standards of performance from which to evaluate results. It is a tool that best serves its purpose when it is founded on sound financial and management principles supported by the organization and its people.

1.C.1 The Budget Process

The budget process is a general term used to describe how the Coast Guard obtains funding and the rules it must live by in using the funding provided. The budget process involves two major phases: budget formulation and budget execution.

1.C.1.a Budgeting Formulation Process

The budget formulation process starts with the preparation of estimated Coast Guard funding requirements as an operating administration of the Department of Homeland Security. This involves two stages of the formulation process: the Forecast Stage and the DHS stage. The budget estimates are then incorporated into the Office of Management and Budget (OMB) stage.

1.C.1.a Budgeting Formulation Process (Continued)

The final product of these efforts becomes part of the President's budget, which is submitted to Congress in late January or early February (Congressional stage). The budget estimates reflect the missions, programs, and responsibilities assigned to the Coast Guard and the policies of the President in carrying out these missions. The OMB acts as the President's immediate staff in dealing with executive agencies on matters of budget formulation and following Congressional approval of the budget, on budget execution. These relationships and responsibilities are described in greater detail below.

1.C.1.b The Congressional Budget Process

The Congressional Budget Process is outlined in 2 U.S.C. § 631. The timetable with respect to the Congressional Budget Process for any fiscal year is as follows:

On or Before	Action to be Completed
First Monday in February	President submits budget.
February 15	Congressional Budget Office submits report to Budget Committees
April 1	Committees submit view and estimates to Budget Committees.
April 15	Congress completes action on concurrent resolution on the budget.
May 15	Annual appropriations bills may be considered in the House.
June 10	House Appropriations Committee reports last annual appropriation bill.
June 15	Congress completes action on reconciliation legislation.
June 30	House completes action on annual appropriations bills.
October 1	Fiscal Year begins.

1.C.1.b
The Congressional Budget Process
(Continued)

Although the schedule is designed to provide appropriations prior to the start of the fiscal year (1 October), conflicting perspectives of national goals and economic conditions frequently delay approval beyond that date. In this situation, Congress usually enacts a continuing resolution to provide temporary funding until required appropriations are passed (See chapter 6 of this Manual for additional details).

1.C.1.c
Budget Execution

Budget execution and planning for execution begins some eight months prior to the beginning of the fiscal year, immediately after the President's budget.

This page intentionally left blank.

2.A Federal Agency Authority to Spend Funds

Federal agencies obtain their authority to "spend" federal funds via a statute called an appropriation. Appropriations, as a type of budget authority, permit you to incur obligations and make outlays (payments). Congress usually enacts appropriations in annual **"appropriations acts"** and other laws. An appropriation may make funds available from the general fund, special funds, or trust funds, or it may authorize the spending of offsetting collections, which are credited to expenditure accounts (including revolving funds). By contrast, **"authorization acts"** usually precede appropriation acts, setting a limit by Congress on itself as to what it may later appropriate for a given purpose. Authorization acts generally do not make any funds available to an agency. It is not unusual for Congress to skip this preliminary authorization step.

2.B Coast Guard Funding

Coast Guard funding authority comes from a wide variety of statutes. The most common authorities for funding the Coast Guard's programs and missions are: the annual DHS Appropriation Act, continuing resolutions, several supplemental appropriations, and a number of revolving funds, special funds, and trust funds. In the absence of appropriations, the Coast Guard is authorized by law to spend federal funds to protect life and property, provide for national security, and provide for the orderly suspension of operations until appropriations are enacted. Authority to establish and use non-appropriated funds is also authorized by law. The Coast Guard is also authorized by law to collect monies for: goods and services provided; fines; and fees. Various statutes authorize the Coast Guard to safeguard and seize property including cash in the course of conducting operations.

2.B.1 Regular Appropriations

Operating Expenses (OE) provides for the operation and maintenance of all authorized Coast Guard programs and facilities not otherwise specifically provided for in other appropriations or funds. Unless otherwise directed by Congress in the appropriations language, OE is an annual appropriation not to exceed one year.

2.B.1.a Acquisition, Construction, and Improvements (AC&I)

AC&I provides for the acquisition, construction, rebuilding, and improvement of vessels, aircrafts, shore facilities, aids to navigation (ATON) systems and facilities, and command, control, communication and computer (C^4) systems and related equipment. AC&I funds are normally available for obligation as follows:

1. Acquisition, repair, renovation, or improvement of **vessels**: five fiscal years.

2. Acquisition, repair, renovation, rebuilding and improvement of **shore facilities** and **ATON**: three fiscal years.

3. Acquisition of **new aircrafts** and increases in **aircraft capability**: three fiscal years.

4. Acquisition, construction, replacement or improvement of capital **equipment** not fitting above categories: three fiscal years.

5. Personnel and administrative expenses: one or two fiscal year.

2.B.1.b Research, Development, Test, and Evaluation (RDT&E)

RDT&E provides for all necessary expenses for applied scientific research, development, testing, and evaluation including the maintenance, rehabilitation, lease, and operation of related facilities and equipment. RDT&E funds are available until expended (no-year funds).

2.B.1.c Environmental Compliance and Restoration (EC&R)

EC&R provides for environmental compliance and restoration of contamination from hazardous substances and pollutants at all current and former Coast Guard facilities. It provides for identification, investigation, cleanup, and hard engineering fixes (i.e., physical changes) on Coast Guard buildings or structures to comply with applicable federal, state, and local environmental laws and regulations EC&R funds are normally available until expended (no-year funds).

2.B.1.d
Alteration of Bridges (AB)

AB provides for the government's share of altering or removing railroads and publicly owned bridges that obstruct the navigable waterways in the United States. Alteration of highway bridges is eligible for funding from the Federal-Aid Highway Program. Administrative costs associated with this appropriation are funded under the OE appropriation. AB funds are normally available until expended (no-year funds).

2.B.1.e
Reserve Training (RT)

RT provides for all the necessary expenses for the operation and administration of the Coast Guard Reserve Program. RT is an annual appropriation not to exceed one year.

2.B.1.f
Retired Pay (RP)

RP provides for the pay of former military members of the Coast Guard, the Coast Guard Reserve, and members of the former Lighthouse Service. It also funds survivor annuity payments under the Retired Serviceman's Family Protection Plan and the Survivor Benefit Plan, and medical benefits for retirees and their dependents. RP is an annual appropriation not to exceed one year.

2.B.1.g
Oil Spill Liability Trust Fund (OSLTF)

The OSLTF was authorized by the Oil Pollution Act (OPA) of 1990 (33 USC 2701 et.seq.) Title I of the Act included authorization language governing uses of the OSLTF. Title 6 includes special provisions for Permanent Definite and Permanent Indefinite Appropriations for specific purposes, as well as a requirement for all other OSLTF funds to be subject to annual appropriations.

2.B.1.g.(1)
Funding

The Omnibus Budget Reconciliation Act of 1989, Public Law 101-239, provided for a five cent tax on each barrel of oil entering U.S. ports to be deposited into the OSLTF to be used to finance oil pollution prevention and cleanup responsibilities by various federal agencies. This tax authority expired December 31, 1994 and has not been reinstated.

2.B.1.g.(2) Spending

There are three expenditure appropriations from the OSLTF.

- Trust Fund Share of Expenses - An annual appropriation to the Coast Guard.
- Oil Spill Restoration (Emergency Fund/SZ). A Permanent Definite (no year) appropriation of $50 million a year for immediate response to oil spills as determined by Coast Guard and Environmental Protection Agency (EPA) Federal On Scene Coordinators in accordance with the National Contingency Plan (40 CFR 300).
- Oil Spill Claims (Claims Fund/SX). A Permanent Indefinite Warrant Authority extended to the Coast Guard to pay all valid claims for costs and damages authorized by OPA to injured parties resulting from oil spills in accordance with the provisions of the Act.

2.B.1.g.(3) Receipts

Two categories of receipts are deposited back into the OSLTF.

- Cost recovery actions resulting from OSLTF removal actions or claims paid.
- Civil and criminal fines and penalties for violations of the Clean Water Act. Fines and penalties may be from either the Coast Guard or the EPA, since both agencies have enforcement authority under the Clean Water Act and OPA.

2.B.1.h Boat Safety Account (BS)

BS account provides funding for the development and implementation of a coordinated national recreational boating safety program. Current provisions of the law provide for the transfer of highway trust fund revenue derived from the motorboat fuel tax, and certain other taxes, to the Aquatic Resources Trust Fund. In turn, Congress authorizes appropriations from this fund to meet expenditures for Coast Guard and state recreational boating safety assistance and other programs specified by law. BS account funds are available until expended (no-year end funds).

2.B.2 Supplemental Appropriations

Supplemental appropriations are legislatively funded adjustments to the Coast Guard budget authority provided outside the normal annual budgeting process to address funding needs that are often emergent in nature. Examples of supplemental funding are annual pay increases, "Operation Desert Shield/Storm, the Midwest floods of 1993, and “Homeland Security”.

2.B.3 Continuing Resolutions

Continuing resolutions are stopgap legislation enacted to continue operations when Congress and the President have not completed action on appropriations by the beginning of the fiscal year. A continuing resolution generally covers a short period of time (e.g., one to three weeks). There may be the need for several continuing resolutions at the beginning of the fiscal year before the regular appropriations are enacted.

2.B.4 Operating with No Appropriations

Occasionally a fiscal year will begin with neither regular appropriation nor a continuing resolution in place. In this situation the Coast Guard is authorized to spend funds to provide for national security, protect life and property, and provide for the orderly suspension of operations. Nonetheless, specific and speedy action must be taken to minimize spending. Chapter 6 provides specific instructions and policies for continuing operation without appropriations.

2.B.5 Revolving Funds

Specific provisions of law for “self-financing” operations authorize revolving funds. Funds are obtained by charging "customers" for services or materials furnished. The income from such operations is available in its entirety for meeting authorized expenses. Once capitalized, annual appropriations are not normally made for these funds, although occasionally an appropriation may be made to increase the total capital structure.

2.B.5.a Coast Guard Supply Fund (SF)

The Coast Guard SF is authorized by 14 U.S.C. § 650 and finances the procurement of uniform clothing, subsistence provisions, general stores, technical material and fuel for medium endurance cutters (WMEC) and larger vessels, and certain specified facilities. The fund is normally financed by reimbursements from the sale of goods.

2.B.5.b Coast Guard Yard Fund (YF)

The Coast Guard YF is authorized by 14 U.S.C. § 648 and finances the industrial operations of the Coast Guard Yard. The Yard provides services such as construction, repairs, and alteration of vessels and small boats; and fabrication of buoys and other special items for the Coast Guard and other government agencies. These "customers" pay the Yard for these services from their respective appropriations. The charges to the customer by the Yard are based upon recovery of its total industrial cost.

2.B.6 Gift Fund

The Coast Guard General Gift Fund is authorized by 10 U.S.C. § 2601 and is maintained to account for gifts, devises, and bequests. The Coast Guard uses the money in the Gift Fund as specified by the donor, in the devise, or bequest. This fund is financed by gifts, bequests, or proceeds, rather than by Congressional appropriations.

2.B.7 Revolving Trust Funds

Revolving Trust Funds differ from other revolving funds in that the receipts represent funds held in trust for a specific purpose provided by law (rather than recovery of costs from the sale of goods or services). They differ from other trust funds in that they involve a cyclical operation of receipts and expenditures. The Coast Guard has one Revolving Trust Funds that is the Cadet Fund.

2.B.7.a Cadet Fund

The Superintendent of the Coast Guard Academy uses the Cadet Fund to receive, plan, control, and expend personal funds for Coast Guard cadets. By use of the fund, each cadet is assured of meeting personal expenses while at the Academy and having an adequate balance in a personal account at graduation for officer uniforms, civilian clothing, and graduation leave expenses.

2.B.8 Sales, Fees, Fines, and Other Collections

The Coast Guard is authorized by various laws to collect monies for a wide variety of purposes. These include collections from the sale of goods and services provided to Coast Guard personnel (e.g., sale of meals at Coast Guard dining facilities); sale of goods and services provided to other agencies (e.g., issues of electronic parts from Engineering Logistic Center (ELC) to a Department of Defense (DOD) command) sale of goods and services to the public; fines collected (e.g., boating safety violations); fees collected (e.g., yacht documentation fees); and recovery of federal funds used to clean up oil spills. Funds collected may only be used as authorized by law; they cannot be automatically used to fund operations, and maintenance of Coast Guard units. Units that receive or collect funds must safeguard them, and handle them in accordance with established procedures, and ensure that they are only used for purposes provided by law. Establishing policies and procedures for all funds collected by the Coast Guard is beyond the scope and purpose of this Manual. They can generally be found; however, in the manual governing the particular activity from which a collection of funds results.

2.B.9 Reimbursable

An important subset of funds collected is reimbursable and intra-Coast Guard refunds. Reimbursable programs are created when the Coast Guard as a performing activity, acts as a "seller", and is entitled to reimbursement of all or part of the costs of performance. The annual budget submitted to Congress develops costs and funds required for a program to be carried out through appropriations made directly to the Coast Guard. However, in order for the budget to present a complete picture of the Coast Guard's operations, the cost and obligation data relative to the reimbursable programs are also displayed in the OMB and Congressional Stage budgets.

2.B.10 Imprest Funds

An Imprest Fund is a fixed cash fund, in the form of currency, coin, or government check. The fund is advanced to a duly authorized cashier.

2.B.11 Non-Appropriated Funds

Law authorizes the Coast Guard to establish and use non-appropriated funds. Non-appropriated funds are typically used for morale and recreation programs and by the Coast Guard Exchange System. Policies and procedures governing non-appropriated funds may be found in the Coast Guard Morale, Well-Being and Recreation Manual, COMDTINST M1710.13 (series), and the Coast Guard Non-Appropriated Fund Instrumentalities Manual, COMDTINST 7010.5 (series).

2.B.12 Cash and Property Recovered or Seized

Coast Guard units sometimes recover and seize property including cash in the course of conducting operations. All cash and property recovered and seized by the Coast Guard must be safeguarded and used only for the purposes authorized by law. Policies and procedures for handling property including cash recovered or seized are normally found in the directives governing the activity being conducted when the property is recovered or seized (e.g., Maritime Law Enforcement Manual (MLEM), COMDTINST M16247.1 (series).

2.C Sub appropriation Account Structure - Purpose of Sub appropriation Accounts

Sub appropriation accounts break down appropriations into smaller accounts and functional categories that serve as a tool for assigning responsibilities for funds management.

2.C.1 Sub account Categories - Definitions/ Apportionment

Funding is provided to an agency through an appropriation or fund account. The Coast Guard then must receive an apportionment from OMB before it can “spend” (i.e., incur obligations). Apportionments divide funds available for obligation by time periods (usually quarters for OE).

2.C.1.a Allotment

An allotment is an authorization by Chief of Staff (G-CCS) to appropriation managers to incur obligations within a specified amount.

2.C.1.b Target

A target is an amount established by the appropriation manager for obligation of funds within program areas at an established target unit (i.e., district, maintenance and logistics command, Headquarters, etc.).

2.C.1.c Allotment Level

Each appropriation (project for AC&I), Revolving, Trust and Special Fund is allocated a single allotment. For the direct appropriations and Special Funds, G-CCS issues allotments to appropriation managers in accordance with the approved Operating Stage (OPSTAGE) financial plan, not to exceed the amounts apportioned by OMB.

2.C.1.d Establishing Targets

The appropriation manager establishes targets to reflect the Coast Guard's financial plan and to ensure proper management control, and responsibility for funds below the apportionment and allotment levels. For the OE and RT appropriations, they are identified as administrative operating targets and are equal to the total funding for that administrative target unit (ATU) in a particular appropriation. For all other appropriations they are identified as project targets. ATU's are broken down into sub-targets called Allotment Fund Control Codes (AFC) for the OE and RT appropriations, Supply Fund Accounts for the Supply Fund and project targets for all other appropriations. All targets have a pyramidal effect; for example, AFC's total to operating targets, which aggregate to total allotment.

2.C.1.e Administrative Operating Targets

G-CCS will issue one OE and, where applicable, one RT operating target to each Headquarters Directorate, area/maintenance and logistics command, district, and Headquarters unit. The recipient should treat these targets as firm obligation ceiling levels.

2.C.1.f Program, Project or Activity Category (PPA)

A PPA is a major category within an appropriation, such as the Marine Safety and Maritime Law Enforcement PPA in the Research, Development, Testing & Evaluation (RDT&E) Appropriation.

2.C.1.g Allotment Fund Control Code (AFC)

AFC's represent a breakdown of OE and RT administrative operating targets for specified purposes.

2.C.1.h Project Targets (PT)

PT's represent the planned obligation ceiling for project-oriented efforts in the AC&I, AB, EC&R, and RDT&E appropriations, and in some of the project-oriented special funds. The appropriation manager normally issues project targets to the Headquarters staffs, areas, maintenance and logistics command (MLCs), districts and Headquarters units, for administration at their respective levels.

2.C.1.i Administrative Target Unit (ATU)

ATU's consist of MLCs, districts, (except D5 and D11) Headquarters staff, and Headquarters unit that are authorized to receive funding authority from an appropriation manager.

2.C.1.j Program Element

A program element is funding authority provided to a staff element or unit supported by an ATU.

2.D OE Appropriation Allotment Fund Control Codes (AFC)

The OE AFCs are established as follows (More detailed explanations of how to use the OE AFC are provided in the enclosures of this chapter).

2.D.1 AFC-01 Military Pay

Compensation, subsistence rations and entitlements for active duty, cadets, and reserve members undergoing initial active duty training (IADT), and all required Joint Uniform Military Pay System (JUMPS) support costs.

2.D.2 AFC-08 Civilian Pay

Relocation costs is subject to funded FTE level available in the fiscal year and may require transfer of funds from the units account to offset any additional costs over funded level.

2.D.3 AFC-20 Permanent Change of Station

Travel and transportation expenses incident to PCS orders for military personnel and their dependents.

2.D.4 AFC-30 Operating and Maintenance

General operating and maintenance expenses including ordnance. Travel, per diem and tuition for formal training intended for field execution of training that is not approved nor funded through the Class Convening Schedule For Coast Guard Class "A" and "C" Resident, and Exportable Training Courses, COMDTNOTE 1540. AFC-30"T" is AFC-56 which has been converted to AFC-30 to facilitate further transfer to the field and Headquarters units.

2.D.5 AFC-38 Industrial Support Activity Revolving Fund	All travel, material and applicable labor cost transactions involved in completing an Industrial Service Order (ISO).
2.D.6 AFC-40 Chief of Staff Administrative	Funds for transfer to other control accounts for projects or expenses approved by G-CCS.
2.D.7 AFC-41 Aeronautical Engineering	Depot level maintenance expense incurred in support of the Aviation Logistics Support Program.
2.D.8 AFC-42 Command, Control, Communications and Electronics	Depot level maintenance expenses incurred in support of the Electronic Systems Logistics Support Program.
2.D.9 AFC-43 Civil Engineering	Depot level maintenance expenses incurred in support of the Shore Unit Logistics Support Program.
2.D.10 AFC-45 Naval Engineering	Depot level maintenance expenses incurred in support of the Naval Engineering Logistics Support Program.
2.D.11 AFC-56 Training	Formal training performed as temporary assignment duty (TAD) for civilian and military personnel, including reserve members in the RK, RP and RY programs, and Auxiliarists.
2.D.12 AFC-57 Medical	General expenses to support health care for military members and their dependents.
2.D.13 AFC-75 Reimbursable/Refund Program	A “contra” reimbursable account. It allows tracking of reimbursable obligations and is administered by the Office of Budget (CG-83).

2.D.14 AFC-77 Reimbursable Execution Accounts

Funds O&M purchases made at the ATU and field level with Headquarters (CG-83) managed reimbursable budget authority.

2.D.15 AFC-80 Reimbursements

General account used for establishing and identifying reimbursable agreements. The sole purpose of AFC-80 is to accept funds in the Coast Guard accounting system for reimbursable work for other government agencies and non-government entities in accordance with specific legislative authority. AFC-80 is managed and controlled by CG-83.

2.D.16 AFC-88 Reimbursements for Special Purpose

AFC-88. The CERCLA Management & Support Account, used to support the Coast Guard's capability to respond to external hazardous substance releases (NOT Environmental Compliance and Restoration actions for the Coast Guard's own pollution problems). This is a reimbursable account.

2.D.17 AFC-80, AFC-88 Reimbursable CERCLA Reimbursable Account

Section 104 of the Comprehensive Environmental Response Compensation and Liability Act (CERCLA, 42 USC 9604) became law on December 11, 1980 and authorizes the President to act "Whenever (A) any hazardous substance is released or there is a substantial threat of such a release into the environment, or (B) there is a release or substantial threat of release into the environment of any pollutant or contaminant which may present an imminent and substantial danger to the public health or welfare...." To comply with the first Executive Order (E.O. 12316 dated August 14, 1981), the Coast Guard and the USEPA signed a Memorandum of Understanding (MOU) on January 4, 1982. Following the Superfund Amendments and Reauthorization Act of October 17, 1986, a new Executive Order (12580 dated January 23, 1987) continued delegation of authority and responsibility for response to hazardous substance incidents to the Administrator of the USEPA and the Secretary of the Department of Transportation. Effective May 27, 1988, the two agencies executed the Instrument of Re-delegation that assigns all responsibility for remediation of waste sites to

2.D.17 AFC-80, AFC-88 Reimbursable CERCLA Reimbursable Account (Continued)

the EPA. The 1982 MOU was superseded by a new MOU, dated September 8, 1994, that describes the current funding coordination mechanism that provides the Coast Guard with access to funding from the Hazardous Substance Superfund, the trust fund established under CERCLA.

CERCLA Management and Support (M&S) funds are provided for support of the Coast Guard's hazardous substance removal capability. The funds are limited in application, and some procedures for use are different from standard Coast Guard OE funds. The CERCLA M&S Funding Guide defines the correct applications and the required procedures. It is published by the CERCLA Account Manager (National Pollution Funds Center) and the Marine Environmental Program Manager (G-MOR).

2.D.17.a AFC-80, AFC-88 Management and Support vs. Incident-Specific Funds

The Coast Guard uses two kinds of CERCLA (also called Superfund) funds: M&S funds, also called non-incident funds, and incident-specific funds. Incident-specific funds are used to respond to hazardous substance incidents in the Coastal Zone, including costs for contractors, and Strike Team operations nationwide supporting hazardous substance incidents. Guidance for use of incident-specific CERCLA funds is in the National Pollution Funds Center Reference Guide and the National Contingency Plan.

2.D.17.b AFC-80, AFC-88 Cercla M&S Funds

The Coast Guard's CERCLA M&S funds are used for the functions, activities and equipment/property purchases needed to build or maintain the Coast Guard's capability costs, medical support, and National Response Center communications capability. In addition, the National Contingency Plan (40 CFR 300) categorizes the Coast Guard National Strike Force (NSF) as a Special Force, a national asset available to assist any OSC in either the Coastal or Inland Zone. CERCLA M&S funds are used to build NSF capability to respond to releases of hazardous substances. There are five cost centers responsible for these funds: G-MOR, G-WKS, TC Yorktown, the National Response Center (G-OPF), and the National Pollution Funds Center (NPFC). G-MOR coordinates the use of CERCLA funds by the National Strike Force (the

2.D.17.b
AFC-80, AFC-88
Cercla M&S Funds
(Continued)

NSF consists of the Atlantic, Pacific and Gulf Strike Teams and the National Strike Force Coordination Center), Coast Guard districts and field units. In addition to the discretionary use of these funds, a number of Coast Guard billets/positions are designated as reimbursable and are paid from Superfund.

All funding from the Superfund for all Federal Agencies passes through EPA. The Coast Guard submits budget requests to EPA two years in advance for inclusion in EPA's submission to OMB and then Congress. The amount appropriated by Congress is included in EPA's budget and they convey it to the Coast Guard in an Interagency Agreement (IAG). This budget process is the only way the Coast Guard receives CERCLA.

2.D.17.c
AFC-80, AFC-88
M&S Funding

Each fiscal year, an IAG transfers the funds from the EPA to the Coast Guard. Based on the amount of funding transferred in the IAG, the Coast Guard establishes the AFC-88 reimbursable accounts and bills EPA for reimbursement of expenditures against the accounts.

CERCLA M&S funds may be used only for support of the Coast Guard's **hazardous substance response capability**. It is important to note that the DOT Inspector General conducts audits of the use of CERCLA funds. Training is a common use, but a training course that addresses oil spills in its title demands justification and is probably not appropriate for these funds. DOT auditors have challenged the use of CERCLA funds to purchase an item for general use at a unit. This includes training, response equipment and its maintenance, hazardous substance spill drills and exercises, NRT/RRT meetings and support that is used exclusively for hazardous substance response capability. More difficult, but still possible, is a procurement that is essential for the hazardous substance response mission, with occasional additional use for other purposes. An item intended to support multiple purposes or programs should be purchased with funds from sources appropriate to each of the purposes or programs. For general use items, this

2.D.17.c AFC-80, AFC-88 M&S Funding (Continued)

would mean Coast Guard AFC-30 funds in addition to the CERCLA funds. Exclusive use of CERCLA funds may be considered only if the other uses are incidental and incur no additional CERCLA costs, and CERCLA activities always have priority. Prudent judgment is required in this case.

The majority of CERCLA property and equipment is held in the National Strike Force haz-chem response inventory, which is used for both training and incident response. When equipment from the inventory is consumed or ruined during a CERCLA response, the full cost of replacing the equipment is charged to the CERCLA incident account rather than the M&S account.

The M&S budget shall only fund the following equipment purchases:

a. Equipment consumed during training;
b. New items added to the inventory, and;
c. Other property needed to support haz-chem response capability but not bought for a specific response.

2.E AFC-90, AFC-94 Reserve Training Allotment Fund Control Codes

The RT AFC's are established as follows (A more detailed explanation of how to use the RT AFCs, is provided in the enclosures that follow this chapter).

AFC-90 - Reserve Training Program Expense provides funding for all necessary expenses for the Coast Guard Reserve.

AFC-94 - Used for all reimbursable programs to the Coast Guard reserve to include the Selective Service System, DOD, and other agencies.

2.E.1 AFC-97 Reserve Refund Program

Reserve Program refunds to the OE appropriation. (For Headquarters use only).

2.E.2 AFC-98 Reserve Civilian Pay

Pay and benefits for civilian employees assigned to RT-funded billets and engaged primarily in the administration of the Reserve Program.

2.F Coast Guard Supply Fund

Authorized by 14 U.S.C. § 650 the Supply Fund finances the procurement of commodities of items that are comprised of uniform clothing, subsistence provisions, operations and maintenance stores, technical material and fuel for certain cutters and specified facilities. Items authorized for supply fund stock-age are consumable, low cost with a high demand. The fund is reimbursed from charging customers for inventory sold, and income from these sales is made available to repurchase inventory and meet authorized fund expenses. The table below identifies the various types of Supply Accounts (SA), their appropriation, and the inventory they support.

Supply Account	Appropriation	Inventory Type
81.00xx	XU6	Clothing and Accessories
82.00xx	XS6	Subsistence Provisions
83.01xx	XG6	General Inventory
83.03xx	XE6	Electronics Inventory
83.04xx	XB6	Buoy Appendages Inventory
85.00xx	XF6	Fuel Inventory

SA 81.00: Clothing and Accessories inventory. This inventory consists of fabric, uniform items and accessories (Other Government Agencies (OGA) and Commercial) for sale to eligible uniform patron. Members of other branches of Armed Services may purchase common clothing items subject to inventory availability.

2.F Coast Guard Supply Fund (Continued)

SA 82.00: Subsistence provisions at authorized Coast Guard Dining Facilities (CGDF). This inventory consists of subsistence inventory necessary to support CGDF operations throughout the Coast Guard. However, it does not support contracted (A-76) dining facilities. Inventory management and general stocking criteria is found in the Coast Guard Food Service Manual, COMDTINST M4061.5 (series).

SA 83.00: Operations and Maintenance inventory broken into sub-accounts:

- SA 83.01: General Inventory. Hull, mechanical and electrical inventory, general parts, paint, lube oil, tools and general supplies.
- SA 83.03: Electronics inventory. Electronics parts and materials to support the Management Information of Combined Allowance (MICA).
- SA 83.04: Buoy appendages and parts. ATON supplies and parts to support buoys and related parts.

SA 85.00: Fuel inventory consists of fuel purchased by vessels above 180' in length and selected shore facilities.

2.F.1 References

- United States Code, Title 14, Part I, Chapter 17, Section 650.
- Statement of Federal Accounting Standards (SFFAS) #3, "Accounting for Inventory and Related Property."
- Coast Guard Uniform Supply Operations Manual (USO), COMDTINST M4121.4 (series).
- Supply Policy and Procedures Manual (SPPM), COMDTINST M4400.19 (series).
- Coast Guard Food Service Manual, COMDTINST M4061.5 (series).
- Finance Center Standard Operating Procedures (FINCENSOP), FINCENSTFINST M7000.1 (series).

2.F.2 Responsibilities Office of Financial Policy and Systems (CG-84)

Is designated the Coast Guard Supply Fund Officer and is responsible for financial and inventory management for the Supply Fund.

2.F.3 Internal Controls and Asset Management Division (CG-842)

Is designated as the Coast Guard Supply Fund Management Officer, and is responsible for:

- Developing and implementing Supply Fund financial management and reporting policy and procedures.
- Establishing and reviewing Capital Authorization (CA) levels.
- Gathering and analyzing financial and logistics data to oversee fund performance. Recommend logistics improvements to Commandant G-SLP.
- Implementing financial controls to ensure that obligations and inventories do not exceed Supply Fund CA levels.
- Providing guidance and oversight as necessary.
- Delegating authority and responsibility for local management of SA when appropriate.
- Is responsible for financial systems and CFO oversight of FINCEN operations

2.F.4 Office of Military Personnel (G-WPM)

Is designated Program Manager for Supply Fund Account 81.00 (clothing), and is responsible for:

- Developing and implementing clothing (uniforms) policy and procedures.
- Ensuring that standard operating procedures exist for daily operations, internal control, budgeting, procurement, inventory, sales, and storage.

2.F.5 Office of Worklife (G-WKW)

Is designated Program Manager for the Supply Fund Account 82.00 (subsistence), and is responsible for:

- Issuing instructions regarding subsistence policy and procedures.
- Administering Supply Fund Account 82:00 on a service-wide basis.
- Delegating authority and responsibility for management of dining facilities to Area and District Commanders, Commanders of Maintenance and Logistics Commands and Commanding Officers of Headquarters units.

2.F.6 Finance Center (FINCEN)

Is responsible for the general accounting and reporting for the Supply Fund, and is responsible for:

- Establishing and promulgating accounting procedures for the Supply Fund.
- Maintaining accounting records and submission of accounting and financial reports for all units within the Coast Guard.
- Providing financial statements to the Supply Fund Manager that reflects the service-wide status of the Supply Fund.
- Providing reconciliation reports to Supply Fund activities on a monthly basis.

2.F.7 Activities or Units with S/A 81 and 83 accounts

SA 81 and 83 accounts are responsible for:

- Establishing and maintaining a local Supply Fund program.
- Identifying a Supply Fund manager.
- Safeguarding Supply Fund inventory.
- Ensuring that CA is used effectively, not breached, and returned after unit analysis determines excess exists.
- Stocking only inventory items to meet prescribed customer demand.
- Maintaining accounting and inventory records and providing reports and financial statements in accordance with established policies and guidelines.

2.F.7 Activities or Units with S/A 81 and 83 accounts (Continued)

- Reconciling accounting records against inventory records and making appropriate adjustments.
- Reconciling local financial records with FINCEN accounting records and reporting all imbalances on a monthly basis.
- Identifying and removing excess, obsolete, and unserviceable (EOU) inventory from the Supply Fund.
- Reporting EOU inventory to the Supply Fund Manager on a quarterly basis.
- Maintaining a listing of inventory on hand as of 30 September for recordkeeping and audit purposes. As a minimum the listing shall contain NSN, quantity on hand, unit price, and total value.
- Reviewing and reconciling undelivered orders, accounts payable, accounts receivable, price variance and surcharge accounts monthly.
- Reviewing surcharge rates annually and requesting approval from CG-842 to update.
- Providing performance measure data as requested by the Supply Fund Manager in CG-842.

2.F.8 Designation of Supply Fund Activities/Units and Authorized Sales Methods –Wholesale Inventory Activities

Stock and sell inventory items to a broad customer base consisting of worldwide Coast Guard and authorized OGA customers. Inventory may be sold either over-the-counter, or shipped using authorized transportation methods. Backorders are authorized.

2.F.8.a Retail Inventory Activities

Stock and sell inventory items to a regional or local customer base supporting Coast Guard and authorized OGA customers. Inventory is sold over-the-counter only, and inventory is not shipped. Backorders are not authorized.

2.F.8.b Wholesale Clothing Activities

Stock and sell inventory items to a broad customer base consisting of worldwide Coast Guard members, Exchange stores, and authorized OGA customers. Inventory can be sold either over-the-counter, or shipped using authorized transportation methods. Backorders are authorized.

2.F.8.c Retail Clothing Activities

Stock and sell inventory items to a regional or local customer base consisting of authorized Coast Guard members. Inventory is sold over-the-counter only and not shipped. Backorders are not authorized.

2.F.8.d Dining Activities

Stock and sell (consume) food provisions at authorized CGDFs Coast Guard wide. Food provisions are purchased using the Supply Fund and consumption (sales and losses) is charged to the unit's OE appropriation.

2.F.8.e Fuel Activities

Stock and consume (sales and losses) fuel inventory on-board Coast Guard Cutters greater than 180' in length, and identified Coast Guard shore facilities. Fuel is purchased using the Supply Fund, and consumption is identified and reported monthly from fuel reports. The unit's energy fund in the OE appropriation is charged for all consumption.

2.F.9 Designation of Activities

Activity	Location	Designation	Sale Methods
Engineering Logistics Center (ELC)	Baltimore, MD	Wholesale Inventory Activity	Milstrip Unit Credit Card DD-1149, DD-1148
Lube Oil/Hazmat	Kodiak, AK	Retail Inventory Activity	DD-1149 DD-1348

2.F.9 Designation of Activities (Continued)

Activity	Location	Designation	Sale Methods
Uniform Distribution Center (UDC)	Woodbine, NJ	Wholesale Clothing Activity	Cash, Check, Money Order, Personal Credit Card, Charge-to-Pay, Unit Credit Card, DD-1149, DD-1348, CGES Purchase Order
Uniform Center CG Academy	New London, CT	Retail Clothing Activity	Cash, Check, Money Order, Personal Credit Card, Charge-to-Pay, Unit Credit Card, DD-1149, DD-1348,
Enlisted Dining Facilities	CG Wide	Dining Activities	Cash, Check, Money Order, Card, DD-1149,

2.F.9 Designation of Activities (Continued)

Activity	Location	Designation	Sale Methods
Cutters over 180'	CG Wide	Fuel Activity	DD-1149, DD-1348
Fuel Farm	Kodiak, AK	Fuel Activity	DD-1149, DD-1348

2.F.10 Requests to Establish or Close a Supply Fund Activity

Using a Supply Fund to stock low cost consumable items with a steady, stable demand can be a cost effective means of operating an inventory. The Supply Fund is not affected by continuing resolutions or mandatory spending goals like the OE appropriation. However, the inventory does require oversight, and good stewardship and reporting responsibilities are essential. Activities requesting the establishment of a Supply Fund must understand that the inventory stocked must be bought or sold out, and requires an increased level of care and oversight. Additionally, if no surcharge is collected on the sale of Supply Fund inventory items, the activity must use its OE funds to pay for inventory operation expenses (e.g. losses and obsolescence).

Establishing a Supply Fund activity shall be requested by the activity, endorsed through the applicable District and/or MLC, and forwarded to the Supply Fund Management Officer in CG-842 for review and approval. The request shall be in writing, and fully support the need. The following shall be addressed in the request.

- Unit or Activity requesting the account.
- Amount requested.
- Types of inventory items to be stocked.
- Estimated annual sales.
- Types and numbers of customers supported.
- Personnel and facilities available.

2.F.10 Requests to Establish or Close a Supply Fund Activity
(Continued)

Closing a Supply Fund account works almost in reverse of establishment. The unit Commanding Officer or Officer-in-Charge is responsible for ensuring the integrity of the inventory, undelivered orders, unfilled customer orders, accounts payable, and accounts receivable until the account is closed. Closing a Supply Fund activity shall be documented in writing to CG-842. The letter should address the following, and include a Capital Position Report.

- The remaining on-hand inventory. The Supply Fund must be reimbursed for all on-hand inventories from either the activities surcharge account or current year OE funds. An itemized listing should be prepared and attached to the letter.
- Proper disposal or transfer to another managing activity of the remaining on hand inventory once "bought out" of the Supply Fund.
- Identifying and canceling any pending inventory purchases.
- Identifying and settling any pending debts the fund may have outstanding (i.e. uncollected receivables, etc…).

A final Capital Position Report shall be prepared and forwarded to CG-842 and FINCEN (FF/OGP) after all close actions have been completed to indicate that the authorized CA is available for withdrawal.

2.F.11 Capital Authorization

CA is an operating target assigned by the Supply Fund Manager to a Supply Fund Activity for authorized purposes. It provides a dollar limitation on the value of on-hand inventory and undelivered orders that may be maintained by a SA at any time. Supply Fund activities are provided the CA by CG-842. The CA shall not be exceeded unless approved by the Supply Fund Management Officer in CG-842. The CA for each SA is analyzed and reestablished using various factors (e.g. average inventory, undelivered orders, sales and other factors and requirements). The Supply Fund manager will review the CA and adjust for conformity with changes in supply support requirements. Supply Fund CA will be reviewed monthly. Additionally, at the end of each fiscal year, the Supply Fund Manager will conduct the analysis and provide FINCEN, HQ Program Managers, and Supply Fund activities their new year CA no later than 15 October. With the exception of Transfers-In, no adjustment shall be made to the assigned CA unless approved by the Supply Fund Manager using the approved Financial Transfer Authorization (CGHQ-3200.1), or by annual authorization in October.

2.F.11.a Capital Authorization

The CA may be increased or decreased by review, or by request of the unit. Coast Guard activities, may request the establishment, or closing of a Supply Fund account through the appropriate chain of command. Wholesale Inventory Activities have the authority to increase the CA from inventory "transfers in" from other appropriations or Coast Guard accounts. With the exception of annual reviews and "transfers in", the Supply Fund Management Officer will prepare a Financial Transfer Authorization Form (CGHQ-3200.1) for each change made to the CA. Capital Authorization levels will not be changed without notification and review with the Supply Fund activity.

2.F.11.b Changes to Capital Authorization from "Transfers In"

Wholesale Inventory Activities have the authority to increase their CA by transfers-in of inventory not previously stocked in the Supply Fund. These items are transferred from other Coast Guard accounts (e.g., systems stock purchased by AC&I funds, or carried as OM&S but meets Supply Fund criteria). Transfers-in from other Coast Guard units Supply Fund accounts shall increase inventory

2.F.11.b Changes to Capital Authorization from "Transfers In" (Continued)

and transferred-in without reimbursement accounts. All other transfers-in will increase the inventory and CA accounts. The following policy shall be applied to inventory transferred in:

- The inventory shall support equipment or a platform that will be in service for a period greater than 24 months.
- The inventory quantity shall not exceed 24 months, or the automated maximum allowable stock-age level.
- The items shall be consumable, low cost, demand type (not insurance/project), and have a minimum of four demands per year.
- An audit trail shall be maintained documenting the transfer-in, and all documentation shall be kept for three fiscal years from the date of transfer.

2.F.11.c Changes to Capital Authorization from "Transfers Out"

Transfers out of Supply Fund inventory to other activities without reimbursement is not authorized in accordance with 14 U.S.C. § 650. The Supply Fund shall be reimbursed for all sales or transactions that reduce inventory levels.

2.F.12 Financial Management

Appropriation symbol 70X4535 has been assigned by the Treasury Department to identify the Coast Guard Supply Fund, and shall be used on all SF procurement documents to ensure proper accounting. All accounting transactions shall be in accordance with Finance Center Standard Operating Procedures (SOP), FINCENSTFINST M7000.1. Prompt reimbursement of the Supply Fund is required. FINCEN shall provide documentation to reimburse the Supply Fund no later than 30 days after the receipt of Daily Summary of Expenditure Transactions (CG-3097). SA 82 (subsistence) will be reimbursed the month following the consumption of subsistence items. Supply Fund purchases/obligations shall be reconciled with FINCEN accounting records on a monthly basis. FINCEN shall provide a Supply Fund reconciliation report to each Supply Fund account, monthly, except ELC. ELC shall reconcile and adjust subsidiary ledgers with general ledgers monthly.

2.F.13 Supply Fund Capital Available For Procurement

The capital of the Supply Fund is the summed difference between the assets (i.e., funds with Treasury, inventory, accounts receivable) and liabilities, (i.e., accounts payable). It is a measure or reflection of the overall health of the fund, and provides the amount available for future inventory investment. Fluctuations can occur from one of the following transactions:

- Increase due to transfer-in of inventory from another Supply Fund appropriation.
- Decrease due to transfer of obsolete inventory to the Defense Reutilization and Marketing Office (DRMO).
- Price gains or losses due to re-evaluation (price change) of inventories.
- Congressional approval for an appropriation increase.

2.F.14 Pricing of Supply Fund Inventory

Supply Fund inventory will be valued at historical cost using a moving weighted average method. Most units maintain inventory records/systems that contain one price field. This value is considered both the standard sales price and the cost field. The surcharge is applied at the time of sale, and is reported at month-end using the Coast Guard Adjusted Form CG-3114 (ELC has automated financial systems and trial balance and is exempted from CG-3114 reporting).

Some unit inventory records/systems contain a separate standard sales price and a cost field. In these records, the standard sales price contains a “markup” or surcharge that is applied to all inventory sales, and the cost field is the weighted average cost of the inventory.

All Supply Fund inventory shall have one standard sales price used to charge Coast Guard and OGA customers. Sales prices for SAs 81 and 83 may include a surcharge that is applied at the time of sale. SA 82 and 85 inventories will be valued at cost with no surcharge. All Supply Fund inventory purchases shall be recorded using the weighted average valuation method, and be rounded upward to the next penny if the calculated amount is $.005 or greater.

2.F.14
Pricing of Supply Fund Inventory
(Continued)

Documentation to support valuation (invoices) shall be maintained by FINCEN (the Supply Fund activity must have access to invoice data for valuation testing). The cost should include any setup costs and the cost of Government Furnished Equipment/Material (GFE/GFM) applicable to the procurement of the inventory. Inventory at cost shall be based on the receipt or invoice document, including any discount for prompt payment or the interest charged for a late payment. The accounting office shall ensure the inventory manager is made aware anytime there is a variance of more than one percent (+/-), and the inventory manager shall ensure that the unit price for on-hand inventory is adjusted accordingly.

2.F.15
Standard Price Record File

Unless stored by automated means, units will maintain a file of standard prices by stock number or control number that contains the following information:

- Current Cost.
- Stock/control number.
- Unit of Issue.
- Nomenclature (Item Name).
- Current Standard Sales Price.
- Procurement History.
- Invoice Documents.

2.F.15.a
Review and Revisions of Standard Prices

Units with 81 and 83 accounts are responsible for the establishment, review, revision, and publication of standard sales prices for Supply Fund items stocked within their particular segment of the Coast Guard Supply System. Standard sales prices shall be reviewed a minimum of once per year. Unless accomplished by automated means, standard price adjustments gain/loss shall be documented on the Adjustment Form CG-3114. Ensure that full documentation is kept to support the adjustment. Pricing adjusted by automated means shall have full audit functionality to support price adjustments. Changes may be made during the year using the following criteria:

- To correct pricing errors.
- After unit of issue changes.
- When the inventory cost exceeds the standard sales price and the projected impact on annual sales is $250 or greater.

2.F.15.b Surcharge

A surcharge may be included in the standard sales price to recover certain costs incurred by the Supply Fund for accounts 81 and 83. The surcharge shall consist of elements that will finance operating expenses such as inventory adjustments, excess, and obsolescence. All activities with a surcharge will review all operating expenses annually to ensure that the surcharge is sufficient to cover operations costs. Analysis of surcharge rates and recommendations for changes will be submitted for review and approval to the Supply Fund Management Officer in CG-842 no later than 30 June of each year. The surcharge is authorized to cover the following costs:

- Physical Inventory Adjustments: Adjustments made to the financial record to resolve an imbalance that has resulted from a sounding or physical count.
- EOU inventory: Excess inventory is defined as quantities that exceed the amount expected to be used in normal operations because the amount on-hand is more than can be used in the foreseeable future (over the authorized stock-age level).
- Obsolete inventory is inventory that is no longer needed due to changes in technology, laws, customs or operations. Unserviceable inventory is defined as inventory that is physically damaged and cannot be consumed in operations (sold).
- Bad Debts: Uncollected OGA and commercial accounts receivable shall be reported to FINCEN and the Treasury respectively. S/A with surcharge accounts will use those accounts prior to using current year OE funds.

2.F.15.c Operating Expense Costs

To help keep inventory costs as low as possible, certain costs are more appropriate to be funded from the current year OE appropriation. Cost element items such as physical inventory losses, transportation expenses, EOU inventory expenses and Bad Debts that cannot be absorbed in the surcharge, the cost of spoiled provisions and CGDF deficits, bad debts (uncollected A/R), and administrative expense items are appropriate from the current year OE appropriation. The current year OE appropriation may only be increased from inventory adjustments (gains) that have resulted from a physical inventory.

2.F.15.c Operating Expense Costs (Continued)

- Transportation. The cost of shipping requisitioned or purchased inventory (from the activity to the end user) shall be financed by the current year OE appropriation. Express shipment for clothing shall be charged to the customer (i.e., individual or CGES).
- Physical Inventory Adjustments: Adjustments made to the financial record to resolve an imbalance that has resulted from a sounding or physical count (Gains and Losses).
- EOU: Expenses that cannot be absorbed from the surcharge account may be charged to a current year OE appropriation, if funds are available. Units shall request additional funding from HQ program offices to ensure that EOU inventory is either bought out, or a current year OE reserve is in place to offset the allowance for loss.
- Spoiled provisions. CGDF shall be documented using a Report of Survey that is submitted to the Supply Fund Management Officer in CG-842 for all losses of $5,000 and above.
- Dining facility deficits. Accumulated deficits that cannot be absorbed in normal operations. These are approved by G-WKW.
- Losses from fluctuations in fuel shall be charged to the current year OE appropriation, and AFC-30 energy fund for each unit.
- Bad debts. Uncollected OGA and commercial accounts receivable shall be reported to FINCEN and the Treasury respectively. Once all collection efforts have been made, uncollected accounts receivable shall be charged to the unit's current year OE appropriation. Units shall request additional funding from HQ program offices to ensure that bad debts are either written off in a timely manner.
- Administrative expenses. The expense of procurement, warehousing, packing, crating and handling, pertaining to a Supply Fund item may not be financed by the Supply Fund or included in the standard price of an item, but shall be charged to the appropriation available for these purposes.

2.F.16 Stocking Criteria For Wholesale Inventory Activities

Generally, program managers are responsible for funding new items placed into the Supply Fund.

Shall be limited to Coast Guard unique material, with exception. Stocking of OGA material is by limited exception and must be in accordance with the Coast Guard Uniform Supply Operations Manual, COMDTINST M4121.4 (series). Inventory may be stocked at the wholesale inventory site, or at a remote stock point. The following criteria must be met in order to stock inventory at a Wholesale Inventory Activity. Exceptions must be requested through the Supply Fund Management Officer in CG-842.

- Consumable items only.
- Four demands per year or more.
- Unit price $5,000 or less.
- Must support equipment or platform with an active life expectancy of 24 or more months.
- No more than 24-month inventory level will be stocked.
- No project or insurance stock.

2.F.17 Stocking Criteria For Retail Inventory Activities

Shall support operations at the regional or user-level, and inventory stocked can be from either OGA or commercial sources. Retail inventories shall not stock OM&S material carried in other CG accounts, without prior approval from CG-842. The following criteria must be met in order to carry inventory in a retail inventory. Exceptions must be requested through CG-842.

- Consumable items only.
- One demand per year or more.
- Unit price $1,000 or less.
- No more than six-month inventory level will be stocked.
- No redistribution or mail/freight of inventory to end-user (over-the-counter sales only).

2.F.18 Stocking Criteria For Wholesale Clothing Activities

Shall maintain inventory for sale to Coast Guard activities, exchanges and authorized members. These activities may stock, sell or provide fabric to manufacturers as Government Furnished Material (GFM). The cost of the provided GFM shall be included in the cost of the finished inventory item. Fabric provided as GFM shall be accounted for, and valued as inventory, pending the receipt of the finished inventory item, and will be dropped from the inventory by using Coast Guard Adjustment Form (CG-3114). Wholesale Clothing Activities may sell inventory across-the-counter, retail clothing activities, or through the mail order system to authorized recipients. The following criteria must be met in order to carry inventory in a wholesale clothing activity. Exceptions must be requested through CG-842.

- Uniform items, fabric and uniform accessories only.
- Four demands per year or more.
- Unit price $1,000 or less (excludes fabric).
- No more than 12-month inventory level will be stocked.

2.F.19 Stocking Criteria For Retail Clothing Activities

Shall sell unique uniforms and accessories from the Wholesale Clothing Activity, OGA, and commercial sources. Supply system uniforms shall be requisitioned from the Wholesale Clothing Activity. The following criteria must be met in order to carry inventory in a retail clothing activity. Exceptions must be requested through CG-842.

- Uniform items and uniform accessories only.
- Two demands per year or more.
- Unit price $500 or less.
- No more than six-month inventory level will be stocked.

2.F.20 Stocking Criteria For Dining Activities

Shall order food provisions to meet a 60-day requirement.

2.F.21 Stocking Criteria For Fuel Activities

Shall order and stock fuel to meet operational requirements.

2.F.22
Stock Record

Automated or manual stock/inventory records shall be maintained for all Supply Fund inventory. All issues, receipts, gains, losses and financial adjustments will be posted to the record to ensure that the record balances with the inventory. Inventory levels shall be based on demand data, and no account shall carry more than the authorized inventory level.

2.F.23
Annual Inventory Listing

All units shall maintain an inventory list of on-hand items as of 30 September of each year. The list shall be maintained for three fiscal years. The list shall consist of the following minimum elements:

- Item identification number (i.e. NSN, P/N, Fuel Type, etc…)
- Quantity on-hand.
- Standard price cost.

2.F.24
Physical Inventories

Physical inventories are a means to ensure that accurate inventories are maintained for sale and that financial statements when prepared are correct. It is imperative that all Supply Fund activities schedule, conduct and complete all required inventories. Inventories are generally completed in five phases (preparation, count, reconcile, adjust, and report). Policy for physical inventories can be found in the Uniform Supply Operations Manual (USO), COMDTINST M4121.4 (series), and the Supply Policy Procedures Manual (SPPM), COMDTINST M4400.19 (series).

2.F.25
Reports of Survey

The Supply Fund shall be reimbursed for all lost, missing, damaged or destroyed inventory in all accounts. The Supply Fund unit/activity, district, or MLC will reimburse the Supply Fund for all losses that result from approved Reports of Survey, from either the Surcharge Account or current year OE appropriation.

A Report of Survey is required for all lost, missing, damaged or destroyed inventory greater than these thresholds, or when neglect, misuse, theft or fraud is suspected. Commandant CG-842 is the final approving authority for all Reports of Survey exceeding $5,000.

2.F.26 Cash Sales

Cash sales are authorized at Wholesale Clothing and Retail Clothing Activities, and CGDF. Cash sales are for over-the-counter purchases or CGDF consumption and cannot be accepted for backordered inventory.

2.F.27 Personal Checks and Money Orders Sales

Personal checks and money orders may be accepted at Wholesale Clothing and Retail Clothing Activities, and CGDF. Personal checks shall be completed as follows:

- Made out to "U.S. Coast Guard."
- Individual's social security number or employee identification number shall be entered on the front of the check.
- No third party checks can be accepted.

2.F.28 Change Making Fund

A Change Making Fund is authorized for Wholesale Clothing, Retail Clothing Activities, and CGDFs. The Commanding Officer or Officer-in-Charge shall ensure that policies and procedures exist for the safeguarding and reporting of the Change Making Fund. Detailed policies and procedures regarding Change Making Funds may be found in the FINCEN SOP. Change Making Funds are authorized in the following amounts.

Supply Fund Activity Type	Amount
Wholesale Clothing Activities	$100.00
Retail Clothing Activities	$ 50.00
Small CGDF	$50.00
Medium CGDF	$75.00
Large CGDF/ISC	$200.00

2.F.29 Cash, Check and Money Order Safeguards

The Commanding Officer or Officer-in-Charge is responsible for providing adequate facilities and safeguards to protect public funds (cash, checks, money orders) collected from sales. Standard operating and audit procedures shall be established that will ensure those safeguards exist. Monies collected from over the counter or mail order sales shall be deposited into a lock-box account in accordance with prescribed policies and procedures detailed in the FINCEN SOP.

2.F.30 Organizational Clothing Sales

Wholesale Clothing Activities may sell organizational clothing to Coast Guard units. Units purchasing organizational clothing shall use the Requisition and Invoice/Shipping Document, DD-1149 citing unit funds, or the unit's procurement credit card.

2.F.31 Government Furnished Material

GFM (e.g. fabric…etc.) required specifically for the manufacture of Supply Fund items shall be stocked and provided as required. The following policy applies to GFM in the Supply Fund.

- Requests for approval to stock GFM shall be forwarded to CG-842 by the activity.
- GFM will be carried as inventory at (acquisition) weighted average cost.
- GFM issued to a vendor will not initially be deducted from the inventory, and will be accounted for as on-hand inventory. The stock record will be noted to reflect GFM in the hands of vendors.
- The value of GFM issued to a vendor that is consumed in the manufacturing process will be included in the cost of the manufactured Supply Fund item.
- The value of GFM consumed shall be deducted from the inventory record when the manufactured item is received. The remaining GFM quantity should either be returned or kept at the vendor's site.
- GFM quantities no longer needed should be disposed of as excess and the cost charged to the unit's surcharge or AFC-30 account.

2.F.32 Returned Items

Occasionally, customers will request that previously sold items be returned for credit because of quality, form, fit or function reasons. Normally, these requests are received from customers using either a Report of Discrepancy (ROD), or a Quality Deficiency Report (QDR). Ensure that all ROD/QDR's that have been approved, to credit the activity are forwarded to FINCEN (OGP) so that an accounts receivable can be established. Accepting

2.F.32 Returned Items
(Continued)

previously sold items and providing credit creates good customer relations, but consideration must be given to the item, quantity returned and the activity ability to credit the customer. The following return/credit policy applies to the Supply Fund inventory items from the time of sale. Original sales documentation must be copied and kept with all return documents to support the credit amount. Credit will be given in the amount the customer was originally charged, not the current sales price. Documentation to support the return and credit must be kept for a period of three years from date of credit.

SUPPLY FUND ACTIVITY TYPE	TIME FRAME
Wholesale Inventory Activity	12 months
Retail Inventory Activity	3 months
Wholesale Clothing Activity	12 months
Retail Clothing Activity	3 months

2.F.33 Excess, Obsolete and Unserviceable (EOU) Inventory

EOU shall be identified and reported to Commandant (CG-842) on a quarterly basis. All Supply Fund activities shall aggressively work to identify and remove EOU inventory from stock using either the activities surcharge account, or current year OE appropriation. The activity shall ensure that sufficient surcharge, or current year OE funds are available to cover all EOU.

The activity is encouraged to use the Material Returns Program for the reporting of excess OGA purchased inventory and seek credit to the Supply Fund. Should full credit not be provided, the shortage amount shall be charged to either the activity's surcharge account, or current year OE funds.

EOU inventory shall be identified and reported on a quarterly basis to Headquarters program offices.

2.F.34 Reporting

Inventory and financial management of the Coast Guard Supply Fund is accomplished by the consistent application of good stewardship responsibilities and the controls gained through financial reporting. Reporting for Supply Fund activities are summarized below. Detailed reporting procedures can be found in the FINCEN SOP. Complete reporting instructions for dining facilities are provided in the Coast Guard Food Service Manual, COMDTINST M4061.5 (series). Activities are encouraged to use E-reporting methods for all forms provided that all required data elements are included.

2.F.34.a Wholesale Inventory Activities Report Matrix

Report	Frequency	When	Submit To
Capital Position Report Package	Monthly	Nlt 5th Work Day	CG-842 FINCEN (FF/OGP)
Inventory Certification Ltr.	Annual	Nlt 5th October	CG-842 FINCEN (FF/OGP)
Supply Fund Inventory Report	Quarterly	Nlt 5th Work Day	G-SLP
Surcharge Analysis Report	Annual	Nlt 30th June	CG-842
Trial Balance (if one is maintained)	Monthly	Nlt 5th Work Day	FINCEN (FF)

2.F.34.b Retail Inventory Activities Report Matrix

Report	Frequency	When	Submit To
Supply Fund Inventory Report	Quarterly	Nlt 5th Work Day	G-SLP
Capital Position Report Package	Monthly	Nlt 5th Work Day	CG-842 FINCEN (FF/OGP)
Inventory Certification Ltr.	Annual	Nlt 5th October	CG-842 FINCEN (FF/OGP)
Surcharge Analysis Report	Annual	Nlt 30th June	CG-842

2.F.34.c Wholesale Clothing Activities Report Matrix

Report	Frequency	When	Submit To
Capital Position Report Package	Monthly	Nlt 5th Work Day	CG-842 FINCEN (FF/OGP)
Inventory Certification Ltr.	Annual	Nlt 5th October	CG-842 FINCEN (FF/OGP)
Supply Fund Inventory Report	Quarterly	Nlt 5th Work Day	CG-842 G-SLP

2.F.34.d Dining Activities Report Matrix

Complete reporting instructions for CGDF's can be found in Coast Guard Food Service Manual, COMDTINST M4061.5 (series).

2.F.34.e Fuel Activities Report Matrix

Report	Frequency	When	Submit To
Fuel Report	Monthly	Nlt 5th work day	(FF/OGP) (FF/OGP)

2.F.35 Capital Position Report

The Supply Fund Capital Position Report contains critical information needed to evaluate and report on the Supply Fund. It provides the Supply Fund Management Officer critical summary information regarding inventory, receipts, issues, undelivered orders, unfilled customer order and capital available for procurement. The Supply Fund Capital Position Report Package is due no later than five days after month end. Supply Fund activities are encouraged to develop and submit these reports electronically (email). Local development of the CG Forms is authorized as long as all date fields are contained in the electronic submission.

The Capital Position Report will be slightly different for the various types of Supply Activities. The ELC shall prepare and submit a Capital Position Report (electronic) and Trial Balance only.

- Capital Position Report (Format)
- Capital Authorization Control (CG-3116)
- Daily Summary of Receipt Transactions (CG-3095)
- Daily Summary of Expenditure Transactions (CG-3097)

2.F.35.a Capital Position Report For Wholesale Inventory Activities – Wholesale Clothing Activity

Unit Name: _____

Supply Account: _____ Month/Yr. _____

Capital Authorization	XXX,XXX.XX
Adjustments from Transfers-In (+)	XXX,XXX.XX
Adjustments from Transfers-Out (-)	XXX,XXX.XX
Adjusted Capital Authorization	XXX,XXX.XX
Inventory at Standard Price	XXX,XXX.XX
Purchase Price Variance (+/-)	XXX,XXX.XX
Inventory at Cost (-)	XX,XXX,XX
Undelivered Orders (-)	XXX,XXX,XX
Commitments (-)	XXX,XXX,XX
Unfilled Customer Orders (+)	XXX,XXX,XX
Capital Available for Procurement	XXX,XXX,XX
Surcharge XXX,XXX,XX	

Receipts:	COMM	SSA	OCGA	OGA	MISC	TOTAL
Issues:	CFEU	SSA	OCGA	OGA	MISC	TOTAL

2.F.35b Capital Position Report For Retail Inventory Activities – Retail Clothing Activity

Unit Name: _____

Supply Account: _____ Month/Yr._____

Capital Authorization	XXX,XXX.XX
Beginning Inventory	XXX,XXX.XX
Undelivered Orders (-)	XXX,XXX.XX
Ending Inventory (-)	XXX,XXX.XX
Capital Available for Procurement	XXX,XXX.XX
Surcharge XX,XXX.XX	

Receipts:	COMM	SSA	OCGA	OGA	MISC	TOTAL
Issues:	CFEU	SSA	OCGA	OGA	MISC	TOTAL

2.F.36 Capital Available For Procurement

The capital available for procurement shall normally be within 10 % of the overall inventory investment. The Supply Fund Management Officer shall review these quarterly and contact units and analyze their CA future requirements.

2.F.37 Unfilled Customer Orders

Unfilled customer orders (anticipated sales) will be considered in the capital available for procurement formula for Wholesale Inventory Activities and Wholesale Clothing Activities.

2.F.38 Supply Fund Inventory Report

This quarterly report is required for Wholesale Inventory, Wholesale Clothing, Retail Inventory and Retail Clothing Activities. The ELC is exempted from reporting any elements already reported on their Inventory Control Effectiveness (ICE). It provides critical program information regarding the Supply Fund inventory, and can show the unit and the Supply Fund Management Officer areas that need attention or additional oversight. The report shall be submitted each quarter for that performance period.

UNIT NAME: _____

SUPPLY ACCOUNT: _____

PERIOD: _____

PART I –PERFORMANCE

1. Issue Effectiveness
   a) Number of Requisitions
   b) Number of Issues
   c) Issue Effectiveness Rate (percent)(sum b/a)

2. Issue Denials
   a) Number of Issues
   b) Number of Denials
   c) Denial Rate (percent) (sum b/a)

3. Receipts Processed on Time
   a) Number processed
   b) Number posted to record and stored on time
   c) On time Receipt Rate (percent)(sum b/a)

4. Storage location Accuracy
   a) Number of locations Checked
   b) Number of locations without Errors
   c) Location Accuracy Rate (percent)(sum b/a)

2.F.38
Supply Fund
Inventory Report
(Continued)

5. Valuation Accuracy
   a) Number of items Checked
   b) Number of items without Errors
   c) Valuation Accuracy Rate (percent)(sum b/a)

PART II – INVENTORY

1. Segments of Inventory
   a) Total Value of Inventory
   b) Value of EOU

2. Reviews of Inventory
   a) Value of EOU
   b) Value of EOU disposed

3. Accuracy of Inventory
   a) Value of Inventory
   b) Value of Inventories Completed
   c) Value of Gains processed
   d) Value of Losses processed
   e) Total adjustments processed (sum c+d)
   f) Inventory Accuracy Rate (percent)(sum e/a)

2.G AC&I Project Identification System

AC&I projects are numbered to coincide with the appropriate AC&I program areas (budget activities) designated as follows:

MAJOR ACTIVITY TITLE NUMBER	FISCAL ACTIVITY	PROJECT YEAR (NOTE 1)	MAJOR (NOTE 2)
0	X	XX	Administrative Expenses
1	X	XX	Vessels
2	X	XX	Aircraft
3	X	XX	Shore Facilities Pollution Control, and Navigational Aids
4	X	XX	Electronics & Other
5	X		Deepwater Equipment
6	X	XX	Reimbursable Projects

Notes:

1. Second digit indicates the last fiscal year (FY) in which funds can be obligated.

2. Third and fourth digits indicate the specific project serial number.

2.G.1 AFC-72 Retired Pay

Compensation and entitlements for Coast Guard retirees.

2.G.2 AFC-73 Retired Medical

Medical expenses to support health care for Coast Guard retired members and their dependents.

2.H Transfers

A transfer is the shifting of funds **between** appropriations. The basic rule with respect to transfers is: Transfer is prohibited without statutory authority. Two exceptions to this rule are refunds and reimbursements.

2.H.1 Refunds

Government Accounting Office (GAO) and OMB identify refund transactions as bookkeeping adjustments to correct errors such as overpayments and incorrect disbursements and to fund common services provided by one appropriation to another.

2.H.2 Reimbursements

Reimbursement transactions are repayment for commodities or services provided by one agency or appropriation to another that is authorized by law to be credited directly to specific appropriation and fund accounts.

Encl 2-1
AFC-01 Military Pay/CG-83

Compensation, subsistence rations, entitlements, special, and incentive pay for active duty, and cadets

1. Chargeable Expenses

   a. Basic pay.

   b. Subsistence, housing, cost-of-living and clothing allowances (includes clothing-in- kind).

   c. Special and incentive pays (e.g., career sea pay, Hazardous Duty Incentive Pay (HDIP), Aviation Career Incentive Pay (ACIP), responsibility pay, diving duty pay).

   d. Separation allowances including unused accrued leave, and severance pay.

   e. Employer's contribution for benefits including Federal Social Security Insurance Tax (FICA).

   f. Reenlistment bonus payments and cash awards for beneficial suggestions.

   g. Family and unaccompanied personnel leased housing, including rent and utilities.

   h. Net value of Coast Guard Supply Fund subsistence provisions consumed by Coast Guard dining facilities.

   i. Subsistence furnished to enlisted members by another service dining facility and subsistence expense for Coast Guard Auxiliary members.

   j. Death gratuities.

   k. Cost of educating dependant children for members serving in foreign countries.

Encl 2-1
AFC-01 Military Pay/ CG-83
(Continued)

2. Redistributed Cost - Military pay and allowances are first charged to AFC-01. Under the intra-Coast Guard refund program, costs are marked for redistribution as follows:

   a. Gross pay and allowances accruing to members performing work that will subsequently be reimbursed by another appropriation, or government agency, will be subsequently charged to AFC-77.

   b. Gross pay and allowances accruing to industrial personnel at the Coast Guard Yard will be subsequently charged to the Yard Fund.

   c. Gross pay and allowances accruing to members engaged in AC&I, EC&R, RDT&E, BS or RT programs will be subsequently charged to the respective appropriation.

   d. Accrued mileage allowance that is not credited to a member's pay account and for which travel must be performed prior to payment will be subsequently charged to AFC-20.

3. Expenses Not Chargeable to AFC-01

   a. Miscellaneous ordinary recruiting expenses other than occasional meals for applicants for enlistment are chargeable to AFC-30.

   b. Inactive duty for training (IDT) drill pay, annual training pay and allowances (ADT-AT), short-term active duty special work for the reserve component (ADSW-RC) pay and allowances, and other training duty (ADT-OTD) pay and allowances.

Encl 2-2
AFC-08
Civilian Pay /CG-83

Compensation, benefits and costs associated with civilian Working Capital Funds, Permanent Change of Station (PCS) and reimbursable positions in the Coast Guard.

1. Chargeable Expenses

   a. Regular pay, overtime pay, lump sum terminal leave, holiday pay, Sunday premium pay, hazardous duty pay, night work differentials, post differentials, cost-of-living allowances for permanent and temporary employees in full-time, part-time and intermittent employment categories. Disability retirees are included.

   b. Special Act Performance awards, on the spot cash, SES bonuses, Presidential rank award and awards associated with gains sharing efforts.

   c. Employer's contribution for benefits including FICA, health insurance plans, retirement plans, life insurance plans, and unemployment compensation.

   d. Severance pay and uniform allowances.

   e. Civilian Working Capital Fund and related cost.

   f. Compensation and benefits for all OE funded civilian employees, including non-ceiling employees (e.g., cooperative education students, student aids, summer aids, and federal junior fellows) and employees not otherwise covered by other appropriations.

   g. Federal employees compensation charges covering compensation costs for injuries and deaths.

   h. AFC-08 pays for personnel costs not specifically funded by other appropriations.

2. Expenses Not Chargeable to AFC-08

   a. Compensation and benefits accruing to civilians engaged in AC&I, EC&R, RDT&E and RT programs are charged to the respective appropriation.

Encl 2-2
AFC-08
Civilian Pay /CG-83
(Continued)

b. Compensation and benefits accruing to industrial personnel at the Coast Guard Yard are charged to the Yard Fund.

Encl 2-3
AFC-20 Permanent Change of Station (PCS)

Travel and transportation expenses incident to PCS orders for military personnel and their dependents.

1. Chargeable Expenses

   a. Mileage or transportation-in-kind and per diem furnished to military members and their dependents for travel incident to PCS orders including recall to active duty from retirement status, call to extended active duty (EAD) from reserve status ADSW for over 139 days, and retirement orders.

   b. Temporary lodging allowance (TLA)/expense (TLE) and dislocation allowance (DLA) paid to military members.

   c. Transportation and storage of household goods, motor vehicles, and house trailers furnished to military members.

   d. Miscellaneous reimbursable expenses for military personnel incident to PCS travel as authorized by the Joint Federal Travel Regulation (JFTR.

   e. Mileage allowance or transportation-in-kind furnished upon separation.

   f. PCS-related travel and transportation expenses of personnel in connection with AC&I or RDT&E are charged to the respective appropriation.

2. Expenses Not Chargeable to AFC-20

   a. Civilian employee relocation entitlements are funded and expensed through AFC-08.

   b. Travel and transportation expenses of personnel on assignment to, or in connection with, work that will be reimbursed by another government agency or appropriation are charged to AFC-77 or AFC-94.

Encl 2-4
AFC-30 Operating and Maintenance/ CG-83

General operating and unit level maintenance expenses. Expenses in support of the Coast Guard Exchange System (CGES) and Morale, Well-Being and Recreation Activities (MWR) programs are defined in the Coast Guard Non-Appropriated Fund Activities Manual, COMDTINST M7010.5 (series) and the Coast Guard Morale, Well-Being and Recreation Manual, COMDTINST M1710.13 (series).

In order to maximize the effective use of AFC-30 funds and allow unit commanders maximum flexibility for the management of normal recurring expenses, funds are passed to the lowest level bearing both the operational and funding responsibility. In general, all funds should be programmed to the unit level with only a small contingency. Maintenance of large contingency accounts fosters a dependency on the contingency and leads to inefficiency in spending patterns, usually displayed in excessive fourth quarter expenditures.

1. Chargeable Expenses

   a. All direct, indirect, and overhead costs, not chargeable to another category, associated with aircraft depot level logistics support. Training and associated travel required to acquire or retain knowledge/skill necessary for an authorized billet or position at AR&SC is considered a direct overhead cost.

   b. Temporary Duty (TD) and TAD travel for administrative purposes (except AFC-41, 42, 43 and 45 project-related travel or operational purposes).

   c. TAD travel expenses of personnel in connection with effectiveness and compliance review visits, and integrated logistics support projects.

   d. Pay, allowances, awards, and employer's contributions and reservists on active duty for special work in support of the active component (ADSW-AC) not chargeable to a more specific account. Awards to military and civilian personnel as permitted by chapter 5, section K of this Manual.

Encl 2-4
AFC-30 Operating and Maintenance/ CG-83
(Continued)

e. Transportation (shipping) expenses of Automated Data Processing (ADP) or training equipment.

f. Vehicles in support operation shall be purchased with AFC-30 funds. This includes all passenger vehicles and trucks supporting operations other than the Civil Engineering Program (i.e., directly supporting facility maintenance activities).

g. Transportation (shipping) expenses, except for items procured with other AFC's or the Supply Fund. Includes shipping of Type I, II, and IV aeronautical material from AR&SC or other repair sites to an air station for end use or stock.

h. GSA vehicle damage repairs or loss reimbursement.

i. Leased communication circuits, communications services and expenses.

j. Utility services except those charged to AFC-01 for the Coast Guard leased housing program.

k. All energy and energy efficiency retrofit projects of $75,000 or less approved for Headquarters funding through the Facility Energy Efficiency Fund (FEEF).

l. Rental of property and equipment.

m. Purchase and maintenance of equipment not within the scope of another AFC.

n. Subsistence and clothing for rescued persons at sea.

o. Expenses incident to seized property including aircrafts.

p. Repair of private auxiliary aircrafts damaged while operating under Coast Guard orders, or reimbursement to Auxiliarists for such repairs.

Encl 2-4
AFC-30 Operating and Maintenance/ CG-83
(Continued)

q. Household Effects (HHE) claims against the Coast Guard (e.g., damages during government-ordered moves or damages while occupying government-owned/leased quarters).

r. Expenses for the operation of district mobile training teams.

s. General services for recurring maintenance and repair of shore structures and facilities, cutters, electronics equipment installations, small craft, vehicles, ordnance equipment, recreation equipment, and certain ATON.

t. All Standard Support Level (SSL) boat expenses, regardless of amount, accept those involving fire, flooding, grounding and collision damage or costs above the Engineering Change Request (ECR) cutoff limit.

u. Hull, Mechanical and Electrical (HM&E) ECRs and modifications to standard boats costing less than $500 per boat.

v. Procurement of vessels, floating dry docks, boat trailers, barges, and houseboats that are under the AC&I threshold.

w. Routine unit level services, supplies and materials for repair, maintenance and operation of cutters and small boats as delineated by the appropriate CCMPs (Cutter Class Maintenance Plan) and/or CASREP (Casualty Report) levels.

x. Buoy- related expenses for routine procurement, outfitting, installation, and maintenance (including costs of chain and sinkers), not part of a Waterways AC&I Project. Consumable materials for installation, maintenance and repair of fixed ATON structures, including day board fabrication, ATON signal equipment, solar panels, and primary and secondary batteries (does not include piles and towers used by ATON Teams or Construction/Buoy Tenders).

Encl 2-4
AFC-30 Operating and Maintenance/ CG-83
(Continued)

y. Materials, services, and replacement systems, not designated for procurement by AFC-43, required for routine maintenance and repair of unmanned ATON.

z. Purchase costs, contracted maintenance costs, corrective maintenance, repair, modification, or replacement of non-consumable Marine Environmental Protection (MEP) response equipment (e.g. Vessel of Opportunity Skimming System (VOSS), non-fixed Spilled Oil Recovery System (SORS) equipment, off-shore boom, temporary oil storage devices, off-loading systems, if not qualified to be recovered from the responsible party or the oil pollution fund.

aa. Spare parts, consumables, and non-contracted maintenance for MEP response equipment, if not qualified to be recovered from the responsible party or the oil pollution fund.

ab. Repair and maintenance of aviation ground support equipment, ground and ship-based command, control, communications and electronics equipment systems, including communications equipment and ATON, used to support aircraft operations, when not meeting the criteria for funding under AFC-42.

ac. Local service contracts for calibration (includes CO Preventive/Planned Maintenance System (PMS) and corrective maintenance within the unit's capability) and minor repair of electronics equipment and special tools. Unit level maintenance and spare parts (ERPAL) for electronics equipment.

ad. Maintenance of towers not meeting the criteria for funding from AFC-42 or AFC-43.

ae. Morale equipment, memberships (in the name of the unit) at local commercial athletic facilities where approved and services per the Coast Guard Morale, Well-Being and Recreation Manual, COMDTINST M1710.13 (series).

Encl 2-4
AFC-30 Operating and Maintenance/ CG-83
(Continued)

af. Cost of ceremonies (except those related to other appropriations) and cultural awareness programs (See chapter 5, section K of this Manual).

ag. Membership fees for the Coast Guard (See chapter 5, section K of this Manual).

ah. Seasonal decorations, which are not for personal use and are nonsectarian (See chapter 5, section K of this Manual).

ai. Refreshments and food as permitted by chapter 5, section K of this Manual.

aj. Organizational and personal protective clothing, as well as flight clothing and survival equipment (See chapter 5, section K of this Manual and V-6 to Supply Policy and Procedures Manual (SPPM), COMDTINST M4400.19 (series)).

ak. Coast Guard uniforms for Navy chaplains on duty with the Coast Guard (See enclosure V-6 to Supply Policy and Procedures Manual (SPPM), COMDTINST M4400.19 (series)).

al. Administrative expenses associated with command religious activities.

am. Miscellaneous administrative expenses (e.g., paper, pens, floppy disks, binders, toner, ribbons, markers, etc.).

an. Printing and reproduction expenses.

ao. All medical and dental supplies, equipment maintenance and equipment less than $500 to support sick bay operations. (A sick bay is a medical facility, afloat or ashore, with at least one permanently assigned health services technician, but no medical doctor.) (See enclosure 2-12, AFC-57 guidance of this Manual).

ap. Housekeeping and maintenance supplies, materials, and services.

Encl 2-4
AFC-30 Operating and Maintenance/ CG-83
(Continued)

aq. Un-vouchered expenditures for confidential investigations.

ar. All furnishings and office labor saving devices regardless of cost, except furnishings provided by an AC&I project (See Civil Engineering Manual, COMDTINST M11000.11 (series) and chapters 5 and 7). This also includes furnishings for Coast Guard Flag and Command Quarters in accordance with the Coast Guard Housing Manual, COMDTINST M1110l.l3 (series).

as. Procurement, installation and maintenance of general-purpose information resources management (IRM) hardware and software, except if required for a specific 4X project, part of a C^4 system, or qualifies for AC&I.

at. ADP services, including timesharing, development of software, systems analyst and/or programming services, and system operation maintenance.

au. Logistics studies.

av. Interservice Support Agreements (ISSA) in connection with logistics activities.

aw. Configuration management project expenses not qualifying for AC&I funding (See chapter 5, section M of this Manual).

ax. Purchase and/or installation of logistics related ADP hardware/software, except within the AC&I criteria (See chapter 5, section M of this Manual).

ay. Accessory surcharges and credit allowances for retail stock losses applied to materials issued to the Coast Guard by DLA, GSA and OGA when the cost of material is chargeable to the OE appropriation and the Supply Fund.

az. Adjustments to the Supply Fund inventory accounts as prescribed in the Supply Policy and Procedures Manual (SPPM), COMDTINST M4400.l9 (series).

Encl 2-4
AFC-30 Operating and Maintenance/ CG-83
(Continued)

ba. Reimbursements to the Supply Fund for Coast Guard dining facilities (CGDF) for spoiled goods, deficits, etc., that the CGDF cannot reasonably accommodate.

bb. Interest penalties for AFC-30 funded goods/services.

bc. DELPHI and CGOF chargeback's.

bd. Consulting services not related to a specific AFC project or another appropriation.

be. Moving costs for non-PCS intra-district government ordered moves.

bf. Type III and V aeronautical material only as defined in Coast Guard 298 that do not meet specific AFC-41 thresholds/requirements.

bg. All aircraft landing fees.

bh. Deployable rescue equipment.

bi. Credit card and traveler's check fees associated with the Cash Management System.

bj. Procurement, transportation, and maintenance of ammunition, pyrotechnics, and other munitions necessary to meet requirements that are not Navy funded.

bk. Procurement, transportation, maintenance and repair of small arms, small arms spare parts, line throwing equipment, accessories, and maintenance supplies.

bl. Service, supplies and materials required for design, modification, installation, removal, and maintenance of Navy supported combat systems and components not Navy funded or funded under AFC-30 or AFC-45.

Encl 2-4
AFC-30 Operating and Maintenance/ CG-83
(Continued)

bm. Plaques, medals, trophies, badges, and similar items that acknowledge individuals and organizations, which significantly contribute to Coast Guard programs, missions, or operations, including state and local governments and commercial and nonprofit organizations, including reasonable expenses of ceremony and presentation, in accordance with 14 U.S.C. § 93(w) and the limitations as set forth in this Manual (See chapter 5, section K of this Manual).

bn. Service, supplies, and equipment for armory and range support directly related to small arms training.

bo. Travel and expenses associated with: small arms training for all regular and reserve Coast Guard members, competitive gunnery and small arms shooting programs, ordnance program compliance inspections and oversight.

bp. TD and TAD travel expenses, tuition, books and related costs for military and civilian personnel attending training with the exception of professional certifications and training which is funded by COMDT through separate HQ allocations, such as service wide class "C", tuition assistance, and advanced education. A list of courses, which shall not be funded by AFC-30, can be found in the Class Convening Schedule For Coast Guard Class "A" and "C" Resident, and Exportable Training Courses, COMDTNOTE 1540 and on the Training Quota Management's web site.

bq. Non-recurring shore maintenance, repairs, and in-kind replacements, and alterations of real property facilities under $5,000 (if project costs exceed this it shall be funded with AFC-43).

2. Not Chargeable to AFC-30

a. TD and TAD travel expenses for AFC-41, 42, 43, and 45 project related travel.

Encl 2-4
AFC-30 Operating and Maintenance/ CG-83
(Continued)

b. Travel expenses or tuition for military and civilian personnel attending Service-wide Class "C" training. A list of courses, which shall not be funded by AFC-30, can be found in the Class Convening Schedule For Coast Guard Class "A" and "C" Resident, and Exportable Training Courses, COMDTNOTE 1540 and on the Training Quota Management's web site. All travel expenses, tuition, books and related cost for which funding is otherwise provided by COMDT through AFC-56 or AFC-30 "T".

c. All travel expenses, tuition, books and related cost for which funding is otherwise provided by COMDT through AFC-56 or AFC-30 "T". This includes tuition assistance and advanced education.

d. TD and TAD travel expenses, tuition, books and related cost for military and civilian personnel attending training for professional certifications (i.e. Bar exam, PDH, or CEU requirements). See Comp. Gen. Decisions B-185341 and B-187525.

e. TD and TAD travel expenses of personnel on assignment, or connected with work, which will be reimbursed by another appropriation or government agency.

f. TD and TAD travel expenses of personnel assigned to G-WTR performing duty in connection with the Reserve Training Program (RT appropriation).

g. TD and TAD travel expenses of personnel performing duty in connection with AC&I, RDT&E or EC&R projects. (AC&I, RDT&E, or EC&R appropriations).

h. Medical and dental supplies/consumables, equipment maintenance and equipment with an acquisition cost of $500 or more in support of Coast Guard clinics

i. Wage grade overtime related to AFC-41, 42, 43, and 45 projects.

Encl 2-4.1
AFC-30 ”T” Training

Travel, per diem and tuition for formal training intended for field execution of training, which is not approved nor funded through the Class Convening Schedule For Coast Guard Class “A” and “C” Resident, and Exportable Training Courses, COMDTNOTE 1540. AFC-30”T” is AFC-56 which has been converted to AFC-30 to facilitate further transfer to the field and Headquarters units.

1. Chargeable Expenses

   a. Travel and per diem for civilian and military personnel, reserve members on Active Duty (AD) or Extended Active Duty (EAD), and Auxiliary.

   b. Tuition and course material for TAD training.

   c. TD and TAD travel expenses, tuition, books and related costs for military and civilian personnel attending training with the exception of professional certifications and training which is funded by COMDT though separate Headquarter allocations, such as Service-wide class “C”, tuition assistance, and advanced education. A list of courses, which shall not be funded by AFC-30, can be found in the Class Convening Schedule For Coast Guard Class “A” and “C” Resident, and Exportable Training Courses, COMDTNOTE 1540 and on the Training Quota Management’s web site.

2. Expenses Not Chargeable to AFC-30

   a. Field AFC-30 ”T” training funds shall not be used to obtain training which is approved and funded in the Class Convening Schedule For Coast Guard Class “A” and “C” Resident, and Exportable Training Courses, COMDTNOTE 1540, including formal courses, exportable (road show), resident, commercial and other government sources. Refer to the Class Convening Schedule For Coast Guard Class “A” and “C” Resident, and Exportable Training Courses, COMDTNOTE 1540 to identify all courses that are approved as Class “C” and which cannot be funded with these funds. Pending final outcome of the travel decision.

Encl 2-4.1
AFC-30 ”T” Training
(Continued)

b. Training aids, services, supplies and equipment.

c. Printing of training publications and manuals or production of training films, videos, etc.

d. Travel and per diem for training of more than 20 weeks duration.

Encl 2-4.2
AFC-30 “C” Compliance

AFC-30 “C” includes activities funded with unit level AFC-30 funds and previously funded EC&R Compliance activities. To eliminate concerns on funding environmental compliance activities from both OE and EC&R, the day-to-day compliance activities have been transferred from the EC&R, including 30 civil engineering compliance billets. This transfer accounts for the activities that have been and continue to be supported by the civil engineering program.

Costs associated with the development of policy and procedures to address compliance activities generated by units in the course of day-to-day operations to ensure compliance with all federal, state, and local environmental laws, regulations, and requirements.

Expenses include all administrative costs to accomplish the compliance activity and to establish internal processes and controls to ensure compliance.

1. Chargeable Expenses

   a. Administrative costs to accomplish compliance activity include surveys, unit specific plans, internal and external reporting requirements, inspections, permits and fees, travel material and supplies, and printing.

   b. Activities that require a facility to establish internal processes and controls that are incorporated into the daily activities of operating the facility to ensure environmental compliance. These activities include the following:

      - Air Emissions Management
      - Cultural Resource Management
      - Hazardous Materials Management

Encl 2-4.2
AFC-30 "C"
Compliance (Continued)

- Hazardous Waste Management
- Natural Resources Management
- Pollution Prevention and Waste Minimization
- Environmental noise
- Pesticide Management
- Petroleum, Oil, and Lubricant (POL) Management
- Solid Waste Management
- Storage Tanks Management
- Wastewater Management
- Water Quality Management
- Environmental Compliance Evaluations (ECE)
- Environmental Management Systems (EMS)

c. Plans and permits not requiring a professional engineer approval and/or signature.

Encl 2-5
AFC-38 Industrial Support Activity Revolving Fund/ G- SLP

All travel, material and applicable labor cost transactions involved in completing an Industrial Service Order (ISO).

1. Chargeable Expenses

   a. Transactions for AFC-30 and AFC-4X funded ISOs, include all travel, material, and wage board direct overtime labor costs.

   b. Transactions for AFC-77, AC&I, and EC&R funded ISOs, include all travel, material; all wage board direct labor costs and a share of the industrial support activity's overhead expenses, including indirect labor.

2. Expenses Not Chargeable Directly to AFC-38

   a. Funds not obligated via an approved ISO.

   b. Units not designated as Industrial Support Activities are not authorized to charge to AFC-38. These activities are designated in the Industrial Management Manual, COMDTINST M5240.l (series).

Encl 2-6 **AFC-40 Chief of Staff Administrative/ CG-83**	Funds for transfer to other control accounts for projects or expenses approved by G-CCS.

Encl 2-7
AFC-41 Aeronautical Engineering/G-SEA

General expenses incurred in the aviation program.

1. Chargeable Expenses

   a. Materials, services, and supplies necessary for the modification, repair and intermediate or depot level maintenance and other depot level logistics support of aircraft and aircraft equipment including avionics.

   b. Issuance of AFC-41 field stock inventory and inventory turn-ins as specified in Coast Guard-298.

   c. Aeronautical engineering contractual services (e.g., technical services).

   d. Transportation costs for the shipment of aircraft, or aeronautical material/equipment procured with AFC-41.

   e. Procurement of aircraft ground handling and support equipment.

   f. Depot level maintenance expenses incurred in support of the Naval Engineering Logistics Support Program.

   g. All direct, indirect and overhead costs, not chargeable to another category, associated with aircraft depot level logistics support. Training and associated travel required to acquire or retain knowledge/skill necessary for and authorized billet or position at ARSC is considered a direct overhead cost.

   h. Type III and V aeronautical material and consumable supplies when directly associated with AFC-41 funded depot level logistics support.

   i. Calibration and minor repair of equipment and special tools directly associated with AFC-41 funded depot level logistics support.

Encl 2-7
AFC-41 Aeronautical Engineering/G-SEA
(Continued)

j. Repair and maintenance of ground support equipment required for AFC-41 funded depot level aircraft maintenance.

k. Interest penalties for AFC-41 funded goods/services.

2. Expenses Not Chargeable to AFC-41

a. Civilian payroll, and wage grade expenses in support of the AFC-41 Depot Level Logistics Support Program.

b. Type III and V aeronautical material and consumable supplies not directly associated with AFC-41 depot level logistics (AFC-30).

c. Local service contracts for calibration and minor repair of equipment and special tools not directly associated with AFC-41 funded depot level logistics support (AFC-30).

d. Repair and maintenance of ground support equipment except equipment required for AFC-41 funded depot level aircraft maintenance (AFC-30).

e. Purchase and restoration of flight clothing and survival equipment (AFC-30).

f. Costs of deployable rescue equipment, shelving and rescue equipment other than for flight crew survival (AFC-30).

g. Repair of private auxiliary aircraft, damaged while operating under Coast Guard orders, or reimbursement to Auxiliarists for such repairs (AFC-30).

Encl 2-7
AFC-41 Aeronautical Engineering/G-SEA
(Continued)

h. Expenses incident to seized aircrafts and cost of all aircraft landing fees (AFC-30).

i. Costs of ground and ship-based electronics equipment including communications equipment and ATON used to support aircraft operations (AFC-42/30).

Encl 2-8
AFC-42 Command, Control, Communications and Electronics/CG-64

Procurement, replacement, installation, major maintenance and system support expenses of standard electronic navigation, command and control (C^2) and communications systems.

1. Chargeable Expenses

   a. Procurement, replacement, installation, major maintenance, and system support of standard electronic navigation systems. This includes support of electronic components of transmitting systems, receivers, and monitor systems. The electronic components include cabling and/or wireless communication equipment that is an integral part of the system, and associated computer hardware and software. These systems are those contained in the Federal Radionavigation Plan (e.g., LORAN, Differential Global Positioning System, etc.).

   b. Procurement, replacement, installation (including start-up costs), major maintenance, and support for standard command and control (C^2) systems on boats, cutters, and shore facilities. This includes cabling and/or wireless communication equipment that is an integral part of the system. Examples of these systems are radar integrated C^2 systems such as SCCS, VTS and radar systems.

   c. Procurement, replacement, installation (including start-up costs), major maintenance, and support of standard communications systems. This includes installed cabling and/or wireless communication equipment that is an integral part of the system and associated computer hardware and software. These systems include data communications systems private branch exchanges (PBX), telephone switch equipment, video and (SI) teleconferencing, and radio communications systems.

Encl 2-8
AFC-42 Command, Control, Communications and Electronics/CG-64
(Continued)

d. Procurement, replacement, and installation, of all nonstructural antennas for radio transmission purposes (e.g., VHF, HF). This includes all communications antennas and all non-ordnance surface and air search radar antennas. This does not include antennas for MWR purposes, such as television satellite dish antennas, which may be authorized with AFC-30 funds.

e. TD and TAD expenses in direct support of AFC-42 Depot Level Logistics Support Program.

f. Transportation costs of material and equipment procured with AFC-42.

g. Interest penalties for AFC-42 goods/services.

2. Expenses Not Chargeable to AFC-42

a. Procurement, replacement, installation, maintenance, and support of nonstandard electronics equipment. (This does not preclude using AFC-42 funds for procuring nonstandard equipment needed to support a specific AFC-42 project, for example to purchase prototype equipment to plan a system replacement).

b. Procurement, installation, and maintenance of general purpose, office automation hardware and software, which are not an integral part of an AFC-42 supported system.

c. Procurement, replacement, installation, maintenance, and support of nonstandard computer hardware and software. (This does not preclude using AFC-42 funds for procuring nonstandard hardware and software needed to support a specific AFC-42 project).

d. Leased communications circuits (AFC-30).

e. Electronics systems for MWR use (AFC-30, NAF).

Encl 2-8
AFC-42 Command, Control, Communications and Electronics/CG-64
(Continued)

f. Modifications to shore facilities and vessel structures necessary to accommodate the installation of electronic equipment. This includes items such as conduit, cable pathways, bulkhead penetration, foundations for equipment and antennas, etc. "Major modifications" include modifications, which meet the AFC-43 threshold, or are defined as AFC-45 program manager expenses in the cutter class maintenance plans. (AFC-43 and AFC-45).

g. Routine services, supplies and materials, including transportation costs, used for minor electronic maintenance, and repairs (AFC-30).

h. Procurement, installation and maintenance of towers and structural antennas (e.g., supporting structural platforms, energized guyed towers with ground systems, etc.).

i. Procurement, installation, and major maintenance of computer systems that are an integral part of facilities or systems. Shore facility examples are fire detection and environmental control systems that are part of a structure. Shipboard examples include cabling that is part of an AFC-45 supported systems such as the gyro or IC system.

j. Routine minor maintenance and OEs for computer systems that are an integral part of facilities or systems (AFC-30).

k. Administrative TD and TAD expenses not specifically related to an AFC-42 project Depot Level Logistics Support Program (AFC-30).

Encl 2-8.a Definitions - Standard Equipment and Systems	Standard equipment and enterprise systems are defined as those fielded with a Commandant approved Electronic Integrated Logistic Support Plan (EILSP) and for which recurring support has been provided through the AFC-42 Program.
Encl 2-8.b Major Maintenance	Major Maintenance includes depot level maintenance, overhauls and other maintenance, which exceeds unit capability.
Encl 2-8.c Minor Maintenance	Minor maintenance includes Coast Guard PMS and corrective maintenance within the unit's capability.
Encl 2-8.d Cabling	Cabling includes signal-carrying twisted-pair wires, coaxial cable, fiber-optic cable, and waveguides.

Encl 2-9
AFC-43 Civil Engineering/ G-SEC

Depot level maintenance expenses incurred is support of the civil engineering logistics support program.

The Civil Engineering logistics support program is responsible for non-recurring major maintenance repair and rebuilding of real property facilities within the Coast Guard to ensure attainment of the maximum service life and its intended purpose. This includes expenses associated with the program that has a unit cost over $5,000, unless otherwise noted. This excludes expenses that may include a level of minor improvements (below the AC&I threshold) to accomplish an objective.

1. Chargeable Expenses

   a. Maintenance and repair work to minimize deterioration, avoid service failures (utility system repairs, roof replacements, paving, and structural inspections), higher long-term maintenance costs and loss of design useful life.

   b. Maintenance and repair to address health and safety discrepancies.

   c. Maintenance and scheduled dredging at Coast Guard owned facilities.

   d. Building retrofits resulting from technological advances, seismic reinforcements, Uniformed Federal Accessibility Standards, etc.

   e. Replacement of an element within a real property facility of comparable capacity and capability.

   f. Restoration of a real property facility to a condition that ensures the facility reaches the end of its useful life.

   g. Demolition or removal of a portion or all of a real property facility.

Encl 2-9
AFC-43 Civil Engineering/ G-SEC
(Continued)

h. Procurement of ATON piles and towers.

i. Procurement of new Coast Guard wide short range ATON hardware and spare parts for modernization (unit cost may fall under the $5,000 threshold).

j. Procurement of prototype ATON hardware or new commercially available short range ATON hardware for field-tests not within the RDT&E appropriation.

k. Procurement, installation, and maintenance of towers and structural antennas (e.g., supporting structural platforms, energized guyed towers with ground plane systems, etc.).

l. A&E design work associated with an AFC-43 project.

m. Maintenance, repairs, replacement, and upgrades of underground storage tanks (USTs) except when work is required solely to meet environmental regulations.

n. Civil engineering projects at government facilities housing CGES are limited to:

1. Correcting a safety related code deficiency or a handicap-access requirement except when resulting from a CGES change of use for space.

2. Maintaining structural integrity, building envelope, building wide utility systems, and supporting infrastructure except for CGES facilities constructed or procured with non-appropriated funds.

3. Civil engineering projects (not related to a CGES initiative) involving a government facility partially occupied by a CGES tenant, may include work to restore the area to pre-construction condition when the non-CGES project affects the occupied space.

Encl 2-9
AFC-43 Civil Engineering/ G-SEC
(Continued)

o. Transportation costs of material and equipment procured with AFC-43.

p. TD and TAD expenses in direct support of AFC-43 projects.

q. Interest penalties for AFC-43 materials and services.

r. Procurement, maintenance, and repair of equipment required for AFC-43 shore facility maintenance activities.

2. Expenses Not Chargeable to AFC-43

a. Service, supplies and materials used for routine recurring repairs and maintenance of shore structures and facilities with project cost less than or equal to $5,000 (AFC-30).

b. All furnishings and office labor saving devices regardless of cost (AFC-30).

c. Rental expenses of passenger vehicles, trucks and other transportation equipment (AFC-30).

d. Claims against the Coast Guard for loss or damage to GSA vehicles (AFC-30).

e. Buoy-related expenses related to procurement, outfitting, installation, and maintenance (including costs of chain and sinkers). Consumable materials for installation, maintenance and repair of fixed ATON structures, including day board fabrication ATON signal equipment, solar panels, and primary and secondary batteries, (but not including piles and towers used by ATON Teams or Construction/Buoy Tenders) (AFC-30).

Encl 2-9
AFC-43 Civil Engineering/ G-SEC
(Continued)

f. Replacement, cleaning and repair and modification of MEP response equipment, spare parts, and consumables are charged only to AFC-30, if not qualified to be recovered from the responsible party or the oil pollution fund. MEP equipment procurement, replacement and repair are charged to AFC-30 when used for government facility and government vessel pollution response or pollution readiness under "GPA-90" legislation.

g. Environmental cleanup or restoration projects shall be funded from the EC&R appropriation (See chapter 5 of this Manual).

h. Procurement and installation of non-structural antennas (AFC-30).

i. Procurement and installation of cabling that connects Coast Guard purchased telecommunications equipment with other Coast Guard purchased telecommunications equipment (e.g., computers, phones, PA systems). Procurement and installation of cable television systems. Any work on leased antennas (AFC-30).

j. Any non-salary direct costs (e.g., A/E fees, travel, printing, mailing of bid packages), associated with the design/construction of a CGES project, unless as previously allowed as defined.

k. CCTV systems, and other non-fire detection/suppression systems, that send signals of threats to contents/mission of a particular space (e.g., disbursing space alarm, hangar deck motion sensors) that are not integral components of a shore facility driven by building codes or required for utilities supporting general occupancy.

l. Procurement and maintenance of vehicles in support of operations shall be AFC-30 funded. This includes all passenger vehicles and trucks supporting operations unless required for shore facility maintenance activities.

Encl 2-9
AFC-43 Civil Engineering/ G-SEC
(Continued)

m. Routine preventive maintenance and base operation services to real property facilities which include but are not limited to: interior decorating activities (i.e., carpeting, interior painting, and window treatments, except when work is performed in conjunction with an AFC-43 major renovation project); snow removal; routine/recurring lawn and gardening services; janitorial services; food services; pest control services; etc (AFC-30).

n. Administrative TD and TAD expense not specifically related to an AFC-43 Depot Level Logistics Support Program (AFC-30).

o. Procurement maintenance and repair of equipment in support of operations shall be AFC-30 funded, unless required for shore facility maintenance activities.

Encl 2-9.1
Real Property Facility

A real property facility includes buildings, structures, grounds, roads, runways, utilities, piers, fixed ATON (ashore and offshore); major non-consumable equipment used to support the shore maintenance plant (e.g., generators, compressors, concrete mixtures, truck cranes); underground storage tanks; non-consumable ATON equipment in lighthouses and lighted ranges (light and sound signals, and power systems); Coast Guard-owned housing; MWR facilities, CGES facilities; and the purchase of non-GSA vehicles to support the maintenance of the shore plant, such as trucks and special purpose motorized equipment (i.e. cranes, fire trucks, lifts, etc.).

Encl. 2-9.1.a
Major Maintenance

Major Maintenance includes depot level maintenance, overhauls and other maintenance, which exceeds unit capability.

Encl. 2-9.1.b
Minor Maintenance

Minor maintenance includes Coast Guard PMS and corrective maintenance within the unit's capability.

Encl 2-10
AFC-45 Naval Engineering/ G-SEN

General expenses related to inventory, repair, alteration, modification, engineering design services in support of naval engineering.

1. Chargeable Expenses

   a. Travel expenses of military members from shipyard to homeport and return as authorized in 37 U.S.C. 406b.

   b. TD and TAD expenses in direct support of AFC-45 projects.

   c. Hull Mechanical and Electrical (HM&E) engineering change requests to standard boats (ECRs) in excess of $500 per boat.

   d. General engineering design and contractual services related to vessels, floating dry docks, barges, and houseboats.

   e. Procurement of major equipment used for maintenance, repair, and alteration of vessels, barges, houseboats, and floating dry docks that also includes propulsion, ordnance systems, and equipment and systems such as generators, fire fighting systems and equipment, damage control systems, and equipment, etc.

   f. Services, supplies and major equipment for the installation, alteration, modification and overhaul of ordnance systems on board cutters.

   g. Materials and services in response to casualty reports (CASREPS) in excess of the prescribed cutoff level.

   h. Maintenance delineated in the appropriate Cutter Class Maintenance Plans (CCMPs) as promulgated by the responsible MLC.

   i. Restoration and repair of standard support level (SSL) boats resulting from fire, flooding, collision, and grounding.

Encl 2-10
AFC-45 - Naval Engineering/ G-SEN
(Continued)

j. Contract messing and berthing costs for eligible crewmembers displaced from their vessel due to repair or rehabilitation during vessel availability.

k. Interest payments for AFC-45 goods/services.

2. Expenses Not Chargeable to AFC-45

a. Routine unit level services, supplies and materials for repair, maintenance and operation of cutters and small boats as delineated by the appropriate CCMPs and/or CASREP levels (AFC-30).

b. TAD travel expenses in connection with maintenance of boat buildings (AFC-30).

c. Administrative and TAD expenses not specifically related to an AFC-45 Depot Level Logistics Support Program (AFC-30).

d. Transportation expenses of small boats including shipment or trans-shipment of fuel, material and equipment to Coast Guard floating units as well as shipment from floating units (AFC-30).

e. Expenses incident to seized vessels (AFC-30).

f. HM&E alterations and modifications, less than $500, to standard support level (SSL) boats (AFC-30).

g. All items required initially to complete the hull allowances of new boats, barges and houseboats (AFC-30).

h. Procurement, installation, overhauls, replacement of electronic equipment on vessels, floating dry docks, barges, and houseboats (AFC-30, AFC-42).

i. Procurement of vessels, floating dry docks, boat trailers, barges, and houseboats (AC&I, AFC-30).

Encl 2-10.1
G-SEN Oversight

a. G-SEN will ensure that the CASREP cutoff levels and CCMPs within the same cutter class are identical between the two MLCs.

b. Any fund source changes to the CASREP cutoff levels or the CCMPs shall be made with the concurrence of G-SEN and the AFC-30 funds manager, Office of Financial Management (CG-83).

Encl 2-11
AFC-56 Training/
G-WTT

Travel and per diem for formal training performed as TAD, and tuition for such training. This includes funding for:

a. Accession training, e.g., Officer Candidate School (OCS), Direct Commission Officer (DCO), "A" School, and recruit training for Coast Guard officers to become aviators.

b. Advanced education, i.e., full time tuition and associated travel costs.

c. Tuition assistance, i.e., partial reimbursement of tuition costs for off-duty education.

d. Class "C" training including funding for services wide advanced specialized training.

1. Chargeable Expenses

a. Travel and per diem for civilian and military personnel, reserve members on AD or EAD and Auxiliarists.

b. Tuition and course material for TAD training. (Books and material required for course completion are authorized for enlisted members).

c. Specified fees for advance education.

2. Expenses Not Chargeable to AFC-56

a. Training aids, services, supplies and equipment.

b. Printing of training publications and manuals or production of training films, videos, etc.

c. Conferences, seminars and symposiums (AFC-30).

Encl 2-11
AFC-56 Training/
G-WTT (Continued)

d. Travel and per diem for schools of more than 20 weeks duration.

e. Books, some fees, thesis preparation supplies, course materials and any other non-tuition items are not authorized for officers or civilians in the Advanced Education Program (See G-WTT for a complete listing of authorized fees).

Encl 2-11.a
Major Maintenance

Major Maintenance includes depot level maintenance, overhauls and other maintenance, which exceeds unit capability.

Encl 2-11.b
Minor Maintenance

Minor maintenance includes Coast Guard PMS and corrective maintenance within the unit's capability.

Encl 2-12
AFC-57 Medical/
G-WRP

General expenses to support health care of military members and their dependents.

1. Chargeable Expenses

   a. Medical, dental, laboratory, and pharmaceutical equipment and supplies specifically used to support the health care program at Coast Guard.

   b. Federal and non-federal medical and dental services provided to authorized beneficiaries.

   c. MLC procurement of medical, dental and laboratory equipment with a line cost of $1501.00 or greater for Coast Guard clinics with $501.00 or greater for Coast Guard sickbays.

   d. Clinic procurement of medical, dental, and laboratory equipment with a line item cost of $1500.00 or less, and $500.00 or less for Coast Guard sickbays.

   e. Maintenance and repair of equipment purchased with AFC-57 funds.

   f. Transportation of supplies and equipment purchased with AFC-57 funds.

   g. Procurement of medical and dental reference materials authorized by the Health Services Allowance Lists, and patient preventive medicine educational pamphlets.

   h. Mental health assessments to determine clinical diagnosis, screening, intervention and counseling services related to family violence intervention in accordance with Family Advocacy Program, COMDTINST 1750.7 (series), and Management of Family Advocacy and Special Needs Cases, COMDTINST 1754.12 (series). All other counseling services will be funded out of AFC-30.

Encl 2-12
AFC-57 Medical/ G-WRP
(Continued)

2. Expenses Not Chargeable to AFC-57

   a. Services, supplies and equipment for administrative or operational support (e.g., building maintenance and repair, utilities, laundry, housekeeping and administrative supplies, etc.) of the health care program (AFC-30).

   b. Furnishing, fixtures and equipment (e.g., waiting room and office furniture, wall hanging, office labor saving devices, ADP equipment, etc.) (AFC-30).

   c. Travel and transportation cost for Coast Guard members to receive medical and dental healthcare (AFC-30).

Encl 2-13
AFC -72 Retired Pay/G-WPM

Payroll expenditures for retired pay military members of the Coast Guard.

1. Chargeable Expenses

   a. Retired Pay

   b. Survivor Benefits

   c. Limited income for widows

   d. Transfer fund from AFC-72 to AFC-73 to pay for medical expenditures for Coast Guard retirees.

2. Redistributed Cost

   a. Funds can be transferred from AFC-72 to AFC-73 to pay for medical expenditures for Coast Guard retirees.

   b. Funds can be transferred from AFC-73 to AFC-57 to cover medical care expenditures for Coast Guard retirees, retired dependents, survivors, and widows received at Coast Guard.

Encl 2-14
AFC -73 Retired Medical/G-WKH

Medical care expenditures for Coast Guard retirees, widows, and survivors entitled to medical care.

1. Chargeable Expenses

   a. Payment of DOD Military Treatment Facility bills for treatment of Coast Guard related beneficiaries.

   b. Payment of TRICARE charges for treatment of Coast Guard retired beneficiaries.

   c. Payment of eyewear fabrication for Coast Guard retirees.

   d. Payment of medical care expenses for retired members from the former Light House Service.

2. Redistributed Costs

   a. Funds can be transferred from AFC-73 to AFC-72 to pay for payroll expenses for Coast Guard retirees.

   b. Funds can be transferred from AFC-73 to AFC-57 to cover medical care expenditures for Coast Guard retirees, retired dependents, survivors, and widows.

Encl 2-15
AFC-75
Reimbursements/Fund Programs

This AFC is a "contra" reimbursable account. It allows tracking of reimbursable obligations and is administered by CG-83. No funds are executed within AFC-75 and no program element is permitted to carry a negative balance.

Encl 2-16 AFC-77, AFC-80, AFC-88 Reimbursable

AFC - 77 Reimbursable Field Execution Accounts

Funds O&M purchases made at ATU and field level with Headquarters (CG-83) managed reimbursable budget authority.

Created in FY99, AFC 77 includes all Headquarters reimbursable O&M funds that were previously distributed to AFC-30 and AFC-4X. The former practice caused reimbursable funds to be mixed with appropriated funds, making it difficult to separate reimbursable funds for enforcement of travel ceilings, obligation targets, and reprogramming guidelines. O&M (AFC-30 & AFC-4X) purchases made with Headquarters reimbursable funds can be made from AFC-77, through the use of agreements established by ATUs or field units.

Encl 2-16.a AFC-77 General Guidance

AFC-77 accounts will generally be used at the ATU level and above. The only exceptions are ATUs that are inventory control points not using Finance and Procurement Desktop (FPD) and Coast Guard Oracles Financial (CGOF) and field units tasked with executing reimbursable funds on a regular basis. ATUs that receive Headquarters reimbursable funds should have their authorized budget officer contact the Finance Center (FINCEN) to establish new AFC-77 program elements. Reimbursable funds distributed to AFC-77 should be obligated and expended from AFC-77 to the greatest extent possible. However, ATUs are authorized to transfer or variance AFC-77 reimbursable funds into field unit's AFC-30 or AFC-4X accounts. This should only be done for field units for whom the management of an additional program element would provide a substantial workload. There may be other instances where the former practice of distributing the funds to AFC-30 and AFC-4X will still be necessary. ATUs should notify the appropriate AFC program manager to gain authorization before proceeding with these types of transactions.

Encl 2-16.b AFC-77 Funds Transfer Authorization (FTA)/Change in Financial Plan (CIFP) Policy

Any changes from the initial OPSTAGE AFC-77 distributions require an FTA or CIFP as follows: FTAs will be used whenever a Headquarters program, ATU or field unit transfers AFC-77 funds to another Headquarters program, ATU or field unit AFC-77 account.

Encl 2-16.c AFC-77 Accounting Control

CG-83 will closely monitor the transfer and execution of all AFC-77 reimbursable funds. Since these funds are being received and executed under the authority of the Economy Act, it is vital that they are tracked and executed for their intended purpose and within the appropriate time frame. AFC-77 funds may not be used to augment a Headquarters program, ATU, or field unit normal O&M AFC-30 and AFC-4X accounts for purposes outside those specifically stipulated by the originator in the Military Interservice Purchase Report (MIPR), reimbursable agreement, Memo of Understanding (MOU) or Memo of Agreement (MOA). CG-83 will review and approve all CIFPs requesting the transfer of AFC-77 funds to other AFCs. AFC-77 one-year funds expire at the close of the fiscal year and are no longer available for new obligations. Prior to the close of the fiscal year, Headquarters program managers and ATUs may recover AFC-77 multi-year/no-year funds for carryover into the next fiscal year.

Encl 2-16.d AFC-80 Reimbursements

General account used for establishing and identifying reimbursable agreements. The sole purpose of AFC-80 is to accept funds in the Coast Guard accounting system for reimbursable work for other government agencies and non-government entities in accordance with specific legislative authority. AFC-80 is managed and controlled by CG-83.

Encl 2-17
AFC-90, AFC-94, AFC-97, AFC-98
AFC-90 Reserve Training Program Expense/G-WTR

1. Chargeable Expenses – AFC-90

   a. Drill program support, including regularly scheduled IDT, and Readiness Management Periods (RMP).

   b. Continuing training, including active duty for training that satisfies the annual training requirement (ADT-AT) and other training duty (ADT-OTD). OTD is defined as training that will lead to qualification, certification, or other structured formal training.

   c. Active duty other than training, including active duty for special work in support of the reserve component (ADSW-RC).

   d. Maritime Academy Reserve Training (MARTP) trainees. G-M reimburses these costs to RT annually.

   e. Administrative costs in direct support of the reserve program.

   f. Reserve personnel organizational clothing, personal safety and protective gear, and personal-issue gear.

   g. Training costs for Reserve – unique items (e.g. development PS3 correspondence course).

   h. Recruiting costs for Reserve – unique items for recruiting (e.g., posters or Reserve pamphlets).

2. Expenses Not Chargeable To Reserve Training Accounts

   a. Active Duty Special Work in support of the Active Component (ADSW-AC). (Old Temac)

   b. Extended Active Duty (EAD)

   c. Unit equipment or OE funds.

Encl 2-17.a AFC-94 Reserve Reimbursable Program

1. Chargeable Expenses

   a. Pay and allowances for reservists performing drills (IDT), annual training (ADT-AT), or active duty special work (ADSW-RC) for Selective Services System, DOD or other agencies.

Encl 2-17.b AFC-97 Reserve Refund Program

1. Chargeable Expenses

   a. Personnel Support Costs - Reserve (PSCR) Adjusted SPC is provided for selective reserves drilling at active duty commands to offset integration.

   b. Long-term active duty for special work in support of the reserve program (ADSW-RC). Pay and allowances for reserve personnel on active duty more than 139 days funded to AFC-01.

Encl 2-17.c AFC-98 Civilian Pay Reserve/CG-83

1. Chargeable expenses

   a. Charges for civilian pay for personnel assigned to Reserve Training funded positions

This page intentionally left blank.

3.A Good Stewardship

Responsibility for the administration and control of funds exists at almost every level in the Coast Guard. At the top of the organization, a flag officer at Headquarters may be responsible for controlling entire appropriations involving billions of dollars. At the unit level, a seaman apprentice gets involved with funds control every time he or she completes a travel claim. The key ingredient that links all levels of the organization and the basic principle underlying all financial management policy are stewardship of public funds. In simple terms, this means using public funds only for purposes authorized by law and in accordance with those laws, rules, and regulations. Further, it means all personnel should exercise the same care and diligence in using public funds as they do when using their own personal funds. Finally, our use of funds must always reflect favorably on the Coast Guard when closely scrutinized; e.g., if your funding decisions were detailed and analyzed on CNN or the front page of the Washington Post or any other newspaper would your work reflect well on the Coast Guard?

3.B Authority for Control of Funds

This section identifies officers authorized to administer and control funds, and establishes responsibility for ensuring obligations against each appropriation is restricted to the amounts authorized.

3.B.1 Budget Authority

Budget authority for any fiscal year represents the authority to incur obligations granted by the prior or current year action of Congress. Most budget authority is in the form of appropriations.

3.B.1.a OMB Action

Once Congress enacts appropriations, OMB establishes time schedules for executing the budget. OMB apportions funds by quarter for most appropriations. The Coast Guard must establish plans to ensure that obligations do not exceed these apportionments. CG-83 establishes each year's plan to remain within apportionments.

3.B.2 Funds Control

In accordance with OMB Circular A-11 revised, and Section 1514 of Title 31, U.S.C. and Title 49 Code of Federal Regulations, the Secretary of Homeland Security is responsible for prescribing a system of administrative control of funds.

3.B.2
Funds Control
(Continued)

The Secretary has delegated to the Commandant the authority to establish and maintain a system of fund control in accordance with the criteria and policies set forth in Department of Homeland Security Delegation, Number 0160.

3.B.2.a
Commandant's Budgetary Responsibilities

As the head of the Coast Guard, the Commandant sets the tone for the stewardship of public funds throughout the organization. Specific responsibilities include:

1. Requesting and obtaining funds through the budgetary process and ensuring the efficient and effective expenditure of those funds in the performance of the duties of the service.

2. Developing formal operating financial plans related to enacted appropriations.

3. Making formal requests to OMB for the apportionment of appropriations, and for reapportionment when necessary.

4. Submitting prescribed reports on the management and status of appropriations.

5. Providing formal administrative procedures to ensure obligations and expenditures do not exceed the funds apportioned for any quarter (plus any un-obligated funds carried-over from the previous quarter or year).

6. Ensuring any significant deviations from the operating and financial plans are justified and that Congressional reprogramming guidelines are followed.

7. Initiating appropriate corrective action when infractions of prescribed procedures occur.

8. Delegating authority for the administration and control of funds within the limits of general instructions governing the administration of funds.

9. Reporting to the Secretary any violation of the Anti-Deficiency Act.

3.B.3 Delegation of Commandant's Authority

Delegation of authority and responsibility for the administration and control of funds is addressed in the United States Coast Guard Regulations 1992, COMDTINST M5000.3 (series), The Coast Guard Organization Manual, COMDTINST M5400.7 (series), and this Manual. These publications supplement statutory provisions and regulations issued by OMB, GAO, and DHS.

3.C Headquarters Staff

The Commandant has delegated the responsibility of specific functions in the management and control of appropriated funds as follows.

3.C.1 Chief of Staff (G-CCS)

G-CCS assists the Commandant in the allocation of resources to Coast Guard programs and functional areas and monitors the execution of approved financial plans. When major changes in plans are required, G-CCS will present recommendations to the Commandant to reallocate resources as necessary. G-CCS also establishes the system for administration and control of funds by designation of appropriation managers and other delegations of authority as specified in this Manual.

3.C.2 Director of Finance and Procurement (CG-8)

CG-8 is the Chief Financial Officer (CFO) of the Coast Guard and Support Director for the Financial Management Program. Specific responsibilities include:

a. Providing policy and direction for financial management personnel, programs, systems, activities, operations, and reporting.

b. Ensuring effective implementation of departmental and Coast Guard financial management policy, procedures, and internal controls.

c. Representing the Coast Guard as a member of the CFO Council.

3.C.2 Director of Finance and Procurement (CG-8) (Continued)

d. Reporting to the Departmental CFO, as appropriate, on financial management matters.

e. Directing financial analysis procedures of business analysis in support of the Planning, Programming, Budgeting and Evaluation System, while coordinating closely with Director of Resources (CG-8).

f. Overseeing the development and use of financial performance indicators to support evaluation of the Coast Guard's financial business.

3.C.3 Director of Resources (CG-8)

CG-8 is responsible for the development of budget estimates reflecting the financial requirements of the Coast Guard and for assisting G-CCS and the Commandant in the presentation of such estimates to the DHS, OMB, and Congress. CG-8 is responsible to G-CCS for the overall execution of the approved budget.

3.C.4 Appropriation Managers

The Commandant has delegated responsibility for management of appropriations through G-CCS to designated Headquarters Assistant Commandants, the Superintendent of the Coast Guard Academy, and commanding officers of Headquarters units. While G-CCS exercises overall appropriations management responsibilities, appropriation managers are delegated authority for the day-to-day management of all funds in their appropriation and within the approved OPSTAGE financial plan. G-CCS approval is required for any major (policy) changes from the OPSTAGE financial plan.

The Appropriation Manager's responsibilities include:

a. Determining funding appropriated by Congress or available from reimbursable agreements.

b. Coordinating funding distributions between Operating and Support Program Directors.

c. Developing apportionment schedules for submission to OMB. Developing secondary financial plans for orderly and systematic execution of the approved financial plan and apportionment.

3.C.4 Appropriation Managers (Continued)

d. Ensuring reimbursable agreements are properly executed and costs are recovered.

e. Monitoring changes in the OPSTAGE financial plan.

f. Monitoring obligations to ensure compliance with the apportionment schedule approved by OMB.

g. Balancing resources to adjust for surpluses/shortfalls in respective appropriation or AFCs.

h. Evaluating actual CGOF closeout results against the Project/AFC manager's closeout projections. Taking corrective action where necessary.

i. Managing funds that have expired for obligation purposes.

The following table outlines each normal appropriation as well as the designated fund manager

Appropriation	**Fund Manager**
Operating Expense (OE)	CG-8
Acquisition, Construction and Improvements (AC&I)	CG-8
Research, Development, Testing & Evaluation (RDT&E)	CG-6
Environmental Compliance and Restoration (EC&R)	G-S
Alteration of Bridges	G-O
Reserve Training (RT)	G-WTR
Retired Pay (RP)	G-WRP
Supply Fund	CG-842
Gift Fund	CG-8
Yard Fund	Commanding Officer CG Yard
Cadet Fund	Superintendent, CG Academy
Commissary Stores Surcharge Fund	G-W
Oil Spill Liability Trust Fund	NPFC
Boat Safety Account	G-O

3.C.5 Headquarters Operating and Support Managers

While funds distribution to meet the Coast Guard's operational requirements is provided directly to operational and support units, the financial aspects of the program must nonetheless be a major concern of program managers. Any significant change in program direction, operational tempo, etc., made by a program manager will affect the funds being administered and controlled by other offices and units.

3.C.6 Allotment Fund Control Code

The OE and RT appropriations are divided into functional categories called Allotment Fund Control (AFC) Codes.

3.C.6.a OE AFC Managers Responsibilities

Whether the AFC is widely distributed, as is the case with training funds (AFC-56), or centrally managed as with military pay (AFC-01), the management of these funds involves similar requirements:

1. Funding provided by Congress, G-CCS, and reimbursements, as well as any specific requirements associated with that funding.

2. Determining the distribution of funds within the AFC, and establishing guidance for users.

3. Tracking the flow of funds into and out of the AFC and among ATUs.

4. Tracking obligations against planned amounts for the entire AFC to ensure compliance with spend down rates. Enforcing the current business rules for meeting OMB apportionments (e.g., spend down rates, spending ceilings, quarterly apportionments).

5. Monitoring accounts and adjusting resources as necessary.

6. Reporting accurate closeout positions for the entire AFC to the appropriation manager.

7. Conducting post-fiscal year review of all closeout results for comparison to reported closeout projections. Taking appropriate follow-up action where necessary.

8. Managing funds that have expired for obligation purposes.

3.C.6.b AFC Managers

The following table outlines the AFC assigned managers.

AFC	Title	AFC Manager
AFC-01	Military Pay	CG-831
AFC-08	Civilian Pay	CG-83
AFC-20	Permanent Change of Station (PCS)	G-WRP
AFC-30	Operating and Maintenance	CG-83
AFC-38	Industrial Support Revolving Fund	G-SL
AFC-40	Chief of Staff Administrative	CG-83
AFC-41	Aeronautical Engineering	G-SEA
AFC-42	Telecommunications	CG-6R
AFC-43	Civil Engineering	G-SEC
AFC-45	Naval Engineering	G-SEN
AFC-56	Training	G-WRP
AFC-57	Medical	G-WRP
AFC-72	Retired Pay	G-WRP
AFC-77	Reimbursables Execution Accounts	CG-83
AFC-80	Reimbursables	CG-83
AFC-88	Reimbursables Special Purpose Account	CG-83
AFC-90	Reserve Training Program Expense	G-WTR
AFC-94	Reserve Reimbursable Program	G-WTR
AFC-97	Reserve Refund Program	G-WTR
AFC-98	Civilian Pay Reserve	G-WTR

3.C.7 Project Target Officers

Most of the non-OE appropriations are divided into functional categories by projects. Each project is assigned a project target officer who controls the funds for that project. A project target officer acts in much the same way as an OE AFC manager. Since projects vary widely from year to year it is impractical to list all the project target officers. There are however, a few "standing" projects that change very little from year to year. Below is a listing of appropriations that use project target officers. Where appropriate, a listing of specific project target officers are identified for those appropriations where there are "standing" projects.

Standing Projects	**Project Target Officer**
AC&I Administrative Expense Account	CG-83
RDT&E	CG-6
Alteration of Bridges (AB) Administrative Expense Account	G-OPT
Retired Pay	G-WRP
Retired Health Care Matters	G-WRP
Recreational Boating Program	G-OPB-3
Oil Spill Liability Trust Fund (OSLTF)	NPFC

3.C.7.a Project Officer Responsibilities

The responsibilities of the Project Officers include:

1. Distribution of funds to field ATUs.

2. Maintaining awareness of source and status of project funding, staying within funding limits.

3. Providing project funds status to the chain of command as appropriate.

4. Being aware of budget variances for each spending plan item and explaining the differences.

5. Developing project spend plans based on funding provided, and ensuring compliance with guidance received.

3.C.7.a Project Officer Responsibilities (Continued)

6. Satisfying any program element manager's administrative requirements.
7. Maximizing effectiveness of funds provided.
8. Managing funds that have expired for obligation purposes.

3.C.8 Supply Fund Management Officer

CG-83 is the Supply Fund Management officer and is responsible for:

a. Approving, evaluating, and adjusting the capital authorization of field activities.

b. Developing directives regarding inventory management, policy, and procedures.

c. Receiving and analyzing reports concerning financial and inventory management.

3.C.9 Gift Fund Manager

CG-8 is the gift fund manager and is responsible for the administration and control of this fund. The fund is limited to the acceptance of gifts to those benefiting schools, hospitals, libraries, museums, cemeteries or other institutions or organizations under jurisdiction of the Coast Guard.

3.C.10 Deposits and General Account Receipts

CG-8 is responsible for administration and control of the deposits and general account receipt funds.

3.C.10.a Special Deposits and Deposit Funds

These funds are primarily concerned with the administration of both military and civilian payrolls. They involve individual income taxes, social security/Medicare, United States Savings Bonds, state and territorial income taxes, Civil Service Retirement and Disability Fund, and Federal Employees Group Life Insurance Fund.

3.C.10.b General Account Receipts

These receipts generally cover fees for permits and licenses; fines, penalties, and forfeitures; rents; sale of products (utilities, publications and reproductions, etc.); fees and other charges for services and special benefits; sale of government property; and, recoveries and refunds. FINCEN accounts for these receipts and CG-83 tracks these receipts for the budget.

3.C.11 The Investment Board

The purpose of the Investment Board is to provide G-CCS and CG-8 with sound and reliable information on matters relating to resource allocation. The board looks at a wide variety of issues, from budget year priorities to current year targets and project deficiencies in a given appropriation, and makes recommendations G-CCS.

3.C.11.a The Resource Group

The primary role of the resource group is to act as an advisory body to the Investment Board concerning the prioritization of all investments, divestment and research alternatives. In doing so, the resource group must make significant contributions to Coast Guard planning. The resource group shall provide the following deliverables to the Investment Board.

1. Prioritization list of all investment, divestment, and research alternatives.
2. Recommended Proposed Reduction List with the prioritized alternatives.
3. Validated Agency Capital Plan.
4. Prioritized list of OPSTAGE requests.
5. Recommended OPSTAGE budget.

3.D Administrative Target Unit Officers

Administrative Target Officers (ATUs) officers are assigned to offices at Headquarters, maintenance and logistics commands, district command, and a Headquarters unit where there is a primary responsibility for managing a target received from an appropriations manager.

The ATU is authorized to further divide a target for control by staff elements and units supported by the ATU. These staff elements and units supported by the ATU officer are allocated to program elements.

ATU officers act as the principal financial management advisors for the ATU, coordinating all aspects of the OE budget process including the issuance of funding targets to units and staffs and serving as a member of the Budget Review Board. Other duties of the ATU Officer include:

1. Aware of funding and specific requirements from Congress, G-CCS, and reimbursable customers.

2. Coordinating all phases of the fiscal year budget model update and distribution processes.

3.D Administrative Target Unit Officers (Continued)

3. Tracking obligations against plans for each program element.

4. Tracking changes in funding levels in each program element.

5. Ensuring sound program element management, including ensuring program element status (PES) is reconciled weekly.

6. Explaining the full costs of the ATU's facilities.

7. Adjusting resources at closeout, including intra-AFC adjustments, to meet ATU goals; provide surplus funds to, or request additional funds from AFC managers.

8. Reporting closeout position to AFC managers.

9. Conducting post fiscal year review of CGOF closeout results for comparison with reported closeout projections for each Program Element. Taking corrective action as necessary.

10. Managing funds that have expired for obligation purposes.

3.D.1 Program Element Manager

The program element is the fundamental building block of the OE appropriation. All funds distributed for use through AFCs and ATUs reside in specific program elements. All funds are expended out of specific program elements. Program element managers are personnel to whom the ATU officer has delegated authority in writing to control funds provided via a program element. For most field units the program element manager is the unit commanding officer or officer-in-charge. At Headquarters, MLC offices, district offices, Headquarters units, and large field units such as large air stations and ISC where multiple program elements are assigned, program element manager responsibilities may be delegated to individuals who have the general management expertise and staff trained in financial management necessary to perform the duties of a program element manager. Specific responsibilities include:

3.D.1
Program Element Manager
(Continued)

a. Knowledge of funding approved and distributed to the program elements.

b. Developing and maintaining a spend plan for funding received.

c. Allocating funds to projects or departments.

d. Ensuring proper use of accounting classification codes.

e. Maintaining and reconciling a FPD up-to-date ledger for all transactions associated with the program element.

f. Ensuring receipt of all reports from CGOF and reconciling FPD ledger to CGOF weekly.

g. Identifying PES errors, analyzing for causes, seeking solutions and forwarding for action.

h. Ensuring transmittal of all receiving reports for goods and services.

i. Maintaining source document files for all obligations and procurements.

j. Comparing budgeted versus actual expenditures and evaluating all variances each fiscal year.

k. Using historic obligation data and new requirements, developing and submitting budget needs for each budget cycle.

l. Managing funds that have expired for obligation purposes.

m. Reconciling and correcting PES reports after the obligation authority for these funds expires and until the account is closed.

n. Reviewing (monthly) open obligations for all entrusted program elements of expired and unexpired appropriations.

3.D.2 Budget Review Boards

ATU officers, unit commanding officers, and staff officers who are responsible for program elements shall appoint a Budget Review Board to assist in the management of available funds. Considerable discretion is given to the composition of the board. However, certain officers are required to be members of this board. These requirements are outlined later in this chapter.

The requirement for a Budget Review Board shall be outlined in the financial management directives issued by the ATU officer. In this guidance the Budget Review Boards should:

a. Review budgets before they are forwarded to the next level in the chain of command.

b. Review actual spending as approved budgets are executed and make recommendations on how to deal with funding shortfalls or extra funds available for reprogramming.

c. Meet as required to effectively manage available funds.

3.E Area and Maintenance and Logistics Commands -Area Commanders

The area commander is responsible for the efficient and economical expenditure of available funds to carry out the missions of the area. The area commander is the immediate supervisor of the MLC commander who controls the AFC-30, AFC-4x and AFC-5x funds.

The area commander is authorized to shift funds within any AFC among districts, and between MLC's and area units on a non-recurring basis, and may also recommend recurring changes to the Commandant. The area G-CCS supervises area budget development and submission. Changes across AFCs must be completed with a CIFP. The CIFP process is laid out in 5.J of the FRMM

3.E.1 Chief Area Resource Division Staff

Duties of the Area Resource Staff, include:

a. Provides area commander's input to the Commandant for area-wide field commanders' operational priorities to include development of the Area Regional Strategic Assessments (RSAs). Channel area commander planning objective input to Headquarters program managers and CG-8.

3.E.1
Chief Area Resource Division Staff
(Continued)

b. Coordinates planning, budgeting, and performance management processes and functions across divisional lines and ensures necessary interaction and coordination with resource management components area-wide. Ensure the area-wide integration of the processes with the Coast Guard's strategic vision and goals.

c. Maintains liaison with Headquarters staffs to convey operational requirements in current and out-year budgets.

d. Assists in coordinating Coast Guard budget development with operational initiatives (more than one year) and long range plans for shore facilities.

e. With the local CEU, coordinates and executes the AFC-43/SSMR/Shore Facilities program.

f. Coordinates the development and execution of an area-wide measurement system encompassing measures based on planning, costs, resource allocation, and readiness.

g. Assists the area commander in establishing priorities among the plans, objectives, and resource requirements identified by area/district (D5 or D11 as appropriate) program staff.

h. Act as the out year (fiscal year +1, fiscal year +2) OE and AC&I Budget Build Coordinator for area.

i. Reviews, coordinates, and assists program staff in the development of their input to the Coast Guard Commandant including:

(1) Planning Proposals and Problem Statements
(2) RSA process
(3) Resource utilization/reprogramming requests
(4) Preliminary assessments of environmental impact

3.E.2 MLC Commander

The MLC commander supervises and coordinates the current budget year budgetary program for the MLC, assures the efficient management and use of all funds, and makes recommendations to the area commander when program adjustments are necessary to ensure effective use of available funds. The MLC commander is the ATU officer for all area and MLC staffs and units. The MLC deputy commander supervises and coordinates the preparation and execution of the MLC budget and assures the efficient use of funds.

3.E.3 MLC Comptroller Staff

MLC Chief, Comptroller Division, acts as the principal financial management advisor to the area and MLC commanders, coordinating all aspects of the area/MLC OE budget process including the issuance of funding targets to area/MLC units and staffs and directives/guidance needed to effectively manage the funding provided. The Chief, Comptroller Division, administers all AFC-30 funds for the area/MLC.

3.E.4 Area and MLC Staff Responsibilities

Other staff elements with major financial management responsibilities are as follows:

a. Chief, Area Operations Division - Retains direct management responsibility for AFC-30 funds for area cutters and serves as a member of the area Budget Review Board.

b. Chief, Area Command, Control & Communications Division - Retains direct management responsibility for AFC-30 funds for communication stations and serves as a member of the MLC Budget Review Board

c. Chief, MLC Command, Control and Communications Division (t) - Administers AFC-42 and serves as a member of the MLC Budget Review Board.

d. Chief, Civil Engineering Division MLC (s) - Administers AFC-43 and serves as a member of the MLC Budget Review Board.

3.E.4
Area and MLC Staff Responsibilities
(Continued)

e. Chief, Naval Engineering Division MLC (v) - Administers AFC-45 for vessel maintenance and repair and serves as a member of the MLC Budget Review Board.

f. Chief, Personnel Division MLC (p) - Administers AFC-30T for local professional training and off-duty education for area units, area and MLC staffs and serves as a member of the MLC Budget Review Board.

g. Chief, Health Services Division MLC (k) - Administers AFC-57 for all medical equipment and direct health care and serves as a member of the MLC Budget Review Board.

h. MLC Program Managers -While funds distribution to meet operational and support requirements is provided directly to those operational and support units, the financial aspects of the program must, nonetheless, be a major concern of operating and support managers. Any significant change made by a program manager will affect the funds being administered and controlled by other offices and units.

3.F
District Commands - District Commander

The district commander is responsible for the efficient and economical expenditure of funds to carry out the missions of the district. The district commander is the ATU officer for the district.

3.F.1
Chief of Staff

The district Chief of Staff under the direction of the district commander, supervises and coordinates the budgetary program of the district, ensures the efficient management and use of district funds, and makes recommendations to the district commander when program adjustments are necessary to ensure effective use of those funds.

3.F.2
District Budget Staff

District budget staff manages the planning and execution of the programs for finance and budget. They are the principal financial management advisor to the district commanders, coordinating all aspects of the district OE budget process including the issuance of funding targets to district units and staffs.

3.G Headquarters Unit - Commanding Officers

The commanding officer of a Headquarters unit is the unit's designated ATU officer and is responsible for the efficient and economical expenditure of funds provided to carry out unit missions. The unit commander is the ATU officer for the unit. In addition, the commanding officer at the Coast Guard Yard, is also the Yard Fund appropriation manager and Superintendent, and Coast Guard Academy is the appropriations manager for the Cadet Fund.

3.G.1 Executive Officers

The Executive Officer/Deputy Director of a Headquarters unit, under the direction of the unit commander, supervises and coordinates the budgetary program of the unit, ensures the efficient management and use of unit funds, and makes recommendations to the unit commander when program adjustments are necessary to ensure effective use of those funds. This individual shall serve as chairperson of the Budget Review Board.

3.G.2 Headquarters Unit Financial Management Staff

Organization of Headquarters units varies widely; however, each should have a designated financial management staff. This staff is responsible for coordinating all aspects of the unit's budget process including the issuance of funding targets to subordinate units and staffs, and developing directives and other guidance to foster good stewardship over the funds provided. If the mission of the unit makes it impractical to assign one individual as an overall unit financial officer, financial management duties and responsibilities shall be clearly outlined in unit directives.

3.H Field Unit - Commanding Officer

As the end user of funding provided to the administrative operating target at an area, MLC, or district unit, the individual unit commanding officer is responsible for the efficient and economical expenditure of available funds to carry out the unit's mission. They must ensure that the unit's funds are used only for the purposes for which they were provided and in accordance with established laws, rules, and regulations.

3.H.1 Executive Officer

The Executive Officer, Deputy Commander, or Executive Petty Officer, under the direction of the Officer in Charge, supervises and coordinates the budgetary program of the unit, ensures the efficient management and use of unit funds, and makes recommendations to the unit commander when program adjustments are necessary to ensure effective use of those funds.

3.H.2 Unit Financial Managers

Unit commanders shall designate personnel to administer unit funding. This individual will be responsible for coordinating all aspects of the unit's budget process including the issuance of unit funding targets to subordinate staffs and developing directives and other guidance to foster good stewardship over the funds provided. If the mission of the unit makes it impractical to assign one individual as an overall unit financial officer, financial management duties and responsibilities shall be clearly outlined in unit directives.

In order to maximize the effective use of AFC-30 funds and allow unit commanders maximum flexibility for the management of normal recurring expenses, funds are passed to the lowest level bearing both the operational and funding responsibility. In general, all funds should be programmed to the unit level with only a small contingency. Maintenance of large contingency accounts fosters dependency in spending patterns, usually displayed in excessive fourth quarter expenditures.

3.I Accounting Activities - Overview

The following units carry out major accounting functions in support of the financial management program of the Coast Guard.

a. Finance Center

b. Engineering Logistics Center

c. Aircraft, Repair and Supply Center

d. Personnel Service Center

e. Federal Aviation Administration pay office (civilian pay)

3.I.1 Finance Center

Finance Center (FINCEN) is responsible for consolidating all Coast Guard accounting information. Furthermore, FINCEN provides direct, day-to-day vouchering (bill paying) and accounting support for the vast majority of Coast Guard units and staffs. FINCEN is responsible for establishing policies and procedures to carry out these functions. Policies and procedures related to these functions promulgated by FINCEN apply to the entire Coast Guard.

4.A The Stages and Format of the Budget - Budget Cycle

The budget formulation process is essentially a continuous effort, with a gradual change in focus from broad program to specific line - item requests. There are however, discrete actions, which serve to divide the process into four phases or "stages".

1. The "Forecast Stage" is a six-month period that commences approximately 15 to 21 months in advance of OPSTAGE.

2. The "DHS Stage" involves the preparation and presentation of the Coast Guard's initial submission of its detailed budget requirements to DHS. This stage usually comes to an end by mid-to-late August with receipt of the Secretary's "passback" allowances, and is finalized and submitted to OMB by early September.

3. The "OMB Stage" involves preparation and presentation of the refined DHS stage budget request. This stage usually begins in early September and usually ends in late November.

4. The "Congressional Stage" involves preparation and presentation of the final budget request to Congress in early January. This document normally contains much more detailed exhibits and tabular presentations than the two previous stages. The subsequent Congressional hearings, reviews, and allowance process is usually completed in the July-September time frame with enactment of authorization and appropriation statutes.

5. The "Operating Stage" or OPSTAGE refers to the entire budget execution phase; from the time the appropriation is enacted through September of the following year. Most people in the Coast Guard primarily deal with the OPSTAGE. The OPSTAGE is also commonly referred to as the Budget Year (BY). Detailed procedures on how this works are contained in chapter 5 of this Manual.

4.A.1 Budget Format

Through an annual re-issuance of OMB Circular A-11 and a consolidated OMB A-34, the President prescribes instructions for the preparation and submission of the annual budget estimates. The Circular also prescribes instruction on the execution of the budget. These instructions are directed toward the OMB and Congressional Stage submissions.

a. **Participants** - All Headquarters managers are involved in the Coast Guard budget formulation process. The Formulation Division (CG-82) receives the budget requests from Headquarters program managers. These requests are reviewed and consolidated by CG-82. The Offices of Programs (CG-82) ranks the requests. The finalized list is presented to G-CCS at Headquarters. The budget schedules are formulated and developed by (CG-82). The budget schedules are described in detail in the OMB Circular A-11.

b. **Budget Presentation** -The formats for submission of the DHS and OMB stages usually do not normally vary from year to year; however, in FY 2004 the Administration directed federal agencies to submit a performance-based budget. A process that changed the format for the DHS's OMB submission. The presentations may be incremental or zero-based, depending upon the nature of the appropriation being addressed. The OMB specifies the exact format of budget schedules in its annual reissuance of Circular A-11 with additional guidance from DHS.

4.A.2 Congressional Stage

The Coast Guard prepares the Congressional Stage submission using an incremental basis for its "annual" or "one-year" appropriation, i.e., the narrative justification is geared toward explaining changes to the previous year's level. For its "multi-year" and "no-year" appropriations, the format shifts to a "zero-based" presentation, i.e., the narrative justification is geared toward explaining all proposed budget-year project requirements.

4.A.3 OPSTAGE Budget

The OPSTAGE budget provides more detailed information as to how appropriations will be used. Each appropriation manager is responsible for developing guidance as to the format to be followed for OPSTAGE budgets. For example the OE appropriation uses the Integrated FPD.

4.B Public Disclosure

OMB has issued strict guidelines in OMB Circular A-11, (Section 22, governing the classification of budget estimates, which are considered confidential). All agencies must treat budget material as privileged communication until the President delivers his budget message to Congress. This means that Coast Guard personnel must not disclose the contents of the Forecast, DHS, and OMB Stages to the public, Congressmen, Congressional committees, or Congressional staff, without first reviewing OMB's guidelines in the OMB Circular A-11. Even after publication of the President's budget message, Coast Guard personnel may only disclose the identification of line items in earlier stages of the budget in response to direct Congressional inquiry.

4.B.1 Release or Withholding of Information

The provisions for the release or withholding of information in response to the Freedom of Information Act requests are stated in the Freedom of Information Act (5 U.S.C. 552).

4.B.2 Question on Public Disclosure

All Coast Guard personnel shall refer questions concerning matters of public disclosure of budget or program material to CG-83 and CG-82 for resolution via the chain of command.

4.C DHS and OMB Stage Budgets -Relation to Forecast Stage

The DHS Stage is a "follow-on" to the Forecast Stage. The DHS Stage budget reflects the impact of program guidance prescribed by the DHS during the April-May time period. However, the DHS does not normally establish specific resource ceilings or limitations for the DHS submission during this process.

4.C.1 Budget Preparation Guidelines

DHS normally provides specific budget preparation guidance in early May. The internal Coast Guard preparation, review, and prioritized ranking process usually culminates in mid-to-late June with the submission of a budget, reflecting the Commandant's decisions on resource requirements, to DHS by early to mid-July.

4.C.2 Receipt of Allowances and Appeal

By mid-to-late August, the Secretary provides the "Passback" or allowance on the Coast Guard's budget request, an appropriation by appropriation ceiling on budget authority, military and civilian positions, full time equivalent (FTE) levels of employment, and end-of-year employment (optional). The Commandant normally has a short period of time in which to appeal any of these allowances to the Secretary.

4.C.3 Relation to DHS Stage

The OMB Stage budget primarily represents a refinement of the DHS Stage. Following completion of the Secretarial Passback and-appeals process, CG-83 and CG-82 revise the Coast Guard's budget to reflect the Secretary's decisions.

4.C.3.a Preparation and Submission

In order to meet OMB's early September submission deadline, CG-83 and CG-82 begin revising the budget immediately after the Commandant receives the final "Passback" from the Secretary.

4.C.3.b OMB Review, Allowances and Appeal

OMB's review of the Coast Guard budget normally lasts until mid November and the Passback is received in late November. There are also formal hearings with top Coast Guard management, usually the Commandant, Vice Commandant, G-CCS, CG-8, CG-83, CG-82, and selected Assistant Commandants. The Passback and appeal process is much the same as that for the DHS Stage with most major decisions being made by the Director of OMB. However, the President may resolve some major issues with broader implications.

4.D Congressional Stage Budget - President's Budget

Preparation and submission of Congressional Stage Budget. After receiving OMB's final Passback, CG-83 begins to make appropriate revisions to the resource levels contained in the technical budget schedules, which comprise the Coast Guard's input into the MAX system that generates the budget of the United States government (Appendix volume). The President submits this document to Congress on or before the first Monday in February following the annual State of the Union address in January.

4.D.1 Preparation and Submission

CG-83 and CG-82 prepare the Congressional budget using both incremental and zero-based formats, depending on the nature of the appropriation account. The makeup of this submission goes well beyond the schedules contained in the President's budget,

4.D.1 Preparation and Submission (Continued)

by providing extensive narrative justification for each requested line item and project contained in the major accounts within the budget. DHS and OMB review copies of this document prior to it being transmitted, by the Coast Guard, to the Transportation Subcommittees of the House and Senate Appropriations Committees.

4.D.2 Funding, Military Strength and Student Load Authorization

Each year the House Merchant Marine and Fisheries Committee and the Senate Committee on Commerce, Science, and Transportation review, Coast Guard activities, resource levels, active duty military strength, and military student training loads funded within the OE, AC&I, AB, EC&R and RDT&E appropriations. These levels are usually approved by the above committees in annual authorization statutes prior to the Appropriations Committees actually appropriating funds for Coast Guard activities.

Funding, Military Strength, and Student Load Authorizations. G-LLX has primary responsibility for preparation and submission of the Coast Guard's annual authorization request to DHS, OMB, and the Congress.

4.D.3 Selected Reserve Strength

Each year the Congressional Defense Authorization Committees through the annual DOD Authorization Act must approve the strength of the selected reserve prior to any appropriation of RT funds by the Appropriations Committees.

Director of Reserve Training (G-WT) has primary responsibility for preparation and submission of the Coast Guard's annual selected reserve strength request to DHS, OMB, and the Congress.

4.D.4 Congressional Committee Review

House and Senate appropriations and authorization subcommittees normally schedule hearings in February, March, and April. Preparations for Coast Guard witnesses begin in earnest in January and usually includes the following:

1. Background Book Question (BBQs) prepared in a prescribed "bullet" format, covering, in brief, anticipated hearing topics.
2. Written statement for the record.
3. Briefing sessions Murder Boards for the Commandant and other witnesses to review the foregoing material.

4.D.4.a Subcommittee Hearing

Coast Guard witnesses for these hearings usually include the Commandant, the Vice Commandant, G-CCS, CG-8, CG-83, and CG-82. These hearings normally begin with the witness opening statement followed by an extended period of questioning by subcommittee members on specific budget items and other related subjects.

As a follow-up to these "face-to-face" meetings, the subcommittees normally request written answers to additional questions for the record. This information, which the subcommittee reviews during its decision-making process, is also published in the hearing record.

Turnaround time for budget questions from the subcommittee is generally very short, and all program and support managers become involved in providing responses.

4.D.4.b House Subcommittees

The House appropriations and authorization subcommittees, having held hearings somewhat earlier than their Senate counterparts, act through their full committees in issuing a bill and report with appropriation allowances usually in the May-June time-period. The Commandant has the option, and with the approval of the Secretary, to appeal any reductions to the still-to-act Senate subcommittees.

4.D.4.c Senate Subcommittees

Acting somewhat as a "court of appeals," the Senate subcommittees react to the Secretary's appeal as well as completing their own independent reviews. These subcommittees, through their full committees, issue bills, reports, and appropriation allowances, usually in the June-July time-period. House and Senate committee representatives then form a conference committee to resolve differences in the allowances provided by each in their bill and report. After both houses pass the final bill, the President usually signs into law the resulting compromise measure in August-September completing the budget formulation process. Congressional authorization and appropriations committees customarily develop and publish narrative reports to accompany their proposed bills. Besides providing the rationale for recommended resource levels, these reports often provide general or specific program guidance as well as directing the completion of certain action items. CG-83 will annually publish a summary of congressional guidance and action items with the final OPSTAGE budget (See chapter 1 section C.1.b for the Congressional Budget Process timetable).

4.E Operating Stage - Overview

Chief, Office of Budget (CG-83) under the direction of CG-8 and G-CCS has primary responsibility for OPSTAGE. CG-83 issues guidance on OPSTAGE budget formats, procedures and timetables to supplement the guidance contained in this approval. Appropriation managers are responsible for providing the detailed guidance for their appropriation. OPSTAGE budget formulation is highly dependent on the appropriation.

4.E.1 OPSTAGE Financial Plans

Using the most current information, CG-83 reviews and adjusts line items included in the Congressional Stage budget to generate the draft OPSTAGE financial plan. The final OPSTAGE financial plan makes adjustments to program spending levels based upon the actual appropriation.

4.E.1.a Apportionment Process

Annually, Congress forwards the Appropriations Bill to the President, funding the various agencies of the government, for signature. Even after the President signs it, these funds are not available (for obligation) until the OMB completes the apportionment process. This applies to all funds appropriated, as well as, anticipated reimbursements and receipts to Coast Guard appropriation accounts. CG-83 is the Coast Guard apportionment coordinator.

4.E.1.b Carrying over Un-obligated Funds

In the no-year or multi-year appropriation accounts, such as AC&I, AB, RDT&E, BS, OSLT, and EC&R, un-obligated funds may be carried over from one year to the next for obligation. Appropriation managers must submit an apportionment request in order to make the prior years un-obligated balances available for obligation in the new fiscal year. OMB authorization to use these no-year or multi-year funds is termed “apportionment”.

In apportioning any account the execution fund manager may reserve funds to provide for contingencies or to effect savings from changes in missions or programmatic requirements (31 U.S.C. 1512). The Impoundment Control Act of 1974 (2 U.S.C. 681-688) contains the rules for establishing reserves for deferral or rescission.

4.E.2 OPSTAGE

As the OE appropriation manager, CG-83 is responsible for preparing the OE OPSTAGE budget. The first cut on this is called the draft OPSTAGE financial plan. The draft OPSTAGE financial plan takes the Congressional Stage budget and breaks it down into AFCs. This financial plan also reflects planned recurring or nonrecurring adjustments between AFCs. The draft OPSTAGE financial plan is usually completed in the third quarter prior to the start of the new fiscal year on 1 October. A final OPSTAGE financial plan is prepared after the Coast Guard's appropriation is enacted. It is very similar in content to the draft OPSTAGE financial plan, and includes both Congressional adjustments and nonrecurring adjustments made to cover emergent and critical needs for that fiscal year.

4.E.2.a AFC Financial Plans

AFC managers shall develop AFC financial plans. These plans are based on the CG-83 plan and provide additional details as to who will control funding and for what it is authorized.

4.E.2.a.(1) ATU and Headquarters Program Mangers Involvement

OE funding is generally provided to ATUs when a facility, program or requirement is first established. For districts, a system of budgeting called the District Budget Model applies. In subsequent years this funding generally becomes a part of the ATU base. (The base is automatically provided each year at the same level as in previous years unless significant changes to requirements, including cost of living adjustments, occur).

When a facility is decommissioned or a requirement goes away, funding is withdrawn from the base. Each office at Headquarters is treated in much the same manner as an ATU.

4.E.2.a.(2) Ensure Changes Reflected in OPSTAGE Financial Plans

ATUs and Headquarters program managers must ensure that changes are reflected in OPSTAGE financial plans. Most major changes are handled via the planning process as outlined in the Planning and Programming Manual -Volume II (Field Planning Manual), COMDTINST M16010.6 (series). Smaller changes may also be addressed in the OPSTAGE process. Changes not meeting the planning proposal process are addressed via letters and messages to Headquarters program managers. If additional funding is needed in these cases it will have to be accomplished by taking it from other Coast Guard activities. Funding available via internal reprogramming is generally very limited.

4.E.2.a.(2) Ensure Changes Reflected in OPSTAGE Financial Plans
(Continued)

Significant changes to OE funding requirements beyond the capability or needs of an ATU or Headquarters program managers should be requested as soon as the change becomes known. A $50,000 change is generally the minimum amount that should be referred beyond the ATU or Headquarters program manager level. ATUs and Headquarter program managers are generally adequately funded to resolve needs below the $50,000 level.

4.E.2.a.(3) Summarizing Base Level Needs

ATUs and Headquarters program managers summarize their base level needs and requirements for changes to base level funding in an annual financial plan submission. For districts, the District Budget Model applies. ATU and Headquarters program manager financial plans for the OE appropriation are submitted annually to CG-83. CG-83 is the overall coordinator for these plans. Plans are divided by AFCs and are required for all AFCs controlled by an ATU or program manager. CG-83 establishes formats and submission timetables. Financial plans are generally due in CG-83 by late July of each year for the fiscal year beginning on 1 October.

4.E.2.a.(4) Submitting OE Financial Plans

FPD shall be used for submitting OE financial plans. CG-83 is responsible for maintaining this system and providing instruction for its use.

4.E.2.a.(5) Review of Items Submitted by ATU

CG-83 coordinates Headquarters program managers' review of items submitted by ATUs. FPD is used to facilitate this review. Program and AFC managers shall complete their review of the ATU financial plans in accordance with the established timetable. Disapproval of requests shall be explained in accordance with the established procedures. CG-83 shall collect/review results from AFC managers and shall provide a consolidated response back to the submitting ATU. CG-83's response back to the ATU is highly dependent on when the Coast Guard's appropriations are enacted. Budget personnel at ATU's shall make frequent telephone/e-mail contact with CG-83 personnel to monitor Headquarters review/action on their budget submissions.

4.E.2.a.(6) Approved Financial Plans

ATUs will be formally notified of action taken on their financial plan via a letter and through FPD.

4.E.2.a.(7) Reclama

ATUs shall generally be given the opportunity to request reconsideration of disapproved or reduced budget request line items (reclama). Guidance for reclama submission will be provided with the approved financial plan. Reclamas are due at Headquarters 30 days after units receive approved financial plans.

4.E.2.a.(8) Additional Documentation Requirements

ATUs and program managers may be required to submit additional information to justify their financial plans. The AFC manager shall establish the format and timeliness for submission of this information. One example of additional documentation is AFC-30 spend plans.

4.E.3 Other Appropriation Financial Plans

Financial Plans for AC&I, RT, RDT&E, AB, RP, BS, and EC&R are also included in the final OPSTAGE budget.

4.F ATU Budget Procedures - General

All ATUs have input to all phases of the budget cycle. In the formulation process, this input may be in the form of planning proposals, AC&I data sheets, project proposal reports, STRUCTALTS, etc. In OPSTAGE, ATUs request funds from the cognizant appropriation manager on a project-by-project basis. OE funding requests are submitted in accordance with instructions provided in the annual guidance provided by Headquarters and via the FPD. The use of FPD is mandatory for all AFC's that distribute funds to the field through the ATU budget process. AFC managers are responsible for ensuring compliance with the general guidance regarding the annual ATU budget process, and for issuing amplifying budget submission and review guidance to the ATU and Headquarters program managers. Other appropriation requests must be submitted in accordance with appropriation manager guidance. The FPD User Guide, which provides detailed instructions on the use of FPD, is published and distributed separately.

4.F.1 Schedule of Submission/Annual Headquarters Guidance

ATUs will receive guidance for submission of annual budgets from CG-83 about 1 May. This guidance will set forth the programs, by AFC Code, which may have an impact on the financial programs of the unit. ATU budgets are generally due to CG-83 by 1 July of each year.

4.F.1.a General Guidance

Initial notification of changes in funding requirements must contain full support and explain the increased or decreased funding need. In general, FPD should not be used as the initial notification to Headquarters of previously unknown funding requirements. Instead, ATUs shall forward, via letter, requests for new funding that does not meet the requirements specified in the Planning and Programming Manual – Volume II (Field Planning Manual), COMDTINST M16010.6.

If the program manager acts on the request prior to the FPD submission due date, there is no requirement to include the request in FPD. The program manager will incorporate approved requests into the ATUs budget. Un-funded requests have already been reviewed; unless new and compelling information can be presented to further support the un-funded request, such requests should not be resubmitted in FPD for funding consideration. Program managers must be made aware of new requirements as soon as they are known. Many requests submitted for the first time in FPD have not received funding support because Headquarters program managers were unaware of these funding requirements in time to seek budgetary relief either through regular appropriation action or supplemental action.

4.F.1.a.(1) Reference Explanation

When submitting changes in FPD relating to previously submitted planning proposals, or other correspondence, a referenced explanation is sufficient. The references cited should be restricted to Headquarters directives, Resource Proposal (RP), Funds Transfer Authorization or ATU correspondence with Headquarters. While the ATU commander has discretion in how ATU funds are expended, an ATU planning factor or FPD request by itself is not considered sufficient justification for a funding request. Generally, only planning proposals previously approved by Headquarters are valid justification for a line item budget request.

4.F.1.a.(2) Final Review and Distribution

After receipt from the ATUs, Headquarters AFC managers will review, approve and forward to CG-83, FPD items submitted by ATUs for final review and distribution. Each FPD line item will show approved funding levels for each target beside the amount requested. AFC managers will ensure that cognizant program managers have provided an explanation for items not funded or substantially reduced. AFC managers may also initiate and approve an FPD item on behalf of an ATU. If the program

4.F.1.a.(2)
Final Review and Distribution
(Continued)

manager has provided funds via FPD, and in absence of a request from an ATU, and if not readily apparent, they will also provide the purpose for the additional funding.

4.F.2
Preparation of Estimates/ATU Estimates

Each ATU shall prepare a budget estimate and submit it as stated in the Headquarters guidance, to the cognizant Headquarters appropriation manager or designated coordinating office. Within the OE appropriation, CG-83, via FPD, will provide access to line items to the appropriate AFC, program or support manager. The FPD User Guide provides general instructions for the preparation of an ATU's FPD submission. Supplementary instructions for the submission of budget estimates for each OE AFC, and all other appropriations, are contained in the annual Congressional Stage Planning Factors document. The formal, annual FPD budget submission from the ATUs to Headquarters is done via electronic mail. However, all ATUs, including the MLCs and areas, are encouraged to submit correspondence to CG-8 addressing their budgets or any specific areas of concern.

4.F.2.a
Program Manager Review

Once ATU OE budget estimates have been received at Headquarters and loaded into FPD, Headquarters program managers will review the requests for funding. For each budget line item, ATUs must indicate the Headquarters office that has responsibility for reviewing the FPD line item.

4.F.2.b
Integrated Budget Development System

Headquarters guidance and the FPD User Guide both provide instructions for the use of FPD to submit funding requests. A key to a streamlined, effective budget review process is a thoughtful, thorough review of each individual budget line item request submitted by the ATU. Inappropriate and/or unsupported requests serve only to increase the time needed to analyze and process legitimate line items; screening of potential budget items at the ATU level is therefore a vital component of the budget process.

4.F.2.c Program Codes and Definitions

The assignment of the correct program manager is critical to the timely review of each AFC-30 funding request submitted in FPD. The following is a list of the MANAGER/CODE and general programmatic responsibilities assigned to each.

MANAGER CODE	Responsibilities
CG-83	Standard Personnel Costs (SPC), cost of living (COL), energy, and clerical adjustments, general AFC-30 issues not covered by any other program. NOTE: DO NOT use CG-83 as the "default" office for funding issues. Contact CG-832 if unsure about what office to assign an item to in IBUDS.
G-M/M	Includes oversight for the following directorates: G-MO, G-MS, G-MW, and G-MR. These encompass a wide range of Marine Safety program elements, including field activities (compliance, response and investigation/analysis): Waterways Management (vessel traffic management, pilotage and port safety/security); Resource Management(information resources, financial management, planning and human resources) and Environmental Standards (design/engineering standards, marine personnel qualifications and hazardous materials). Additionally, provides oversight/support to the following Headquarter Field Units: National Maritime Center (maritime personnel licensing), Container Inspection and Training Assist Team and National Strike Force Coordination Center (oversees the Strike Teams).

4.F.2.c
Program Codes and Definitions
(Continued)

MANAGER CODE	Responsibilities
G-O	Short Range/Radio ATON, bridge administration, search and rescue, ice operations (including the international ice patrol), auxiliary, defense operations, intelligence, law enforcement, recreational boating safety, and the Coast Guard Investigative Service.
G-OP	Military Readiness including MDZ activities, exercise planning and funding. Support for small arms program and other defense operations programs G-O/O. Enforcement of laws and treaties, Search and Rescue Program.
G-W	Personnel support including recruiting, training (other than small arms/operational training), family housing, morale, recreation and uniform support.
CG-6	Information and Technology (IT) including oversight of IT systems, reviews of spending plans for IT activities, records managements, FOIA and Privacy Act management, forms, reports management, directive management and postal management. CG-6 should NOT be used as a "default" office for information technology initiatives. Engineering, logistics, command, control, communications, electronics and computers. Command, control, and communications including general computer support, telephone, telecommunications, and Coast Guard electronics support.

4.F.2.d Supplemental Instruction for Submitting Budget Estimates for AFCs Other Than AFC-30

Most of the guidance and information provided for the completion, submission and review of budget estimates for AFC-30 via FPD is the same for other AFCs. However, the individual AFC manager will provide any specific guidance needed for the preparation and submission of budget estimates for that particular AFC in the annual Headquarters guidance.

4.F.2.e Appeals

Generally, ATUs will be given the opportunity to appeal funding decisions made during the annual budget process. Appeals shall be submitted to the cognizant AFC or program manager, as appropriate. Appeals should be limited only to those items, which were the subject of the Headquarters guidance, FPD or previous correspondence submitted prior to 1 May. Use the appeal process to point out any items, which may have been overlooked, or to note additional information, which was not available to the program manager at the time the budget item was considered. ATUs will normally be directed to submit appeals within one month of receiving their final operating targets. Appeal submission guidance, including the submission deadline, is generally provided concurrent with transmittal of the approved ATU operating targets.

4.G RT Appropriation Financial Plans - Schedule for Submission

Normally, G-WTR will distribute budget guidance by 30 May. ISCs, via MLCs, will submit AFC-90 budget requests as directed by G-WTR budget guidance letter. A copy of each submission and the associated work sheets are to be sent to Headquarters G-WTR by the date promulgated by G-WTR.

4.G.1 General Guidance

Annual guidance will be provided to determine the parameters to be used in completing budget requests.

Funding requests will be zero based and fully justified on the work sheets provided for specific line items.

Administrative items will be funded by PSCR. Requests for RT funding by commands, other than MLCs and ISCs should be forwarded to the local servicing ISC for inclusion in the budget.

4.G.2 Preparation of Estimates - ISC/MLC Requests

Each ISC will prepare a budget estimate and submit via MLC to G-WTR by 15 July, or as stated in the budget guidance letter.

Once ISC/MLC budgets are received at Headquarters, they will be reviewed for each budget line item by 1 October.

4.G.3 Appeals

ISC/MLC staffs may appeal funding decisions made during the annual budget process by correspondence with G-WTR regarding particular line items. Appeals should normally be submitted within one month and should address items, which may have been overlooked, or provide additional information not available to the program manager at the time the budget item was submitted.

4.H Standard Personnel Costs (SPC) - Discussion

SPC provides estimates of the costs associated with the addition or deletion of civilian positions and military billets through the budgetary process. In essence, they preserve support-funding bases that might otherwise be eroded through the incremental addition of new billets. These estimates shall be used when preparing budget documents for the relevant budget year and for other internal purposes such as RPs and planning proposals, refunds, and ADSW-AC reimbursable. Where the SPC does not apply, such as when travel requirements increase due to program needs, nonstandard estimates may be developed and submitted with supporting justification to the Office of Financial Systems (CG-84) for use in budget planning. Wage grade billets do not receive SPC funds. CG-84 will annually issue updated SPC tables by 1 February.

4.H.1 SPC Categories

There are three categories of SPC: Personnel Salary Costs, Headquarters Managed Personnel Support Costs and Field Managed Personnel Support Costs.

a. Personnel Salary Costs - Military salaries (AFC-01) reflect estimates for basic pay, BAQ, VHA, subsistence (BAS or SEPRATS), social security/Medicare, reenlistment bonuses, severance pay, separation allowance, uniform clothing allowance, death gratuities, etc. Civilian salaries (AFC-08) include salaries, overtime, awards, retirement, group life insurance, health benefits, unemployment compensation, and social security/Medicare.

b. Headquarters Managed Personnel Support Costs - These costs include transportation and shipment of household goods (AFC-20); personal property damage claims, FTS bills, recruiting expenses, Coast Guard standard workstation, hardware, software and maintenance, start-up costs (furniture and fixtures), and contract dining facilities (AFC-30); training (AFC-56); and medical care (AFC-57).

4.H.1
SPC Categories
(Continued)

c. Field Managed Personnel Support Costs. These costs include normal local telephone services, recreation, housekeeping, routine administrative travel (does not include funding for program travel requirements), transportation and routine office equipment

4.H.2
Personnel Salary Costs

Military and civilian salary estimates are calculated each year by CG-84. Program managers shall use these rates for planning and cost estimating purposes in the year indicated and in the two succeeding years for RP preparation budget and supplemental request processes.

Each year Headquarters program managers calculate Standard Personnel Support Costs rates for PCS, FTS, claims, medical, recruiting and training, etc. Generally, they are based on Coast Guard-wide average costs per person from the preceding year. These costs are gathered from accounting data. Rates are for the year(s) indicated in the SPC Table.

4.H.3
Distribution

The OPSTAGE financial plan distributes SPC funds into the recurring and nonrecurring funding bases of Headquarters AFC managers. Each OPSTAGE budget line item, which involves a net change in billets, will include an adjustment of funds for SPC. These funds are distributed on a per billet basis.

4.H.3.a
Personnel Salary Costs

The OPSTAGE financial plan distributes salary funds directly to Headquarters AFC managers (AFC-01 for military personnel and AFC-08 for civilians). These two accounts are centrally managed and no further distribution is made.

4.H.3.b
Headquarters Managed Personnel Support Costs

The OPSTAGE financial plan distributes Headquarters managed support costs directly to managers for AFC-20, 30, 56, and 57. G-WRP centrally manages AFC-20, so no further distribution is made. A majority of the funds provided to AFC- 56 and 57 are retained at Headquarters for those centrally administered programs (e.g., “A” schools, “C” schools and PG schools; CHAMPUS, and DOD provided medical care). Program managers for these AFCs also distribute a small portion of these funds to the field for locally managed programs supported by these AFCs. The Headquarters AFC-30 manager, CG-83, receives funds in the OPSTAGE financial plan to support the claims and FTS accounts. CG-83 distributes these funds to the appropriate program managers in the Headquarters AFC-30 Source of Funds.

4.H.3.c Field Managed Personnel Support Costs

The OPSTAGE financial plan initially distributes field managed support funds to the AFC-30 manager. CG-83 distributes these funds recurring to individual ATUs based on the net change in OE, AC&I, RDT&E, RT, and EC&R billets reflected on an ATU's Personnel Allowance List (PAL and RPAL). CG-83 compares the PAL and RPAL approximately 31 July of the previous fiscal year to the PAL and RPAL from approximately 31 July of the current fiscal year in order to calculate the SPC adjustment for the next fiscal year. CG-83 also distributes a mid-year OE SPC adjustment via FTA, this adjustment takes into account changes in an ATU's billet structure that have occurred since the beginning of the fiscal year. This adjustment is nonrecurring.

4.H.3.d Billets/Positions Deleted

In general, when billets/positions are deleted, SPC funding is reduced in the affected year. However, AFC-20 recurring funds are reduced for the fiscal year following the actual event, because the full SPC funding level is necessary in the pertinent fiscal year to transfer personnel vacating the deleted billets.

4.H.3.e Recurring Costs Associated with Reprogramming or Deletion of Billets/Positions

In AFC-20 there may be nonrecurring costs associated with the reprogramming or deletion of billets/positions. In extraordinary circumstances involving a large number of personnel transfers, such as a major reorganization, decommissioning, or relocation of a unit, G-CCS will ensure that nonrecurring AFC-20 funding is provided. In those cases, nonrecurring SPC for the particular year is multiplied by the number of billets affected. Funds will be provided through the normal RP process, or through the reprogramming of operating funds by a CIFP.

4.H.3.f SPC Data

CG-83 calculates AFC-30 SPC rates using cost data from the previous fiscal year. While SPC data used for out year RP projections are estimates assuming certain cost-of-living increases, SPC adjustments provided in the Source of Funds are based on the latest actual costs. Consequently, Source of Funds SPC adjustments may differ slightly from RP estimates.

4.H.4 Estimates

Personnel estimates for refund programs shall be based on standard personnel salary and support cost factors. All reimbursable agreements should specify remuneration to the Coast Guard for personnel services at the current rates for salaries and standard personnel support costs and any other relevant costs.

4.I Function of the Coast Guard Research and Development (R&D) Program

The R&D Program's sole responsibility is to improve the Coast Guard's performance by leveraging technology through partnerships within the Coast Guard and within the research community, by keeping the Coast Guard advised of high potential science and technology related opportunities, and by delivering quality, well-targeted research and development products.

4.J Research, Development, Testing and Evaluation (RDT&E) Appropriation

The RDT&E Appropriation was established and authorized by Congress as a specific appropriation for research, development, test, and evaluation of technologies, materials, and human factors directly relating to improving the performance of the Coast Guard's missions. It is important to be able to distinguish between RDT&E and other more general appropriations because the RDT&E appropriation is a specific appropriation. Federal Appropriations Law specifies that if a federal agency has a specific appropriation (such as RDT&E) for a particular budget item and also has a general appropriation (such as OE), which is broad enough to cover the same budget item, the specific appropriation must be used exclusively. Further, when two appropriations are available to fund a particular budget item (e.g. RDT&E and AC&I), neither of which specifies the item in question, the agency may elect which appropriation it wishes to use to fund that item. However, once it has made that election and has used the selected appropriation to fund that item, it cannot change its election or use the other appropriation to fund the same item in the future. Understanding both the nature and limits of the RDT&E appropriation is essential to make prudent technology investment decisions. A description of the function of the R&D Program and definitions of research, development, testing and evaluation are provided in chapter 5.

4.J.1 Exploit Emerging Technologies

The Commandant has declared his intent to exploit emerging technologies to move toward the vision of Coast Guard 2020. Attaining this vision requires appropriate integration of technology as part of the solutions that will close gaps in the performance of Coast Guard operations and missions. The R&D Program is adapting two of the best practices that have helped successful R&D programs maximize their return on investment: The use of an **Investment Portfolio Process** to concentrate R&D activities on significant performance gaps and the **New Product Gating** (NPG) process to help both the R&D Program and the entire Coast Guard make better decisions about the products we develop and use.

4.J.2 R&D Investment Portfolio Process

Reviewed and updated annually, this plan lays out how the R&D Program will respond to overall Coast Guard mission priorities. It will also describe identified Coast Guard performance gaps, future needs and projections about the future of technologies likely to affect the Coast Guard, and the Investment Areas (IAs; see next paragraph) the R&D Program will concentrate upon to address these concerns.

4.J.2.a Research and Development Portfolio

Using Program Business Plans, Regional Strategic Assessments, the Agency Capital Plan, the Coast Guard Strategy, DOT plans and other similar documents, the R&D Program has identified IAs that will move the Coast Guard ahead into the future, closing gaps in mission performance. While transition to this new portfolio concept is still being completed, most on-going R&D efforts now fall within one of these Investment Areas. The Investment Areas are meant to be exclusionary, so as to focus limited RDT&E funds on moving the Coast Guard ahead. Recent Investment Areas have included:

1. Detect, Identify, and Classify Marine Targets
2. Command Center Concept Exploration and Development
3. Risk Competency
4. Human Error Reduction/Fatigue
5. Interdiction Technologies
6. Aquatic Nuisance Species
7. Marine Environmental Response
8. Special Services

4.J.3 New Product Gating Process (NPG)

The R&D Program has recently adopted the NPG process, a systematic stage-gate process for the selection, execution and implementation of its products. The NPG process is a five-stage process covering R&D involvement in a product's lifecycle from conception through implementation. Although this is a process used by the R&D Program for new product development, active involvement by R&D customers, support program managers and decision-makers at all levels is needed to enable this process to deliver the maximum benefit for the Coast Guard. Implementation costs are ultimately borne by the customers and support program managers; their commitment is therefore assessed at each successive gate.

4.J.3 New Product Gating Process (NPG)
(Continued)

Each NPG stage is designed to gather the information needed to move the product to the next decision point. A go/kill decision gate precedes each stage. Each gate has two parts: an evaluation of the product against pre-defined criteria, and an evaluation of the product's merits against those of the other R&D products in progress. Gate criteria include (but are not limited to): strategic policy alignment; technical feasibility and risk; availability of necessary expertise; value to the Coast Guard; strength of customer and stakeholder commitment; and likelihood of Coast Guard acceptance and implementation. Use of the NPG process ensures that the portfolio of R&D product development efforts is systematically evaluated and judged to provide the best return for the Coast Guard's R&D investment.

These improvements are designed to complement the Coast Guard's newly emerging planning process and will allow us to integrate our R&D efforts within the context of an overall Coast Guard investment strategy. The success of the NPG process depends on the involvement of all key stakeholders throughout the product lifecycle; their participation is essential to the timely delivery of quality products. Customers access the R&D Program through an Idea Submission, which provides valuable information about customer needs and requirements, and feeds ideas into the NPG process.

4.J.4 R&D New Procedures for Selecting and Requesting Projects

The R&D Program has implemented simplified, more responsive procedures for suggesting/requesting and selecting projects. The goal of these new procedures is to encourage potential customers from throughout the Coast Guard to submit product ideas or request R&D assistance at any time. R&D Program Coordinators in the Office of Research, Development and Technology Management (CG-66) are available to provide assistance in this area. Other planning documents used include: DHS plans; The Coast Guard IT Plan; budget information; GPRA goals/guidance; the CG Strategic Plan; the Agency Capital Plan; information on CG Major Acquisitions; the C4ISR/OATP; Regional Strategic Assessments; and congressional guidance/mandates (Q&As, directives, etc.).

4.J.4.a R&D Idea - Request Submission Procedures

1. All Coast Guard personnel may submit requests for R&D assistance or R&D product ideas at any time using the Idea Submission format provided below. The idea request should be submitted to the R&D Program Manager (CG-66) with copies to the CO, R&D Center and the submitter's chain of command as necessary. The submission may take any written form (e-mail, letter, memo, etc) that is convenient for the submitter and acceptable to the submitter's chain of command.

2. Receipt of the submission prompts a NPG Gate 1 screening.

3. CG-66 will transmit the Gate 1 screening results to the submitter by the most expeditious means available (e-mail when possible). Feedback is typically provided within one month of the submission's receipt. Work on submissions that successfully pass the initial (Gate 1) screening begins immediately.

4. Idea Submission Format: (An example can be viewed on the Coast Guard web at: A sample memorandum containing the following: <http://cgweb.comdt.uscg.mil/g-sir/CG-66/ReqFormatNEW.doc>)

   (a). Problem Statement: A clear, concise statement of the problem or need requiring R&D support. Specify the desired/recommended performance improvement, and the related specific mission requirement. (This will be reviewed and refined at each stage of the NPG process.)

   (b). Idea: A brief description of the technology, product, investigation, model, etc (this portion is required only if the submitter is proposing a solution to the problem or need).

   (c). Benefit: A description of the expected impact on the Coast Guard if the problem was solved and/or the proposed idea was successfully developed and implemented.

4.J.4.b R&D Program Management

Several governing and administrative bodies have been established to provide direction, guidance and oversight for the R&D Program. The following paragraphs describe the responsibilities, functions and membership of each.

4.J.4.c R&D Investment Board

The R&D Investment Board (RDIB) provides senior management oversight to the work being carried out by the R&D Program. The RDIB meets annually in the Sept-Oct timeframe to approve the R&D Strategic Plan. The membership does not change. The RDIB will brief the Coast Guard Investment Board annually regarding R&D Program strategy and significant projects requiring OE/AC&I implementation/follow-on funding.

Members: R&D Program Director (CG-6 - Chair)
Planning/Resource Directors from:
- Acquisition (G-A-1)
- Marine Safety and Environmental Protection (G-MRP)
- Operations (G-OR)
- Systems (G-SR)
- Human Resources (G-WR)
- Office of Plans, Policy and Evaluation (G-CPP) representative.
- Deepwater Program Executive Office (G-D)
- Intelligence Directorate (G-C2)

Non-voting members: R&D Program Manager (CG-66)
- -CO, R&D Center
- -R&D Center Technical Director
- -Office of R&D Technical/Policy Advisor
- -Office of Programs (CG-82) R&D -
- -Program reviewer.

4.J.4.d R&D Management Board

The R&D Management Board (RDMB) meets quarterly to set and review the Program's strategic direction, goals, and overall business strategy, including the identification of broad investment areas that guide R&D Program investment decisions over a three to five year timeframe. Their decisions are based upon R&D customer feedback and analysis of the Regional Strategic Assessments, Headquarters Business Plans, the Agency Capital Plan, the Coast Guard Strategic Direction and the Annual Performance Plan. They also provide the RDIB with validation and/or recommended changes to the existing R&D Program Strategy.

Members: R&D Program Manager (CG-66 - Chair)
R&D Program Technical/Policy Advisor
R&D Program Resource Advisor
R&D Center Commanding Officer
R&D Center Technical Director
R&D Center Resource Director

4.J.4.e Portfolio Management Council

The Portfolio Management Council (PMC) meets monthly and is responsible for executing the RDMB's strategy. This is done by focusing the Program's resources into product lines within each investment area, establishing desired portfolio characteristics including a range of risk, projected return on investment, time to market, a mix of technology push vs. pull, etc., and by setting resource allocation targets. The PMC establishes criteria and methodologies for making investment decisions and distributes these criteria to R&D program staff, the Resource Allocation Council, customers, and other stakeholders. The PMC is charged with making high-cost Gate 2 and all Gate 3 and beyond investment decisions and with managing the R&D Program's portfolio to achieve the goals set by the RDMB.

Members: R&D Center Technical Director (Chair)
Office of R&D Technical/Policy Advisor
R&D Center Resource Director
R&D Center Management Analyst

4.J.4.f Resource Allocation Council

The Resource Allocation Council (RAC) meets on an Ad Hoc basis, but within two weeks of receiving recommendations from the New Product Council (NPC). The RAC approves and allocates resources to NPG process Gate 1 submissions and Gate 2 approvals, and provides funding status to the Portfolio Management Council for subsequent Gates.

Members: R&D Center Comptroller (Chair)
R&D Center Technical Division Chiefs (3)

4.J.4.g New Product Council

The NPC, which is made up of five senior technical staff members, meets ad hoc (within 30 days of Gate 1 submissions) to screen all ideas and products as they pass through NPG Gates 1 and 2 to ensure they meet established criteria. The NPC has "kill" authority at these early gates, and provides "go/kill" decisions and resource recommendations to the RAC, as well as Investment Area change recommendations to the PMC. The R&D Program Manager (CG-66) appoints members during August for a term of one year, to change each fiscal year.

Members: Two Headquarters R&D Program Coordinators
Three R&D Center Program Area Managers

4.J.4.h Headquarters R&D Program Coordinators

Each Headquarters Directorate has a designated R&D Program Coordinator (PC) in the Office of Research, Development and Technology Management. Each program coordinator provides initiative, technical knowledge and continuity necessary for the planning and direction of the pertinent technical aspects of the Coast Guard's Research and Development Program. When necessary the PC coordinates with the appropriate R&D Center Division Chief to facilitate project execution. The PCs maintain a broad knowledge of the R&D process, procedures, funding issues, and needs of sponsoring programs. This broad knowledge serves as the basis for developing R&D opportunities to leverage, cooperate, or coordinate within the R&D Program, the Coast Guard and with other agencies, states, countries, industries, or institutions.

This page intentionally left blank.

5.A Continuing Resolution - General

Enactment of appropriations might not occur at the onset of the fiscal year. In that case, Congress will usually, enact stopgap legislation known as a "Continuing Resolution" which permits affected agencies to operate at a specified program level for a specific calendar period.

5.A.1 Funding Levels

The exact level of operation depends upon a number of variables. In general, levels of operations existing during the fourth quarter of budget year continue. For appropriations on a project basis, those projects, which are essentially continuations of prior year programs (such as Waterways Aids, multi-year aircraft purchase, cutter rehabilitation program, etc.) and of a relatively high priority, continue. Unless OMB or the Treasury direct otherwise, CG-83 shall request full year warrants from the Treasury in amounts consistent with the provisions of the continuing resolution. OMB controls the funding available through the apportionment process. The Coast Guard's goal, within available funds, is to maintain "business-as-usual."

5.A.2 Additional Guidance

G-CCS will provide instructions for operating under a continuing resolution.

5.A.3 Government Shutdown

In the event Congress does not enact a continuing resolution and otherwise fails to appropriate funds, a government shutdown (or "funding hiatus") may occur.

5.B Apportionment Process

Apportionment is the distribution of amounts available from an appropriation by OMB to a federal agency. Appropriations enacted are generally not available for use by an agency until OMB makes an apportionment. Apportionments may divide amounts available for obligation by specific time periods, activities, projects, objects, or a combination thereof. Apportionment based on specific time periods is the usual.

OMB generally requires apportionment of pay, compensation and benefits on a quarterly basis. For other activities OMB will consider other time periods if such periods will better facilitate budget execution without reducing their oversight. Normally, Coast Guard apportionments will not be for longer than one year. However, certain appropriations have funds

5.B Apportionment Process- General (Continued)

available for more than one year. For these funds, the estimated un-obligated funds to be carried over into the budget year must be listed in the initial budget year apportionment requests for the next budget year. Certification of the actual amount of carryover occurs in November. At that time, FINCEN certifies the un-obligated balances remaining as correct.

5.B.1 Apportionment Time Periods

New apportionment action for a fiscal year is independent of all apportionment actions of the preceding year. Subsequent reapportionment action including that necessitated by the enactment of legislation providing additional budget authority will supersede previous apportionment action taken during the year and will cover all transactions from the beginning of the fiscal year.

5.B.2 Apportionment Supporting Financial Plans

The law requires that appropriation managers apportion and reapportion funds to prevent the obligation or expenditure of these funds in a manner that would indicate the necessity for a deficiency or supplemental appropriation. Apportionments must take into consideration any legal limitations, which Congress imposes. Appropriation managers will support apportionments with financial plans using a careful forecast of obligations for the programs or operations planned during the year. For the OE and RT appropriations, experience in past years is a useful guide in determining quarterly apportionments of financial plans. The apportionment should make provision for seasonal or similar variations in fiscal requirements.

5.B.3 Reapportionment

CG-83 prepares a reapportionment request and submits it to OMB whenever a change in a previous apportionment is necessary due to changes in appropriations, such as supplemental funding or rescissions. Submission of a reapportionment request in order to meet programmatic demands is not a common occurrence and must usually be accompanied by a formal request to reprogram budget authority.

CG-83 submits a reapportionment schedule to OMB if the un-obligated balance brought forward, as shown on the initial apportionment schedule, differs from the certified un-obligated balance by $200K or one percent of the new budget authority, whichever is greater.

5.B.4 Deficiency Apportionments

In certain cases, the law governing apportionments (31 U.S.C. §1515) permits agencies to reapportion their funds on a "deficiency" basis in anticipation of a supplemental appropriation. The most common reason for doing this is a pay raise for which added funds are needed early in the year. This is accomplished by apportioning funds for the first three quarters as if supplemental funds have been appropriated, leaving a deficiency in the fourth quarter.

5.B.4.a Unforeseen Costs

Unforeseen costs incurred as a result of an act of Congress or the President may necessitate a deficiency apportionment.

5.B.4.b Recommend Deficiency Apportionment Under the Anti-Deficiency Act

G-CCS, upon the recommendation of CG-83, makes the decision to submit a deficiency apportionment. To qualify, the apportionment must:

1. Be for a purpose permitted by law and
2. Enactment of supplemental appropriations in the amount of the deficiency must be a reasonable assumption. However, a financial risk exists because OMB approval of a deficiency apportionment does not guarantee that Congress will appropriate the amount requested.

5.B.5 Deferrals

OMB may temporarily withhold available budget resources from obligation, with the intention of apportioning them for use later in the fiscal year, before they expire.

OMB must submit a report on the deferral amount to Congress. However, either the House or Congress may overturn a deferral at any time by passing an impoundment resolution disapproving the deferral. If Congress takes no action to disapprove reported deferrals, they remain in effect until the end of the fiscal year.

5.B.6 Rescissions

The consequence of enacted legislation that conceals budget authority previously provided by Congress before the time when the authority would otherwise lapse (i.e., cease to be available for obligation). Furthermore, the President can determine that the full objective or scope of programs do not require all of the budget authority available.

5.B.6 Rescissions (Continued)

OMB submits a report to Congress that details the funds under rescission. Congress must pass a law agreeing to the rescission. Funds under rescission become available for obligation if both houses of Congress do not pass such legislation within 45 calendar days of continuous session.

5.C Appropriations - General Rules

The proper analysis of appropriations issues rests on an analysis of the appropriation's purpose, time and amount commonly referred to as the "PTA" analysis.

5.C.1 Appropriations Applications

"Appropriations shall be applied only to the objects for which the appropriations were made except as otherwise provided by law." The "Purpose Statute," 31 U.S.C. §1301(a).

5.C.2 Expense

Where Congress' intent is specific, there are usually no issues. For example, if Congress states that, "the Commandant shall transfer $5,800,000 to the City of Homer, Alaska, for the construction of a municipal pier and other harbor improvements"; the intent of Congress is plain. However, in general appropriations, such as the Coast Guard OE appropriation, specific guidance is lacking. In this case, the "necessary expense" rule is used. For an expenditure to be justified under this rule, three tests must be met:

a. The expenditure must make a direct contribution to carrying out an authorized Coast Guard function.

b. Law must not prohibit the expenditure.

c. The expenditure must not be otherwise provided for; that is, it must not be for an item falling within the scope of some other specific appropriation.

5.C.3 Appropriations and Obligations

Under the Anti-Deficiency Act (31 U.S.C. § 1341), government officials cannot make payments, or commit the United States government to make payments at some future time, for goods or services unless funds are available in the affected appropriation to cover the full cost.

5.C.4 Specific vs. General Appropriations

If a federal agency has a specific appropriation for a particular purpose, and also has a general appropriation, which is broad enough to cover the same purpose, the specific appropriation must be used exclusively unless a statutory exception is applicable.

5.C.5 Two Appropriations for Same Purpose

When it is determined by an agency that two appropriations are available for a particular purpose neither of which specifies the purpose in question, the agency may elect which appropriation it wishes to use. However, once it has made that election and has in fact used the selected appropriation, it cannot change its election or use the other appropriation.

5.C.6 Time and the "Bona Fide Needs" Rule

Appropriations are available for obligation in one of three ways and they are available for obligation only in a specific fiscal year (fiscal-year funds); for multiple years, up to five consecutive years (multiple-year funds); or they are available "until expended" (no-year funds). A fiscal year appropriation may be obligated only to meet a legitimate, or **bona fide**, need arising in, or in some cases arising prior to but continuing to exist in, the fiscal year or years for which the appropriation was made." **The bona fide** needs rule applies to multiple-year as well as fiscal year appropriations. In other words, the Coast Guard may use a multiple-year appropriation for needs arising at any time during the period of availability.

5.C.7 Congressionally Directed Projects

Congressionally directed projects may require special consideration as to funding source and are to be handled on a case-by-case basis.

5.C.8 Execution Proposal Procedures

a. Congressional committee reports are not law. These committee reports, such as those accompanying a DHS appropriations act, may include language recommending an allocation or earmark of funds for a specific Coast Guard project. The project may be executed if a specific law (*e.g.,* a provision in the actual language of the appropriations act or other public law) authorizes the recommended expenditure of the earmarked funds. G-LGL shall determine whether the law in question authorizes the recommended expenditure.

b. If there is no specific law that authorizes the expenditure recommended in the committee report language, the expenditure of the earmarked funds may be authorized if a general legal basis can be found to otherwise support the expenditure, usually through the Comptroller General's "necessary expense" doctrine. G-LGL shall determine whether there is a legal basis to support the recommended expenditure.

5.C.8
Execution Proposal Procedures
(Continued)

c. If there is neither a specific law nor other legally supportable basis, then the recommended expenditure cannot be made. G-LGL and CG-83 shall be consulted to explore alternative strategies for meeting the committee's intention.

d. The Execution Proposal (EP) is used to support the expenditure of earmarked funds in execution of a congressional committee recommendation. The EP is designed to provide the analysis and documentation, which will enable CG-8 to make informed decisions regarding committee recommended projects. The EP shall include G-LGL legal sufficiency determination.

e. EPs are a rare exception that is used when the normal planning proposal process cannot be used within the normal budget cycle. As an exceptional process, guidance for carrying out specific EPs will be provided by CG-83 on a case-by-case basis.

5.D
Statutory and Administrative Ceilings - Ceilings in the Authorization Process

Each year's authorization contains specific levels for end-of-year active duty military strength. The Assistant Commandant for Human Resources (G-W) manages the active duty strength based on the Military Employment Capability Plan (MECP). The Selected Reserve strength enacted in the DOD Authorization Act identifies the "maximum" authorized strength of the Coast Guard Selected Reserve. It requires the Director of Human Resources Management (G-WR) to maintain the selected reserve strength (within that maximum) at a number that can be fully trained at the funding level appropriated.

5.D.1
Civilian Employment Ceilings

Coast Guard budget allowances for the budget year usually include full time equivalent (FTE) ceilings on full time permanent civilian employment. Civilian part-time and temporary employees receive a separate FTE allowance. In no case may the ceiling in the "all other" category be used for additional full time employment. However, increases to the FTE ceiling for part-time and temporary employment can come from the full time FTE ceiling. An FTE ceiling represents the total number of work years that an agency may incur in each category. One work year is 2087. Additionally, the OMB and Congressional Stage allowances normally include an update of the current year ceiling. The

5.D.1
Civilian Employment Ceilings
(Continued)

Office of the Secretary for Department of Transportation (M-l) issues this ceiling to the Programs Division. G-CPA allocates FTE to districts and Headquarters units. DHS and the Office of Personnel (M-10) receive a monthly report detailing civilian employment.

5.D.1.a
Interim Ceilings and Hiring Constraints

In addition to the OMB-imposed 30 September ceiling, it is possible that the Secretary might wish to impose more restrictive controls. This may be in the form of hiring constraints (3 for 4 etc.) or total employment targets for other than 30 September. M-1 manages these targets, and CG-8 allocates the amount received. As far as the Coast Guard is concerned, both ceilings are equally binding, but the opportunity for relief from departmental imposed ceilings is obviously greater.

5.D.2
Cash Outlay Ceilings

Cash Outlay ceilings are additional administrative controls that OMB can impose. This is normally received as a total ceiling for all appropriations and funds. Updates occur upon receipt of budget year allowances, and after Congressional action on pay supplemental and regular appropriations. CG-83 is responsible for outlay estimates, allocation of ceilings to various appropriations, and periodic reports to the DHS. CG-8 establishes controls when necessary.

Outlay ceilings are a subdivision of a statutory ceiling imposed on the executive branch by Congress. The Coast Guard must request authority from DHS in order to exceed outlay ceilings.

5.D.3
Other Ceilings in Appropriation Language - Passenger Vehicles

Current appropriation language limits the number of passenger vehicles the Coast Guard may purchase each year whether for replacement or new acquisition. The definition of passenger vehicles includes sedans, station wagons, ambulances, and buses. A vehicle transferred from another federal government department constitutes a purchase. A detailed explanation of the Coast Guard vehicle program is in the Motor Vehicle Manual, COMDTINST M11240.9 (series).

5.D.3.a
Operation of Aircraft

The number of aircraft, including helicopters that the Coast Guard may operate during a fiscal year comes from the current appropriation language. This limitation does not include aircrafts in storage but does include those "support" aircrafts, which are used to replace aircrafts withdrawn from air units for overhaul or other purposes. The Assistant Commandant for Operations (G-O) is responsible for managing this ceiling.

5.D.4
Ceilings in DOD Appropriation Language - Dependent Schooling Overseas

Title 14 U.S.C. § 657 includes a provision authorizing payment of tuition for overseas dependents in primary and secondary schools under specified conditions at costs not greater than those of the DOD for the same area. DOD administratively determines this ceiling. Commander, Coast Guard Personnel Command is responsible for liaison with DOD and enforcement of this limitation.

5.D.5
Federal Debt Ceiling Restrictions

31 U.S.C. § 3101 establishes the maximum amount the federal government may borrow to discharge its obligations (commonly referred to as the "debt ceiling"). When this maximum amount has been reached, the federal government may not borrow additional money to meet its payment obligations. This may affect the Coast Guard's ability to make payments, incur obligations or hire employees. Should such a situation exist, G-CCS will issue an ALCOAST directing appropriate action.

5.D.6
Travel and Other Ceilings

Administrative ceilings frequently govern travel and other administrative costs. Policies and procedures related to ceilings will be provided in conjunction with the directive establishing the ceiling.

5.E
Key Terminology

1. "Obligation" - The legal requirement to pay the amounts of orders placed, contracts awarded, services received, and similar transactions. Any act that legally binds the government to make payment creates an obligation.

2. "Commitment" - The administrative determination that funds are available to create an obligation. A commitment formally reserves the funds in anticipation of a specific obligation.

5.E
Key Terminology
(Continued)

3. "Expenditure" - A payment made to liquidate an obligation.

4. "Available balance" - The remaining un-obligated funds.

5.E.1
Administrative Commitments

Procurement requests or contracts pending award by a contracting officer are administrative commitments. Commitments occur at the time that an administrative action occurs towards an obligating event, such as approving a purchase request or contract. This, in effect, "ties up" the money, even though there is no legal obligation against the government. Commitments are not legal obligations and count as un-obligated balances in monthly reports to the OMB. Keep administrative commitments to a minimum.

5.E.2
Legal Obligations

The formal award of purchase orders, requisitions, and contracts constitutes legal obligations. Anticipated bills for travel expenses, salaries, and compensation, electrical, and telephone services, and other services received on a continuing basis for which estimates based upon past experience are made also incur legal obligations. Sometimes the award is "subject to availability of funds" in which case the obligation is deferred until funds are available.

5.F
Anti-Deficiency Act Violations - Over Obligation of Funds Prohibited

Personnel authorized to administer and control funds are responsible for seeing that funds expended or obligated do not exceed the amount allotted to them. This requirement is specifically spelled out by law and requires reporting action, as well as corrective action, in the event of a violation. Statutory requirements are as follows:

a. 31 U.S.C. §1341(a)(1) "An officer or employee of the United States Government ... may not:

   (1) make or authorize an expenditure or obligation exceeding an amount available in an appropriation or fund for the expenditure or obligation.

   (2) involve the government in a contract or obligation for the payment of money before an appropriation is made unless authorized by law."

5.F
Anti-Deficiency Act Violations - Over Obligation of Funds Prohibited
(Continued)

b. 31-U.S.C. §1342 "An officer or employee of the United States Government may not accept voluntary services for the government or employ personal services exceeding that authorized by law except for emergencies involving the safety of human life or the protection of property. "

c. 31-U.S.C. §1350 "An officer or employee of the United States Government or of the District of Columbia government knowingly and willfully violating section 1341(a) or 1342 of this title shall be fined not more than $5,000, imprisoned for not more than two years, or both."

d. 31-U.S.C. §1351 "If an officer or employee of an executive agency violates section 1341(a) or 1342 of this title, the head of the agency shall report immediately to the President and Congress all relevant facts and a statement of actions taken. "

e. 31-U.S.C. §1513(d) "An appropriation apportioned under this subchapter may be divided and subdivided administratively within the limits of the apportionment. "

f. 31-U.S.C. §1513(d) "The head of each executive agency shall prescribe by regulation a system of administrative control not inconsistent with accounting procedures prescribed under law. The system shall be designed to:

(1) Restrict obligations or expenditures from each appropriation to the amount of apportionments or reapportionments of the appropriation.

(2) Enable the official or the head of the executive agency to fix responsibility for an obligation or expenditure exceeding an apportionment or reapportionment. "

5.F
Anti-Deficiency Act Violations - Over Obligation of Funds Prohibited
(Continued)

g. 31-U.S.C. §1517(a) "An officer or employee of the United States Government ... may not make or authorize an expenditure or obligation exceeding:

   (1) An apportionment.

   (2) The amount permitted by regulations prescribed under section 1514(a) of this title. "

h. 31-U.S.C. §1517(b) "If an officer or employee of an executive agency violates subsection (a) of this section, the head of the executive agency shall report immediately to the President and Congress all relevant facts and a statement of actions taken. "

i. 31-U.S.C. §1517(a), 1517(b), 1351 of the law apply to direct allotments as well as to appropriation totals, apportionments, and reapportionments. It does not apply to AFC's and targets.

5.F.1
Exceeding Target Reporting

When obligations incurred exceed the annual target and local actions to reduce obligations are insufficient, the financial manager of the target unit is responsible for prompt reporting to the appropriation manager. The unit financial manager will prepare the report immediately after it has been established that this condition exists. Temporarily exceeding administrative operating or project targets, while necessitating disciplinary action if the circumstances warrant, may not constitute a violation of the Anti-Deficiency Act.

5.F.1.a
Financial Manager Prepares the Report

The financial manager of the target unit shall prepare the report on the basis of accounting records and documents on file at the ATU. The report will include:

1. A description of the administrative operating or project target.

2. Related details and the amount involved.

3. An explanation of all pertinent facts concerning the excess and the principal reason or cause.

4. A statement on the adequacy of the control system or recommendations for changing the control system.

5.F.2 Anti-Deficiency Violations Reporting

It shall be the primary responsibility of CG-8 to initiate written reports to Congress of actual violations of the Anti-Deficiency Act, except for the Yard and the Cadet Funds. The Comptrollers of the Yard and Academy shall initiate reports on the Yard and Cadet Funds, respectively. However, any employee of the Coast Guard having knowledge of an apparent violation shall be responsible for initiating a written report through the appropriate channels. In all instances the report from the field shall be addressed to the fund manager with copies to G-CCS, and CG-8 (as the CFO). The appropriation manager will immediately initiate an investigation to determine if, in fact, a violation did occur. A description of fund violations and the external reporting requirements are contained in paragraph S. Department of Transportation Order 2700.7 (series). The Commandant shall report to the Secretary, through the Assistant Secretary for Administration, **immediately** after it has been established that a violation has occurred and shall also send a copy of the report to the Assistant Secretary for Budget and Programs.

5.G Reports - Reports of Budget Execution

FINCEN shall prepare the monthly "Report of Budget Execution" (SF-133), with copies sent to CG-83, and CG-84 within 20 days of the end of the month, as required by OMB Circular A-11.

5.G.1 Program Element Status

FINCEN provides Program Element Status (PES) reports to all program element managers. It is the responsibility of the ATUs to insure that their respective accounts are reconciled against the PES reports within one week of receiving the reports.

5.G.2 Other Reports

FINCEN also prepares regular reports for CG-83 on the status of all AFCs and each ATU. CG-83 reviews these reports, and communicates directly with those ATUs whose reports show a significant variance from prescribed policy, historic trends or spending plans. CG-83 monitors the status of accounts by AFC, ATU and appropriation for five years after an appropriation expires; letter reports are sent to those ATU/AFC managers who are significantly over or under obligated.

5.H Control Of Year End Spending

Year round management of funds is an essential element of good financial management. The tendency to make large year-end procurements is not only an indication of poor or mismanagement of funds, but a poor reflection on the Coast Guard and funds manager as well. The following policy is intended to minimize funding of low priority projects or buildups of inventories solely to prevent expiration of funds.

Obligations for the fourth quarter of the fiscal year shall not normally exceed obligations for the third quarter. Exceptions to this general rule include: procurements required to accomplish an essential program objective, seasonal requirements, or restoration of a program, which has slipped behind schedule. Care and timeliness in obligation, reprogramming, and releasing of funds will ensure effective use of funds.

5.I Reimbursable and Refund Programs - Purpose

This section establishes the policy relating to intra-governmental and other reimbursable programs covering goods and services **provided by** the Coast Guard to other DHS elements, federal agencies and non-federal activities. This section does not apply to instances where the Coast Guard **procures** goods or services from other federal agencies. Such situations involve procurement actions, and will be processed through procurement channels because they involve the obligation of funds, which may only be done by individuals having contracting authority.

a. The Economy Act (31 U.S.C. § 1535) provides that any agency, if funds are available and if it is determined to be in the interests of the government, may place orders with another agency for materials, supplies, equipment, work or services of any kind and shall pay promptly to such agency upon written request.

b. Title 14, United States Code states, “The Coast Guard may, when so requested by proper authority, utilize its personnel and facilities to assist any federal agency, state territory, possession, or political subdivision thereof, or the District of Columbia, to perform any activity for which such personnel and facilities are especially qualified. The Commandant may

5.I Reimbursable and Refund Programs – Purpose
(Continued)

prescribe conditions, including reimbursement, under which personnel and facilities may be provided under this subsection."

c. Generally, when the assistance rendered falls within the specific functional responsibilities of the Coast Guard, the services are performed without charge. **Note:** the authority only applies to cooperation with other governmental agencies, state or federal and not to private organizations. Written agreements with foreign governments or international organizations must be processed through a duly appointed representative of the Department of State and coordinated with the Coast Guard's International Affairs Staff (G-CI).

5.I.1 Reimbursable Agreements - Policies

Program managers shall establish reimbursable programs on the basis of written agreements prepared prior to providing goods and services. However, in emergency situations, the Coast Guard may perform work in the absence of a signed agreement, provided the program manager negotiates a written agreement as soon as possible. Such written agreements are also required for all reimbursable activities performed for other DHS operating agencies; however, reimbursable activities are not applicable to general working agreements or orders placed with the DHS Working Capital Fund. Agreements shall meet the following conditions:

a. The nature of the reimbursable work shall be consistent with the purpose and policies of the Coast Guard.

b. Program managers shall negotiate reimbursable agreements within the framework of the Coast Guard' s appropriations structure.

5.I.1.a Finance Services

Program managers will finance services rendered and goods furnished from reimbursable appropriations subject to reimbursement for both federal and non-federal activities, unless circumstances warrant financing through advance of funds. To the extent authorized by law, they will apply the same method of financing to non-federal activities; however, program managers shall require advances in instances where there is any doubt concerning the collectability of the reimbursable charges.

5.I.1.b Reimbursable Work/ Intrinsic Value

The nature of the reimbursable work must have intrinsic value to the Coast Guard at least equivalent to that which Coast Guard appropriations would otherwise be used. In this respect, it should be kept in mind that diversion for reimbursable work may deny the use of those personnel or resources for Coast Guard work.

5.I.1.c Procedures

The Coast Guard receives reimbursable agreements in various forms, including Military Interdepartmental Requests (MIPRs), Interdepartmental Procurement Requests (IPRs), MOUs and MOAs. Reimbursable agreements impacting all appropriations other than the OE appropriation must be approved by CG-83.

Reimbursable agreements impacting the OE appropriation will be processed as follows:

1. Reimbursables less than $100k in value may be accepted by the ATU commander and processed directly through FINCEN. FINCEN will provide CG-83 with monthly reports of reimbursable agreements processed directly between ATUs and FINCEN.

2. Headquarters programs and units shall process all reimbursables through CG-83.

3. All reimbursables over $100k shall be routed through the applicable Headquarters program and CG-83 for approval.

5.I.1.d Recovery of Costs

It is federal policy to recover all costs incurred in furnishing goods or services applicable to the reimbursable agreement. The cost computation shall cover direct and indirect costs incurred in carrying out the activity. Agreements with non-federal government organizations shall be written to include costs and charges for space, depreciation and interest; however, agreements with federal government organizations shall not include space, depreciation, and interest costs. Where personnel are provided on a reimbursable basis, the reimbursable agreement shall provide funding sufficient to cover costs for the personnel directly authorized for the program as well as indirect personnel needed for pipeline billets (training, personnel in transit, etc.) to support the reimbursable program. These costs are the SPC computed and published by CG-83.

5.I.1.e Identification of Costs

Program managers shall identify costs wherever possible through the accounting system. Where the accounting system is not readily adaptable to identifying costs, program managers shall establish a simplified procedure to identify costs. They shall avoid excessive details and unnecessary refinements in the accounting records. For example, program managers may use a factor to recover indirect costs when that factor in this notice is the current overhead rate, which represents the relationship of support to operating programs.

Program managers approximate what the costs would be under a formal system. Commandant Notice 7310 (series) contains standard rates for major types of units and other miscellaneous equipment, which are to be used in computing reimbursable charges. Managers using this notice shall apply it to recover the administrative overhead costs attributable to the direct services provided. In cases where personnel are provided on a reimbursable basis, the sponsoring activity shall provide funding in an amount equal to the SPC.

5.I.1.f Waiver of Costs

Program managers shall not waive the costs of providing goods and services except as authorized by law. Only officials authorized to approve reimbursable agreements have the authority to waive costs. Waivers may be granted under the following conditions:

1. Collection costs would be an unduly large part of the funds from the receiving activity.

2. The furnishing of the service without charge would be an appropriate courtesy to a foreign country or international organization; or comparable costs are on a reciprocal basis with a foreign country.

3. Comparable costs are on a reciprocal basis; or

4. The services provided are clearly to the benefit of the Coast Guard mission.

5.I.2 Preparation and Coordination of Agreements

All Coast Guard reimbursable agreements will be guided by DHS Interim Management Directive (IMB) 0710. Program managers preparing reimbursable agreements should use DHS Form 710-1 (11-03), DHS Reimbursable Agreement. Program managers may use a letter or MOU, but such documents must contain essentially the same information as the DHS Form 710-1 (11-03). However, program managers should use DHS Form 710-1 (11-03) as a fact sheet in instances where a letter or memorandum is used. Reimbursable agreements prepared by a party other than the Coast Guard may be made using other forms as long as they contain essentially the same information as the DHS Form 710-1 (11-03).

5.I.2.a Draft and Clearance

Cognizant headquarters offices are responsible for conducting negotiations and drafting proposed agreements.

5.I.3 Reimbursement to the OE Appropriation

Generally, the reimbursable programs, which are carried out under the OE appropriation, are those concerned with the operation or maintenance of facilities, which are of benefit to another agency. Maintenance of Navy-owned equipment on Coast Guard units is one example.

5.I.3.a Sponsoring Agencies

Each reimbursable account prior to distribution of the draft OPSTAGE sponsoring agencies develops reimbursable programs through conferences and individual discussions followed by correspondence to fix decisions, agreements and estimates of costs. Finally, a sponsoring agency would forward an IPR or the equivalent to the Coast Guard. The Coast Guard must return the IPR showing signed acceptance under the conditions and amount stated. The process of developing and inaugurating these programs or changes in programs generally require extensive staff coordination to ensure that cognizant offices are kept aware of the negotiating process. Toward this end, responsibilities at Headquarters for negotiating and managing the several reimbursable programs are assigned on the following basis.

5.I.3.a.(1) Established Operating Programs

Established operating programs carried out from year to year, which involve AFC managers in different offices. The program manager will assume responsibility for drafting correspondence external to the Coast Guard via CG-8.

5.I.3.a.(2) Operating/Support Program Managers

Operating/Support Program Managers responsible for the reimbursable programs shall identify and develop base level resources and provide guidance to the ATU. The ATUs shall in turn submit detailed funding requests for the reimbursable field programs per the Planning and Programming Manual - Volume II (Field Planning Manual), COMDTINST M16010.6

5.I.3.a.(3) The Budget Office

CG-83 shall solicit both quarterly and annual AFC distributions for each reimbursable account prior to distribution of the OPSTAGE draft in the Spring and again prior to the approval of the final OPSTAGE. CG-83 will publish the specific amounts in the OPSTAGE financial plan.

5.I.3.a.(4) Program Mangers of Established Operating Programs

Program managers of established operating programs that are carried out from year to year, involving only one AFC manager, such as medical supplies and maintenance of Navy-owned electronic equipment, have the responsibility for drafting correspondence external to the Coast Guard relative to funds or other requirements.

5.I.3.a.(5) Interdepartmental Procurement Requests

The office having primary responsibility for onetime programs requiring engineering evaluation, such as Loran-C evaluations, or joint oceanographic surveys, will assume responsibility for drafting correspondence external to the Coast Guard relative to funds or other requirements.

Programs receiving IPR advanced billing reimbursable agreements from other agencies, which indicate the work requested of the Coast Guard and funds available for such work, should transmit them to CG-83. CG-83 will verify the request against previous correspondence, coordinate with other offices concerned to adjust the financial plan, accept the work order for the Coast Guard, and furnish copies of correspondence with the signed IPE agreement to permit the rendering of proper bills to the requesting agency. It is the responsibility of the Headquarters program or Headquarters unit to return copies of the accepted agreements to the external parties and initiate any CIFPs necessary to execute the agreement.

5.I.3.b Cost Estimates

When cost estimates have been agreed on, they are consolidated by CG-83, and the appropriation manager adds an estimate for anticipated, yet unconfirmed reimbursements. The total estimated reimbursement to OE is entered in the OMB Stage budget as a separate item from the direct appropriation requested from Congress. CG-83 revises this estimate at the Congressional and OPSTAGE. **Note:** that the estimated reimbursable program shown in the budget document does not have to be justified in that document, since it is not in itself a request for funds. The reimbursable funds are justified in the sponsoring agencies' budgets.

5.I.3.c Budget Office Reimbursement

CG-83 distributes most of the OE reimbursements to the regular OE AFC's, which will incur expenses in carrying out the reimbursable programs. Program managers must submit a CIFP reflecting an AFC distribution when they establish a new reimbursable program. When AFC managers are advised of their allocations and are requested to recommend the quarterly apportionments of these funds, they are dealing with their total allocations including reimbursements, which will remain at the AFC-80 level. The apportionment request submitted to OMB by CG-83 does not specifically itemize or identify the reimbursable portion of the quarterly apportionments. The appropriation manager must approve all reimbursable CIFP's. A copy of the signed, accepted reimbursable agreement or purchase request must be on file in CG-83 and must accompany the CIFP. Program managers will provide a copy of the approved CIFP with supporting justification to CG-83.

5.I.3.d Reimbursement to AFC-80

Obligation authority to finance reimbursable work for other government agencies and non-government entities is requested and received from OMB during the apportionment process. Once approved by OMB, these funds are set up in AFC-80 in the amount of the anticipated annual reimbursement. Unlike other AFCs, AFC-77 does not consist of direct appropriated funds. Rather, they contain the value of anticipated or actual reimbursement for work authorized to be done for others on a reimbursable basis.

5.I.4 Reimbursements to Other Appropriations

The reimbursable programs under the AC&I appropriation usually involve the construction of facilities for the benefit of other agencies and the application of proceeds from the sale of personal property to acquire its replacement. RDT&E reimbursements usually represent cooperative research programs involving government or nonprofit civil agencies.

5.I.4.a AC&I Reimbursements

CG-83 develops estimates for reimbursable programs under the AC&I appropriation. These estimates are included in the OMB stage of the budget as a separate item from the direct appropriation request. CG-83 revises these estimates as required at subsequent budget stages. Like the OE reimbursement, the AC&I reimbursement is not justified in the Coast Guard budget since it is not a request for appropriations. Estimates for RDT&E are handled in a similar fashion.

5.I.4.b Research and Development Staff

The Research and Development Staff (CG-66) for RDT&E and CG-83 for AC&I, maintain the reimbursable programs as separate projects. Accordingly, the office developing a reimbursable agreement under these appropriations prepares a financial plan and quarterly obligation schedule for each reimbursable project. From these schedules, CG-83 prepares the apportionment request for submission to the OMB. Directly appropriated funds and reimbursable funds are both listed on the apportionment request, as separate line items.

5.I.4.c Establishing Accounts

CG-83 establishes an account for the total amount of reimbursement expected throughout the year for each appropriation, titled "anticipated reimbursements." CG-83 provides project account numbers for each reimbursable agreement. To establish separate project accounts from which obligations may be made, CG-83 prepares a CIFP (CG-3319) showing an amount to be decreased in the "anticipated reimbursements" account and increased under the reimbursable project account. CG-83 must approve all reimbursable CIFP's. A copy of the signed, accepted reimbursable agreement or purchase request must accompany the CIFP.

5.I.5 Financing and Billing Arrangements

In order to assure that the agreement is in sufficient detail for the accounting office to perform the billing, the agreement shall:

a. Identify the accounting office serving the performing activity as the billing office.

b. Contain a "BILL TO" address in sufficient detail to provide the accounting office with an address to which a bill may be sent for collection.

c. Indicate the specific goods or services to be furnished.

d. Identify the charges, the method of computation, the billing period, and the estimated cost.

e. Establish beginning and ending dates.

f. Provide for an advance of funds.

g. Identify the documentation required by the user agency as a condition of payment.

h. Establish the activity responsible for the accomplishment of the project.

i. In the event multiple items are to be furnished, the agreement should provide for separate identification of each item.

5.I.5.a In Doubt of Paying Ability

Whenever the performing activity intends to fund a program on a reimbursable basis and doubts the paying ability of the ordering activity (non-federal organization), they will indicate on the agreement that an advance of funds is necessary for the entire cost of the project. An advance installment basis of payments may also be satisfactory depending on the circumstances.

5.I.5.b Agreements Between DHS and Operating Elements

Agreements between DHS and operating elements are normally done on a reimbursable basis. Activities entering into agreements are encouraged to obtain assistance from their accounting and budget offices to establish a mutually acceptable and simple arrangement.

5.I.5.c Performing Activity

The performing activity shall furnish its accounting office the following information and documentation:

1. A listing of all organizations authorized to provide goods and services under the specific agreement. Performing activities must list the applicable agreement number and the name and telephone number of the project officer of the performing activity.

2. Lead and collateral organizations will prepare and furnish cost estimates to the appropriate accounting office. These estimates shall include but are not limited to lists of such items as number of work hours, kinds of contractual services, purchases of equipment, and identification of each element of overhead.

3. During the course of the agreement, the performing activity shall review all documentation developed by it or furnished by collateral organizations prior to submission to the accounting office to ensure that reference to the agreement number is included.

4. Notification in writing, within ten workdays after completion of work, that the terms of the agreement have been satisfied. If feasible, this notification shall be furnished concurrently with the submission of the final documentation.

5. The accounting office of the performing activity shall develop and assign numbers to the agreements. Assignment of numbers shall be performed after the agreement is signed and prior to the distribution of the agreements. A consecutive numbering system is required.

5.I.5.c
Performing Activity
(Continued)

6. The accounting office of the performing activity will expedite final billings, including any adjustments necessary to conform to the terms of the agreement, and collections. It will be the responsibility of the performing activity to notify its accounting office and furnish documentation immediately upon completion of work.

5.I.6
Distribution of Agreements

In addition to local distribution of agreements, program manager will forward executed copies to CG-83, and FINCEN (OGQ).

5.I.7
Revisions and Amendments

Sponsoring agencies will prepare written amendments to agreements if there are any changes in the goods and services provided. The nature of the changes should be explained in detail. Program managers will prepare CIFPs to reflect any changes in the amount of the agreement.

The agreement shall specify a date of expiration, or indicate that it remains effective indefinitely. In either case, program managers in conjunction with CG-83 will reexamine reimbursable agreements every five years and renegotiate as required any changes necessary to ensure their accuracy.

5.I.8
Refund Program - Policies

Each appropriation shall provide funds to cover all costs (including pay, allowances and certain related support costs) generated by its operations. **"Cross subsidizing" of one appropriation by another is strictly prohibited**.

5.I.8.a
Fully Fund Coast Guard Facilities

Coast Guard appropriations will fully fund Coast Guard facilities, in support of that appropriation, such as the RDT&E appropriation support of the R&D Center.

5.I.8.b
Appropriations Fund Coast Guard Facilities

Appropriations will fund Coast Guard facilities, which are committed to support two or more appropriations (such as the training center) according to their proportional use of the facility. Affected appropriation managers will negotiate the basis of the funding split. Parties to this agreement will review and renegotiate it every two years as necessary.

5.I.8.c
Charges

The OE, AC&I, RT, EC&R, BS and RDT&E budgets shall include funds for the pay, allowances and the related personnel support costs of personnel assigned to authorized billets/positions of that appropriation. Where possible these costs shall be charged directly to the cognizant appropriation.

5.I.8.d Intra-Coast Guard Refund Account

When a direct charge is not possible, a refund to the OE appropriation is executed through the Intra-Coast Guard Refund Account. Unless actual costs can be determined, program managers will base personnel estimates on the SPC, or other similar methods. Appropriation managers shall make onetime nonrecurring refunds equal to the applicable SPC for newly acquired billets/positions.

5.I.9 Refund Program Procedures/Military Pay and Allowances

FINCEN will charge all non-industrial military pay and allowances to the OE appropriation (AFC-01).

AC&I, EC&R, BS, RT and RDT&E shall refund pay and allowances equal to the average SPC for each authorized billet plus an amount equal to the estimated cost of subsequent pay raises not included in the SPC. Normally, OMB will not allow a supplemental appropriation for subsequent pay raises. Nevertheless, appropriation managers shall make refunds to AFC-01 equal to the SPC for each authorized billet plus the cost of subsequent actual pay raises not included in the SPC. Appropriation managers shall prorate funding according to the cost of part year billets.

5.I.9.a Civilian Salaries

FINCEN charges the salaries of civilian personnel directly to the applicable appropriation and no refund is required.

5.I.9.b Personnel Support Costs (PSC)

The AC&I, RT, EC&R, and RDT&E appropriations shall fund personnel related support costs for permanent change of station travel, operating and maintenance support and training on the basis of published SPC. SPC costs shall be reimbursed annually to AFC-20, AFC-30, AFC-56, and AFC-57 for each authorized billet and position except where the parent appropriation will make direct payments for support costs. In this case, when specific items within the SPCs do not apply for particular units or categories of personnel, the amount of the refund will be adjusted to account for direct payments as mutually agreed upon by the cognizant appropriation managers. The RT appropriation shall base the PSC costs on current fiscal year refund agreement. Contact the program manager for the current agreement.

5.I.9.c Documentation

CG-83 will show the required amounts for pay and allowances and related personnel support costs in the refund section of the OPSTAGE financial plan. When the level of the refund program changes during the fiscal year due to changes in SPCs or changes in authorized billet levels, the refunding appropriation manager shall initiate a CIFP reflecting the proper funds distribution. CIFPs, which affect any refund allotment fund control (AFC) accounts, must be routed through CG-83 in addition to the affected appropriation and AFC managers.

CG-83 reviews all CIFPs to ensure consistency between the refunding and OE appropriations financial plans.

Program managers should complete the refund process as soon as costs are determined but not later than the end of the second quarter for pay and allowance (SPC) funds.

5.J Operating Expenses - Military and Civilian Pay/General

No funds are provided directly to ATUs for AFC-01, Military Pay and Allowances; AFC-08, Civilian Salaried Personnel; or AFC-98, Reserve Program Civilian Personnel (or multi-year appropriation pay accounts). Funding for military personnel is handled through the Pay and Personnel Center.

5.J.1 Upgrade of Civilian Positions

ATUs desiring to upgrade a civilian position are required to provide recurring funds to the AFC-08 account to cover the increased costs resulting from the upgrade. The upgrade will be approved only after these additional funds have been provided. This upgrade policy does not apply to Headquarters mandated civilian position upgrades.

5.J.2 Overtime for Civilian Employees - Classified Employees-OE

Overtime for civilian employees is authorized and administered in accordance with the criteria set forth in Management of Civilian Overtime, COMDTINST 12550.4 (series). ATUs must comply, and CG-831 will review other personnel directives subject to an overall annual monetary limitation for those employees funded from AFC-08 as prescribed in Management of Civilian Overtime, COMDTINST 12550.4 (series). ATUs must comply with annual AFC-08 overtime ceilings; failure to comply will subject an ATU to a withdrawal or reduction of OE funds. Additional guidance on administration of civilian overtime is provided in Commandant Publication P12000.2 (series), Civilian Personnel Guides for Supervisors.

5.J.2.a Wage Grade Board Employees -OE

All funding (pay, benefits and overtime) for civilian wage grade employees is centralized in AFC-08. Any "on budge" increases or decreases to wage grade funds reflected in AFC-08 are included in the wage grade funding provided each ATU. When an ATU exceeds the total allocated wage grade funding, regardless of the level of FTE consumed, additional funding must come from the ATU's operating funds base.

5.J.2.b AC&I Funded Employees

Overtime for civilian employees whose salaries are charged to AC&I Administrative Expenses Funds are subject to the limitations in Management of Civilian Overtime, COMDTINST 12550.4 (series).

5.J.2.c RT and RDT&E Funded Employees

Overtime for civilian employees whose salaries are charged to RT and RDT&E, must be approved by G-WTR and Assistant Commandant for Command, Control, Communications, Computers, and Information Technology respectively.

5.J.2.d Yard Fund Employees

Overtime for civilian employees funded by the Yard Fund shall be approved by the commanding officer, Coast Guard Yard.

5.J.3 Non-Pay Cost Of Living (COL) Funding

Non-pay COL funds are received in appropriations from Congress to cover price increases affecting non-pay items. These funds are provided to fund increased costs of current operation. Increases above these amounts must be absorbed from available funds. COL is computed by applying the Bureau of Labor statistics index measuring the cost of federal goods and services to the non-pay portion of the Coast Guard OE appropriation.

5.J.3.a Cost of Living Funds

COL funds must be carefully matched with price increases over the long term. There have been fiscal years when no price increases were incurred for such items as fuel and TAD, followed by years when price increases for these items far exceeded the annual COL funding level. COL funds should be managed over the multi-year period to allow for these fluctuations. Further, AFC managers should note that the index is a "market-basket" measurement such that higher inflationary increases in certain commodities are offset by below average increases in others.

COL funds are not intended for and should not be used to fund new or expanded programs of a recurring nature.

5.J.4 Adjustments to Initial Funding -Purpose

It is normal and appropriate that during the course of a fiscal year or project life, circumstances change or more information becomes available, necessitating a change in the initial distribution of funds made by OPSTAGE and subsequent source of funds.

Procedures and approval authority for adjustments to initial funding have been developed in an attempt to balance the need for centralized oversight and decentralized management. Within the OE appropriation, there are two types of adjustments to initial funding:

a. The first type of adjusting document is a CIFP. A CIFP is used to shift funds between two or more AFCs. An example would be funds earmarked for electronic support in AFC-42 that needs to be shifted to AFC-30 to support an AFC-30 funded electronics support contract. Enclosure (5-1) provides the signature authorities necessary to approve a CIFP.

b. The second type of adjusting document is a FTA, which distributes funds from one ATU or account to another within an AFC. For instance, if supplemental AFC-30 funds were to be provided by a Headquarters office to a district for cleanup after a hurricane, the transfer would be accomplished with a FTA. Both CIFP's and FTAs can be executed on a recurring basis, in which case they are annualized into the funding base of the ATUs/AFC's involved.

CG-83 is responsible for final processing of FTAs. FTAs are processed using the Automated Funds transfer System (AFTS). Prior to submission to CG-83, it is the responsibility of the originating office to have on file the proper approval/signatures of all offices affected allowing for electronic processing. By placing a person's name on the automated funds transfer entry, the initiating office is indicating that the person has approved the funds transfer. After all approvals are received, forward the fund transfer request to CG-832 for processing. Upon completion of processing, copies of the completed FTA will be electronically sent to all programs providing and receiving funds. All email users will inform CG-832 of any changes to their respective mail center names.

5.J.4
Adjustments to Initial Funding -Purpose
(Continued)

All center administrators should set up an electronic mailbox named APTS/"center name". CG-832 sponsors an AFTS Users Guide (See this publication or contact CG-832 for additional information).

5.J.5
Financial Plan Adjustment Authority

The approved OPSTAGE financial plan forms the basis for the Coast Guard's annual obligation plan. The OPSTAGE reflects the Commandant's resource allocation decisions from the budget formulation stage, endorsement of these decisions by DHS and OMB in the budget submission process, and approval by the President and Congress through enactment of appropriations. Changes to the OPSTAGE must be consistent with these decisions. Significant changes in scope or cancellation of a program, project or activity require approval from the Commandant and in some instances, concurrence by Congress. In addition, funds for certain programs or projects are "earmarked" by Congress and cannot be reprogrammed without specific, advance approval. Transfer authorization procedures, designed to provide a framework for making changes to the OPSTAGE financial plan, are intended to provide internal flexibility while responding to external constraints.

5.J.6
Adjustments Between a Target

OE financial plan funds are allocated by AFC in the OPSTAGE and are summarized by office in an annual Source of Funds. The appropriation manager must approve all transfers between AFCs. In general, the AFC manager reviews transfers between program elements within the same AFC.

Recurring and nonrecurring adjustments are to be submitted by program managers to CG-83, on a CIFP (CG-3319) via the relevant appropriations manager for annotation of serial number and approval. A copy of the approved form shall be forwarded by CG-83 to CG-82.

5.J.7
ATU Funding Adjustments/New Initiatives or Requirements

New initiatives or requirements should be funded by analyzing current spend plans, reprioritizing activities and reallocating funds from within the ATU’s base whenever possible. Contingency funds should be used solely for unanticipated requirements.

5.J.7.a Additional AFC-30 Funding

If additional AFC-30 funding is required to continue reasonable operations, the necessary amount can only be obtained by adjusting annual spend plans and/or using funds from other AFCs. These efforts should be coordinated with the responsible AFC or the appropriation manager. Only after all funds available to the target unit have been critically examined, should a request for additional funds be made to Headquarters. Enclosure (5-2) is a sample-funding request.

5.J.7.b Coordination

Appropriation managers will coordinate correspondence from areas, MLCs, districts and Headquarters units involving the management or adequacy of funds. Offices to whom correspondence is referred will coordinate the appropriate reply, which will be routed for signature to the appropriation manager or designee. Where a request for funds is granted, the reply should take the form of a FTA. It is expected that the reply will be released within 10 working days after receipt by the action office. Types of requests include the following:

1. Appeals to Initial Target - A full detailed analysis and response should be prepared for each appeal.

2. Letter Requests for Additional Funds - The appropriation manager will forward these letters to the action office for preparation of a letter response and/or FTA.

3. Message Requests for Additional Funds - All message requests for funds will be sent for action to the appropriation manager. The cognizant AFC and program manager will receive an information copy.

5.J.8 Adjustments Between ATUs

During the fiscal year, changed conditions may require fund transfers between different ATUs. Shifts between ATUs and recurring base changes between all AFCs (except intra-Coast Guard refund and reimbursables) shall be processed as described below.

5.J.8.a Transfers Between ATUs If Between AFCs

The requester on a CIFP, if between AFCs, shall originate transfers between ATUs. The CIFP must display the approval of all AFC managers involved and shall be submitted with full justifications (background documentation and references) to CG-83. CIFPs that do not clearly provide full justification will be returned to the originator for resubmission.

The target manager releasing the funds shall submit a memo to the AFC manager requesting the transfer of funds.

5.J.8.b Minimum Field Requests

District and MLC ATUs will absorb fund requirements under $500. Headquarters will normally not process requests for amounts below this amount unless the ATU fully justifies the need and an inability to absorb that amount.

5.J.9 Target Modification

Target Modification Preparation. Headquarters divisions desiring to adjust field targets shall complete Form CGHQ-3200, Financial Transfer Authority (FTA), and route it to the AFC manager(s).

5.J.9.a Target Modification Restrictions

Frequent modification of field targets is discouraged. Maximum distribution of available funds after publication of the final OPSTAGE financial plan should result in minimum follow-on adjustment.

5.J.9.b Minimum Target Modification

The minimum target modification that will be processed is $500. AFC managers may accumulate adjustments for lesser amounts and issue one consolidated FTA.

5.J.9.c Alternatives to FTAs

Administrative alternatives to FTAs should be used in lieu of frequent target adjustments. For example, assignment of a travel order number chargeable to a Headquarters account is a less complex procedure than issuance of a FTA to accomplish the same objective.

5.J.10 Additional Funds Requirements

When a requirement for additional funds in an ATU arises because of emergencies or program changes, the following actions shall be taken in sequence.

5.J.10.a Adjust Financial Plans

Review the elements or programs under the ATU in which a change in requirements arise and, if possible, rearrange priorities for accomplishment. This review and realignment should first be made within the AFC.

5.J.10.b Variance Funds Between AFCs

If funds are not available within the AFC, the ATU budget officer, based upon guidance from the Budget Review Board, shall review and recommend revisions to programs within other AFCs. The ATU must request authorization from the AFC and appropriation managers to variance between AFCs. All variances will be effected via a CIFP approved as outlined earlier in this section.

5.J.10.c Un-funded OE Requirements Under $10,000

ATU budgets have expanded in size to the point that un-funded OE requirements up to $10,000 can and should be absorbed in the current year within available funds at the district. Therefore, funding requests submitted to Headquarters under $10,000 in each OE AFC will not be processed. For Headquarters ATUs, requirements up to $5,000 can and should be absorbed in the current year within available funds at the Headquarters unit.

5.J.10.d Fund Requests to Headquarters

If a review indicates that no items can be deferred or reduced in scope, the ATU may request additional funds from the cognizant program manager. A program manager who is unable to fund the request from within the existing funding base will seek the funding from G-CCS.

5.J.11 Permanently Switching Funds

Although the vast majority of adjustments between AFCs are non-recurring, occasions may arise when it is desirable to permanently change the method of supporting a program by permanently switching funds between AFCs.

5.J.11.a Recurring Base Changes

Such a recurring base change between AFCs will be treated as a non-recurring change during the current fiscal year. A letter shall be sent to the appropriation manager outlining the reasons for the recommended adjustment. If approved, the appropriation manager will respond accordingly, by issuing a CIFP and annualizing the change in the following year's Final OPSTAGE.

5.J.12 Transfer of Units Between Districts

When operating units are permanently transferred, ATUs should take the following action to permit adjustment of allotted fund:

a. Action by Losing ATU- Determine the amount of un-obligated funds remaining in the current year and the annualized amount for operation and maintenance of the unit being transferred. Submit a letter to CG-83, via the gaining ATU (with an information copy to the cognizant Headquarters program manager), stating the amount of funds available for release by AFC and quarter.

b. Action by Gaining ATU - Endorse letter from the losing administrative target unit indicating the sufficiency of the proposed funds transfer, both current year and annualized. CG-83 will adjust targeted funds of losing and gaining ATUs based upon this letter after consultation with appropriate Headquarters AFC and program managers.

5.J.13 Reporting Excess Funds in OE

Operating/Support managers responsible for executing specific line items in the OPSTAGE financial plan shall immediately inform the appropriation manager of any circumstances precluding total obligation of available funds for the project in the current fiscal year. The appropriation manager will inform CG-8 and G-CCS that funds cannot be obligated within the appropriation.

5.J.14 Carryover Criteria/Execution of the Financial Plan

It is important that financial plans be executed to meet obligation criteria. Not meeting the quarterly obligation target reflects poorly on sound management. Not meeting the obligation criteria at the end of the third quarter places a large burden on the procurement system, increases the possibility the funds will not be obligated before the end of the fiscal year, and may violate section 5.H. which requires that fourth quarter obligations not exceed obligations for the third quarter.

5.J.14.a Obligation Criteria

Un-obligated balances less than the following for non-pay funds are considered excessive unless the appropriation manager has granted an exemption. The only exceptions to these obligation rates are for pay and depot level maintenance accounts

1. Twenty five percent of the cumulative ATUs non-pay fiscal year funding level at the end of the first quarter.

2. Fifty percent of the cumulative ATU, no-pay fiscal year funding level at the end of the second quarter.

3. Seventy five percent of the cumulative ATUs non-pay fiscal year funding level at the end of the third quarter.

5.J.14.b Depot Level Maintenance Accounts

Un-obligated balances less than the following are considered excessive unless an exemption has been granted by the appropriation manager:

1. Fifteen percent of the cumulative ATUs non-pay fiscal funding level at the end of the first quarter.

2. Forty percent of the cumulative ATUs non-pay fiscal year funding level at the end of the second quarter, and,

3. Sixty percent of the cumulative ATUs non-pay fiscal year funding level at the end of the third quarter.

Anticipated carryovers greater than these amounts shall be reported to the appropriation manager at least 30 days prior to the end of the quarter with a request that they be allocated. On the advice of the appropriation manager, CG-8 may direct the withdrawal of actual carryover funds greater than these amounts and reprogram the funds elsewhere. Should OMB choose to apportion Coast Guard funds in such a way that execution of the obligation rates contained herein is not practical, the appropriation manager may issue alternate obligation guidance through the applicable AFC managers.

5.J.14.c Formal Administrative Comments

Formal administrative commitments are not legal obligations and, if not converted to a formal obligation by the end of the quarter, represent a carryover of funds.

5.J.15 Report of Un-obligated Balances

As soon as possible after the end of each quarter, CG-83 will prepare a report of un-obligated balances by ATU, including Headquarters offices. This report will be used by the appropriation manager as the management tool for supervising timely use of funds and deciding on disposition of excess carryover.

5.J.16 Operating Expense Closeout

Review the status of AFC accounts and ensure all Program Element Status (PES) Reports are reconciled: If errors are occurring within PES of over $1,000.00 as of 30 August, they must be reconciled and forwarded to FINCEN NLT COB 15 September. Ensure commitments in pipeline are executable, open obligations are valid, and cancel obligations or commitments where necessary. Provide updates through 30 September of the current fiscal year for any material changes. If there are any questions or if you are in need of assistance, contact CG-832 and/or the FINCEN.

Ensure all procurements during fourth quarter reflect the highest priority needs for your ATU; Refer to FRMM 5.H. Return unused funds for other Coast Guard top priorities. Returning funds at the end of the current fiscal year will not affect future sources of funds.

All ATUs and Headquarter offices shall report anticipated end of year balances by the second Friday in September to GG-832 and inform AFC managers as appropriate:
AFC-20, 56 and 57: CG-1
AFC-01, 08 and 30: CG-83
AFC 41/43/45:G-SRM
AFC 42: CG-6R

Funds transfers will be suspended as of COB on the second Friday in September. Contact Headquarter programs if any transfers will need to occur after that date.

Transactions to include the following procurement types must be obligated by COB 30 September and included in the FPD submission sent by 1500 EDT 1 October.

- Contracts
- MIPRS
- ISSAS
- Travel Orders
- Fuel Purchases
- Any other Purchase Orders

5.J.16
Operating Expense Closeout (Continued)

Funds Managers must manage funds that have expired for obligation purposes. Program Element Managers will be required to reconcile the previous fiscal year's PES reports until the account is closed and should ensure that all PES reports are reviewed until all UDOs and ATUs have been expended or canceled. PES reports for FY99 and later are available via the FINCEN web site at http://cgweb.fincen.uscg.mil/pesweb/index.htm.

Pipeline Management
Headquarter Offices, ATUs, and units must maintain appropriate documentation to support year-end certification reports filed with the FINCEN. The Department of Homeland Security (DHS) will audit the Coast Guard's legal obligations that were executed on or before 30 September but were not recorded in CGOF when the books were closed on 30 September. Documentation must be kept locally for review by the audit team as part of an unqualified opinion as required by the CFO Act.

5.J.17
Review Status of AFC Accounts

Review the status of AFC accounts and ensure all PES reports are reconciled. If errors are occurring within PES for over $1000,00 as of 30 August, they must be reconciled and forwarded to FINCEN NLT COB 15 September. Ensure commitments in pipeline are executable, open obligations are valid, and cancel obligations or commitments where necessary. Provide updates through 30 September of the current fiscal year for any material changes. If there are any questions of if you are in need of assistance contact CG-832 and/or FINCEN.

5.K
Use of OE Funds

Many questions arise concerning the propriety of using funds (both appropriated and non-appropriated OE and NAF) to accomplish the various missions of the Coast Guard. Procurement officials and those in supervisory and command positions must be aware that the consequence of using Coast Guard funds inappropriately could lead to a member or employee being held **personally** responsible for commitments and purchases made by them. For this reason, any question of whether a contemplated action is appropriate must be resolved prior to entering any agreement that commits (or appears to commit) the Coast Guard to payment. Procurement officials and others shall seek the advice of the following personnel, in the order presented, to ensure actions are legitimate, and legal, prior to any action taken:

5.K
Use of OE Funds
(Continued)

Unit Contracting Officer
Unit Supply Officer/Comptroller
Chief of Contracting Office for unit
Area Procurement Analyst at the MLC
Chief of Contracting Office at the MLC
CG-843

Procurement officials should ensure that written guidance is received for questionable procurements and include that guidance in the procurement files.

Additional guidance is available from the following sources:

1. GAO publication Principles of Federal Appropriations Law. This five volume set is available from the GPO or via the internet at: http://www.gao.gov

2. CG-843 web page, located on the Coast Guard Intranet. This page will be updated as issues arise.

The following information is provided on selected expense topics that have been the subject of previous Comptroller General decisions or policy discussions within the Coast Guard. This list however is not all-inclusive, and additional guidance should be sought as stated above when questions or uncertainty arise.

5.K.1
Awards and Recognition

The Coast Guard provides recognition in a variety of circumstances, both internal and external to the Coast Guard. The use of appropriated funds is authorized for the formal or informal presentations of medals, plaques, certificates, pins, *etc.,* as long as the purchase and presentation are accomplished in compliance with published directives as stated below.

The same is true of cash awards when expressly authorized. Similarly, awards may also be granted for a variety of specific reasons as authorized by other approved instructions.

5.K.1.a Formal Recognition

Guidance for formal recognition of Coast Guard personnel is contained in the following references:

1. **Military and Civilian Personnel:** Military and Civilian award programs are described in Medals and Awards Manual, COMDTINST M1650.25 (series).
2. **Civilian Personnel:** Civilian award programs are also described in the Coast Guard Civilian Awards Manual, COMDINST 12451.1 (series).
3. **NAF Employees:** NAF Employee award programs are described in the Non-appropriated Fund (NAF) Personnel Manual, COMDTINST M12271.1 (series).
4. **Auxiliary Personnel:** Auxiliary award programs are described in the Auxiliary Manual, COMDTINST M16790.1 (series).

5.K.1.b Informal Recognition

14 USC § 503 provides for informal recognition of Coast Guard employees. Informal recognition is authorized to recognize **individuals, groups, or teams in a manner less structured than formal recognition**. In order to use appropriated funds for informal recognition, the award must meet the following three criteria:

1. Be non-monetary in nature (except for authorized cash awards such as savings bonds)
2. Be of nominal value (less than $100)
3. Be linked to excellence in performance or a special contribution to the Coast Guard

Informal recognition shall not be used to recognize individuals simply for belonging to a group (*i.e.* onboard a unit for a pre-selected amount of time, completing a tour at a unit or mere participation in a "wellness event"). All informal recognition programs must be authorized in writing and stipulate:

1. Performance goals to be met
2. Nominating procedures
3. Awarding authority
4. Frequency
5. The item to be awarded

5.K.1.b
Informal Recognition
(Continued)

The Commanding Officer/Unit Commander **must** sign all instructions establishing recognition programs. All items awarded **must** be of nominal value (less than $100), **contain the Agency (CG) seal,** and have an obvious honor or award connotation. Unit logos or seals may also be included. The following examples are provided as a guide, however this list is not all-inclusive:

Authorized:
1. Soul of the Service Award
2. Golden Wrench Award
3. Making a difference medallion

Not Authorized:
1. Tour completion items.
2. Awards that are so easily achievable that the majority of the unit or other organizational element will attain the award
3. Items (e.g. t-shirts, water bottles, etc.) that signify mere participation in a wellness event.

5.K.1.b.(1)
Retirement Recognition

Additional authorization is provided to allow unit to present a retiring member assigned to their command with an item of *nominal value* (less than $100) to recognize their contribution to the service and the country. *Items must be non-monetary and convey pride and honor to the recipient*. Items to be considered may include, but are not limited to: Plaques (wall, desk, or shadow box), pen sets, desk medallions, certificates etc. **Discretion should be used when selecting an item for retirement recognition. Gifts (i.e., golf clubs, deck chairs, clothing items) are NOT AUTHORIZED and shall not be purchased with appropriated funds.**

5.K.1.c
External Recognition
14 U.S.C. § 93 (w)

14 U.S.C. § 93 (w) empowers the Commandant to "provide for the honorary recognition of individuals and organizations that **significantly contribute** to Coast Guard programs, missions, or operations, including state and local governments and commercial and nonprofit organizations, and pay for, using any appropriations or funds available to the Coast Guard, plaques, medals, trophies, badges, and similar items to acknowledge such contribution (including reasonable expenses of ceremony and presentation)." **The purpose of honorary recognition is to recognize past support to the Coast Guard mission**.

5.K.1.c
External Recognition
14 U.S.C. § 93 (w)
(Continued)

The costs of honorary recognition will generally be charged to unit AFC-30 funds. However, other sources of funds may be used, as appropriate(e.g.., DOT R&R funds).

5.K.1.c.(1)
Eligible recipients

Consistent with the recipients expressly named in 14 U.S.C. §93(w), individual, for purposes of this statute, is interpreted as also including foreign individuals and government agencies, as well as family members of deceased former Coast Guard members, dignitaries, high public officials, and others consistent with the intended recognition.

5.K.1.c.(2)
Delegation

Authority is hereby delegated to approve recognition ceremonies and presentations in accordance with this policy to G-CCS, all headquarters assistant commandants and directors, area commanders, MLC commanders, the Superintendent of the Coast Guard Academy, and district commanders. Further delegations must be authorized in writing; however additional limitations and controls are encouraged.

5.K.1.c.(3)
Monetary Limits

Presentation Item: Items presented in recognition of significant contributions to the Coast Guard must be of minimal value. In order to maintain parity between what the Coast Guard can accept (as defined later in this chapter) and what it can present, the presentation item must be of nominal (or minimal) value. 'Minimal value' is defined, for all purposes of this section, in 5 U.S.C. § 7342(a)(5)(A). This law currently defines 'minimal value' as $260.00 or less (as adjusted every three years by the Administrator of General Services, to reflect changes in the consumer price index). More than one presentation item is authorized provided the nominal value is not exceeded in the aggregate. The item(s) must be in good taste and suitable to the occasion. Where an award recognizes the significant contribution of an organization, the dollar limit will be applied to the organizational award. In no case will the dollar limit be applied to each individual member of the organization recognized.

5.K.1.c.(3) Monetary Limits (Continued)

Presentation Ceremonies: The cost associated with ceremonies and presentations are authorized charges against appropriated funds. This includes facility rentals, equipment, and light refreshments. Refreshments shall be limited to light snacks and beverages, and shall not provide the appearance of a meal. The total amount of funds expended for ceremony and presentation costs are limited to $10,000 annually for each flag level command and Headquarters directorate listed in the delegations paragraph. In addition, if authority is further delegated as authorized, the total amount of funds expended annually by each unit below the district level is limited to one percent of their AFC-30 appropriation or $10,000 whichever is less.

5.K.1.c.(4) Frequency of award ceremonies and presentations

A significant contribution shall only be recognized once. Programs created to recognize contributions on a periodic basis must be supported by written instruction approved by the district commander or above.

5.K.1.c.(5) Accounting

In order to monitor the use of this authority, all procurement actions accomplished for this purpose shall utilize the following object codes.

2690 - Mementos and Awards - Supplies presented in recognition of significant contributions to the Coast Guard under the authority of 14 U.S.C. § 93 (w).

2560 - Ceremonies and Presentations - Services provided in recognition of significant contributions to the Coast Guard under the authority of 14 U.S.C. § 93 (w).

5.K.1.c.(6) Documentation

Unit files **shall** contain, at a minimum, the following information for future auditing:

a. Name of recipient
b. Action or service provided to qualify for recognition
c. Complete cross-reference list of other procurement files associated with same recognition (i.e., document number of memento procurement listed in presentation procurement folder).

5.K.1.c.(7) Waivers

Requests for waivers from this policy will only be granted for extraordinary circumstances. Requests must be submitted through the chain of command to CG-843.

5.K.1.c.(8) Prohibited items

The following items may not be purchased under external recognition authority:

a. Cash and other monetary items (gift certificates, stocks, savings bonds, meal tickets, etc.).
b. Items associated with a member's retirement.
c. Items purchased for official ceremonies (i.e., change of command, ship christening, ground breaking, etc).
d. Items shall not be presented for work related to a contract, grant, cooperative agreement or other arrangement funded by the government. It may be possible to recognize parties to such arrangements, or their personnel, for other contributions by means of the waiver provision set forth above.

Alcoholic beverages are not authorized for purchase with OE funds under this section.

5.K.1.c.(9) Appearances

In all cases, each unit must use discretion, avoid the appearance of impropriety, and exercise good fiscal stewardship, especially in times of fiscal austerity.

5.K.1.d External Recognition - Official Reception and Representation (R&R) Funds

Congress specifically appropriates these funds annually for the purpose of establishing and maintaining relationships of value to the department and to the United States. These funds are extremely limited and their use is governed by Homeland Management Directive 0540. The purpose of R&R funds is to build future relations that will benefit the Coast Guard in the performance of its mission.

5.K.1.e External Recognition XXF Funds

These representational funds are non-appropriated funds. As such, their use is not bound by the same rules as appropriated funds. These funds may be used for recognition and other purposes as stated in the instruction "Rules and Regulations, Coast Guard Trust Funds." This instruction is distributed to all authorized funds users, and is available through CG-843.

5.K.2 Bottled Water

Bottled or potable water cannot be purchased using appropriated funds unless a local health official determines the water is unfit due to medical or sanitary reasons. The local health official must be a government health department laboratory (non-Coast Guard). Tainted, discolored and odorous water is not a basis for authorizing the purchase of bottled water.

As stated in the GAO's decision (B-147622 12/7/61), bottled water may be purchased with appropriated funds only on the grounds of necessity which include:

a. No potable water is available within 200 feet of the place where people normally work.

b. Water is contaminated.

c. There is an urgent need for water that could not otherwise be met.

5.K.3 Business Cards or Information Cards

Printing business cards either commercially or utilizing GPO, is not authorized except in those rare cases where a specific statutory authority exists (i.e. Recruiters and Academy Admissions Officials).

Business cards may be produced in-house when a Commanding Officer has determined that the cards are necessary to perform official duties and to facilitate mission related business communications (as distinct from the extension of a social or business courtesy).

Local production of cards will use CG standard computer hardware and software on perforated card stock that may be obtained with unit appropriated funds using standard unit procurement procedures and policies. CG-6 is currently creating a standard CG Macro that shall be utilized when available.

All locally produced cards shall comply with the following standards. Deviations are not authorized.

White or Ivory card stock 50 –110 pound
(non- glossy. No matte finish)
(NSN 7530-01-425-6754 or 7530-01-449-6946

5.K.3
Business Cards or Information Cards
(Continued)

or equivalent)
Finish size of 3-1/2 by 2 inches
Print one side only
No additional artwork, symbols, or information is authorized
Finish size of 3-1/2 by 2 inches
Print one side only
No additional artwork, symbols, or information is authorized

Sample Business Card

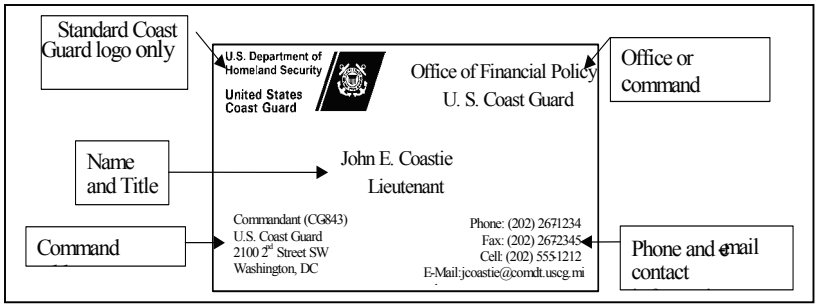

Personally Procured cards: Business cards purchased with personal funds may be of any design as long as they convey favorably upon the Coast Guard as a professional Government Agency. The cost of cards purchased with personal funds may not be reimbursed with appropriated funds.

Use of DHS Logo: Any business cards that contain the DHS logo shall comply with DHS Management Directives 0030 and 0570.

5.K.4
Cable/Satellite TV Service

The use of appropriated funds to pay for subscription services for cable or satellite TV service is permissible only under the following circumstances:

a. The service **must** be viewable in general areas, such as rec decks, lounges, wardroom, and not individual offices.

5.K.4 Cable/Satellite TV Service (Continued)

b. The subscription must be limited to basic and three (3) premium stations/services. Premium stations/services are defined as those stations or services that are not included in the most basic service agreement offered. They normally include such services as dedicated movie channels, channels of special interest (children's programming, history or technology related programming, sports programming) and sports packages (services that give access to all games within a season, or packages that provide expanded sports coverage beyond the basic level service). Payment for these services **shall not** be made in advance.

The following stations/services are not authorized to be purchased with OE funds:

a. Movie and special event viewing paid per event/daily basis.

b. Payment for adult entertainment stations where the content is sexually related.

NOTE: Advance payment for cable and satellite services is **not authorized** and units shall exercise care to ensure compliance with 31 U.S.C. § 3324(a). (B-237789 12/10/99)

5.K.5 Change of Command Expenses

See 5.K.27 Traditional Ceremonies for guidance on the use of appropriated funds for change of command expenses. Additional guidance associated with mailing of items may be found in Coast Guard Postal Manual, COMDTINST M5110.1 (series).

5.K.6 Chaplain Support

The Coast Guard is obligated to support the chaplains that are assigned to the service and the valuable work that they accomplish. The manual, Religious Ministries within The United States Coast Guard, COMDTINST M1730.4 (series) provide applicable guidance concerning support of the Coast Guard Chaplain Corps.

5.K.7 Coffee Mess, Picnic Supplies and Equipment

The use of appropriated funds to procure coffee pots, microwaves, refrigerators, or other equipment, as well as supplies, such as plates, flatware, and condiments, for messes or picnics, is not authorized, unless the items are in support of an approved dining facility (CGDF), or meet the exception noted below.

The use of appropriated funds to purchase mess type equipment (coffee pots, small microwaves, refrigerators) may be authorized if **all** of the following conditions are present:

a. The facility or space is in operation seven days a week, 24 hours a day, and

b. The employees must be continuously available during an eight hour shift, and

c. There are no other eating facilities available nearby.

Ample documentation and certification must be contained in unit procurement files and readily available for audit purposes.

5.K.8 Conference Planning

Planning for a Coast Guard sponsored conference must be done correctly in order to avoid improper use of appropriated funds. Conference planners **shall** ensure they are familiar with all aspects of the conference such as attendees, subject matter, agenda, etc., as well as the rules and regulations surrounding conference planning. Some references to consider are:

a. Joint Federal Travel Regulations (JFTR), including, but not limited to U1050, U2550 part G, U2555, U3500.

b. Federal Travel Regulations (FTR), including, but not limited to C1060, C4410, C4552.

c. DOT Travel Guiding Principles, Part 301-16 – Conference Planning.

All conference planners shall ensure the following restrictions are adhered to:

5.K.8
Conference Planning
(Continued)

a. Attendees at a conference held within the attendee's permanent duty station (PDS) are ineligible for **per diem** for lodging and meals.

b. The cost of government-contracted meals (if any) shall not exceed the applicable per diem rate. (JFTR U2550.D.3)

c. Records shall be kept of efforts to reduce costs by seeking less-costly facilities. (JFTR U2550 H.1)

d. Lodging, in conjunction with a conference, may **not** be procured by government contract within the confines of Washington D.C. Attendees may, however, rent rooms and receive reimbursement by filing a travel voucher. (See 40 U.S.C. § 34.) (JFTR U2550 H.1)

NOTE: See section 5.K.10.b concerning internally organized meetings, conferences, and workshops.

5.K.9
Emergency Evacuation Funds

Information for the emergency evacuation of dependants is included in the following references: Joint Federal Travel Regulations, Chapter 6, Coast Guard supplement to the JFTR (chapter 6), and the HRSIC website concerning evacuation assistance. Information concerning Emergency Evacuation for Civilian employees and their dependents is contained in 5 CFR 550.401-408, and FTR Chapter 301-30.

Evacuation Funding Procedures: ATUs will provide TONO issuing guidance to the affected units, initially fund all travel expenses from local AFC-30 accounts, and ensure that evacuation orders mandate use of government quarters (if available).

1. ATUs must use local accounting strings with the following:
    a. Cost Center: **79872**
    b. Object Class: **2108**

5.K.9 Emergency Evacuation Funds (Continued)

Reimbursement Procedures: Reimbursement will be made only after competent authority such as Area, District, MLC Commanders, or designated representatives authorize a full or limited evacuation (when advised by a local or national authority to do so). Reimbursement is subject to funds availability in the HQ storms account. Dependents are eligible for evacuation allowances as per above references. Civilian Employees and their dependents are eligible for reimbursement of their travel expenses due to authorized evacuations.

Timeline: ATUs will complete a single request per event within 30 days of the termination of the evacuation order. It is the responsibility of the ATU's to notify CG-832 and G-WPM-2 via message or email whenever evacuations are authorized.

Points of Contact: Contact G-WPM-2 for any questions concerning active military personnel, G-WPC-1 for civilian personnel, and G-WTR-1 for reserve military personnel.

5.K.10 Flowers

Appropriated funds may be used to purchase flowers under the following circumstances:

Traditional Ceremonies: Floral centerpieces may be purchased for traditional ceremonies. Traditional ceremonies include, ground breaking, change of command, change of homeport, building dedications, graduation, vessel commissioning/decommissioning, and wreath laying for National Veteran Commemorations. Receptions held in conjunction with traditional ceremonies are separate events and XXF funds (which are only available to a small number of units) or personal funds must be used to fund most items for them. Flowers used as decoration at a reception held in conjunction with a traditional ceremony or flowers given to participants or their family members are not allowed.

Decorative Items: The Federal Property Management Regulations (41 CFR 101-26.103-2) permits the purchase of pictures, objects of art, plants, flowers (both artificial and real) and other similar items as decorative items when furnishing federal buildings. Such items may be purchased for general use areas and may not be purchased solely for the personal convenience or to satisfy the personal desire of an employee.

5.K.11 Food -Refreshments

Defined: For the purpose of this section, the following definitions shall be used:

Refreshments: Light snacks and drinks commonly consumed at business or entertainment type functions. These include cookies, brownies, muffins, rolls, teas, coffee, soda, water, etc.

Meals: One of the regular occasions during the day when food is taken, as breakfast, lunch or dinner. This includes items commonly referred to as light or heavy hors d'oeuvres.

Policy: Food and refreshments may not be furnished to government employees and military personnel **without charge** except as noted.

Authorization: If meals or refreshments are to be provided under the circumstances described below, written justification shall be submitted via the chain of command, to the appropriate authority listed below for prior approval. The justification shall include all information necessary to determine compliance with this guidance:

a. Deputy Office Chief at Headquarters
b. Commander MLC (f)
c. ISC Comptroller
d. Commanding Officer for Headquarters unit

5.K.11.a External Meetings and Conferences Organized by other than the Coast Guard

Meals and refreshments may be funded at government expense during meetings and conferences given for the purpose of enhancing employee proficiency or qualifying employees for other duties **only** under the following circumstances. Charges for the meals and refreshments may be paid when the cost is a mandatory non-separable element of the registration fee.

In order to provide for meals and refreshments during conferences and meetings, where charges for meals and refreshments **are** a separate charge, the following requirements must be met: (B-160579 4/26/78)

1. Essential business relating to the official duties of the Coast Guard participant must be discussed during meal time, **and**

5.K.11.a External Meetings and Conferences Organized by other than the Coast Guard (Continued)

2. The presence of the Coast Guard participant during mealtime is absolutely necessary if the purpose and goal of the Coast Guard for authorizing the participant to attend the meeting is to be realized by the Coast Guard, **and**

3. The employee is not free to take the meals elsewhere without being absent from essential formal discussions, a**nd**

4. The meal must be incident to the meeting and not the other way around; that is, the conference must extend significantly beyond the meal itself.

5.K.11.b Internal Business Meetings

Meals and refreshments may not be funded at government expense during meetings, conferences, and workshops organized to principally deal with Coast Guard issues, meetings relating to Coast Guard operations or meetings dealing with internal agency functions. Internal business meetings do not meet the criteria of training as described below. (B-270199 8/06/1996)

Meals in Lieu of Per Diem:

Meals may be provided during training sessions for attendees who are authorized per diem, if the following provisions are followed. Meals provided to an attendee within the attendee's PDS must be paid by the attendee.

5.K.11.c Meetings, workshops and Conferences Organized by Coast Guard units

Meals and/or refreshments may not be funded at government expense for non-federal attendees during meetings, conferences, or workshops sponsored by Coast Guard units. If non-federal employees will be present during Coast Guard conducted events, food and/or refreshments **shall not be procured**. However, the use of the Coast Guard Trust, Extraordinary Expense Fund (XXF fund) may be authorized **if** the purpose of the event is determined to be representational in nature. (B-247966 6/16/1993)

5.K.11.d Training

Defined: Training, for the purpose of this section, is defined as an instruction given for the purpose of enhancing employee proficiency or qualifying employees for other duties. Training sessions are primarily given to materially enhance the student's ability, existing skill, or modify the student's professional qualifications so as to enable the student to assume different or enhanced duties.

Meals in Lieu of Per Diem:

Meals may be provided during training sessions for attendees who are authorized per diem, if the following provisions are followed. Meals provided to an attendee within the attendee's PDS must be paid by the attendee.

The procurement of meals to be served during a Coast Guard training session is authorized only under very limited circumstances. In order for the purchase of meals to be authorized, documentation must exist that: (B-244473, 1/13/92) (note: updated reference: JTR C4552.H and JFTR U4215.D)

1. The meal is incidental to the training meeting; that is, the meeting is not completely conducted at the meal table, **and**

2. The provision of food must be necessary to obtain the full benefit of the training, **and**

3. The employees are not free to take meals elsewhere without missing vital information relative to the training.

4. The amount to be contracted for the meal **shall not** exceed the applicable proportional per diem rate, **and**

5. The event must be a training event, dealing with contingency operations and not day-to-day operations of the service.

Refreshments: Coast Guard policy is that refreshments **will not** be provided for during training sessions organized by the Coast Guard.

5.K.11.e Cultural Awareness Programs

Appropriated funds may be used to purchase "samples" of ethnic food, not readily available in the community, to be served to government employees for the purpose of promoting cultural awareness.

The term **sample** is defined to mean of minimal portions and be separate from any meal. The intent of providing the samples is to provide attendees at such observances with an awareness of the culture or ethnic history being celebrated, and is limited to circumstances in which the serving of food samples advances the agency's equal employment opportunity (EEO) objectives. The term "readily available in the community" is defined to mean items that are not **mass-produced and mass consumed in urban areas**. In other words, if a unit were celebrating Italian heritage month, ordering pizza would not be appropriate. If a unit were celebrating Hispanic heritage month, ordering fast food tacos or burritos would not be appropriate. The EEO council should request items that will promote the program and provide workers with a broader understanding of the group it's promoting. (B-199387 dated 3/23/82)

5.K.11.f Emergency

Expenditures for food are authorized when the purchase of food is incidental to an extreme emergency requiring the protection of government property or the protection of human life. Law enforcement officials and their immediate family members may be quartered in temporary quarters and fed when their lives are threatened. (53 Comp. Gen. 71; 5 U.S.C. §5706a). This authority may not be used to stockpile emergency rations at units that are not authorized such stock.

5.K.11.g Uncompensated Volunteer

Meals may be furnished to uncompensated volunteer workers when their scheduled assignment extends over a meal period.

5.K.11.h Vessel Availability

Appropriated funds may be used to procure meals during emergency yard periods when the ship's mess is temporarily unusable or unavailable as a result of the yard period. The general principles contained in the Federal Acquisition Regulation (FAR) concerning reasonableness of price and full and open competition would provide the appropriate limitations on issuing contracts for meals.

5.K.12 Federal Executive Board

Public Law 107-67 authorizes federal agencies to use federally appropriated funds to support Federal Executive Board's. This support is accomplished by participating in the various programs provided by the local boards such as recognition and training programs. This authority does not allow the Coast Guard to make grants or donations to a local FEB without receiving some tangible benefit or service in return.

5.K.13 Gifts

In general, insufficient justification exists to use appropriated funds to purchase gifts. This prohibition results from the application of the necessary expense rule. The use of appropriated funds for the purchase of gifts to foster goodwill is not authorized unless expressly authorized by Congress (See 5.K.1.d External Recognition). (B-260260 12/28/95)

5.K.14 Insurance

The federal government is essentially a self-insurer. Therefore, in the absence of express statutory authority to the contrary, appropriated funds are not available for the purchase of insurance to cover loss or damage to government property. The following exceptions to this policy are allowed:

a. **Rental Vehicle Insurance -** Members and employees may be reimbursed for the cost of collision damage waiver insurance if it is determined that purchase of such insurance is required by law or procedure in certain foreign countries. The Joint Federal Travel Regulations (JFTR) and the Civilian Travel Manual (DOT 1500.6A) are the principal directives in this area and must be consulted.

b. **Contractor Required Insurance -** The Federal Acquisition Regulations (FAR) and Coast Guard Acquisition Procedures (CGAP), require contractors to carry minimum amounts of insurance under certain conditions against the loss of or damage to government property when in the possession of contractors.

5.K.14 Insurance (Continued)

c. **Professional Liability Insurance -** Coast Guard Professional Liability Insurance Reimbursement Policy, COMDTINST 12800.1, provides the policy concerning reimbursement of liability insurance for certain government employees.

d. **Liability Insurance for CDC Operations** – Appropriated funds may be used to obtain liability insurance to protect its non-appropriated assets in the event that an adverse judgment or settlement is to be paid from non-appropriated funds.

5.K.15 Lease of Real Property

Periodic payments for real property (including space inside buildings and structures), either monthly or annual, pursuant to lease agreements (*i.e.,* rent) are made with OE funds. Such periodic or rental payments **<u>are not</u>** subject to the Coast Guard's OE/AC&I thresholds. A lease is a contract for control and possession of specified real property for a specified period of time. The lessor is always a non-federal entity. **Federal agencies cannot "lease" property to each other and cannot charge another agency "rent."**

One time, or non-recurring expenses associated with the build out portion of a lease **<u>are</u>** subject to the Coast Guard's OE/AC&I thresholds as provided in section 5.M of this Manual.

Additional information on leases is found in chapter 7.A.3 of this Manual.

5.K.16 Luggage

In **very limited and highly unusual instances**, the Coast Guard may use appropriated funds to pay for luggage to be used by its members and employees in the performance of their official duties.

The luggage in question must remain the property of the Coast Guard and must be assigned to the user and returned when not in use. The following circumstance must be present and documented prior to any purchase of this equipment: (B-200154 2/12/81)

a. The luggage must be needed for the individual or unit to perform their mission.

5.K.16
Luggage (Continued)

b. The individual or unit must travel extensively in the performance of their duties in order to carry out its mission expeditiously and satisfactorily.

c. Individuals or team members cannot travel without luggage.

For the purpose of this section, the term "travel extensively" is defined by the number of travel days, **and** the reoccurrence of travel trips. These two together must be considered prior to authorizing a purchase for luggage. At a minimum, the member must travel:

1. A minimum of 20 trips per year, **and**
2. In excess of 140 days per year

Some examples of units that **may** be authorized under this provision would be:

1. Training Teams
2. SAT Teams
3. STAN Teams

The use of this authority shall be certified by a member of the senior command staff and incorporated into the procurement file.

5.K.17
Mascots

While station and unit mascots are a great tradition within the Coast Guard, providing support for these animals does not qualify as a necessary expense that may be charged to OE funds. All support costs (food, veterinary, etc.) for unit mascots must be borne by individual members of the unit on a voluntary basis, and must not be borne by appropriated funds.

5.K.18
Membership Fees

Memberships may be purchased in the Coast Guard's name in private and professional organizations if:

a. The membership primarily benefits the Coast Guard **and**
b. Is necessary to carry out an authorized function.

Generally, this benefit can result by permitting access to publications or information, as in the case of professional or civic organizations. (B-221569 6/2/1986, B-240371 1/18/91)

5.K.18 Membership Fees (Continued)

All memberships are subject to the review and approval of Headquarters Office Chiefs, District Chiefs of Staff, Deputy Commander, Maintenance and Logistics Command, or Commanding Officers of Headquarters units, as applicable. All membership requests **shall** be routed through the Chief of Contracting Office (COCO) that provides contracting support for the unit. The COCO shall determine whether the membership is proper. The final approving authority shall determine if the membership is necessary in support of the Coast Guard mission (See also recreational memberships in this chapter).

5.K.19 Military Exchange Facilities as Sources of Supply

Coast Guard units are authorized to consider **DOD exchanges** as a possible source of supply for micro-purchases. The requirements regarding mandatory sources of supply and distribution of micro-purchases as outlined in FAR 13.202 must still be followed.

5.K.20 Organizational Clothing

14 USC § 447 and 5 USC § 7903 authorize the use of appropriated funds to purchase special clothing equipment for the promotion and maintenance of safety and occupation health. These statutes, along with prior GAO decisions form the basis for Coast Guard policy on organizational clothing. (**Note:** COMDTINST M1020.6E will be updated to reflect this new policy).

Organizational clothing is Coast Guard owned clothing that is issued to Coast Guard members to perform their duties. Organizational clothing is only authorized to mitigate unusual situations or to alleviate a health and safety concern. Organizational clothing is not authorized to promote the appearance of the Coast Guard or Coast Guard programs without prior approval of G-WPM and CG-843.

Coast Guard Uniform Regulations, COMDTINST M1020.6E, paragraphs 4.D.1 through 4.D.10 provide authorization for specific pre-approved organizational clothing. In situations that require organizational clothing other than those listed, the unit must request authorization from headquarters, prior to purchasing any items

Requests for Organizational clothing may be made in writing or electronically. Requests must be routed through the chain of command to G-WPM. G-WPM will provide a response to the unit in consultation with G-LGL and CG-843 when required.

5.K.20 Organizational Clothing
(Continued)

In order for organizational clothing to be approved, three tests must be met:

1) The item must be "special" and not part of the ordinary and usual furnishings an employee may reasonably be expected to provide for themselves; **AND**
2) The item must be for the benefit of the Government. That is, essential to the safe and successful accomplishment of the work, and not solely for the protection of the employee, **AND**
3) The employee must be engaged in hazardous duty

All requests for Organizational clothing must provide information that addresses each of the above tests and any other relevant information that will assist G-WPM in making an informed decision that follows the above laws and will withstand the scrutiny of a GAO audit..

5.K.21 Personal Expenses and Furnishings

Items that are personal expenses or personal furnishings (i.e., business cards (except for designated recruiters), non essential medical care, personal qualification expenses, and seasonal greeting cards, coffee cups (except for authorized CGDFs), etc.) may not be purchased with appropriated funds.

Personnel are encouraged to review 4.C.13 of the Principles of Federal Appropriations Law (Red Book) for additional guidance.

5.K.22 Promotional Items

Promotional items are items that further the growth of a specific program or the Coast Guard service as a whole. In general, these items **may not** be purchased with appropriated funds without **specific** statutory authority.

Coast Guard Recruiting commands have limited authority to procure promotional items that will be provided to the general public for recruiting purposes. 14 USC § 468.

Another program that currently has specific, limited legislative authority is the Commercial Fishing Vessel Safety program.

Requisitioners are advised to obtain written authorization from program managers or CG-843 to ensure the items are legislatively authorized.

5.K.23 Recreational Memberships

The purchase of this type of membership is authorized to provide eligible MWR patrons, as defined in the Coast Guard Morale, Well-Being, and Recreation Manual, COMDTINST 1710.13 (series), access to fitness center-type equipment when they are not reasonably available at the installation. Golf memberships shall not be purchased with OE funds except as noted in chapter 5 of the Coast Guard Morale, Well-Being, and Recreation Manual, COMDTINST M1710.13 (series).

Memberships in the name of the command are authorized for use by eligible patrons of the MWR program, considering the prioritized eligible patron listing as contained in the Coast Guard Morale, Well Being, and Recreation Manual, COMDTINST 1710.13 (series). Memberships shall be approved in the same manner and using the same criteria as memberships to professional or civic organizations previously discussed in this chapter.

5.K.24 Retirement Issues

See 5.K.27 Traditional Ceremonies and 5.K.1.b.1, Retirement Recognition for guidance on use of OE funds for this purpose.

5.K.25 Savings Bonds

Appropriated funds may be used to purchase savings bonds for "Sailor of the Quarter" awards in a nominal amount. Nominal has been defined to mean not-to-exceed $100. G-LGL has determined that this policy falls within the legal parameters of 14 U.S.C. § 503.

5.K.26 Seasonal Decorations

Seasonal decorations qualify as necessary expense to the extent they relate to and improve the working environment. The decorations cannot be for personal use (must be displayed in public areas, not individual offices) and must be nonsectarian. Purchase of religious cards and religious articles with appropriated funds are prohibited, except as provided for by Religious Ministries within the Coast Guard, COMDTINST M1710.4 (series). (B-226011 11/17/87)

5.K.27 Traditional Ceremonies

Non-personal expenses that are customarily incurred incident to traditional ceremonies are payable from appropriated funds. The appropriation account to be charged depends upon the essential nature of the ceremony. Hence, expenses incident to a unit change of command ceremony are chargeable to OE, while expenses incident to a groundbreaking or cornerstone ceremony are chargeable to the appropriation that funded the construction of the facility.

5.K.27 Traditional Ceremonies (Continued)

The charges allowed for change of command ceremonies must be linked directly to the ceremony itself and not any reception that follows.

All expenses related to a reception are considered personal expenses and are not payable with appropriated funds. This includes (but is not limited to) facility and equipment rentals, food expenses, and travel expenses for personnel whose sole purpose is to coordinate or be involved in the reception, and return postage for RSVP cards/envelopes.

The same prohibition generally applies to expenses related to retirement ceremonies and the receptions that follow.

Expenses related to retirement ceremonies and receptions are personal expenses and are not payable with appropriated funds. Limited exceptions to this prohibition do exist. These include items traditionally provided for (i.e., government facility or equipment usage that does not involve charges), items customarily presented to a member/employee upon retirement (i.e., Retirement certificate, Appreciation certificate for spouse, flag etc.) or a recognition item as previously mentioned in this part.

Coast Guard traditional ceremonies are limited to:

1. Change of commands
2. Vessel christenings
3. Vessel decommissionings
4. Change of Watch ceremonies for the Vice Commandant of the Coast Guard and the Master Chief Petty Officer of the Coast Guard **only**
5. Ceremonies recognizing the Coast Guard "Ancient Mariner" and the Coast Guard "Ancient Albatross"
6. Groundbreaking ceremonies
7. Dedication ceremonies for the laying of cornerstones in public buildings, and
8. Graduation ceremonies

Only those ceremonies listed above are authorized support with appropriated funds as discussed. Support of other ceremonies must be requested and approved by CG-84 prior to obligating or expending appropriated funds.

5.L Research, Development, Test and Evaluation - OPSTAGE Financial Plans

OPSTAGE management of the RDT&E appropriation is based upon an annual financial plan, which specifies apportionment of funds on a quarterly basis for major RDT&E programs. Once appropriated, RDT&E funds remain available until expended unless otherwise rescinded by Congress. The non-lapsing characteristic of these funds does not eliminate the need for effective financial planning and control to match obligations with the apportionment plan.

Since the obligation of significant amounts of RDT&E funds is dependent upon the timing of research contract awards and associated upper level management review and approval, close attention must be given to the anticipated award dates of these procurements when the financial plan is developed so that the end-of-year carryovers are minimized.

5.L.1 Administration of RDT&E Funds

a. RDT&E funds are administered at two locations: Headquarters/CG-66 and the R&D Center.

b. CG-66, the Program Manager, administers/oversees RDT&E personnel funds.

c. The R&D Center administers RDT&E project funds, with CG-66 oversight.

d. CG-66 administers funding for Headquarters (CG-66) personnel and support functions. This includes preparing and processing purchase requests (PR), travel orders, training, local travel and print requests.

5.L.2 Authorized Uses of RDT&E Funds

RDT&E funds may be used for the following specifically-defined purposes:

a. **RDT&E Technology Based Building** - Involves technology scans, forecasts or assessments to produce a base of agency knowledge to support applied R&D efforts 5-15 years hence. This category facilitates the R&D Program's obligation to systematically develop and maintain knowledge that can bring the latest technological advances to the attention of sponsors. All such efforts must align with the Coast Guard's R&D strategy and goals.

5.L.2
Authorized Uses of RDT&E Funds
(Continued)

b. **RDT&E Research** - Is the systematic study and experimentation directed toward scientific or engineering phenomena/principles as they relate to addressing Coast Guard needs. It provides fundamental knowledge for the solution of identified Coast Guard problems. It also augments the knowledge base for subsequent exploratory and advanced development of Coast Guard-related technologies, and of new and improved functional capabilities for performing Coast Guard missions. Example: Determining the physiological effects leading to small boat crew fatigue.

c. **RDT&E Exploratory Development** - Is the systematic use of the knowledge of scientific or engineering phenomena/principles in the initial stages of producing or adapting technology new to an intended Coast Guard application; it is performed to establish some confidence that the proposed technology can address the pertinent mission requirement. Its distinguishing characteristic is the goal of evaluating and demonstrating the feasibility and practicality of the technology in meeting the mission requirement. Specific activities include analytical modeling, simulation, or the minor-scale production of methods, procedures or systems. The effort produces relatively low cost, rudimentary or "proof of concept" systems, methods, or procedures to support decisions as to whether the technology shows sufficient promise to warrant the additional cost of further, advanced development. Example: Exploring a new lamp technology for short-range aids that would produce the same amount of light at lower power requirements.

d. **RDT&E Advanced Development** - Begins once the proposed technology's feasibility and practicality have been sufficiently established to warrant further development for experimental use within an actual or simulated operational environment. Specific activities include extensions or upgrades of the analytical modeling or simulation or the fuller production of methods, procedures or system hardware/software. The distinguishing characteristic of this category is the goal of further evaluating and demonstrating technology for test or

5.L.2
Authorized Uses of RDT&E Funds
(Continued)

experimentation, rather than producing technology designed and engineered for eventual service use. RDT&E advanced development is a follow-on activity to exploratory development. In advanced development, the level of effort is established so that at completion of this effort, uncertainty regarding the functional capability of the new technology has been eliminated. Example: Adaptation of solar power technology to the rigors of the marine environment typical to lighted aids to navigation, especially buoys.

e. **RDT&E Test and Evaluation (T&E)** - Is performed to confirm the results of the research and/or development stages of projects and to validate that the effects on the Coast Guard will be those desired. However, rather than comprising a separate category of research and development, T&E is an inherent part of all of the categories defined above; it is a logical outflow of the work performed in each. Research T&E involves the systematically planned establishment of conditions from which data can be collected, assembled, and analyzed. Exploratory Development T&E involves the collection and analysis of data to determine feasibility and practicality. Advanced Development T&E involves the collection and analysis of data to establish suitability for Coast Guard uses.

f. **Personnel Compensation, Benefits, and Related Administrative Costs for RDT&E** billets and positions. This activity provides the support structure required to execute the entire Coast Guard R&D Program. It provides the strategic planning, programming, management and support personnel, material, resources and leased facilities for the execution of the Coast Guard RDT&E Program, including:

1. Military and civilian personnel compensation and benefits;
2. Travel and transportation of persons and transportation of things;
3. Rental/lease payments;

5.L.2
Authorized Uses of RDT&E Funds
(Continued)

4. Communications, utilities, and miscellaneous charges;
5. Printing and reproduction;
6. Advisory, assistance and other services;
7. Research and development contracts;
8. Subsistence and support of persons (military dependents);
9. Supplies and materials; and
10. Equipment

5.L.3
RDT&E Funding Responsibilities

RDT&E responsibility for funding specific projects is established as part of the budget formulation process. Projects identified and placed in the OST Stage RDT&E budget become formally identified as RDT&E projects. RDT&E projects, which do not survive subsequent budget stages, cannot subsequently become eligible for funding from other appropriations in the same fiscal year.

5.L.3.a
Completed RDT&E Products

Procedures for formal operational delivery of RDT&E products are contained in Research, Development, Test and Evaluation Appropriation; Procedures for Obtaining Services and Appropriate Definition, COMDTINST 7044.1A (series) as a component of the final stage in the New Product Gating (NPG) Process. Pending formal product delivery, RDT&E retains funding responsibility for projects. Funding shortfalls must be covered by RDT&E funds and may not be supplemented from other appropriations.

5.L.3.b
Un-funded Projects

New, un-funded projects proposed or identified after submission of the budget to OST will be evaluated by the RDT&E Program via the NPG Process as candidates for RDT&E funding.

CG-66 may accept new projects within the limits of the Appropriation Manager's reprogramming authority or refer the matter to G-CCS via the Director of Information and Technology (CG-6) with recommendations.

5.L.4 Project Targets

Project targets are provided to the Coast Guard R&D Center and other administrative target field units performing RDT&E support. Funds are transmitted for each effort assigned or as needed to support ongoing field activity. Despite the no-year character of RDT&E funds, field ATU management of RDT&E resources shall ensure timely obligation of funds consistent with RDT&E plans. ATUs should note delays, scheduling problems, and/or insufficient funding early so that adjustments may be made and funds reallocated as necessary.

5.L.4.a Research and Development Center

Funds earmarked for specific project efforts and administrative expenses are provided to the R&D Center by project targets with modifications based on a yearly R&D Center allocation. While plans are approved by CG-66 for funds budgeted toward R&D Center salaries, certain administrative expenses are retained by CG-66 for direct payment via direct charge or refund to the OE appropriation.

The R&D Center shall report to CG-66 anticipated year-end un-obligated balances, funds greater than needs, and additional funds needed for each project (including administrative expenses). Accompanying each report shall be a brief explanation of the variance and corrective action recommended.

5.L.4.b Other Administration Target Units

Non-RDT&E field units are provided with RDT&E funding for specific field-testing and evaluation efforts. Performing field units shall be fully funded for costs incurred in providing such support.

There are several methods by which non-RDT&E field units can effectively obligate RDT&E funds. These include:

1. Direct transmittal of project targets to the respective ATUs.

2. Establishment of a miscellaneous obligation at Headquarters against which expenditures in the field can be charged.

3. Refunds to non-RDT&E field units “after the fact” for actual costs incurred using Coast Guard refund procedures. The unit's account is credited and the appropriate Headquarters RDT&E account is charged for the cost incurred.

5.L.4.b Other Administration Target Units (Continued)

The preferred procedure is the direct transmittal method.

By 15 June, all ATUs maintaining RDT&E project targets shall identify by message or letter report the anticipated year end un-obligated balance, funds greater than needs, and/or additional funds needed for each project. Accompanying each report shall be a brief explanation of the variance in order to allow proper evaluation for corrective action.

5.L.5 Funding Basis for RDT&E Projects

The funding basis for a RDT&E project is defined as the sum of all funding appropriated for the life of that particular project. Except, for projects that routinely receive annual funding, the project-funding basis is limited to the current year funding level. For purposes of these guidelines, each budget sheet in the RDT&E section of the Coast Guard Congressional Stage Budget estimates constitutes a RDT&E "project."

5.L.6 Refunds

Coast Guard appropriations (e.g., OE and AC&I) can fund common or shared requirements with the RDT&E appropriation. This would include mutually beneficial items like rental of equipment, procurement of materials, desired contracted support, etc. Payments made but not fully funded by RDT&E for common services require refund prior to the end of the fiscal year. CG-8 shall approve all refunds between RDT&E and other appropriations.

5.M Acquisition, Construction, and Improvements (AC&I) -Purpose

The AC&I capital investment program provides funding for the procurement, construction, rebuilding, or improvement of the Coast Guard's vessels, command, communication and control (C^3), ATON, related equipment and shore plant (the term “shore plant” includes real property under the control of another federal agency). This section outlines procedures and guidelines for the execution of the AC&I appropriation.

5.M.1 AC&I Appropriation

Typically, Congress appropriates AC&I funds into six "Program, Project or Activity" (PPA) categories. Currently, these categories are, Vessels, Deepwater, Aircraft, Shore/ATON, Personnel and Other Equipment. Congressional report language may further define the purpose of the each PPA by establishing project line items in the text of the reports. Every attempt is made to comply with Congressional intent within the limits of existing fiscal, acquisition and other laws. Once funds are appropriated through an appropriations act, CG-83 coordinates with OMB to distribute the AC&I funds to individual project accounts. Supplemental appropriations often have different formats and execution guidelines than annual appropriations and must be carefully reviewed before obligating the funds.

5.M.2 AC&I Category

AC&I category definitions (i.e. Vessel, aircraft, shore, and other equipment) are used to make correct AC&I – OE funding determinations. OE, to include AFC 30 and AFC 4X funding streams, fundamentally differ from AC&I funding. OE funds are expressly designated to support current assets or make relatively minor adjustments to them. AFC-30 covers unit level operations and maintenance. AFC-4X specifically provides non-recurring maintenance, repair, alterations, and renewal to assets to achieve their full economic life. AFC-4X program also includes a limited threshold for improvements, and compliance work. The AC&I program primarily supports the acquisition of assets or major construction and improvements that increase the capacity/capability of an asset.

5.M.3 General AC&I Terms

The following terms provide general guidance when determining whether to use funds from the AC&I or OE appropriation. The Shore AC&I program provides more specific guidance due to project complexities which require a detail break down by work categories. Where more specific definitions exist, AC&I/OE funding determinations must reflect these more rigorous standards.

5.M.3.a Maintenance

The act of keeping fixed assets in useable condition. It includes preventive maintenance, normal repairs, replacement of parts and structural components, and other activities needed to preserve the asset so that it continues to provide acceptable services and achieves its expected life. Maintenance excludes activities aimed at expanding the capacity of an asset or otherwise upgrading it to serve needs different from, or significantly greater than, those originally intended. (Federal Accounting Standards Advisory Board (FASAB) #6/Accounting for Property, Plant and Equipment – June 1996)

5.M.3.b Improvement

An improvement is an increase in capacity, capability or life of an existing vessel, aircraft, ATON or real property facility or other capital resource. The difference in cost between an "improved" alternative and that of the "replacement-in-kind" alternative is considered the value of the improvement.

5.M.3.c Major vs. Minor AC&I Projects

Major AC&I projects are of such complexity and dollar value that they warrant a separate line item in the annual AC&I budget submission to DHS, OMB and Congress. Minor AC&I projects are those of a lesser degree of complexity and dollar value but still beyond the scope of an OE funded project or routine maintenance. Minor AC&I projects appear collectively as a single line item within applicable categories. Currently, the shore/ATON category has minor AC&I line items.

5.M.4 AC&I Work Categories

There are four defined categories for the AC&I appropriation. These categories are outlined below and summarized in table 5-1.

5.M.4.a Vessels

The **initial acquisition, development, or construction** of any vessel costing more than $l.0M per vessel ***or*** $8.0M per project or cutter class/boat class. **Improvement, renovation, upgrade, replacement or alteration** of any vessel which exceeds $1.0M per vessel ***and*** $8.0M per project or cutter class/boat class, ***or*** costing more than $10.0M regardless of the cost per vessel.

5.M.4.b Aircraft

The **initial acquisition, development, or construction** of any aircraft. **Renewal** of aircraft, which exceeds $2.0M per aircraft ***and*** $10.0M per project or fleet. **Improvement, renovation**, **upgrade, replacement or alteration**, the value of which exceeds $2.0M per aircraft ***or*** $10.0M per total project cost regardless of the unit cost.

5.M.4.c Other Equipment

Hardware &/or Software. The **initial acquisition, development, or construction** of any system, software or equipment costing over $1.0M per usable segment or item ***or*** $10.0M total project cost. **Improvement, renovation, upgrade**, **replacement or alteration** of equipment or hardware which exceeds $1.0M per usable segment or item ***or*** $10.0M total project cost, regardless of the per site or cost.

5.M.4.d Shore Facilities/Aids to Navigation (ATON)

The work category definitions presented here were logically developed to isolate root causes for civil engineering work activities. This is important to clearly separate the difference between AC&I and OE funding determinations. In addition, isolation of the root cause fundamentally coordinates sound funds management and performance-base management with one objective accounting system. Table 5-2 provides additional information to used in conjunction with these work category definitions.

5.M.4.d.(1) Shore Facilities Work Categories

a. Maintenance, Repair, and In-Kind Replacements (M) - activities needed to keep a building or infrastructure operational; specifically focusing on physical continuity. These activities are required to achieve full economic lives of real property assets, components, assemblies, and systems, or at the end of its economic life an in-kind replacements such as a chiller for a chiller or a roof for a roof, and includes energy retrofits motivated by economic considerations. Additionally M work includes survey, inspection and assessment work used to identify, scope and schedule M activities. M activities do not alter the quality or quantity of functional capabilities provided by the building or infrastructure and can be performed on any Group Element defined by UNIFORMAT II (ASTM E-

5.M.4.d.(1)
Shore Facilities Work Categories (Continued)

1557), with the exception of F20 - Selective Building Demolition and G1020 – Site Demolition and Relocations. Maintenance dredging by nature will always be OE funded. Unless it is part of an AC&I project.

b. Alterations (A) - Work required to adjust interior arrangements or other physical characteristics of an existing facility/structure so that it may be more effectively adapted to or utilized for a new or changed use. This includes changes to layouts, work related to move, and work motivated by aesthetic needs beyond the physical activities defined as M. The objective for differentiating M verses A activities is to adequately protect true maintenance as a base verse other important work required to use and optimize facilities for continued, efficient use. A activities are limited to the following UNIFORMAT II (ASTM E-1557) groupings: B20 - Exterior Enclosure; C – Interiors; D – Services; E - Equipment & Furnishings; F10 - Special Construction; G - Building Sitework.

c. Improvements (I) - Activities that enhance the mission (and functional) capabilities of a building or infrastructure, including any Group Element defined by UNIFORMAT II (ASTM E-1557) for new construction, acquisitions, additions, expansions, or use adaptations with the exception of F20 - Selective Building Demolition and G1020 – Site Demolition and Relocations. The only other possible exception is structural work on marine construction. If marine work improves the structural capacity beyond original design then it is an improvement, otherwise it is classified as M, A, or C depending on the root cause for the work. Additionally, by definition I include any work of the following UNIFORMAT II (ASTM E-1557) groupings: A – Substructure; B10 – Super Structure.

5.M.4.d.(1) Shore Facilities Work Categories (Continued)

d. Code Compliance (C) - Activities solely required to bring a facility back into code, including life safety, fire, seismic, health and safety, occupational health and safety, and environmental codes and environmental and energy regulations. C activities can be performed on any Group Element defined by UNIFORMAT II (ASTM E-1557), with the exception of F20 - Selective Building Demolition and G1020 – Site Demolition and Relocations.

e. Demolition (D) - Demolition activities, partial demolition activities in preparation for other categories of work, and work related to divestiture activities and are explicitly defined under Uniformat II (ASTM E-1557) Group Element F20 - Selective Building Demolition or Individual Element G1020 – Site Demolition and Relocations.

5.M.4.d.(2) Shore Facilities Filter Criteria

There are two basic filtering criteria used to differentiate funding sources described below. A user-friendly funding source decision tree and matrix are available in table 5-3 and table 5-4.

a. The first filter evaluates amount of Maintenance and Alterations in comparison with two figures: (1) Maintenance and Alterations component is compared to a facility's Plant Replacement Value (PRV). If this value is greater then 50% of the PRV the second Maintenance comparison is performed. (2) If the Maintenance component exceeds $750k the project will be funded with AC&I otherwise it will be funded with OE. Note: When using this first filter, PRV is based on an average unit cost by individual asset type and may not always represent a fair market value. In cases where this occurs an independent PRV estimate may be obtained to make an appropriate Funding Source Decision and must be approved via Headquarters, G-SEC. Acceptable independent estimates may be based on industry standards such as, Tri-services, RS Means, and Swifts. By exception maintenance dredging will always be funded by the OE appropriation.

5.M.4.d.(2) Shore Facilities Filter Criteria (Continued)

b. The second filter looks at the sum of non-maintenance work or specifically the sum of Improvements and Code Compliance, but not including demolition. If the sum for this type of work exceeds certain thresholds for the specific asset type (housing, ATON, or other) then it is considered to have recapitalization effects.

5.M.4.d.(3) Shore Facilities/ATON Thresholds

The AC&I thresholds for the shore/ATON category are:

a. Acquisition and construction – Any acquisition of land (including improvements) regardless of cost; any construction of housing, regardless of cost, or the acquisition or construction of a real property facility over $750K total project cost ($25K per new ATON into the inventory).

b. Maintenance, repair, and in-kind replacement and alterations are greater than 50 percent of the plant replacement value (per RPFN) and exceeds $750K per RPFN.

c. Improvements and code compliance are greater than $750K per RPFN (housing $50K per RPFN).

5.M.4.d.(4) Shore Facilities Geographical Cost Index (GCI)

AC&I/OE threshold for the shore facilities/ATON category were created based on a GCI of 1.00. This thresholds for the shore facilities/ATON category is adjustable for local GCIs and will be maintained by G-SEC in the Civil Engineering Database. The GCI will be based on DOD's Tri-Services Area Cost Factors and will be updated annually. Total OE project costs adjusted for GCI cannot exceed $1.5M.

5.M.4.e Acquisition, Construction and Improvement Projects

Acquisition, construction and improvement projects not meeting the above criteria shall be funded from the OE appropriation. Additionally, the OE appropriation will fund **routine** component repair or overhaul such as program depot maintenance, cutter dry dock and dockside availability, and similar routine depot-level maintenance of any Coast Guard and other government agency owned properties or other federally controlled facilities. **Non-routine** projects undertaken during a dry-docking or other depot-level maintenance period must be considered for AC&I funding through application of the criteria described above.

5.M.4.f Concurrent AC&I and OE Projects

In order to maintain a clear distinction between funding sources and avoid mixing of appropriations, concurrent AC&I and OE funded construction, renovation and improvement projects should normally not be undertaken in the same structure, vessel, or contiguous area. When it is believed that the execution of concurrent projects may be beneficial to the Coast Guard, project managers shall obtain approval from CG-8, or their designee, prior to execution. As a general rule, OE improvement or renovation projects in shore facilities should not be started within the twelve-month period following the completion of an AC&I project.

5.M.4.g AC&I Payroll Expenses

AC&I has a specific annual appropriation to fund "personnel compensation and benefits and related costs." Thus, the annual AC&I personnel compensation appropriation, rather than the multi-year project funds, must be used to fund all AC&I related personnel costs, including TEMAC or other temporary personnel augmentations related to project execution. CG-8 **may** approve the use of project funds from a supplemental appropriation to pay for personnel costs relating to a specific, unplanned project mandated by Congress. This approval, will only cover personnel costs from the time the appropriation supplemented is enacted until the personnel costs can be factored into the next budget formulation cycle.

5.M.5 AC&I vs. OE Funding

Minor acquisitions, rebuilding, and improvements that do not meet the criteria for the Minor AC&I Shore Construction Program (See Planning and Programming Manual, COMDTINST M16010.6 (series)) are to be funded from the OE appropriation. Recurring equipment replacements will normally be funded from the OE appropriation. For example, replacement of engines on a single vessel due to age and wear, unless the replacement is a fleet-wide of a major rehabilitation, should be funded from the OE appropriation.

5.M.6 AC&I Financial Plans -OPSTAGE Financial Plan

Management of AC&I funds, normally appropriated on a multi-year basis and available for two to five years, is based on a financial plan developed in accordance with the OPSTAGE financial plan. In line with OMB apportionment administrative expense funds that includes personnel costs, are available for two years and managed on a quarterly basis while project funds are managed on an annual basis. Deviations from this plan should be processed and approved in accordance with procedures in this section.

5.M.6.a
Funds Management

Management procedures shall be developed and maintained by CG-8, OMB, and CG-83 to effectively monitor, control, and evaluate the progress of the AC&I financial plan. To ensure that the AC&I program is executed as closely as possible to the plan, contract planning should be based on realistic pre-award lead times.

5.M.7
ATU Guidance

Funds transferred to ATUs under this appropriation are for specific projects. Funds are transferred separately for each project during the fiscal year, based upon the unit's capabilities for implementing the specific projects. All management procedures for handling AC&I funds must accomplish the following:

a. Ensure that definite plans are made for execution of projects promptly. Project officers should devote particular attention to project completion at the earliest possible date.

b. Isolate and eliminate any "bottlenecks" that may hinder project accomplishment. The lack of an environmental impact statement or administrative indecision may impede the progress of a project.

c. Determine promptly if available funds are sufficient to meet project needs so that early adjustments may be effected. Project officers must promptly release excess funds, as they may be required for other projects.

d. Provide for early determination of the ability to obligate the project target funds for each specific target. Project officers should bring any significant delays in meeting project milestones to the attention of G-S with recommendations for target adjustments. Most AC&I funds are obligated on the basis of an executed formal contract. To ensure timely obligation, project officers are urged to commence the bid initiation process prior to the period in which funds become available. Project officers should minimize large carryovers of AC&I funds into the next fiscal year.

5.M.7
ATU Guidance
(Continued)

e. Guidance on financial execution of the AC&I funded Shore Construction and Waterways Programs is provided to the field annually by letter from the Office of Civil Engineering (G-SEC).

5.M.8
Management Reporting Systems for Projects

A management reporting system initiated at Headquarters has been designed to improve executive direction and financial management of the AC&I program and to keep staff components abreast of the progress achieved in executing the program. Major projects are subdivided when allotted into project elements such as site acquisition, construction, electronics, and outfitting. Point accounts are assigned to enable project managers to maintain accountability of each project element. A separate allotment account should be established for each point account in the target. Identify targets established for each project element by point account under the basic target number. ATUs are authorized to transfer allotted funds between project elements within each AC&I project target without prior approval from Headquarters. Transfer of funds ***between*** distinct project accounts is not authorized.

5.M.9
CIFP Request - Procedures

A CIFP between project targets shall be requested and approved using Integrated Budget Development System and Automated Funds Transfer System (FPD/AFT).

The CIFP shall be completed in sufficient detail to document the reason for the change, what it is intended to accomplish, impact on target project and any other amplifying information. All references noted shall be attached, including summary documentation of telephone calls.

Financial plans are supporting documentation during the apportionment process as approved by OMB. Changes beyond this approval authority shall be forwarded to G-CCS via CG-83, and CG-8. A copy of all approved CIFPs will be forwarded to CG-83.

5.M.10 Modification of Project Targets/Field Requests for Funding Adjustments

OMB will receive and coordinate all such correspondence from MLCs and Headquarters units. Message requests for funds shall indicate G-S action for G-S controlled projects. G-A and G-O shall be listed as action office for projects under their respective control. Such correspondence shall be routed to the appropriate target project officer for preparation of a reply. The outgoing reply will normally be available for release within 10 working days after receipt by the action office.

All project target adjustments must be documented on Form CGHQ-3200, Financial Transfer Authorization (FTA).

5.M.11 Financial Closure of Completed AC&I Projects

When the project administrator determines that an AC&I project is ready for closure, they will advise CG-8, CG-83 and FINCEN. The un-obligated balance of the completed AC&I project targets will no longer be available to finance any additional obligations. FINCEN will review the status of all unpaid obligations outstanding under each physically completed AC&I project target for the purpose of the following:

a. Establishment of accrued liabilities for material and services delivered but not billed.

b. Follow-up action to obtain delivered orders and billings to expedite financial closure of the project.

c. Cancellation of those obligations, which will not require future payment.

Table 5-1 AC&I/OE Thresholds and Guidelines

The following table summarizes the thresholds where projects should be considered AC&I or OE. As mentioned earlier, any maintenance project (as previously defined) will normally be paid with OE funds. Otherwise, the table below should be referenced. If a project exceeds the below thresholds, it should be considered an AC&I project; anything below the threshold should be considered an OE project.

CATEGORY[1]	*Acquisition, or Construction*	*replacement or alteration of an item or asset*
Vessels	Costs over $1M per vessel ***or*** $8M per project / cutter class/boat class	Costs over $1M per vessel ***and*** $8M per project/cutter class; boat class ***or*** $10.0M total project cost.[2]
Aircraft	Any acquisition ***or*** construction of aircraft.	Costs over $2M per aircraft ***or*** $10.0M total project cost.[3]
Other Equipment: Hardware & Software[3]	Costs over $1M per usable segment or item ***or*** $10.0M total project cost.	Cost over $1M per usable segment or item **or** $10.0M total project cost. [3]

Shore/ATON [3,4,6]	*Acquisition, or Construction*	**Maintenance Repair/ In-kind Replacement & Alterations**	**Improvements and Code Compliance**
	Any acquisition of land (including improvements) regardless of cost; any construction of housing, regardless of cost; or the acquisition or construction of a real property facility over 750K total project cost (25K per new ATON into the inventory).	In kind replacement & alterations are greater than 50% of the plant replacement value (per RPFN) and exceeds 750K per RPFN.	Greater than 750K per RPFN (housing 50K per RPFN)

These thresholds and guidelines apply to both Coast Guard and other federally controlled property, when Coast Guard appropriations are the funding source.

---

[1] The Integrated Deepwater System (IDS/Deepwater) resource decisions should follow the appropriate category thresholds (i.e., if dealing with an aircraft issue, use the aircraft category thresholds to determine AC&I vs. OE funding).

[2] The term "total project cost" constitutes the entire multi-year funding stream needed to meet the objectives of the project planning documentation or submitted Resource Proposal, without the "OE tail" or follow-on expenses.

[3] This category applies to stand alone projects that do not fall under another AC&I category. In many cases, other equipment hardware and software are part of another larger AC&I project.

[4] Shore/ATON Major: project meets the above criteria and exceeds $1.5M. Project is one between $750K and $1.5 M.

[6] If M&A>50% of PRV, then M&A&I&C cannot exceed $1.5M per RPFN.

Table 5-2 - UNIFORMAT II (ASTM E-1557-97) and Coast Guard Work Category Matrix

Level 1 Major Group Elements	Level 2 Group Elements	Level 3 Individual Elements	M	A	I	C	D
A. Substructure	A10 Foundations	A1010 Standard Foundations	X			X	
		A1020 Special Foundations	X		X	X	
		A1030 Slab on Grade	X		X	X	
	A20 Basement Construction	A2010 Basement Excavation	X		X		
		A2020 Basement Walls	X		X		
B. Shell	B10 Super Structure	B1010 Floor Construction	X		X		
		B1020 Roof Construction	X		X		
	B20 Exterior Enclosure	B2010 Exterior Walls	X	X	X	X	
		B2020 Exterior Windows	X	X		X	
		B2030 Exterior Doors	X	X	X	X	
	B30 Roofing	B3010 Roof Coverings	X	X	X		
		B3020 Roof Openings	X	X	X	X	
C. Interiors	C10 Interior Construction	C1010 Partitions	X	X	X		
		C1020 Interior Doors	X	X	X	X	
		C1030 Fittings		X		X	
	C20 Stairs	C2010 Stair Construction	X	X		X	
		C2020 Stair Finishes	X	X	X	X	
	C30 Interior Finishes	C3010 Wall Finishes	X	X		X	
		C3020 Floor Finishes	X	X		X	
		C3030 Ceiling Finishes	X		X	X	
D. Services	D10 Conveying	D1010 Elevators and Lifts	X	X	X	X	
		D1020 Escalators & Moving Walks		X	X	X	
		D1090 Other Conveying Systems	X	X	X	X	
	D20 Plumbing	D20 Plumbing		X		X	
		D2010 Plumbing Fixtures	X		X	X	
		D2020 Domestic Water Supply	X	X		X	
		D2030 Sanitary Waste		X	X	X	
		D2040 Rain Water Drainage	X		X	X	
		D2090 Other Plumbing Systems	X	X	X	X	
	D30 HVAC	D3010 Energy Supply	X	X	X		
		D3020 Heat Generating Systems	X	X	X	X	
		D3030 Cooling Generating Systems	X	X	X	X	
		D3040 Distribution Systems		X	X		
		D3050 Terminal and Package Units	X	X	X	X	
		D3060 Controls & Instrumentation	X		X		
		D3070 Systems Testing and Balancing	X		X	X	
		D3090 Other HVAC Systems & Equipment	X		X	X	

continued next page

D. Services	D40 Fire Protection	D4010 Sprinklers	X	X	X	X	
		D4020 Standpipes	X		X	X	
		D4030 Fire Protection Specialties	X	X	X		
		D4090 Other Fire Protection Specialties	X	X	X		
	D50 Electrical	D5010 Electrical Service & Distribution		X	X	X	
		D5020 Lighting and Branch Wiring	X	X	X		
		D5030 Communications and Security	X	X	X		
		D5090 Other Electrical Systems		X		X	
E. Equipment & Furnishings	E10 Equipment	E1010 Commercial Equipment	X	X	X	X	
		E1020 Institutional Equipment	X		X	X	
		E1030 Vehicular Equipment	X		X		
		E1090 Other Equipment		X	X	X	
	E20 Furnishings	E2010 Fixed Furnishings	X		X	X	
		E 2020 Movable Furnishings	X		X		
F. Special Construction & Demolition	F10 Special Construction	F1010 Special Structures	X		X		
		F1020 Integrated Construction		X	X	X	
		F1030 Special Construction Systems	X	X	X	X	
		F1040 Special Facilities		X	X	X	
		F1050 Special Controls & Instrumentation	X	X		X	
	F20 Selective Building Demolition	F2010 Building Elements Demolition					X
		F2020 Hazardous Components Abatement					X
Level 1 Major Group Elements	Level 2 Group Elements	Level 3 Individual Elements	M	A	I	D	C
G. Building Site work	G10 Site Preparation	G1010 Site Clearing		X	X	X	
		G1020 Site Demolition & Relocations					X
		G1030 Site Earthwork		X	X	X	
		G1040 Hazardous Waste Remediation	X		X		
	G20 Site Improvements	G2010 Roadways	X	X		X	
		G2020 Parking Lots	X	X	X		
		G2030 Pedestrian Paving	X	X	X		
		G2040 Site Development	X		X		
		G2050 Landscaping	X	X	X		
	G30 Site Mechanical Utilities	G3010 Water Supply	X	X		X	
		G3020 Sanitary Sewer	X	X	X	X	
		G3030 Storm Sewer	X	X	X	X	
		G3040 Heating Distribution	X		X	X	
		G3050 Cooling Distribution		X	X		
		G3060 Fuel Distribution	X	X		X	
		G3090 Other Site Electrical Utilities	X	X	X	X	

continued next page

G. Building Site work	G40 Site Electrical Utilities	G4010 Electrical Distribution	X	X		X	
		G4020 Site Lighting		X	X	X	
		G4030 Site Communications & Security	X		X	X	
		G4090 Other Site Electrical Utilities	X		X	X	
	G90 Other Site Construction	G9010 Service and Pedestrian Tunnels	X		X		
		G9090 Other Site Systems and Equipment		X	X	X	

Table 5-3 Fund Source Decision Tree for Shore Facility/ATON Category

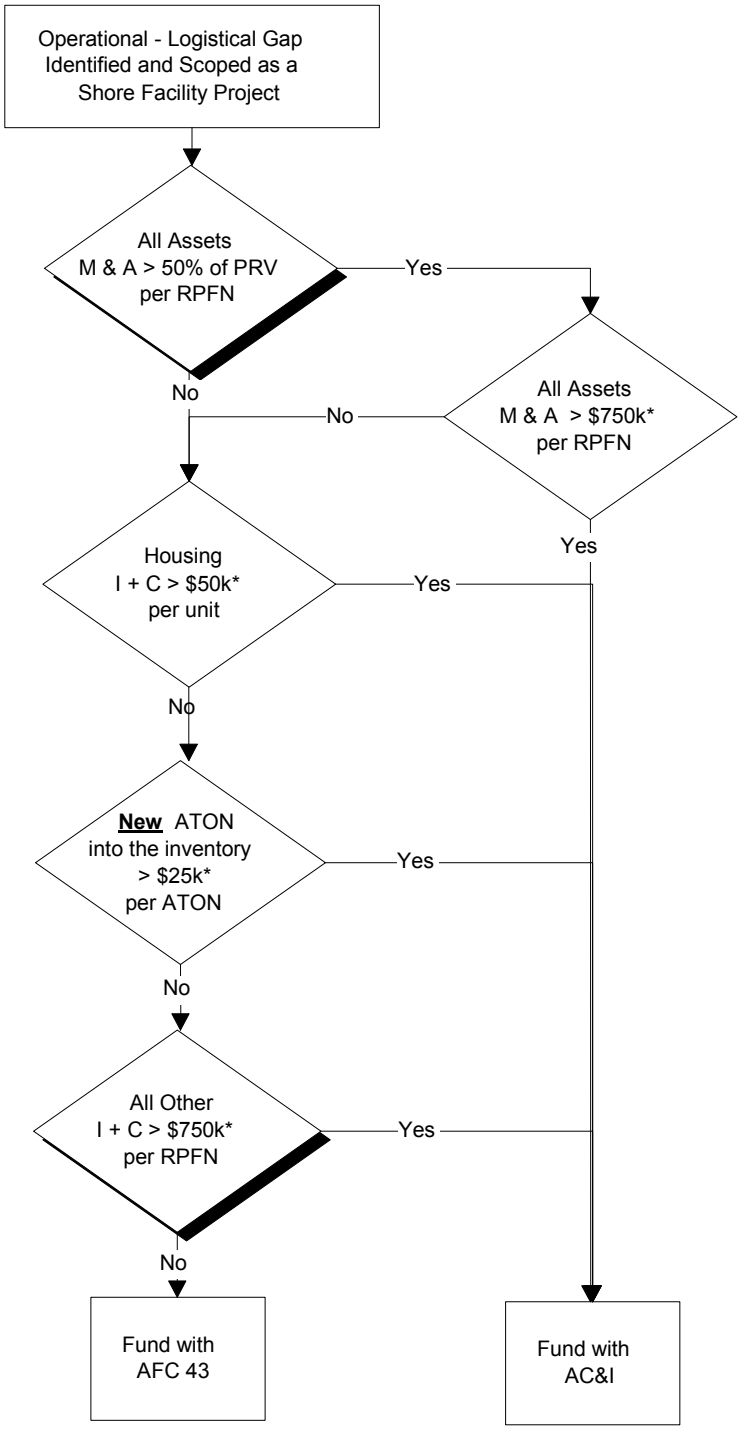

- **For GCI = 1.00. If M&A>50% of PRV, then M&A&I&C cannot exceed $1.5M per RPFN.**

5.N Reserve Training Appropriation (RT) -General Responsibilities

Reserve training funds (AFC-90) are targeted to ATUs, generally the Integrated Support Commands (ISC), to cover the costs of active duty for annual training (ADT-AT), active duty for training other than the annual training requirement (ADT-OTD), (ADSW-RC), meals and berthing for reserve personnel on inactive duty for training (IDT), and reserve travel for readiness management periods (RMP). Administrative costs for RT funded military and civilian billets are covered by a Personnel Support Cost Reserve (PSCR) distribution via AFC-30. ATU and PSCR funds are apportioned at the Headquarters level and specified in annual targets. Upon receipt of the annual targets, the quarterly operating guide is established by program element in the system of accounts. Drill pay, allowances, costs of initial uniform issues, and benefit programs are administered at the Headquarters level. RT funds necessary to cover certain other program costs charged to AFC-01, AFC-20, AFC-30, and AFC-56 are reimbursed to the OE appropriation through the Coast Guard Refund Program. The reserve training program will refund the OE appropriation to the full SPC costs associated with reserve funded active force billets, and for all necessary expenses of supplies, equipment, and services of reserves costs expended within the OE appropriation.

5.N.1 Objectives

Management of the reserve program by district commanders shall be based upon the Reserve Forces Program Planning Factors, and the following guidelines:

a. Maximize days of training.

b. Attain and maintain the authorized Selected Reserve strength.

c. Provide augmentation training, which contributes directly to mobilization readiness and, if possible, benefits active force missions.

d. Provide uniforms, organizational clothing, safety and personal protective gear, and personal issue equipment (PPE) for reserve personnel.

5.N.2 RT vs. Other Appropriations Responsibilities

Certain RT funds are refunded into the OE AFCs to support the Reserve Training Program. This is intended primarily as an administrative convenience, and is mechanically handled as described earlier in this chapter.

While a refund between OE and RT funds is necessary and desirable, there is a requirement to clearly define the funding responsibility of each appropriation. The authorized RT expenses outlined in section 5.N include pay and support costs for all active duty and civilian personnel engaged in administration of the Reserve Training Program, including personnel serving in reserve divisions at Headquarters, personnel on district staffs, and personnel serving in billets designated as RT support billets at HRSIC, FINCEN, RTC Yorktown, TRACEN Cape May, TRACEN Petaluma, and recruiting commands. G-WT will conduct an annual review of the full time support positions (FTS) funded by the RT appropriation to ensure that such positions (either directly or by representation) provide support to Reserve programs, personnel, training, etc. Based on this review, G-WT will add or delete RT funded FTS billets from the PAL. The Resource Director (CG-8) will pursue RT appropriation funding on budget to cover entitlement growth for FTS billets enacted under NDAA, DOD or other legislation in order to preserve RT funds for their congressionally mandated purpose

5.N.2.a Funding of Multi-Mission Facilities

RT funding of multi-mission facilities should be based on the long-term incremental cost for use of that facility for RT. For the training center, the split between OE and RT appropriations will be based on the percent of long-term training capacity necessary for RT. This includes Class “A” schools, ADT (Class “C” schools) training, and an appropriate share of support. Changes to the training levels required by the RP will require corresponding changes to the RT/OE funding relationship.

5.N.3 Active Duty Training Program

Active duty programs for IADT, annual training requirements (ADT-AT) and other training duty (ADT-OTD) will require accurate cost estimating, close coordination between ISC reserve administration and financial staffs regarding obligation and liquidation of orders, and careful record keeping, to maintain the status of these funds. IADT will be supported by AFC-01. ADT-AT and ADT-OTD will be supported by ISC controlled AFC-90 funds.

5.N.4 Active Duty Special Work

Active duty special work in support of the reserve component (ADSW-AR) will be supported by both Headquarters and ISC controlled AFC-90 funds.

Active duty special work in support of the active component (ADSW-AR) will be supported by unit AFC-30 funds.

5.N.5 Inactive Duty Training

Inactive Duty Training (IDT) pay will be administered through G-WTR controlled AFC-90. HRSIC will effect IDT pay disbursements, rations, travel, i.e., commuted rations (COMRATS), and clothing maintenance allowance (CMA). Other IDT costs (rations-in-kind (RIK) and IDT berthing), and training aids or materials will be supported through ISC managed AFC-90. Initial uniform issues for reserve recruits not attending IADT will be funded through G-WTR controlled AFC-90.

5.N.6 Voluntary and Involuntary Recalls

District commanders are granted authority to recall reservists for voluntary service for domestic emergencies IAW 10 U.S.C § 1230 (D). DHS may recall reservists for involuntary service IAW U.S.C. § 712.

5.N.7 Adjustments in Reserve Funding Levels

AFC-90 (with related program element targets) is established through the annual budget process and related financial management systems. RT program element adjustments may be accomplished, as permitted by FINCEN procedures. The transfer of funds between fiscal quarters must be approved and coordinated by G-WTR.

The transfer of funds between appropriations is not permitted. Through an agreed upon methodology, the reserve program at G-WTR refunds the AFC-01 appropriation for full time support (FTS) billets.

5.N.7.a Operating Target

The AFC-90 operating target (at both the Headquarters and ISC levels) must never be deficient. If deficient, remedial action must be promptly taken.

5.N.8 RT-Funded Civilian Positions

Upgrades of civilian positions funded by RT funded positions require prior approval by G-WTR and may be allowed only after the additional funds source for the FY in which the upgrade occurs has been determined.

5.N.8.a Overtime for Civilian Employees

Overtime for civilian employees is authorized and administered in accordance with the criteria set forth in Management of Civilian Overtime, COMDTINST 12550.4 (series). G-WTR will administer ceilings for overtime pay.

5.N.9 Reports on Reserve Training Funds

G-WTR will generate formatted reports on a regular basis to monitor quarterly account carryover requirements and funds available for redistribution.

Further reports may be requested on a case-by-case basis as required to audit quarterly reports.

5.N.10 Un-funded RT Requirements Under $1,000

Un-funded RT requirements up to $1,000 should be absorbed in the current year within available funds. Therefore, as a matter of policy, funding requests under $1,000 will not normally be processed. However, un-funded requirements may be aggregated and submitted to G-WTR via the ISC and MLC.

5.N.11 Audit of Reserve Training Funds

On a biennial basis, or when deemed necessary by G-WTR the commanding officer, MLCs will conduct a routine financial audit of the ISCs reserve training funds. The objective of such a financial audit is to ensure internal funds control is maintained. Financial transactions of a reserve ATU should be examined to the extent necessary to determine the following:

a. Does the ATU have effective control of its funds? (targets, expenditures, and liabilities)

b. Is the ATU properly accounting for its funds? (targets, expenditures, and liabilities)

c. Do the ATUs financial records/reports contain accurate, reliable, and useful data presented in the prescribed format?

d. Is the ATU fully complying with rules and regulations?

e. Is the ATU properly and fully funded for the current fiscal year according to the current year's program standards?

f. Is technical assistance needed?

5.O Environmental Compliance and Restoration (EC&R)

The Coast Guard Authorization Act of 1989 (P.L. 101-225) created the Coast Guard Environmental Compliance and Restoration Program and Appropriation. The purpose of the EC&R Appropriation is to carry out a program of environmental compliance and restoration at all current and former Coast Guard facilities. It involves the identification, investigation, and cleanup of contamination from hazardous substances and pollutants; and hard engineering fixes (i.e., physical changes) on Coast Guard buildings and structures for the purpose of complying with environmental laws to prevent contamination or preclude an environmental liability from developing.

5.O.1 Uses of EC&R

a. Projects required solely to achieve compliance with federal, state, and local environmental requirements, including studies, development of new permits, site contamination characterization, waste minimization, remediation and associated monitoring, pollution source inventories, pollution control facility construction, modifications, equipment purchase and installation.

b. Hard engineering fixes (physical changes) which encompasses a three part test:
   i) The expense must be for a physical change to an asset, including the cost of any study or design necessary to effect the change; and
   ii) The physical change must be driven by a federal, state, or local environmental law or executive order (e.g., Spill Prevention, Control, and Countermeasure); and
   iii) Compliance with the law, regulation, or executive order must be the main reason for undertaking the project at the time of executing the work.

c. Salaries, benefits, and related costs for EC&R billets.

d. EC&R program management costs required solely for the purpose of executing a specific funded EC&R project (i.e., training, travel, special studies, statutory/regulatory required reporting, etc).

e. Initial permit fee applications, sampling, and analysis.

f. Demolition and removal of unsafe buildings and structures, including buildings and structures at current and former Coast Guard facilities.

5.O.1
Uses of EC&R
(Continued)

g. Costs for legally required asbestos remediation and lead based paint abatement "released or in danger of being released" into the environment for the sole purpose of complying with the environmental law.

5.O.2
Unauthorized Uses of EC&R

The following categories of expenses are not funded from EC&R:

a. Normal operation, maintenance, and repair of real and personal property and replacement of equipment. For example, if abatement (e.g., asbestos removal) is performed as part of, or in conjunction with, a maintenance, repair or construction project, the appropriation funding the project shall be used. If equipment is being replaced because it has reached the end of its service life, even though the replacement equipment may result in a reduction of the amount of regulated waste generated or otherwise assist with meeting environmentally regulatory requirements, the equipment replacement shall be funded from AC&I or OE, depending on the requirements and costs. If the equipment is being replaced **solely** to meet environmental regulatory requirements, including, but not limited to, pollution prevention and hazardous waste minimization, the equipment replacement shall be funded from EC&R.

b. Fines and penalties for noncompliance. Fines and penalties imposed by environmental regulatory agencies for noncompliance will be paid from OE funds.

c. Requirements, which do not fall under the jurisdiction of the Environmental Protection Agency (EPA), including the National Historic Preservation Act (NHPA) and the Occupational Safety and Health Act (OSHA). AC&I or OE will fund these requirements, as appropriate.

d. Studies, assessments, and environmental impact statements required under the National Environmental Policy Act (NEPA). These requirements will be funded by the appropriation funding the project.

5.O.2 Unauthorized Uses of EC&R
(Continued)

e. Disposal of hazardous wastes and other regulated wastes generated by units in the course of day-to-day operations and maintenance activities. These expenses shall be paid from OE funds.

f. Training and other program management costs not directly related to the EC&R program. Environmental training in areas that do not fall under the jurisdiction of the EPA, including, but not limited to NEPA, NHPA, OSHA, and natural resources management shall be funded from OE or AC&I, as appropriate.

g. Restoration and response activities at third party sites, which do not qualify as current or formerly used Coast Guard sites.

h. Expenses associated with the development and implementation of policy and procedures to address compliance activities generated by units in the course of day-to-day operations to ensure compliance with all federal, state, and local environmental laws, regulations, and requirements. These expenses shall be OE funded.

i. New permits required in conjunction with executing a project should be funded by the same funding source.

5.O.3 Spills and Environmental Emergencies

a. Initial response and containment may be funded with OE funds.

b. The affected unit shall coordinate with MLC or Environmental Management Division (G-SEC-3) to affect a refund from EC&R to OE.

c. Post-response remediation costs shall be funded as a regular EC&R remediation project only if the site is a current or formerly used Coast Guard site.

5.O.4 Contamination at AC&I Project Sites

a. All costs associated with determining whether a site is contaminated, borings, sampling, and analysis shall be funded from AC&I Survey and Design (S&D) funds as part of the normal AC&I project planning and execution procedures. (EC&R can be used for this activity for current or formerly used Coast Guard sites that are planned for).

b. If contamination is confirmed, assessment and any immediate contaminant removal shall be funded by EC&R, if the site is a current or formerly used Coast Guard site.

c. Notwithstanding project schedules, compliance with all environmental laws and regulations is required.

5.O.5 Other Guidance

a. See G-SEC if there is a question as to whether EC&R is appropriate.

b. Actual construction of prototypes for major acquisitions shall be funded using the same appropriation from which the project originated. In most cases this would be the AC&I appropriation.

c. Congressionally directed projects may require special consideration as to funding source and will be handled on a case-by-case basis.

d. Refer to the Civil Engineering Manual, COMDTINST M11000.11 (series), for additional EC&R guidance.

5.P Oil Spill Liability Trust Fund OSLTF - Uses

Charges may be made against the Fund when a federal response is declared. The Fund is not available for cleanup costs when the responsible spiller is identified as a federal agency. Expenses for cleanup in cases when the polluter is a Coast Guard facility are chargeable to AFC 30 or the EC&R appropriation.

5.P.1 National Pollution Fund Center (NPFC)

NPFC has responsibility for control of obligations and overall fund management.

5.Q Alteration of Bridges (AB) - Reprogramming Guidelines

The specific amounts of AB funds earmarked for each bridge alteration project are set forth in the congressional-stage budget justification and later, in the report language accompanying the annual appropriations act. The project funding basis is defined as the sum of all funding earmarked by Congress for that particular project. The following guidelines apply:

1. The appropriation manager may approve reprogrammings between existing projects to increase or decrease a project by a cumulative total of not more than $500K or 25 percent of each project's funding basis, whichever is less.

2. Any reprogramming which exceeds the $500K/25 percent limit, involves a new (unbudgeted) project, or involves a project termination other than completion, shall be considered for congressional reprogramming. Prior to executing a congressional reprogramming, the Transportation Appropriations Subcommittee chairmen in the House and Senate must be informed of the proposed action in a letter signed by the Secretary of Homeland Security, and the chairmen must be allowed at least 30 days in which to respond. The AB appropriation manager shall submit the required correspondence via the chain of command.

5.R Retired Pay (RP)

The RP appropriation follows the same reprogrammings guidelines as set forth for the OE appropriation.

5.S Industrial Bases - Responsibilities

Management of industrial activities involves the cooperation of four separate elements: maintenance and logistics engineering support organizations (e.g., MLC, ELC, NESU, CEU, and ESU), supply and purchasing divisions, operational units and the Industrial Support Activity. Due, to the importance of the industrial objective (i.e., providing deport level maintenance, repair, and operational services to assist operational needs), the MLC commander shall require the maximum coordination

5.S
Industrial Bases – Responsibilities
(Continued)

among these organizations. The industrial manager, in cooperation with the MLC engineering staff and the Chief, MLC Finance Division, shall follow the procedures of the Industrial Management Guide (CG-361) for:

a. developing the industrial budget

b. establishing modifying the industrial "overhead" rate; and

c. conducting the review, audit, and analysis of the industrial accounting reports.

5.S.1
Industrial Budget Operating Plan

An industrial budget-operating plan shall be prepared for each industrial facility. The industrial budget shall reflect the coordinated efforts of the MLC engineering staff; Chief, MLC Finance Division; and, the industrial manager. The industrial budget-operating plan provides a yardstick against which the actual billable costs can be compared. The budget operating plan functions as the basis for allocating resource dollars and baseline routine project planning. Reviewers must keep in mind that cost fluctuations due to emergent and casualty response will impact the operating plan. Reviewers must consider the practical applications of Coast Guard mission responses in determining the effectiveness of the planned budget. Revision of the industrial budget-operating plan may be required during the course of the fiscal year, particularly when analysis reveals the need to adjust the overhead rate being charged. Reviewers often fall into the trap of judging effectiveness purely by the overhead rate. If an industrial manager is judged by the overhead rate, the result may be an overhead rate reduced by cutting short-term expenditures necessary for long-term effectiveness, such as equipment and training. Before raising overhead rates, every effort shall be made to reduce overhead costs. Revised budget-operating plans shall be forwarded to G-SLP with footnoted explanations of changes.

5.T Reprogramming

A reprogramming is the reallocation of funds from one Program, Project or Activity to another within the ***same*** AC&I appropriation ***category***. It also includes any significant change in the scope of a project, program or activity as described in a Congressional Stage budget justification or Congressional Report language. Reprogrammings receive significant scrutiny both internally and externally.

New Congressional reprogramming guidelines for the Coast Guard were set forth by the Emergency Wartime Supplemental Appropriations Act 2003 (Public Law 108-11, Section 1601), enacted on 16 April 2003. The old reprogramming guidelines

as they applied to the Coast Guard prior to the 16 April 2003, were not law; rather, they were informal arrangements among the Coast Guard, the Department and Congressional oversight committees.

The new law establishes a blanket rule for reprogramming thresholds including all funds remaining unobligated as of the date of the law in effect. Generally, any movement of funds among PPAs (within the same category) that does not exceed the lesser of $5M or 10% (of either the benefiting or supplying project) is freely permissible. However, these internal reprogrammings still need to be approved by CG-83 or their designated representative. If the amount of reprogramming exceeds these limits, the Coast Guard must notify the House and Senate appropriation committees 15 days in advance.

General Provision

(a) None of the funds provided by this Act, or provided by previous Appropriations Acts to the agencies in or transferred to the Department of Homeland Security that remain available for obligation or expenditure in fiscal year 2003, or provided from any accounts in the Treasury of the United States derived by the collection of fees available to the agencies funded by this Act shall be available for obligation or expenditure through a reprogramming of funds which:

5.T
Reprogramming
(Continued)

(1) Creates a new program

(2) Eliminates a program, project; or activity

(3) Increases funds for any program, project, or activity for which funds have been denied or restricted by Congress

(4) Proposes to use funds directed for a specific activity by either the House or Senate Committees on Appropriations for a different purpose, unless the Committees on Appropriations of both Houses of Congress are notified 15 days in advance of such reprogramming of funds.

(b) None of the funds provided by this Act, or provided by previous Appropriations Acts to the agencies in or transferred to the Department of Homeland Security that remain available for obligation or expenditure in fiscal year 2003, or provided from any accounts in the Treasury of the United States derived by the collection of fees available to the agencies funded by this Act, shall be available for obligation or expenditure for programs, projects, or activities through a reprogramming of funds in excess of $5,000,000 or 10 percent, whichever is less, that:

(1) Augments existing programs, projects, or activities

(2) Reduces by 10 percent funding for any existing program, project, or activity, or numbers of personnel by 10 percent as approved by Congress

(3) Results from any general savings from a reduction in personnel which would result in a change in existing programs, projects or activities, as approved by Congress unless the Committees on Appropriations of both Houses of Congress are notified 15 days in advance of such reprogramming of funds.

5.T Reprogramming
(Continued)

Absent of additional headquarters guidance, the above statutory guideline for FY 2003 are to be followed for future fiscal years.

The following table illustrates the comparison of the old guidelines against the new caps:

Appropriation Reprogramming Authority FY03
The New Guidelines vs. Current Law and Congressional Notification:

APPN	Previous $ Cap	New $ Cap
AC&I	Dollar increase/decrease of more than 15% in project, except when project is less than $I0M, $1M becomes the max amount before Congress approval is needed. For IDS, Congress stipulated a 10% cap for all PPAs greater than $5M.	$5M or 10%, whichever is less.
RDT&E	$200,000 or 25%, whichever is less.	$5M or 10%, whichever is less.
AB	$500,000 or 25%, whichever is less.	$5M or 10%, whichever is less.
OE	$1M or 15%, whichever is less.	$5M or 10%, whichever is less.

Notes:

- RT and RP appropriations have historically followed OE Guidelines and has never been given any previous reprogramming guidelines as it only has two PPA's - Projects and Personnel.
- Baseline is based on the annual appropriated amount (i.e. does not include cumulative multi-year or no-year money).

New language stipulates that only congressional notification, not approval, is required 15 days prior to reprogramming of such funds.

5.T Reprogramming
(Continued)

Examples

1. A program wants to reprogram $900K from a FY99 Coastal Patrol Boat acquisition project to a FY00 Motor Lifeboat acquisition project. Neither project has previously reprogrammed funds from the FY identified. Below are the appropriated amounts:

FY99 Vessel Category
Coastal Patrol Boat: $30M

FY00 Vessel Category
Motor Lifeboat: $15M

Solution: The reprogramming **cannot** be approved because the projects were funded in different fiscal years. Funds can only be reprogrammed between projects in the **same** category and the **same** fiscal year.

2. A program wants to reprogram $900K from a FY00 HU-25 refurbishment project to a FY00 Motor Lifeboat acquisition project. Neither project has previously reprogrammed funds from the FY identified. Below are the appropriated amounts:

FY00 Aircraft Category
HU-25 Refurbishment: $12M

FY00 Vessel Category
Motor Lifeboat: $15M

Solution: The reprogramming **cannot** be approved because the projects were funded in different categories (i.e., aircrafts & vessels). Funds can only be reprogrammed between projects in the **same** category and the **same** fiscal year. Any shift of funds between categories requires a change in legislation (i.e., an act).

5.T Reprogramming
(Continued)

3. A program wants to reprogram $900K from a FY00 HF High Site acquisition project to another FY00 project (in the same category). Neither project has previously reprogrammed funds from the FY identified. Below is the appropriated amount:

FY00 Other Equipment Category
HF High Site: $8M

Solution: The reprogramming ***cannot*** be approved without congressional notification. The BF High Site project can reprogram up to $800K ($8M x 10 percent = $800K, or $5M, whichever is less). The program's desire to reprogram $900K is above this cap.

Effect. Under this scenario, the new guidelines are ***more restrictive.***

4. Deepwater wishes to reprogram $7M from the Maritime Patrol Aircraft project into the National Security Cutter project (both under the IDS category). Neither project has previously reprogrammed funds from these categories in the FY identified. Below is the appropriated amount for the MPA:

FY01 Deepwater Category
Maritime Patrol Aircraft: $100M

Solution: The reprogramming cannot be approved without congressional notification. The MPA project can reprogram up to $5M ($5M is the lesser of $5M or 10% of $l00m). The program's desire to reprogram $7M is above this cap.

5.U Supply Fund

The Supply Fund is a "revolving fund" which maintains itself by selling supplies to Coast Guard appropriation accounts. The Supply Fund was authorized and established by law to provide financing for the continuing cycle of inventory operations involving clothing, food, and general stores items. Generally, the Supply Fund inventory includes low cost, high turnover consumable items and other designated repetitive use items.

5.U.1 Capital Authorization

Funding of the operations of the various unit activities under the Supply Fund stores account is accomplished by means of capital authorization that is granted directly to the unit commander maintaining the stores account. Continued financing of the stores accounts is accomplished by the sale of material held in inventory. This produces revenue with which to restock inventory either by replacement in kind or with other required and authorized material. Capital authorizations constitute dollar limitations on the total value of inventory that may be maintained under the applicable stores account. Subsistence provisions (Stores Account 82) and fuel (Stores Funding of the operations of the various unit activities under the Supply Fund stores account) is accomplished by means of capital authorization that is granted directly to the unit commander maintaining the stores account.

5.U.2 Fund Management

CG-83 shall determine capital authorizations and develop procedures for evaluating the utilization of these capital authorizations by the area commanders and Headquarters units in terms of the objective for which the Supply Fund was established. Changes in capital authorization will be processed using a FTA form.

5.U.3 Surcharge Rates

CG-83 is charged with conducting an annual review of appropriate surcharge rates to be charged on Supply Fund commodities.

5.V Special Deposits, Funds, and Receipts

The servicing accounting office (FINCEN in most cases) shall be responsible for the development of procedures to supplement Headquarters instructions concerning the receipt and handling of miscellaneous monies. These monies cover the miscellaneous funds received from the various types of services rendered by the Coast Guard, including fines, penalties, forfeitures, property, user fees and sales. Such procedures, as a matter of administrative expedience, shall also include collection procedures for funds payable to the Supply Fund resulting from the cash sale of clothing and commissary supplies.

5.W Expired Funds Overview/Annual Funds

Annual funds (e.g., AFC 30) that remain un-obligated at the end of the fiscal year for which they are appropriated are said to "expire" for obligation purposes. In other words, they cease to be available for new obligations. The same principle applies to multiple-year appropriations (e.g., AC&I) as of the end of the final fiscal year for which they were provided.

Expired funds remain available for recording and adjusting obligations (e.g., a purchase order was not recorded in CGOF due to administrative oversight or **A WITHIN SCOPE CONTRACT MODIFICATION** is made) properly chargeable to that account until 30 September of the 5th fiscal year after the close of the fiscal year when the expired fund was available. For example, fiscal year-01 AFC 30 funds are available for the previously mentioned purposes until 30 September 2006. If a contract modification exceeds the general scope of the original contract, for example, by increasing the quantity of items to be delivered the modification amounts to a new obligation and is chargeable to funds current at the time the modification is made.

5.W.1 Availability For Obligation

On October 1st of the 5th fiscal year after the period of availability for obligation (e.g., October 1st, 2006 GIT in our example in the preceding paragraph) the account shall be **closed** and thereafter shall not be available for obligation or expenditure for any purpose. Additional lawful obligations incurred after an account is closed shall be applied to the current year accounts.

5.W.2 GAO Guidance

The General Accounting Office publication **Principles of Federal Appropriations Law** provides guidance on the use of funds, which have expired for obligation purposes. Appropriations managers, AFC managers, project target officers, and ATU officers shall be familiar with and refer to this publication when managing funds, which have expired for obligation purposes. Program element managers shall seek guidance from servicing ATU officers on issues involving expired funds.

5.W.3 Anti-Deficiency Act Concerns

Adjustments to obligations involving expired funds that result in a net increase in obligations to an appropriation have the potential to violate the Anti-Deficiency Act (See section 5.F). To minimize this possibility it is necessary to establish controls and guidelines for managing expired funds.

5.W.4 Expired Funds Management Responsibilities and Policies

Program Element Mangers:

a. Review (monthly) open obligations for all expired funds for the accounts for which responsible. Accomplish this by reviewing open purchase orders, contracts, travel orders, MILSTRIPS etc. Cancel all items that are no longer needed and items that have a low probability of actually being filled. Ensure that necessary entries are made to CGOF accounting records. Address contractual obligations with the cognizant procurement official.

b. Take appropriate actions to identify unrecorded obligations and changes to obligation amounts, resulting in an increase to obligations to your expired program elements as soon as practicable. Although the program element account digits may be the same from year to year, each fiscal year is considered a separate program element. Do not combine the balances of expired accounts. Consider the balance in each fiscal year separately.

c. Refer all issues involving payments or increases to obligations involving closed appropriations (See section 5.W) to your servicing ATU for resolution as soon as practicable.

d. For increases to obligations where appropriation is still available for recording and adjusting obligations (See section 5.V) the following approval thresholds apply:

   (1) Program element managers with assigned comptrollers/supply officers are authorized to approve increases of up to $100 per document. The cumulative increase for the program element that may be approved by the comptroller/supply officer is $500. Make prompt reports on these actions to the ATU officer. Program element managers without an assigned supply officer shall refer all increases to the cognizant group/section supply officer for group/section units and ATU officer for all other units. Group/section supply officers may approve the increases outlined in this paragraph for their group/section units.

5.W.4 Expired Funds Management Responsibilities and Policies (Continued)

(2) Refer increases to obligations that exceed the thresholds outlined in section 5.V.to the ATU Officer for disposition as soon as practicable. ATU Officer guidance is discussed below.

5.W.4.a Administrative Target Unit Officers

1. Monitor expired fund balances. Take appropriate action to preclude over obligation of funds.

2. Refer all issues involving payments or increases to obligations for closed accounts (See section 5.V) to the cognizant Allotment Fund Code (AFC) Manager for the OE and RT appropriations and the cognizant Project Target Officer for all other appropriations.

3. Approve actions that involve increases to obligations in the ATU's applicable AFC/project target provided the account is not closed and there is a sufficient un-obligated balance to cover the increase; ATU's shall not variance funding between AFC's/project targets without prior AFC Manager/Project Target Officer approval. The un-obligated balance is the balance recorded in official accounting records (i.e., CGOF records) and obligations for which there is supporting documentation, but is not recorded in CGOF. Promptly notify the cognizant AFC manager/Project Target Officer if the amount of the increase is greater than $10,000 for a specific document.

4. Increases to obligations that exceed the un-obligated balance as outlined in section 5.V shall be referred to the cognizant AFC/Project target Officer for disposition as soon as practicable.

5.W.4.b AFC Target Unit Officers

1. Monitor expired fund balances. Take appropriate action to preclude over obligation of the AFC/project target. Closely monitor outstanding UDOs and take action to cancel unnecessary obligation documents.

2. Refer all issues involving payments or increases to obligations for closed accounts (See section 5.V) to the cognizant appropriation manager.

3. Approve actions that involve increases to obligations for your AFC/project targets if the account is not closed and there is a sufficient un-obligated balance to cover the increase. The un-obligated balance is the balance recorded in official accounting records (i.e., CGOF records) and obligations for which there is supporting documentation, but is not recorded in CGOF. Notify the cognizant appropriation manager if the amount of the increase is greater than $25,000 for a specific document.

4. Contact the appropriation manager and obtain disposition instructions if an increase exceeds available AFC/project target balances as soon as practicable.

5.W.4.c Appropriations Managers

1. Monitor expired fund balances. Take action to preclude Anti-Deficiency Act violations for the appropriation.

2. Resolve all issues involving payments or increases to obligations for closed accounts (See section 5.V).

3. Resolve issues involving increases to obligations that cannot be resolved at lower levels of the organization.

5.W.4.d Finance Center

1. Provide reports of open documents to ATU, AFC project target officers and to appropriation managers allowing the officials to fully carry out their expired funds management responsibilities.

2. Establish procedures for adjusting CGOF records involving expired funds.

5.W.4.e Inventory Control Points/Yard

1. Provide reports of open documents to ATU, AFC project target officers and to appropriation managers so as to allow the officials to fully carry out their expired funds management responsibilities.

2. Establish procedures for adjusting applicable accounting records involving expired funds.

5.W.5 Closed Accounts

As explained in section 5.V accounts are closed for obligation or expenditure as of October 1, of the five years after the period of availability for obligation. After the period of availability expires, adjustments to obligations and expenditures must be charged to the current year appropriation. Further, there is a limitation of one percent on use of the current appropriation and a special appropriation code that must be cited. For these reasons the appropriations manager **shall** resolve all issues involving payments or increases to obligations for closed accounts.

5.X Gifts Acceptance

Based on statutory authority the Coast Guard has established a gift acceptance program. Coast Guard personnel often encounter circumstances within the day-to-day conduct of their official duties whereby gifts are offered to the Coast Guard. Without specific statutory authority, gift acceptance may constitute an illegal augmentation of the Coast Guard's appropriation. Coast Guard officials identified below have direct or delegated gift acceptance authority derived from the following statutes: 5 U.S.C. § 7342 (foreign gifts and decorations); 10 U.S.C. § 2601 (general gifts); 14 U.S.C. § 92(d) and (f) (gifts of lands and vessels); 14 U.S.C. § 93(h) (gifts of vessels, aircraft and vehicles); and 31 U.S.C. §1353 (gifts of official domestic and foreign travel) an 14U.S.C. 93(i)(m)/(s)(t).

a. Directives Affected - Other instructions concerning the acceptance of gifts include: Relations With the Coast Guard Foundation, COMDTINST 5760.12 (series), Relations With the Coast Guard Academy Alumni Association (CGAAA) and the Coast Guard Academy Parents Association (CGAPA), COMDTINST 5760.13 (series), and the Acceptance and Accounting for Special Projects and Other Gifts to the Coast Guard From Non-Federal Sources, COMDTINST 5760.14 (series).

5.X.1 Gift Acceptance Authority

a. The Commandant has the authority to accept all gifts, including travel, cash, checks, negotiable instruments, stocks, bonds, real property and personal property

b. The Vice Commandant, the Assistant Commandant of Planning, Resources and Procurement (CG-8), and the Chief Financial Officer (CG-8d) have been delegated the acceptance of gift authority for all gifts.

c. Further delegations for acceptance of gifts are delegated to Area Commanders and G-CCS, MLC Commanders and Deputy Commanders, District Commanders and District Chiefs of Staff, The Superintendent and Assistant Superintendent of the Coast Guard Academy as described in the instruction for Acceptance and Accounting for Special Projects and Other Gifts to the Coast Guard From Non-Federal Sources, COMDTINST 5760.14 (series).

5.X.2 Acceptance of Gifts From Foreign Governments

Special rules govern the acceptance of gifts offered by foreign governments. See 41 C.F.R. Part 102-42 for all of the foreign gift rules. All questions regarding acceptance, retention, reporting, or disposal of foreign gifts should be directed to the servicing legal office or CG-83. The following are examples of when a member can accept or not accept a foreign gift:

a. Coast Guard personnel are permitted to accept and retain any non-monetary or monetary foreign gift of minimal value, currently defined (FY 2004) by GSA as $285.00, received by them as a souvenir or mark of courtesy. Coast Guard personnel need not report such gifts.

b. Coast Guard personnel who receive any monetary or non-monetary foreign gift that has a value above the minimal value are prohibited from retaining the gift. Those gifts automatically become U.S. Government property and must be forwarded to CG-8 within 60 days. CG-8 will determine whether the gift will be returned to the foreign donor, accepted and retained by the Coast Guard for official use or as an official decoration, reported as excess property to the General Services Administration, or deposited in the Coast Guard Gift Fund. The following are examples of when a member can or cannot accept a foreign gift.

5.X.3 Acceptance of Gifts from Non-Federal Sources

Any gifts received in foreign countries from donors who are not a foreign government (e.g., corporations, private associations) are not governed by the rules for the acceptance of gifts offered by a foreign government. For further guidance on acceptance of gifts from non-foreign government, refer to the policy in the Acceptance and Accounting for Special Projects and Other Gifts to the Coast Guard from Non-Federal Sources, COMDTINST 5760.14 (series).

5.X.4 Gifts of Foreign Travel

Gifts of official foreign travel, like domestic travel expenses, must be approved in writing prior to the beginning of the actual travel. The Commandant may approve gifts of foreign travel in accordance with DHS Management Directive 0160.

Gifts of official travel expenses must be processed in accordance with the procedures set forth in the GSA Travel Rule, 41 C.F.R. Part 304-1. Specifically, the acceptance request is normally accepted 30 days prior to travel. The foreign travel request is sent to CG-8 and must include the following information: the name, address and description of the non- federal source; the nature of the event to which the travel is related; the justification for attendance by Coast Guard personnel at the event; and the justification for acceptance of travel expenses. For emergency foreign travel, contact CG-8 for information. Format for the acceptance of payment for domestic and foreign travel can be found in the Acceptance and Accounting for Special Projects and Other Gifts to the Coast Guard From Non-Federal Sources, COMDTINST 5760.14 (series).

5.X.5 Management of Gifts of Personal and Real Property

Gifts of personal property and real property shall be used and accounted for in accordance with applicable directives (e.g., Coast Guard Morale, Well-Being and Recreation Manual, COMDTINST M1710.13 (series), Property Management Manual, COMDTINST M4500.5 (series), and Real Property Management Manual, COMDTINST M11011.9 (series).

5.X.6 Management of Gifts of Securities

CG-83 is designated custodian of all securities received as gifts. CG-83 or its designee exercises voting rights with respect to proxies, determine the deposition of all stock options offers and dividend payments, and decides when to convert securities to cash, (unless such a disposition is specifically prohibited under the terms of the gift).

CG-83 has the overall management of gifts to be deposited into the Gift Fund.

5.X.7 Endowments and Trust Funds

Any direct offers of an Endowment or Trust Fund cannot be accepted by a Coast Guard unit and must be referred to CG-83 for consideration.

5.X.8 Deed of Gift

There are only two circumstances in which a Deed of Gift is allowed for gift acceptance. These circumstances are:

a. A Deed of Gift is allowed for gifts of boats, vessels, vehicles, and artwork.

b. Whenever a gift has a condition including a revisionary clause by the donor. For further information on a Deed of Gift contact CG-83.

Enclosure (5-1) Summary of Change in Financial Plan Signature Authority

1. This summarizes delegation of signature authority for approval of all CIFPs and Reimbursable Agreements for Operating Expense (OE) and General Funds (GF) appropriations, including Acquisition, Construction & Improvement (AC&I), Alteration of Bridges (AB), Environmental Compliance & Restoration (EC&R), Research, Development, Test & Evaluation (RDT&E), Retired Pay (RP), Reserve Training (RT), Boat Safety (BS), and Oil Spill Recovery, Coast Guard (OSR) appropriations.

   a. OE Reimbursable Agreements

      i. The Reimbursable Program Budget Analyst, CG-831 may sign all OE Reimbursable Agreements when the Coast Guard provides all the services detailed in section 6 of OPSTAGE (Distributed Reimbursables), upon approval of Final OPSTAGE, which is signed by CG-8.

      ii. The Reimbursable Program Budget Analyst, may also sign all OE Reimbursable Agreements listed in section 7 of OPSTAGE (Undistributed Reimbursables), upon approval of the Final OPSTAGE and associated CIFPs.

      iii. New OE reimbursable agreements not listed in sections 6 and 7, and associated CIFPs must follow the CIFP approval chain outlined in paragraph 1.b.

      iv. CG-831, the OE Appropriation Manager and Assistant Manager have the authority to sign Section 6 and 7 Reimbursable Agreements (OE) for the Reimbursable Program Budget Analyst, when necessary in their absence.

   b. GF Reimbursable Agreements

      i. The General Funds Appropriations Budget Analyst, CG-831 may sign all Reimbursable Agreements for the GF appropriations, less AC&I.

      ii. The General Funds Appropriations Senior Budget Analyst, CG-831, may sign all Reimbursable Agreements for the GF appropriations.

      iii. New reimbursable agreements and associated CIFPs must follow the CIFP approval chain outlined in paragraph 1.c.

   c. Change in Financial Plans (CIFPs). The dollar threshold signature authority will be as follows:

i. $1 to $500K – Budget Analyst, CG-831 (OE) (Excludes reprogrammings)
Budget Analyst, CG-831 (GF, less AC&I)

ii. Up to $1M – Asst. OE Appropriation Manager, CG-831 (OE)
OE Appropriation Manager, CG-831 (OE)
Senior Budget Analyst, CG-831 (GF)
General Funds Appropriations Manager, CG-831 (GF)

iii. Up to $5M – CG-831

iv. Any Amount – CG-83d, CG-83, CG-8d, and CG-8

2. The approval levels in this summary do not take the place of appropriate level of policy approval for these financial transactions. Policy approval must be obtained first.

Enclosure (5-2) Fund Request Formats

1. **Message Format**.

FM: (ATU)

TO: COMMANDANT//G- (Operating/Support Manager), G- (AFC/Target Mgr), G-(Appn Mgr)//

INFO (CHAIN OF COMMAND)
BT
UNCLAS //N07l30//
SUBJ: REQUEST FOR (Appn) FUNDS (AFC/Project)

A. (Ref if any)
1. (AFC/Project) funds of $(Amount) are requested (Qtr) FY-(YR)
2. Justification, details, etc.

BT

2. **Letter Format**.

Use comparable format. Address to Manager/Support Manager.

Copies to AFC Target Manager and Appropriation Manager.

All requests must clearly state actual amount requested, AFC/Project, quarter, and FY with justification and details.

6.A Situation

This plan has been developed to provide policy guidance and instructions for actions to be taken by the Coast Guard when the failure of Congress to enact either regular appropriations, a continuing resolution, or needed supplements results in a funding hiatus. The Anti-Deficiency Act requires that, in the absence of appropriations, no obligations may be incurred, including salary expenses, except for the protection of life and property, the orderly suspension of operations or as otherwise authorized by law. The following plan complies with the guidance provided by the Attorney General and OMB.

6.B Policy

Upon execution of this plan, in appropriations without funds, the Coast Guard will continue activities otherwise authorized by law, that provide for national security or that protect life and property (exempt missions) as defined in l 6-2, and those activities necessary to terminate remaining functions. Obligations may be incurred for these purposes even though targets are exhausted. However, no disbursements may be made until appropriations are enacted. Personnel and facility utilization shall be as outlined in 6-2 and 6-3, respectively. The duration of the funding hiatus under any circumstance is not expected to be greater than seven calendar days. Any modification of plans for a longer duration will be the subject of additional Headquarters direction.

6.C Schedule of Activities

The orderly termination of activities is set forth in 6-4. Active duty military personnel will continue on duty (See 6-3) and those released from non-exempt activities may be redirected into exempt activities. In general, for civilian employees engaged in non-exempt activity, the Coast Guard will:

1. Initially direct all civilian employees to report to work to secure files, property, etc. until further guidance is provided.

2. Furlough most employees not engaged in exempted mission activity immediately and the remainder as they complete assigned termination duties. Civilian employees funded by multi-year appropriations with funds available, as shown in 6-1, will continue normal activities.

6.D Actions

This plan will be implemented for planning purposes by ALCOAST in advance of an expected lapse in appropriations along with any detailed guidance relative to the specific situation. The order to execute will be issued separately.

6.D.1 Activity by Appropriation

General: Each Coast Guard appropriation may be affected differently depending on the type and duration of the funding hiatus. The specific action required for each appropriation identified below assumes that the funding hiatus directly affects that appropriation. **Note:** Even though its funding may not be affected, there are circumstances when an appropriation not employing personnel must cease activities because funding for the OE appropriation has lapsed and the personnel administering the program of the other appropriations have been furloughed.

Appropriations Employing Personnel

Single Year	Action
Operating Expenses (OE)	Continue operations in authorized missions in accordance with Encl 6-2; authorize activities for orderly termination.
Reserve Training	Continue training for national security missions, support of exempted Coast Guard missions, conduct activities involving joint exercises with DOD and orderly termination of remaining functions.
Acquisition, Construction And Improvements (AC&I)	Continue projects in support of authorized missions in Encl 6-2 with funds apportioned until such funds are exhausted and then terminate all activity except for the protection of life and property.

6.D.1
Activity by Appropriation
(Continued)

Appropriations Employing Personnel

Multi Year	Action
Research, Development, Test and Evaluation (RDT&E)	Continue projects and personnel with funds apportioned until such funds are exhausted and then terminate all activity except for the protection of life and property.
Oil Spill Liability Trust Fund (OSLTF)	Continue projects and personnel with funds apportioned until such funds are exhausted and then terminate all activity except for the protection of life and property. Note automatic apportionment each new FY.
Environmental Compliance and Restoration (EC&R)	Continue projects and personnel with funds apportioned until such funds are exhausted and then terminate all activity except for the protection of life and property.
Yard Fund	Continue projects and personnel with funds apportioned until such funds are exhausted and then terminate all activity except for the protection of life and property.

Appropriations Not Employing Personnel

Single Year	Action
Retired Pay (RP)	Obligations may be incurred only to ensure the safety of life and property.

6.D.2 Activity by Mission

Mission	Action
Operating Expense	
Search & Rescue (SAR)	Maintain readiness status. Respond to usual SAR incidents. Minimize indirect, preventative actions.
Aids to Navigation (SRA/RA)	Continue normal operation of radio aids. Maintain readiness status and respond to normal outages for short-range aids. Minimize indirect preventative actions.
Port & Environmental Safety	Continue direct activities relating to port safety and security including special interest vessels, and monitoring of dangerous and hazardous material transfers. Cease routine patrols and facility inspections.
Commercial Vessel Safety (CVS)	Continue direct activities for important safety functions including inspections required for certification of vessels, drydock inspections, foreign vessel and OCS inspections, and investigations of casualties and accidents. Cease new construction inspections unless in the final phase when the vessel will be immediately placed in service, reinstallations, seaman documentation and licensing, and vessel documentation and admeasurements.

6.D.2
Activity by Mission
(Continued)

Mission	Action
Enforcement of Laws at and Treaties (ELT)	**A**. Drug Interdiction - Continue current level. **B**. Fisheries Enforcement - Foreign Vessels - Maintain minimum activities consistent with detection and enforcement of Fisheries Management and Conservation Act violations. Domestic Vessel - Respond to suspected or observed violations only. **C**. Other - Only for the protection of life and property.
Marine Science Activity (MSA)	Terminate all activities except international ice patrol and National Data Buoy Center support.
Marine Environmental Response (MER)	Respond to discharge or potential discharges of hazardous substances and oil spills. Cease routine harbor patrols and facility inspections.
Ice Operations (PIO/DIO)	Continue current activities in support of DOD and National Science Foundation missions. restrict domestic ice operations to movement of critical energy supplies, SAR and prevention of flooding.
Military Readiness (MO/MP)	Continue all current activities including recruiting and entry level training.
Recreational Boating Safety (RBS)	Terminate all activities except monitoring of safety defect notifications.

6.D.2
Activity by Mission
(Continued)

Mission	Action
Waterways Management (WWM)	Continue VTS operations at current levels.
Bridge Administration	Terminate all activity.
Administration & Support	Continue with military personnel and the number of essential civilian personnel only those activities that directly support exempt missions and safety of life and property including direct medical care, mission essential training, maintenance, communications, finance and supply, and security of government property and facilities. Overseas indigenous employees may be continued as required by the State Department procedures or Status of Forces Agreements.
Support of Other Agencies	Activities in support of DOD and other government agencies whose missions are continuing will be supported by associate Coast Guard forces. Units under Navy (or other DOD) OPCON will continue operations as directed by the Operational Commander.
Reserve Training	Continue training for national security missions, support of exempted regular Coast Guard missions, scheduled exercises with DOD forces, and orderly termination of remaining functions.

6.D.2
Activity by Mission
(Continued)

NOTE: Direct activities include maintenance of readiness status, response to incidents, SAR cases, and threats. Minimum patrols may be conducted in missions where performance depends on surveillance and Coast Guard presence in areas of concern.

Indirect activities include routine patrols, inspections, studies, conferences, and similar general efforts. All civilian employees should be considered for potential furlough, whether or not they are employed in exempt mission, on the basis of the criteria in 6-3. Civilians retained to support exempt mission activities must be directly involved in the exempt mission (i.e., the exempt mission could not be accomplished or safety continued without that employee).

6.D.3
Activity by Category of Personnel Military

All active duty military personnel may continue on duty and will be paid after appropriations are enacted. However, personnel not required for exempt missions or shutdown activities should not be employed when their work will incur additional obligations for non-exempt activities (military pay and allowances are not in question, but other new obligations such as travel, supplies, etc., are not valid unless in support of authorized (exempt) activities). Personnel in a travel status should complete scheduled travel unless otherwise directed by competent authority. Duties of military personnel released from non-exempt activities may be redirected into exempt mission activities. Personnel employed by multi-year appropriations may be paid as long as funds are available. Inactive duty reserve personnel shall continue training for national security missions, support of exempted regular Coast Guard missions, scheduled exercises with DOD forces, and orderly termination of remaining functions.

6.D.3.a
Civilian

Personnel employed by multi-year appropriations and other funding sources may continue on duty and will receive regular pay as long as funds are available (AC&I, RDT&E & Yard Fund). Personnel employed by single year appropriations that are exhausted may only continue work if engaged in exempt activities or in orderly shutdown operations. All others not so engaged will be furloughed and directed to maintain contact with their command in order to facilitate timely return to duty when so directed by competent authority. Civilian employees so furloughed may not voluntarily perform services for the

6.D.3.a Civilian (Continued)

government. G-WPC will provide sample furlough letters to meet the specific circumstances of the funding hiatus. Cognizant personnel offices will advise employee unions of impending shutdown and furlough plans. Civilian personnel are to be classified into the following categories.

6.D.3.b Category A

Civilian personnel not engaged in exempt mission activities that are to be furloughed immediately but not later than noon of the first working day. Total civilian employees classified Category A should not be less than 50% of the total of Categories A, B, C and D.

6.D.3.c Category B

Civilian personnel not engaged in exempt mission activities that are retained for orderly termination activities and must be furloughed as soon as possible, but not later than close of business of the first working day. Total civilian employees classified Category B should not be less than 35% of the total of Categories A, B, C and D. The combined total in Categories A and B should not be less than 85%.

6.D.3.d Category C

The minimum number of civilian employees essential for security of government personnel, property and fiscal assets, and critical public works functions. Total civilian employees classified Category C should not be more than 5% of the total of Categories A,B,C and D.

6.D.3.e Category D

Civilian personnel directly engaged in exempt mission activities or direct medical care (i.e., the exempt mission could not be accomplished or safely continued without that employee) that will continue to work and not be furloughed. Total civilian employees classified Category D should not be more than 10% of the total of Categories A,B,C and D.

6.D.3.f Category E

Civilian personnel paid by other than annual appropriations who are not affected by a lapse in appropriations and OE industrial employees under Account 38 whose salary and activities are covered by previously funded formal work orders.

NOTE: The overall percentage goals for Categories A, B, C and D should be reflected in district, Headquarters unit and Headquarters office contingency plans, but may be adjusted when a large percentage of the civilian work force is engaged in

6.D.3.f Category E (Continued)

exempt activities such as firefighting, security, direct medical care, and other essential services and it is not practical to cover these duties with military personnel released from non-exempt activities or Category E Employees.

6.D.3.g Coast Guard Auxiliary

Funds in support of exempted Coast Guard missions may be obligated for use by the Auxiliary. Normal internal Auxiliary functions funded by private sources are not affected.

6.D.3.h Non-Appropriated Fund Employees

Non-appropriated fund employees may continue if no obligation of Coast Guard appropriated funds is involved or as otherwise authorized.

6.D.4 Activity by Facility

Category	Action
Coast Guard Owned Property	All Coast Guard operating units shall be maintained in a readiness condition consistent with their mission status during the period. Facilities not exempt by mission or appropriation shall retain sufficient security and maintenance personnel to properly safeguard government property.
Leased and Other Agency Property	If not covered by exemptions, contact leasers or parent agency to arrange adequate security.

6.D.5 Shutdown Plan - Prior to Shutdown

1. Commanding officers, area, MLC and district commanders, and Headquarters offices chiefs and staff divisions identify activities and personnel who will continue under the current funding status. Develop a list of civilian personnel by Category A to E. Insure that all civilian employees are notified of a possible shutdown and their category under the plan.

2. Commanding officers forward to MLC/district commanders their recommendations for continuing or terminating activities under their jurisdiction, including civilian personnel to be furloughed. ACTEUR and CO's of Headquarters units forward recommendations to appropriate Headquarters office chiefs.

6.D.5
Shutdown Plan - Prior to Shutdown
(Continued)

(a). All commands/districts/offices develop plans for

3. Activities not to be continued to:

(a). Consolidate and store files.

(b). Safeguard and dispose of classified material.

(c). Protect government property.

(d). Notify the public and other agencies of termination plans.

(e). Document the status of projects to facilitate resumption when regular operations are resumed.

(f). Process appropriate personnel files, payroll and other administrative documentation.

4. Once the order to implement shutdown plan is received:

(a). Local contingency plans should be modified in accordance with the instructions governing the immediate situation.

(b). Labor unions that have been granted exclusive recognition must be advised of the requirement to furlough.

(c). Any specific requirements of labor contracts must be followed in implementing the furlough.

(d). In areas where civilian personnel are not collocated with their servicing civilian personnel office, furlough letters should be prepared in advance and placed with the unit commanding officer for release upon notification to execute.

Day 1

a. All employees are directed to report to work each day until they are furloughed.

b. Units and personnel away from their regular duty stations are contacted and are instructed to return or to maintain contact pending resolution of their status.

c. Civilian personnel offices coordinate issue of furlough notices to employees who will not be continued on duty. Category A personnel shall be furloughed immediately, but not later than noon Day #1. Category B personnel will be furloughed as soon as their termination activities are complete but not later than close of business Day #1.

d. Area MLC and district commanders, ACTEUR, commanding officers of Headquarters units, and Headquarters offices chiefs and staff divisions issue instructions for continuation or termination of activities.

Day 2

a. ATUs develop funding plans for projects and activities to be continued. Obligation and disbursement procedures for multi-year funds, and obligation only procedures for activities without appropriations shall be in accordance with separate fiscal guidance promulgated by CG-83.

(1). All echelons insure termination of non-exempt activity is complete.

Day #3 and continuing

a. Commanding officers of military personnel designate personnel to maintain normal duty schedules and perform exempt missions.

b. ATUs establish continuing review program to assess funding status for all appropriations.

Weekend days (if weekend occurs before Day #3, slip all schedules accordingly)

a. Continue all operations at normal weekend levels including all operational activity to provide for the national security or to protect life and property.

This page intentionally left blank.

7.A Financial Policy for Property

To provide the policy for the accounting treatment of real and personal property.

This policy applies to all real and personal property owned, leased or otherwise held by the United States under the Coast Guard's administrative control, except for weapons and electronic systems utilized by the Coast Guard but under Navy control. Also excluded is capitalized internal use software, which is addressed in a separate chapter.

7.A.1 References

a. Statement of Federal Financial Accounting Standards (SFFAS) #6 "Accounting for Property, Plant and Equipment"

b. Finance Center Standard Operating Procedure, FINCENSTFINST M7000.1, chapter 11.

c. Real Property Management Manual, COMDTINST M11011.9B (series), (except as superseded by Reference #4 below) per G-S letter of 30 Nov 01, Subject: Real Property Asset Management Manual.

d. Real Property Asset Management Manual, COMDTINST M11011.10 (series). http://isddc.dot.gov/OLPFiles/USCG/010441.pdf

e. Civil Engineering Manual, COMDTINST M11000.11 (series).

f. Statement of Federal Financial Accounting Standards (SFFAS) #8, "Supplementary Stewardship Reporting"

g. Chief Financial Officers Act of 1990 ("CFO Act").

h. Coast Guard Simplified Acquisition Procedures (SAP) Handbook, COMDTINST M4200.13 (series).

i. Coast Guard Paperwork Management Manual, COMDTINST M5212.12 (series).

7.A.1
References
(Continued)

j. Property Management Manual, COMDTINST M4500.5 (series).

k. Coast Guard Acquisition Procedures (CGAP), COMDTINST M4200.19 (series).

l. Electronics Manual, COMDTINST M10550.25 (series).

m. Motor Vehicle Manual, COMDTINST M11240.9 (series).

7.A.2
Responsibilities

This section lists the offices and their respective responsibilities for Financial Policy concerning Coast Guard property.

7.A.2.a
Director of Finance & Procurement (CG-8)

Develops, promulgates and implements Coast Guard financial management policy for use by Headquarters program/facility managers, area and district commanders, commanders of MLCs and field units.

7.A.2.b
Office of Financial Systems (CG-84)

1. Establishes, designates or designs and certifies all financial systems including hardware and software for financial asset management.

2. Develops financial policy and procedures for real property assets in coordination with FINCEN and G-SEC.

3. Ensures that all designed financial systems provide adequate internal controls.

4. Provides oversight to FINCEN for preparation of financial statements required under the CFO Act.

7.A.2.c
Asset Management Division (CG-842)

1. Provides oversight, analysis and financial management standards for all categories of Coast Guard assets except real property assets.

2. Develops, promulgates and implements policy and procedures for tracking and accounting for personal property for afloat and shore units, e.g., air stations, cutters, ELC, AR&SC, NESU, groups, stations, etc.

7.A.2.c
Asset Management Division (CG-842)
(Continued)

3. Provides overall management of the Coast Guard's Personal Property Program, e.g., General Purpose Property (GPP), vehicles, small boats, electronics, small-arms, buoys/ATONs, Yard Fund and Government Furnished Property (GFP), including reporting and/or verifying assets to FINCEN on an annual basis as necessary.

4. Oversees implementation of internal controls for financial accounting.

5. Develops property management training for all Coast Guard units.

7.A.2.d
Finance Center (FINCEN)

1. Maintains general ledger balances and supporting documentation for valuation of real and personal property.

2. Determines which real and personal property construction and improvement projects meet the criteria for capitalization, enters and monitors these capital projects in the Oracle Projects system.

3. Ensures completed acquisition, construction and improvement projects are removed from the construction in progress account and transferred to the appropriate capital asset accounts. For real property, this transaction is based upon information supplied by the Commander of the MLC or Headquarters unit program manager responsible for the project. For personal property, the Acquisition Project Manager ("APM") is responsible.

4. Ensures all acquired or completed capitalizable land, buildings, structures, and improvements are entered into the capital accounts and designated fixed asset system.

5. Ensures transferred-in real and personal property meeting the capitalization requirements are entered into the capital accounts and designated fixed asset system.

7.A.2.d
Finance Center (FINCEN)
(Continued)

6. Makes appropriate accounting entries upon notification from cognizant higher authority to remove disposed real and personal property assets from the capital accounts and designated fixed asset system.

7. Initiates annual reconciliation of real and personal property subsidiary records to the accounting system. This includes preparing a list of reconciling items for transmittal to the end user to assist in reconciling personal property subsidiary records to the accounting system.

8. Ensures all capitalized real and personal property assets are entered into the designated fixed asset system.

9. Prepares year-end depreciation and other applicable journal entries adjusting journal entries to record the carrying value of real and personal property at the end of the fiscal year.

10. Utilizes capitalize asset balances for property in non-Oracle systems, e.g., ALMIS/AMMIS, SCCR, FLS, CMPlus, etc. to meet financial statement reporting requirements under the CFO Act.

11. Retains procurement, acquisition, transfer and disposal documentation for real and personal property capitalized assets for audit purposes.

12. Develops and publishes financial procedures for real and personal property in FINCEN Standard Operating Procedures directive (reference #2).

7.A.2.e Headquarters Offices

Acquisition Resource Management Staff (G-A-1), Office of Funds Management (G-SRM), Assistant Commandant for Operations (G-O) and Assistant Commandant for Human Resources (CG-831):

1. Responsible for designating an APM for each four digit AC&I project listed on the AC&I Executive Management Report.

2. Ensures timely, complete, and accurate recording of vessels, aircrafts, electronic systems and other major systems transferred from Other Government Agencies ("OGAs").

7.A.2.f Office of Electronic System (CG-64)

1. Develops, promulgates, and implements policy and procedures for management of electronic systems and equipment.

2. Provides oversight and analysis of policy and procedures of physical inventories of electronics.

3. Conducts annual certification of assets listed in the property system as of 30 September and forwards to FINCEN.

7.A.2.g Office of Civil Engineering (G-SEC)

1. Provides oversight and policy for the Coast Guard real property program.

2. Ensures that all established policies and procedures governing the accounting for real property construction, acquisitions, and disposals are followed by all Coast Guard civil engineering organizations.

3. Works closely with CG-84 and FINCEN to ensure that all acquisitions, disposals, and descriptive changes to real property assets are entered into the Coast Guard fixed asset and financial systems.

7.A.2.h Coast Guard Yard/AR&SC

1. Responsible for accounting and payment of all government and commercial bills. Coast Guard Yard is responsible for ELC/ICP and AR&SC is only responsible for AR&SC transactions.

2. Retains procurement, acquisition, transfer and disposal documentation for capitalized real and personal property assets for audit purposes.

3. Ensures all capitalized real and personal property assets are entered into appropriate accounting/property system, i.e., SCCR/CMPlus or designated fixed asset system.

4. Reports fiscal year-end values of real and personal property capitalized assets to FINCEN as of 30 September.

7.A.2.i Commanders for Area, District, MLC's and Headquarters Program Managers

1. Develops, promulgates, and implements policy and procedures as necessary for the management of personal property.

2. Ensures unit and subordinate units maintain financial and physical accountability of personal property, including timely and accurate recording of personal property transactions into the appropriate system, e.g., FPD, CMPlus, FAM.

3. Ensures timely and accurate recording of transferred-in personal property assets from OGAs.

4. Ensures all appropriate ownership, valuation, and disposal documentation for personal property is timely forwarded to FINCEN.

7.A.2.j
Commanders, MLC's, Commanding Officers of Civil Engineering Units (CEUs), Commanding Officer of Facility, Design Construction Centers (FD&CC) and Commanding Officers of Headquarters Units

1. Informs FINCEN of all real property construction and improvement projects meeting criteria for capitalization.

2. Ensures all real property acquisitions, disposals status (active or excess) and descriptive changes are promptly entered into the designated fixed asset system and required supporting documentation is provided to FINCEN in a timely manner.

3. Ensures all real property acquisition, construction and improvement projects are timely and accurately entered in FPD so that capital projects can be identified and costs tracked by FINCEN.

4. Ensures that FINCEN is notified in a timely manner when capital projects are completed and all required documentation is provided.

5. Prepares and signs any required written certifications of real property inventory accuracy in a timely manner.

7.A.2.k
Unit (Personal Property Only)

1. Responsible for routine, recurring functions that support the tracking and accounting for all personal property under unit control, e.g., GP property, software, electronics, small boats, vehicles, etc.

2. Enters purchases for property into FPD, and reconciles PES reports in accordance with reference #2.

3. Ensures contracting and/or purchasing official provides a copy of all accountable personal property procurement documents to unit property officer.

4. Ensures accounting string (data) accuracy for personal property assets is verified by a contracting officer and/or purchasing official, e.g., object class code for capitalized or non-capitalized asset.

7.A.2.k
Unit (Personal Property Only)
(Continued)

5. Oversees property officer's responsibility for entering transactions for purchases, transfers-in and disposals into appropriate asset system, i.e., CMPlus, designated fixed asset system within 30 working days of transaction.

6. Ensures cutters underway enter transactions into appropriate property accounting system within 30 days upon return to homeport.

7. Provides copies of acquisition, transfer, and disposal documents for capitalized personal property to FINCEN for retention and audit purposes.

8. Retains copies of acquisition, transfer, and disposal documentation in accordance with reference #11.

9. Conducts annual physical inventory of capitalized personal property during the fourth quarter of the fiscal year, i.e., assets costing $25,000 or more.

10. Conducts annual physical inventory of non-capitalized, accountable personal property in accordance with reference #12.

11. Ensures original certification letter is signed by CO/OINC and forwarded to FINCEN within five working days after 30 September, certifying that the physical inventory count of capitalized property was conducted during the fourth quarter, on-hand quantity was reconciled against personal property records, and discrepancies reported to FINCEN.

12. Retains copies of certification letter, property listing, count sheets, adjustment documents, etc., in unit files for three years after end of fiscal year in which inventory occurs.

7.A.2.l
Acquisition Project Manger

1. Responsible for establishing data elements such as project manager name, name of project, key members, six digit program element data, etc., for FINCEN to enter into Oracle Projects.

2. Acts as point of contact for FINCEN as to financial status of AC&I projects and all assets under construction and delivered.

3. Responsible for timely completion of periodic PMDS forms which is forwarded to FINCEN to document assets procured with AC&I project funds.

4. Submits final closeout PMDS forms to FINCEN upon completion of projects.

5. Reconciles accounting systems records with AC&I project records on a monthly basis.

7.A.2.m
District Boat Manager

1. Responsible for accountability of boats under area of responsibility ("AOR") and entering boat accounting data into designated fixed asset system.

2. Ensures all boat transactions are supported by documentation and all acquisition, transfer, and disposal documents are timely forwarded to FINCEN.

3. Conducts annual physical inventory for all boats and retains copy in accordance with reference #11.

7.A.2.n
Regional Motor Fleet Manager

1. Responsible for accountability of vehicles and trailers under AOR and for entering accounting data for vehicles and trailers into designated fixed asset system.

2. Ensures all transactions for vehicles and trailers are supported by documentation and all acquisition, transfer, and disposal documents are timely forwarded to FINCEN.

7.A.2.n
Regional Motor Fleet Manager
(Continued)

3. Conducts annual physical inventory for all vehicles and trailers and retains copy per reference #11.

7.A.3
Accounting Policy for Real Property

Real property within the Coast Guard shall be accounted for as stated in this section.

7.A.3.a
Capitalization -Land

1. All land currently owned by the United States and under Coast Guard administrative control will be capitalized regardless of value.

2. Land that is under the administrative control of another federal agency but occupied by the Coast Guard by permit or owned by a non-federal entity and accessed by license will not be capitalized but recorded in the asset system for accountability purposes.

3. Land withdrawn or reserved from the public domain will be maintained in the Coast Guard records for accountability purposes only.

7.A.3.b
Capitalization - Buildings and Structures

1. Capitalize the acquisition and construction of buildings and structures with a total unit cost of $200,000 or greater. Acquisition and construction activity below this threshold as well as any survey and design costs prior to formal commitment will be expensed.

2. All AC&I shore projects shall be considered capital projects while in progress subsequent to formal commitment. The construction cost for any asset less than $200,000 at project completion shall be expensed.

3. All AC&I waterways projects with an estimated cost of $200,000 or more per structure shall be capitalized.

4. Any AFC-43 shore project which meets one or more of the following criteria shall be capitalized:

7.A.3.b Capitalization - Buildings and Structures
(Continued)

(a). The cost for increasing capability or capacity for any building or structure is $200,000 or greater.

(b). The amount of rebuilding ("R") plus improvement ("I") and demolition ("D") for any building or structure is greater than or equal to $200,000 and is greater than the net plant replacement value.

(c). The amount of R+I+D for any one building or structure is greater than or equal to $200,000 and is 50% or more of net book value.

5. Yard Fund assets shall be capitalized in the Yard Fund accounting records.

6. Capitalized real property will be recorded on the Coast Guard's Balance Sheet as part of the "General Property, Plant and Equipment" line item. A description of real property owned or leased will be disclosed separately in the footnotes to the financial statements.

7. The capitalization of a completed building or structure shall occur as of the in-service date (date of final inspection/acceptance) or date of beneficial occupancy, whichever is first.

8. All capital improvements shall be capitalized separately in the asset management and accounting systems.

7.A.3.c Capitalization -Leased Property

Capital leases are leases that transfer substantially all the benefits and risks of ownership to the lessee. If real property is leased under a lease that, at its inception, meets one or more of the following, the lease shall be classified as a capital lease. Otherwise, it shall be classified as an operating lease (per OMB Circular A-11, App. B, an operating lease must not meet any of the following criteria).

7.A.3.c
Capitalization -Leased Property
(Continued)

1. Ownership of the leased property is conveyed from non-federal entity to the United States by the end of the lease term;

2. The option to purchase the leased property at a bargain price is included in the lease;

3. The term of the lease is equal to or greater than 75 % of the estimated economic life of the leased property;

4. The present value of rental and other minimum lease payments, excluding that portion of payments representing executory cost, equals or exceeds 90 % of the fair market value of the leased property at the beginning of the base term;

5. The leased property is not a general purpose asset, i.e., its built, constructed, assembled, or otherwise created, for a special purpose for the United States or, is built to the unique specification of the United States as lessee; or

6. There is no private sector market for the asset.

Real property acquired through a capital lease shall be treated as an asset on the balance sheet and capitalized as an asset in the accounting system.

Real property leased under an operating lease shall be treated as an OE in the accounting system for the period in which the cost is incurred.

7.A.3.d
Operating Lease

An operating lease is a contract between two or more parties creating obligations that are enforceable or otherwise recognizable as law, by which a rightful possessor of real property conveys the right to use and occupy that property, usually for a stated period of time, in exchange for consideration, usually rent. However property owned by one government agency and used and or occupied by another government agency would not require establishing a Lessee and a Lessor contractual relationship between the two agencies. The two

7.A.3.d
Operating Lease
(Continued)

agencies are considered one entity the Coast Guard and owned by other government agency.

A lease can only be entered into by two or more parties, the Coast Guard cannot enter into leases with other federal government agencies, as both agencies are recognized as the same party, specifically the U.S. Government.

The use of property owned by other government agency should not consider as lease for the reason in the above paragraph. Rental costs including repair and maintenance expenses should be paid out of OE as an expense that is not subject to the Coast Guard's OE/AC&I thresholds.

7.A.3.e
Depreciation

1. Land is not depreciated.

2. Buildings and structures are depreciated over the useful life of the asset using the straight-line method with no salvage value.

3. The cost of improvements to buildings and structures is depreciated separately in the asset system over one-half the service life of the associated asset if it has reached at least 50% of its service life, or over the remainder of the asset's service life if it has reached less than 50% of its service life.

   (a) Land – Indefinite
   (b) Buildings – 40 Years
   (c) Structures – 20 Years

7.A.3.f
Stewardship - Real Property

Stewardship Assets are assets whose value may have little meaning or that allocating their costs (i.e. depreciating) would not be useful to financial statement users (SFFAS#6).

Stewardship real property shall be recorded on the Supplementary Stewardship Report and, with the exception of Multi-Use Heritage Assets, not on the Coast Guard's Balance Sheet as part of the "General Property, Plant and Equipment" line item.

7.A.3.f.(1) Stewardship -Heritage Assets

Heritage assets are real or personal property of historical or cultural importance with an indeterminate useful life.

Heritage assets shall be identified only in the property tracking system and aggregated for presentation in the Required Supplementary Stewardship Report.

a. Heritage assets shall be measured on the basis of physical units of issue rather than dollars.

b. Heritage assets will be expensed at the time of procurement regardless of the amount.

7.A.3.f.(2) Stewardship - Multi-Use Heritage Assets

a. Multi-use heritage assets (are currently in operational use) shall be capitalized and depreciated in the property tracking system and will be aggregated with heritage assets for the Supplementary Stewardship Report.

b. Multi-use heritage assets (heritage assets also used for governmental purposes such as are operating lighthouse that is on the National Register of Historic Places) shall be capitalized as a general governmental asset and also reported in the Supplementary Stewardship Report.

c. The breakdown between heritage assets and multi-use heritage assets shall be provided in an accompanying footnote to the Coast Guard's financial statements.

d. Any assets reclassified from heritage to multi-use heritage shall be capitalized in the designated fixed asset system.

e. FINCEN shall ensure all heritage assets currently recorded in the asset accounts have been identified and removed from the financial records.

7.A.3.g Disposal

1. When real property is expected to transfer to another federal entity, it shall continue to depreciate until the time of disposal and then removed from the system at net book value.

2. When it is known with certainty that real property is no longer in service and will either be demolished or transferred to a non-federal entity, it shall be recorded at its expected net realizable value. Any difference in the book value of the property and its expected net realizable value shall be recognized as a gain or loss in the period of adjustment. The expected net realizable value shall be adjusted at the end of each accounting period and any further adjustments in value recognized as a gain or a loss. No additional depreciation shall be taken once such assets are removed from general PP&E in anticipation of disposal. When real property and/or any improvement to that property are disposed of, either by sale, transfer, donation, conveyance resulting from legislation, or demolition, the asset is deleted from the system at net book value.

3. All documentation on disposals must be received by FINCEN.

4. Upon disposal of real property, any personal property located upon the site and remaining under the administrative control of the Coast Guard, such as a lens or other ATON equipment, shall be recorded as GPP.

7.A.3.h Valuation Policy - Real Property

The total cost shall be capitalized. Total costs for the asset shall include all identifiable costs incurred to make it operational for its intended use.

Land shall be valued at historical cost as documented on deeds or other pertinent documents. If historical cost is not available, the land shall be valued by a professional appraisal conducted at the time of acquisition. If not available, land shall be valued by an imputed fair market value in accordance with CG-84 policy.

7.A.3.h.(1) Valuation Policy - Buildings and Structures

a. All buildings and structures acquired after 1 October 1994 shall be valued at actual acquisition cost.

b. All buildings and structures acquired prior to 1 October 1994, except for ATON, have been valued at plant replacement value deflated to the date originally constructed/acquired by the federal government using Consumer Price Index deflators. ATON with a construction cost of $200,000 or greater with value based on actual or average cost of similar structures. ATON with a construction cost below $200,000 are grouped into categories and valued based on the average cost of similar structures.

c. Buildings and structures transferred from other government agencies shall be valued at the transferring agency's net book value. If the net book value is not provided, the Coast Guard shall calculate the net book value by depreciating the original acquisition cost to the date of transfer. The original acquisition shall be deemed the date the United States first acquired or constructed the asset.

d. If the acquisition cost is not available, assets shall be valued at their fair market value at date of transfer to the Coast Guard.

e. Land transferred from another federal agency shall be valued at the original cost to the United States.

7.A.3.h.(2) Valuation Policy - Gift Value

Gifts shall be valued at fair market value through appraisal, but if the owner acknowledges in writing that no appraisal is needed, approximate fair market value shall be established through current property tax records broken down by land and individual improvements.

7.A.3.h.(3) Valuation Policy - Condemnation

Property acquired by condemnation shall be valued in accordance with the appraisal filed by the government with the requisite court.

7.A.3.h.(4) Valuation Policy - Exchange

Property acquired in accordance with the Coast Guard's real property exchange authority shall be recorded at its appraised value.

7.A.3.h.(5) Valuation Policy Capital Leases

Cost of real property acquired under a capital lease shall be equal to the amount recognized as a liability for the capital lease at its inception (i.e., net present value of the lease payments calculated) unless net present value exceeds fair value of the asset. All costs, both direct and indirect, are included in the cost of the project. Such costs, for example, are identifiable direct costs such as project related survey and design, construction, administration, travel and inspection as well as AC&I labor which is calculated as an indirect cost. All costs charged to the AC&I project program elements for survey and design and construction shall be included in the project's cost. Labor costs for AC&I shore projects shall be calculated by FINCEN and include direct labor costs of shore billets and overhead. Labor for major AC&I shore projects shall be allocated directly to the project based on the project's percentage of the total shore budget. Labor costs for minor ATON, waterways and housing shall be calculated as a percentage of the project.

Costs capitalized shall include survey and design costs, construction and inspection. Seek guidance from CG-842 including labor cost for certification.

Any costs incurred subsequent to the in-service date shall be expensed unless more than 2% of the total project cost or $20,000, whichever is greater.

7.A.3.h.(6) Valuation Policy - Fixtures and Equipment

Equipment and other items of personal property that are built into a building or structure or permanently affixed to the property improvement or underlying land becomes a fixture. Fixtures are considered real property assets, if built into or permanently affixed to a building or structure, the fixture's cost should be included as part of the cost. Examples are: heating, ventilation, and air conditioning systems, plumbing, and permanent partitions of the building or structure.

7.A.4 Accounting Policy for Personal Property

Personal property within the Coast Guard shall be accounted for as stated in this section.

7.A.4.a Personal Property - Capitalization

All personal property acquired after 30 September 2003 shall be capitalized when the total cost of the acquisition or improvement meets the threshold amounts shown below. Acquisitions or improvements below these thresholds shall be expensed.

CATEGORY	THRESHOLD
Aircraft	$200,000
Vessels	$200,000
Electronics Systems	$200,000
Internal Use Software	$200,000
All other Electronics (stand-alone and test equipment)	$50,000
Small Arms	$50,000
Vehicles	$50,000
Boats	$50,000
General Purpose Property (GPP)	$50,000
Buoys	$50,000
Repairable Spares (applies only to NESSS, ALMIS and CMPLUS systems)	$0

7.A.4.b Depreciation Lives

1. All capitalized personal property assets (excluding Yard Fund Assets for which separate policy applies) will be depreciated over the useful life of the assets using the straight-line method with no salvage value.

2. For all costs in a project to be capitalized, it must be determined that the Coast Guard is receiving an asset system that will be capitalized and depreciated as a system or that the pieces of the system will be entered separately using an average unit cost and depreciated separately.

3. Average unit cost should generally not be adjusted during the life of the project unless the average unit price changes materially. Changing that price affects the financial records of several prior periods and depreciation expense of the years involved.

4. Aircrafts or vessels that are "out of service" or "in storage" with the intent to someday return the assets to service will continue to be depreciated as normal.

7.A.4.c Service Lives

- Vessels above 65' length – 30 Years
- Standard Boats – 20 Years
- Fixed Wing Aircraft – 20 Years
- Rotary Wing Aircraft – 20 Years
- Electronics Systems – 8 Years
- Non-Standard Boats – 5 Years
- All other personal property – 5 Years

7.A.4.d
Heritage Personal Property Assets

1. Heritage assets shall be identified only in the property tracking system and aggregated for presentation in the Required Supplementary Stewardship Report.

2. Heritage assets shall be measured on the basis of physical units of issue rather than dollars.

3. Heritage assets will be expensed at time of procurement regardless of the amount.

7.A.4.e
Non-AC&I Projects

1. Acquisitions and improvements procured with non-AC&I funds that meet capitalization thresholds will be recorded directly into the designated fixed asset system by the procuring unit if capitalization thresholds are met.

2. Non-AC&I capital asset additions shall be placed in a "hold" status pending receipt by FINCEN of all cost documentation to support capitalization and entry into the designated fixed asset system.

3. The Civil Engineering Unit (CEU) shall enter correcting data into the designated fixed asset system upon a request from FINCEN after the review of cost documentation.

4. For proper tracking of non-AC&I asset procurements, CEU must enter the CGOF document number in the designated fixed asset system.

7.A.4.f
Asset Disposal Policy

PP&E must be removed from general PP&E accounts along with associated accumulated depreciation/amortization when the asset is disposed. If prior to disposal, retirement, or removal from service, any capitalized PP&E no longer provides service in operations, the value of such property along with accumulated depreciation must be removed from the general ledger accounts. PP&E may no longer provide service either because it suffered damage, became obsolete in advance of expectations, or was identified as excess.

7.A.4.f
Asset Disposal Policy
(Continued)

Any difference in the book value of the PP&E and its expected net realizable value must be recognized as a gain or a loss in the period of adjustment. The expected net realizable value must be adjusted at the end of each accounting period and any further adjustments in value recognized as a gain or a loss. However, no additional depreciation/amortization will be taken once such assets are removed from general PP&E in anticipation of disposal, retirement, or removal from service. The NRV, if any, must transfer to an Asset-Pending Disposal account until such time as the asset is disposed.

7.A.4.f.(1)
Asset Disposal Policy – Valuation

a. Valuation of assets that are to be transferred to another federal government agency will be valued at net realizable value, which is generally net book value.

b. Valuation of assets that are to be disposed to an entity outside the federal government agency will be valued at net realizable value, which is generally zero.

c. Valuation of assets that final disposition is unknown will be valued at net realizable value, which is generally net book value.

Impaired Assets

If an impaired asset remains in use, the loss due to impairment is measured as the difference between the book value and either:

a. The cost to acquire an asset that would perform similar remaining functions; or

b. The portion of book value attributable to the remaining functional elements of the asset.

7.A.4.f.1
Asset Disposal Policy – Valuation (Continued)

The loss must be recognized upon impairment and the book value of the asset reduced accordingly. If neither (1) nor (2) can be determined, the book value continues to be amortized over the remaining useful life of the asset. If the impaired asset is to be removed from use, the loss due to impairment is measured as the difference between the book value and the net realizable value (NRV), presumably zero. The NRV, if any, must transfer to an Equipment-Pending Disposal account until such time as the asset is disposed.

Assets In Storage or Out of Service - "In Special Service"

Coast Guard assets are, from time to time, placed in storage or out of service. This category of service implies that the status of the asset is temporary and will return to future service, i.e., there are no future or proposed plans to retire, dispose or decommission the asset. Assets in this category will remain in the general ledger accounts, as well as, continue to be depreciated. Note: Although Coast Guard assets in the " in storage" and/or "out of service", i.e., "in special service" categories are infrequent, inclusion (of those categories) in this policy is to provide guidance as necessary.

7.A.4.g
Valuation Policy - Total Cost

At the completion of a project (when the last asset is delivered), an adjustment to the average unit cost of capitalized asset values will be made based on a full accounting of the project.

If the difference is less than 10% of the value assigned to the last asset, it should be added to or subtracted from the value of the last asset. Differences in excess of 10% may require adjustment to previously delivered assets and depreciation.

The APM and FINCEN will jointly determine the treatment for any costs that have not been billed at the time the last project asset is delivered (e.g., DOD MIPR costs) and make appropriate adjustments on the PMDS and in the project accounting system and designated fixed asset system.

7.A.4.h
Valuation Policy - Average Unit Cost

1. The average unit costing method shall be used for procurement of multiple like assets (i.e., buoy tender, HC-130 engines, DGPS) in a project.

2. The average unit price shall be computed by dividing the total AC&I project cost (direct + allocated indirect project cost) by the initial number of units to be procured.

3. Repairable spares shall be capitalized as part of the asset they support (i.e. Aircraft, vessel, major electronics system). They will be included in the cost of the asset in Oracle and will be tracked in the appropriate supply/logistics system (ALMIS, NESS, CMPLUS, FLS, LIMS).

4. The average unit amount for spares and AC&I labor that comprise average unit cost shall be shown included on the Project Management Data Sheet ("PMDS") and included in the cost of the asset they support.

5. Changes to average unit cost should only be approved, if material, and shall be applied to prospective assets only, if at all possible.

6. Examples of asset systems that might be entered as one system or as individual units using an average unit costing methodology are vessels, aircrafts, GPS, TCAS or FLAR systems.

7.A.4.i
AC&I Pools

1. AC&I billets are divided into cost pools for purposes of spreading labor. This includes a G-A cost pool, a G-S cost pool applicable to all projects other than real property projects and a G-S cost pool applicable to real property projects.

2. Based on annual labor allocation figures developed by CG-84, FINCEN shall record allocated labor to applicable projects in the Oracle Projects accounting system each year.

7.A.4.j Transfers

1. Personal property assets received from other government agencies shall be transferred-in at the existing book value of the transferring agency or estimated fair market value if the book value is not provided. This value shall be increased by transfer costs such as freight and shipping charges.

2. Transfer documents shall be forwarded to FINCEN to document delivery, acceptance and transferred-in cost.

3. Coast Guard units or Headquarters offices responsible for the movement of Coast Guard personal property assets shall copy FINCEN on all OFCO and Ferry Movement messages resulting in a permanent change in aircraft or vessel location.

4. FINCEN shall update the designated fixed asset system to reflect the transfer.

7.A.4.k Government Furnished Property

All government furnished property and government furnished equipment (GFE) shall be accounted for in the designated fixed asset system based on the category of asset, i.e., GPP, electronics, operating materials and supplies ("OM&S"), etc.

7.A.4.l Gift Value

Gifts shall be valued at fair market value through appraisal, but if the owner acknowledges in writing that no appraisal is needed, approximate fair market value shall be established through historical documents.

7.A.5 Asset Systems - Oracle Fixed Assets

The Oracle Fixed Assets system is the official system of record for property existence and valuation.

a. Oracle Projects is the official system for capturing the cost of AC&I construction projects. FINCEN maintains the project accounting records and all project set-ups.

7.A.5
Asset Systems - Oracle Fixed Assets (Continued)

b. Reports available from the system include all detailed transactions recorded to projects since 10/1/98. A conversion line item is included in the detail records to represent any CIP balance brought forward as of 9/30/98.

c. Oracle Projects do not include detailed cost incurred on the project by ICP activities or the Coast Guard Yard. These transactions appear in the designated fixed asset accounting system as a summary figure for ICP transactions as summary charges against Yard Project Orders.

7.A.5.a
Inventory - Capital Assets

1. Property officers, district asset managers, and facility managers shall prepare a year-end certification of capital personal property assets under their control as of 30 September, based on the assets in the Oracle fixed asset module.

2. Activities with capital personal property assets under their control shall conduct a complete physical inventory of all capitalized property in the fourth quarter and provide certification to FINCEN.

3. These year-end capital asset certifications shall be submitted to FINCEN with any errors and corrections by 5 October each year. All discrepancies shall be supported by documentation.

4. The existence of real property assets and CIP projects shall be certified periodically as determined by CG-84.

7.A.6 Documentation Requirements

FINCEN shall maintain sufficient documentation to prove federal ownership and valuation.

At a minimum, documentation shall be maintained to support the following:

a. The United States has legal ownership of the asset or has the legal right to use the asset (i.e., lease) and the Coast Guard has administrative control over such asset.

b. Documentation supporting valuation will be retained, per appropriate directives.

c. Sufficient documentation to support all the material components of the asset's total acquisition cost.

d. Documentation to support the disposal of the asset, including demolitions.

7.A.7 Accounting Policy For Repairable Spare Parts

Repairable spare parts managed at Coast Guard ICPs, ICGS, and Field Units shall be accounted for as stated in this section.

7.A.7.a Legacy Assets (Prior to FY04)

1. Repairable spare parts, regardless of cost and condition, shall be associated to the related ORACLE asset category (e.g. AIRCRAFT-HC130H, VESSELS-WAGB POLAR) they support, and shall be assigned the same economic service life and average date placed in service as that asset category.

2. Repairable spare parts shall be subjected to group depreciation at the applicable asset category level in ORACLE.

7.A.7.b
New Systems or Cutter Classes (FY04 and Beyond)

1. Repairable spare parts, regardless of cost or condition, shall be capitalized as part of the individual asset they support, and shall be depreciated using the same remaining economic service life as that specific asset.

2. As the Coast Guard clears construction in process and records the end item as an asset in the ORACLE fixed asset module, the value of purchased repairable spare parts shall be capitalized and tracked as part of that that particular asset (e.g. Aircraft, Cutter, Small Boat, System).

3. Repairable spare parts at the ICP/ICGS level shall be reported at the class category level, and then averaged among the number of assets in that class.

7.A.7.c
Reporting to Commandant (CG-842)

1. FINCEN shall report the extract file for Aircraft, Vessels, Small Boats and Electronics systems quarterly in accordance with published schedules (ORACLE).

2. ICPs/ICGS shall report the value of depot stored repairable spare parts quarterly in accordance with published schedule (ALMIS, NESSS, LIMS).

3. G-SLP shall report the value of field unit repairable spare parts quarterly in accordance with published schedules (FLS).

4. ICGS shall report the value of field unit repairable spare parts quarterly in accordance with published schedules (LIMS)

7.A.7.d General

1. Supply/Logistics systems shall maintain a link to class via the appropriate end item application. ICP/ICGS supply/logistics systems shall maintain a date placed into service (i.e. item introduction date) so that new acquisitions can be identified and tracked.

2. Weighted average cost and repair expense data shall continue to be collected, maintained, and reported from the supply/logistics system (ALMIS, NESSS, CMPLUS, FLS, LIMS).

3. Repairable item repair expense data shall continue to be collected and maintained in the supply/logistics systems, but shall not affect the asset value in ORACLE.

4. Not ready for use assets that remain in use shall continue to be depreciated over the remaining useful life of the base asset with no additional allowance for loss, or "write down."

5. Physical inventory and logistics policy shall be maintained in the Coast Guard Uniform Supply Operations Manual, COMDTINST M4121.4 (series), and the Supply Policy and Procedures Manual, COMDTINST M4400.19 (series). The Office of Financial Policy and Systems (CG-84) shall provide the Office of Logistics Policy (G-SLP)/ICGS financial policy requirements on an as needed basis.

7.A.7.e Responsibilities - ICPs/ICGS Depots

1. Maintain detailed repairable spares stock records in an audit ready status.

2. Ensure that repairable spares stock records are reconciled and balanced to the Trial Balance for quarterly and annual reporting.

3. Ensure that detailed repairable spares stock items are associated to an end item application and contain an item entry date.

7.A.7.e
Responsibilities - ICPs/ICGS Depots
(Continued)

4. Provide a detail file with associated quarterly CFO reports that identifies on-hand and managed due in repairable stock items. Multiple conditions will be listed individually. The file will contain the following data elements.

   - Federal Stock Class code
   - National Item Identification Number code
   - Noun Name
   - Condition Code
   - Quantity
   - Unit Price
   - Extended Value
   - End Item Application
   - Item Entry/Date Established Date

7.A.7.f
ICGS

1. Provide a certified quarterly summary file from LIMS that identifies the total number and value of repairable items held.

2. Ensure that LIMS field units stock records are maintained in an audit ready status.

7.A.7.g
Commandant G-SLP

1. Develop logistics policy for repairable items maintained at Coast Guard ICPs and field units.

2. Conduct reviews and work closely with ICPs and field units to ensure that their stock records comply with written policies.

3. Provide a certified quarterly summary file from FLS that identifies the total number and value of repairable items held by specific field units.

7.A.7.h
Commandant CG-842

1. Maintain a cross reference of end item application (class) to major/minor category codes. This cross reference file shall be reviewed and updated quarterly.

2. Ensure receipt of data and reports from ARSC, ELC, ICGS, and G-SLP.

3. Analyze repairable files and update major/minor category costs.

4. Maintain detailed, auditable work papers.

5. Prepare and forward repairable spare summary reports to FINCEN quarterly in accordance with published schedules.

7.A.7.i
Area Commander

1. Ensure that field unit's stock records are maintained in an audit ready status.

7.A.7.j
FINCEN

1. Maintain fixed asset module record changes in cost, accumulative depreciation, net book value, and asset service lives.

2. Provide a quarterly certified ORACLE report that identifies all individual platforms under the major categories of aircraft, vessels, small boats and electronics.

3. Provide Commandant (CG-842) a final accounting report of repairable spares at the end of each quarterly reporting cycle.

7.B
Financial Policy For Capitalized Operating Material and Supplies

This policy applies to all OM&S owned by the Coast Guard and under the control of field units, including ICGS managed OM&S.

7.B.1 References

a. Federal Accounting Standards Advisory Board, Statement of Federal Financial Accounting Standards (SFFAS), Number 3.

b. Supply Policy and Procedures Manual (SPPM), COMDTINST M4400.19 (series).

c. USCG Finance Center Standard Operating Procedures, FINCENSTFINST M7000.1

7.B.2 Type of Operating Materials and Supplies

Operating Materials and Supplies (OM&S) are consumable free issue and locally procured items that normally will be used and/or consumed in normal operations. There are three categories of OM&S:

a. Operating Materials and Supplies Held for Use.

b. Operating Materials and Supplies Held for Future Use.

c. Operating Materials and Supplies that are Excess, Obsolete and Unserviceable.

7.B.3 Operating Material and Supplies (OM&S)

a. Held for Predictable Use: OM&S non-allowance quantities that are computed using demand that occurred in two years and held within timeframes established, with predictable usage.

b. Held for Future Use: OM&S allowance quantities are maintenance significant parts that are necessary to maintain equipment in operating condition. Usage of allowance stock is not predictable. Project stock held for a specific period of time for a specific usage.

c. Excess, Obsolete and Unserviceable: OM&S that exceeds normal allowance quantities, or is no longer usable because of technology, law, or operational changes, or which cannot be economically repaired.

7.B.4 Responsibilities -Office of Financial Policy and Systems, Systems Management Division (CG-841)	Establishes, designates and certifies systems for financial tracking of OM&S.
7.B.4.a Office of Financial Policy and Systems, Internal Controls and Asset Management Division (CG-842)	1. Provides financial and audit oversight. 2. Analyzes financial reports and logistics data. 3. Maintains an internal control program. 4. Maintains reporting standards.
7.B.4.b Office of Logistics Directorate, Logistics Policy Division (G-SLP)	1. Ensures logistics policy is established and maintained. 2. Shall monitor and conduct field visits to ensure physical inventories are conducted IAW ref (b). 3. Prepares and submits period-end financial reports.
7.B.4.c ICGS (Deepwater Units)	1. Ensures logistics policy is established and maintained. 2. Shall monitor and conduct field visits to ensure physical inventories are conducted IAW ref (b). 3. Prepares and submits period-end financial reports.
7.B.4.d FINCEN	1. Maintains general ledger balances for field OM&S. 2. Prepares period-end adjustment entries to record OM&S at field units. 3. Ensures annual reconciliation of FLS OM&S records with the general ledger.

7.B.4.e Responsibilities Units CO/OIC ensures

1. Ensures OM&S including repairable spares are secure and under good physical control.
2. Ensures transactions are processed within time standards.
3. Maintains audit ready records and files.
4. Performs physical inventories and completes reporting.
5. Executes FLS extracts timely and correctly.
6. Submits annual reports of OM&S to FINCEN(FF)/Commandant (CG-842).

7.B.4.f Area, District, and MLC Commanders

Ensuring units are in compliance with policy and maintain complete, accurate, audit ready records.

7.B.5 Reporting Operating Materials and Supplies

a. All units regardless of type, shall report the value of OM&S. All OM&S regardless of value, held by the following types of units are subject to financial reporting and will be recorded on the Coast Guard's financial statements. All OM&S, regardless of value, will be subject to audit and review.

1) High Endurance Cutters (WHEC)
2) Medium Endurance Cutters (WMEC)
3) Coastal Buoy Tenders (WLM)
4) Icebreaker Tugs (WTGB)
5) Training Cutters (WIX)
6) Naval Engineering Support Units/Mat Detachment (NESU/MAT)
7) Communications Stations (COMSTA)
8) Air Stations/Hitron (AIRSTA)
9) Loran Stations (LORSTA)
10) Loran Support Unit (LSU)
11) Integrated Support Commands (ISC)
12) Groups/Bases (GRP/BASE)
13) Activities (ACT)

7.B.5
Reporting Operating Materials and Supplies
(Continued)

14) Electronics Support Units/Detachments/Details (ESU/ESD/ESDD)
15) Vessel Tracking Stations (VTS)
16) Maintenance Logistics Commands (MLC)
17) Training Centers (Petaluma/Yorktown)
18) National Motor Lifeboat School (NMLBS)
19) Ice Breakers (WAGB)
20) Seagoing Buoy Tenders (WLB)

b. OM&S carried by field units other than those listed above are subject to financial reporting. Commandant (CG-842) will annually evaluate the composition of Field OM&S to ensure reporting criteria is current and accurate.

c. Yard Fund and Supply Fund material held at any location is not considered OM&S, but rather inventory since it is resold to a customer.

d. OM&S will be valued using a weighted average cost method. Units shall ensure that OM&S items have a unit price established and entered into the inventory record for reporting and accounting purposes. The document number shall also be entered to provide an audit trail for valuation support of OM&S. Units shall ensure that documentation is kept to support valuation for a period of three years (e.g. Purchase Orders, Mistrip DD-1348, Transfer Documents DD-1149, invoices, etc…). If the cost of an item is not known, follow instructions in the Supply Policy and Procedures Manual, COMDTINST M4400.19 (series) to determine a reasonable cost. Documentation must be kept to support these items.

e. Units with OM&S shall execute physical inventories in accordance with the Supply Policy and Procedures Manual COMDTINST M400.19 (series).

f. Reports of Survey shall be prepared and forwarded to the appropriate approving authority as identified in reference #2 of 7.B.1. Reports of survey shall be filed and retained for a period

7.B.5
Reporting Operating Materials and Supplies
(Continued)

of three years from the date of the approval. All documentation to support the Report of Survey shall be forwarded as part of the package.

g. Units shall keep the all issue, receipt and physical inventory documentation for a period of three years.

h. As required by reference #2 of 7.B.1, units shall report the results of inventories by submitting to the CO/OIC a memorandum detailing the results of all physical inventories. Units shall ensure that an FLS TAV extract is executed after each physical inventory. A copy of the physical inventory results memorandum shall be submitted to Commandant (G-SLP) after each inventory

i. Each OM&S item record shall have a unit price established and entered for accounting purposes. No OM&S items with an on-hand quantity greater than zero shall have:

    1) Zero for a unit price.
    2) A null bin location.

j. Unless otherwise directed by Commandant (G-SLP), all units with OM&S shall execute a data extraction via electronic mail at the end of each fiscal quarter as per the Supply Policies and Procedures Manual COMDTINST M440019.19 (series).

k. A year-end certification letter shall be signed by the Commanding Officer/Officer in Charge and forwarded to FINCEN (original), Commandant (G-SLP) (copy), no later than 5 October. The letter shall certify that all physical inventories were completed, TAV extractions were completed, no zero cost items exist, no quantity exists without a bin location, and that the number of OM&S items and the value are certified as correct as of 30 September.

7.C
Financial Policy For OM&S Materials and Supplies

To determine the proper classification and valuation of OM&S in the hands of ICPs.

Applicability - this policy applies to OM&S held at or controlled by ELC and the AR&SC.

7.C.1
References

a. Federal Accounting Standards Advisory Board Statement of Federal Financial Accounting Standards # 3.

b. Coast Guard Uniform Supply Operations Manual (USO), COMDTINST M4121.4 (series).

c. Property Management Manual, COMDTINST M4500.5 (series).

7.C.2
Policy - Consumption Method of Accounting

The consumption method of accounting shall be used. Under this approach, the cost of goods should be removed from OM&S (i.e., the asset account) and reported as an OE in the period issued for consumption/use.

7.C.2.a
ICP Accountability

1. ICPs shall maintain physical and financial accountability of OM&S under their control.

2. ICPs shall record current, accurate, and complete information for all issues, receipts, disposals and other adjustments to OM&S.

7.C.2.b
Physical Inventory

The physical inventory shall include OM&S at remote sites including vendors and other units such as AR&SC, OM&S held at air stations.

7.C.2.c
Written Physical Inventory Plan

ICPs shall develop a written physical inventory plan prior to the start of each fiscal year. Forward copies of the physical inventory plan by September to headquarters program manager G-SEN or G-SEA,

7.C.2.c
Written Physical Inventory Plan
(Continued)

G-SLP, CG-84, and CG-83 and units (e.g., air stations) will be required to assist the ICP with the physical inventory for the upcoming fiscal year. This will ensure the required physical inventories can be coordinated with the DOTIG auditors as appropriate. The plan is to include a summary of the total number of line items (OM&S) scheduled for physical inventory. Items held in more than one location (e.g., air stations and vendors plants) shall be counted on or about the same date so as to determine the total quantity of the item owned by the Coast Guard.

Taking physical inventories is a critical element of controlling ICP OM&S.

7.C.2.d
Physical Inventory Categories

The following types of inventories are conducted to meet internal and external management requirements:

1. Cyclic Inventories;
2. Statistical Sample Inventories;
3. Mandatory Physical Inventories;
4. Controlled Items Inventories;
5. Ad Hoc Inventories.

7.C.2.e
Physical Inventory Procedures

Physical inventories shall be conducted in accordance with the guidance provided in chapter 16, Coast Guard Uniform Supply Operations Manual, COMDTINST M4121.4 (series).

7.C.2.f
Physical Inventory Counts Reconciliation

Physical counts shall be compared with inventory records and differences shall be reconciled. Reconciliation of inventory records and physical counts shall be completed and records adjusted within 45 calendar days with resolution of high value differences within 14 calendar days after the physical count is completed or upon receipt of approval of the survey for losses that must be authorized by the cognizant office at Headquarters. A written report of the physical inventory results shall be prepared. The ICP comptroller shall certify the results of the physical inventory and the commanding officer shall approve the results in writing. The original report shall be retained for possible use in subsequent internal control reviews.

7.C.2.g
Physical Inventory Documentation

Physical inventory documentation (i.e., count sheets etc.) is required. It shall be maintained in accordance with Coast Guard Paperwork Management Manual, COMDTINST M5212.12 (series) and the December 1998 General Records Schedule. The approved physical inventory report shall be included in this documentation.

7.C.2.h
Valuation Method

The weighted average valuation method shall be used to value all OM&S.

7.C.2.i
Value of Reparable Items

The value of reparable items shall be adjusted to reflect the average current repair cost using the allowance method as reflected in FASAB standards to account for actual repair costs.

7.D
Financial Policy For Supply and Yard Fund Inventory

To determine the proper classification and valuation of Supply and Yard Funds.

Applicability - this policy applies to the Supply Fund and the Yard Fund only.

7.D.1
References

a. Statement of Federal Financial Accounting Standards (SFFAS) #3 "Accounting for Inventory and Related Property"

b. Coast Guard Uniform Supply Operations (USO), COMDTINST M4121.4 (series).

c. Property Management Manual, COMDTINST M4500.5 (series).

7.D.2
Inventory/Policy

Tangible personal property held for sale to customers in the normal course of business. Inventory consists of six subcategories:

a. Inventory held for sale.

b. Inventory held because it is not readily available in the local market or because there is more than a remote chance it will eventually be needed (e.g., insurance spares/critical system stock).

7.D.2
Inventory/Policy
(Continued)

c. Inventory stock that exceeds the demand expected in the normal course of operation.

d. Inventory that is no longer usable due to a change in technology, law, or operations.

e. Damaged inventory that cannot be economically repaired.

f. Inventory that can be economically repaired and returned to the inventory held for sale.

g. ICP consist of the following units for the purpose of this inventory policy: ELC, Uniform Distribution Center (UDC), integrated support commands, polar icebreakers and the Coast Guard Yard.

Material located at ICPs for convenience and used by the Coast Guard Yard for reimbursable projects. This material is considered inventory since it will be resold, after fabrication, to a customer.

7.D.3
Inventory Control Points Responsibilities

a. Physical and/or financial accountability of inventory under their control.

b. Accomplishing physical inventories.

c. Reconciling of records to physical counts.

7.D.4
Inventory Other than Fuel at ICP's

a. All subcategories of inventory shall be recorded on the Coast Guard's Balance Sheet in the line item "Inventory".

b. The ICP shall maintain current, accurate, and complete information to determine the cost of goods sold for the year.

c. Taking physical inventories is a critical element of controlling ICP inventory.

7.D.4.a
Controlled Inventory Items -Annual Inventory

Controlled inventory items require an annual complete physical inventory and do not qualify for use of a random statistical sampling approach. Controlled items are designated in the Coast Guard Uniform Supply Operations Manual, COMDTINST M4121.4 (series).

7.D.4.b
Normal Operations

During normal operations, if the following events occur an inventory count of the identified item shall be initiated:

1. total or partial materiel release denials,
2. location survey errors,
3. owner/manager request (special inventory), or
4. selection based on physical inventory prioritization system that considers characteristics such as recorded inventory quantity and dollar value; demand quantity, value, and frequency; proximity of anticipated replenishment action; forecast replenishment quantity and value; and period of time since last inventory.

7.D.4.c
Physical Counts Compared With Inventory Records

Physical counts shall be compared with inventory records and the differences shall be reconciled. Reconciliation of inventory records and physical counts shall be completed in accordance with chapter 16, Coast Guard Uniform Supply Operations Manual, COMDTINST M4121.4 (series). A written report of the physical inventory is required.

7.D.4.d.(1)
Physical Inventory Plan and Documentation

Physical inventory plan and documentation (e.g., count sheets etc.) are required and shall be maintained for three years. The approved physical inventory report shall be included in this documentation.

7.D.4.d.(2)
Inventory Recorded at Historical Cost

Inventory shall be recorded at historical cost using the weighted average valuation method. Documentation to support valuation shall be maintained by the services accounting office.

7.D.4.d.(3)
Value of Reparable Items

The value of reparable items shall be adjusted to reflect the average current repair cost using the allowance method as reflected in FASAB standards to account for actual repair costs.

7.D.4.d.(4)
Average Current Repair Cost

The value of reparable items shall be adjusted to reflect the average current repair cost using the allowance method as reflected in FASAB standards to account for actual repair costs.

7.D.4.d.(5)
Yard Owned Inventory

Yard owned inventory shall be counted by the ICP during physical inventories and the Yard Fiscal Department shall maintain financial and asset accountability.

7.D.4.d.(6)
Inventory Materials

Inventory material in the hands of the end user will be considered OM&S.

7.D.4.d.(7)
Fuel

a. Conduct an annual physical inventory at fiscal year end and report to FINCEN in accordance with FINCEN SOP.

b. Fuel held at ISC Kodiak, Polar Icebreakers, WHEC and WMEC shall be recorded on the Combined Statement of Financial Position in the line item "Inventory." Fuel held by ISC Kodiak will be expensed when sold to the customers.

c. Fuel purchased by the end user, including shore units, for consumption shall be considered consumed and expensed at the time of sale.

d. The energy manager shall maintain oversight of both financial and asset accountability and shall ensure periodic inventories with reconciliation to the financial records are accomplished. At the end of the year, the cost of fuel purchased will be verified by the Energy manager and forwarded to FINCEN for inclusion in the annual financial statements.

e. All inventories shall be valued at weighted average cost and include costs necessary to bring the items to the ICP. All subsequent transportation costs shall be considered a period of expense and not added to the value of the inventory.

7.E Financial Policy for Environmental Liabilities

To establish the financial treatment for environmental liabilities.

Coast Guard maintains an active environmental program, not only identifying, investigating, and cleaning up contamination from hazardous substances and pollutants but also preventing future asset contamination. Statement of Federal Financial Accounting Standards (SFFAS) #5 complements this program by requiring the establishment on the financial statement of an environmental liability for cleanup costs if the liability is probable (greater than 50% likelihood of occurrence) and the amount can be reasonably estimated. Additionally, SFFAS #6 provides guidance on establishing liability for operating asset environmental cleanup, which might not occur until the end of the asset's useful life or disposal.

Applicability applies to cleanup costs from Coast Guard operations known to result in facility contamination from hazardous waste, which the Coast Guard is required by federal, state, and/or local statute and/or regulations to cleanup.

7.E.1 References

a. Statement of Federal Financial Accounting Standards (SFFAS) #5 titled "Accounting for Liabilities of the Federal Government"

b. Statement of Federal Financial Accounting Standards (SFFAS) #6 titled "Accounting for Property, Plant, and Equipment"

c. Chapter 19 of Title 14 United States Code titled "Environmental Compliance and Restoration Program".

7.E.2 Definitions - Cleanup Costs

The cost of removing, containing, and disposing of hazardous waste from property, plant and equipment. Cleanup may include, but is not limited to, decontamination, decommissioning, site restoration, site monitoring, closure, and post-closure costs.

7.E.2.a Hazardous Waste

The solid, liquid, or gaseous waste, or combination of these wastes, which because of its quantity, concentration, or physical, chemical, or infectious characteristics may cause or significantly contribute to an increase in mortality or illness.

7.E.2.b Environmental Cleanup

The EC&R appropriation manager in conjunction with affected program managers shall develop the estimate of outstanding liability associated with environmental cleanup actions.

7.E.3 Policy

At least annually, an estimate will be developed concerning the outstanding liability for cleaning up known estimatible environmental hazards associated with Coast Guard's activities. The liability shall include an estimate for site contamination cleanup and for environmental cleanup related to Coast Guard's operating assets. The former shall be developed when the cleanup requirement becomes known. The latter shall be developed when the associated asset is placed in service. The estimate shall take into consideration:

a. Level of restoration/correction to be performed.

b. Current legal/regulatory environmental requirements.

c. Current technology and

d. Current cost, which is the amount that would be paid if all equipment, facilities and services included in the estimate were acquired during the current period.

Cleanup estimates shall be revised periodically to reflect material changes due to inflation or deflation and changes in regulations, places and/or technology. New cost estimates shall be developed if there is evidence that material changes have occurred; otherwise estimates may be revised through indexing. The effect of estimate changes shall be recognized as expense and the liability adjusted in the period the change occurs.

7.E.3
Policy
(Continued)

Documentation shall be maintained by the appropriation manager, which explains the cleanup plan and the related methodology used in computing the cleanup liability. This information shall be retained for six years after the close of the reported year.

7.F Financial Policy for Accounts Receivable

To establish policies for the financial treatment of accounts receivable. This policy applies to accounts receivable generated by Coast Guard operations, except for non-appropriated fund activities.

7.F.1 References

The financial accounting treatment of accounts receivable contained in the below directives.

a. Statement of Federal Financial Accounting Standards (SFFAS) # 1 "Accounting for Selected Assets and Liabilities" Liabilities" http://www.fasab.gov/pdf/sffas-1pdf

b. SSFFAS #7 "Accounting for Revenue and other Financing Sources" http://www.fasab.gov/pdf/sffas-1pdf

c. OMB Circular No. A-129 "Policies for Federal Credit Programs and Non-Tax Receivables" http://www.whitehouse.gov/omb/circulars/a129.html

d. Debt Collection Act of 1982.

e. Debt Collection Improvement Act (DCIA) of 1996 http://www.fms.treas.gov/debt/dmpolicy.html#leg

f. Improving the Management of Federal Delinquent Debt http://www.fms.treas.gov/debt/writeoff.pdf

g. Treasury Financial Manual, Volume I, Parts 2 & 6 http://www.fms.reas.gov/tfm/index.html

h. Coast Guard Claims and Litigation Manual COMDTINST M5890.9 (series).

7.F.1
References
(Continued)

i. Finance Center Standard Operating Procedures (SOP) Manual, Chapter 9 "Procedures for Receivables, Collections and Lockbox" http://www.fincen.uscg.mil/sop.htm

7.F.2
Definitions - Accounts Receivable

Amounts due from others for goods furnished, services rendered, or charges levied (e.g., reimbursements earned, refund receivables, civil fines, and penalties).

7.F.2.a
Refund Receivables

Refunds represent the pay back of overpayments or amounts paid in error. Examples of these types of transactions are duplicate payments, transportation ticket refunds, erroneous payments, etc. Refund receivables from non-federal entities are not available for obligation until the refund is collected.

7.F.2.b
Entity Receivables

Amounts due representing the value of commodities, work or services furnished to another appropriation, individual or firm which by law may be credited to the appropriation which financed such items or activities. Examples of these types of transactions are oil spill cleanup costs billed by the National Pollution Funds Center (NPFC) for the OSLTF and spare parts purchased from the Supply Fund.

7.F.2.c
Non-Entity Receivables

Amounts that the entity collects on behalf of the United States government or other entities, and the entity is not authorized to spend (e.g., fines for boating safety violations).

7.F.2.d
Unbilled Receivables

Expenditures that have been incurred, representing a valid claim but have not been billed (e.g., NPFC expenditures accruing on a case with a **known** responsible party (RP) to bill; however, the claim is not ready to be billed).

7.F.2.e
Accounts Receivable Manager

A Headquarters office chief, Headquarters unit commanding officer or other official responsible for management of major accounts receivable program in accordance with applicable regulations.

7.F.3
Office of Financial Systems (CG-84)

Develops or participates in the development and ultimate approval of accounts receivable policy and certification of related financial systems. Assures systems comply with applicable external requirements including effective internal controls.

7.F.3.a
Responsibilities - Office of Financial Management (CG-83)

Develops and monitors programs for ensuring effective implementation/execution of Coast Guard's accounts receivable policy including adequacy of prevailing internal controls.

7.F.3.b
Office of Budget (CG-83)

Monitors receivables established under the Reimbursable and Refund Programs as per paragraph 5.I. of the Financial Resource Management Manual (FRMM).

7.F.3.c
Chief, Office of Claims and Litigation (G-LCL)

Develops Coast Guard claims settlement programs.

7.F.3.d
Coast Guard FINCEN

1. Maintains general ledger balances for accounts receivable in the core accounting system.
2. Requires reconciliation of subsidiary records to controlling general ledger accounts.
3. Consolidates receivables Coast Guard wide.
4. Operates and maintains the Oracle accounts receivable system.
5. Maintains receivables/collections for assigned programs.
6. Reports account receivables for the Coast Guard to regulatory activities.
7. Establishes SOPs to carryout the above functions.

7.F.3.e
Accounts Receivable Manager

1. Exercises effective stewardship of accounts receivable.

2. Ensures personnel performing accounts receivable functions have adequate training.

3. Complies with the receivable policies in the FRMM, FINCEN SOPs and other applicable guidance.
4. Establishes and implements SOPs in support of prevailing accounts receivable policies.

5. Implements and maintains effective internal controls.

6. Performs accounting, billing, and collection functions where applicable.

7.F.3.f
Major Accounts Receivable Manager Assignments

Related Activity Manager	Accounts Receivable
Oil Clean Up/Damage Claims	NPFC
Aircraft Repair & Supply Center (ARSC)	ARSC
Engineering Logistics Center (ELC)	Yard
Yard	Yard
Military Pay "out-of-service debt" and miscellaneous offset debt such as travel or excess HHG shipments	PSC

7.F.3.f
Major Accounts Receivable Manager Assignments
(Continued)

Related Activity Manager	Accounts Receivable
Medical Claims	COMDT (G-WRP)
Dining Facilities	COMDT (G-WKW)
Uniform Clothing	COMDT (G-WPM)
FEMA reimbursements	COMDT CG-83
Civil Fines/Penalties/EPA Consent Decrees	FINCEN
All Other Claims Not Assigned	FINCEN

7.F.4
Policy –Receivable Recognition

Accounts receivable shall be recognized and recorded in the accounting period when claims arise.

The billing office shall maintain adequate supporting documentation for the receivables.

7.F.4.a
Policy - Unbilled Receivables

1. This category primarily applies to NPFC it also includes FINCEN unbilled receivables under the Merchant Vessel Inspection (MVI) program and the reimbursable program.

2. The revenue standard, SFFAS#7 requires that revenue be recorded when it is earned vs. collected. Therefore, unbilled accounts receivable shall be accrued in the accounting period when claims to cash arise. The accounts receivable manager shall prepare documentation to support recording an unbilled receivable. All unbilled receivables shall be tracked, aged (but reflected as 'Not Delinquent'), and reported to FINCEN in accordance with FINCEN SOP.

7.F.4.b Oil Pollution Act

The Oil Pollution Act of 1990 (OPA 90) establishes general liability limits for removal costs and damages resulting from vessel and facility oil spills. Limits do not apply in exceptional circumstances, which may be determined only through settlement or litigation with the liable responsible party (RP). The amount to be recorded should cover removal costs and damage payments incurred up to the general limit of liability for the particular spill. Any removal costs or damage payments in excess of the general limit are not considered due from the RP (although billed by the NPFC it is not booked as a receivable) until there is a settlement in which the RP agrees to pay in excess of the limit, or a final judgment by a court that orders the RP to pay in excess of the limit.

To adequately comply with Title 2 (Appendix I, C50), any receivable for removal costs or damage payments in excess of the limit of liability should not be recorded in the accounting records, but rather disclosed as a contingent gain in the footnotes to the financial statements. If settlement or court action subsequently provides for RP payment in excess of the limit of liability, the additional amount should be recognized as both revenue and as a receivable at that time. All concerns about collectability of the receivables should be reflected by means of appropriate entries to the Allowance for Loss on Accounts Receivable general ledger account.

7.F.4.c Billings

1. Billings including partial billings shall be made in a timely manner in accordance with prevailing regulations. Non-federal billings shall include applicable interest, penalty and administrative charges. OSLTF billings to state and non-federal entities shall include applicable interest only.

2. Intergovernmental Payment and Collection (IPAC) should bill OGA. DOD is billed by both IPAC and SF1080s. IPAC is always the preferred billing method.

7.F.4.c
Billings
(Continued)

3. Provisions of section 5.I. "Reimbursable and Refund Programs " of the FRMM apply.

4. Billings shall be accomplished using the approved accounts receivable system (i.e., Oracle) unless waived by CG-84.

7.F.4.d
Collection Process

The accounts receivable manager to assure maximum collection effectiveness will pursue vigorous follow-up action. This action will include:

1. Adhering to Coast Guard Claims and Litigation Manual, COMDTINST M5890.9 (series).

2. Collecting all non-federal debts in a timely manner.

3. Aging of billed receivables to facilitate concentration of collection efforts.

4. Referring all non-federal debts more than 180 days delinquent to Treasury, Financial Management Service (FMS) for offset and cross servicing, according to the 1996 Debt Collection Improvement Act and related FMS guidance. Transmit all information to the Treasury for debts referred, following the latest regulations in the Treasury Financial Manual and supplements. Copies of referrals will be sent to FINCEN.

5. Referring all federal debts more than 180 days old to FINCEN. FINCEN shall serve as the Coast Guard central point of contact for resolving amounts owed the Coast Guard from other federal agencies. However, cases involving amounts owed the OSLTF will be resolved by the NPFC.

6. Reviewing delinquent debts continuously to identify those items that should be written-off and closed out.

7.F.4.d
Collection Process
(Continued)

7. Reconciling subsidiary receivable records at least quarterly with the related general ledger.

8. Processing remittances in accordance with applicable regulations. Timely entry shall be made to accounts receivable.

7.F.4.e
Uncollectible Accounts Receivable

Uncollectible Accounts Receivable Recognition in Financial Accounting Records:

1. Losses on receivables should be recognized by the accounts receivable managers when it is more likely than not that the receivables will not be totally collected. When this situation exists, the accounts receivable managers shall establish an appropriate allowance for loss on accounts receivable.

2. Write-offs and closeout procedures shall be in accordance with Coast Guard Claims and Litigation Manual, COMDTINST M5890.9 (series), and Section V of OMB Circular A-129 (Revised), Ref. C.

7.F.4.f
Reporting

Accounts receivable managers maintaining general ledger accounts shall account for and report separately:

1. Intra-governmental (federal) and non-federal entities accounts receivable.

2. Billed and unbilled receivables.

3. This information shall be provided timely to FINCEN in accordance with FINCEN SOP.

4. FINCEN reports all Coast Guard accounts receivable for internal management purposes in compliance with external regulatory requirements.

7.G Accounting For Coast Guard Internal Use Software

To establish the accounting policy for internal use software. This does not include software procured with non-appropriated funds. Accounting policies for non-appropriated fund procured software is the responsibility of G-WPX.

Applicability - this guidance implements the requirements of the Statement of Federal Financial Accounting Standards (SFFAS) Number 10, Accounting for Internal Use Software, which requires federal agencies to capitalize the cost of software when such software meets the capitalization criteria as defined below. The standard is effective 1 October 2000, and is applicable to all internal use software either developed by federal entities or procured from a contractor. Costs incurred prior to the effective date will not be capitalized.

7.G.1 Definitions-Capital Software Project

A project that meets the requirement for capitalization, regardless of funding source, as follows:

a. An internal use software project which meets or exceeds a cost of $200,000.

b. An increase in the capacity and/or capability of an existing software improvement/enhancement) of $200,000 or more.

7.G.1.a Software Project Manager

Person responsible for implementation of a capital software project.

7.G.1.b Software Program Manager

Person responsible for management and administration of capital software project, which has been deployed.

7.G.1.c Enhancements

Capitalizable enhancements are defined as significant changes to software that meet the capitalization threshold and add capability or functionality.

7.G.1.d Internal Use Software

Software that is purchased commercially off-the-shelf, internally developed, or contractor-developed solely to meet Coast Guard's internal or operational needs.

7.G.1.e Commercial Off-the-Shelf (COTS) Software

COTS software refers to software that is purchased from a vendor and is ready for use with little or no change.

7.G.1.f Internally Developed Software

Software that Coast Guard employees actively developed, including new software and existing or purchased software that has been substantially modified with or without the assistance of contractors. This does not include software proposed with NAF. Accounting policies for NAF proposed software is the responsibility of G-WPX.

7.G.1.g Contractor-Developed Software

Software that the Coast Guard employed a contractor to design, program, install, and implement, including new software and existing or purchased software that has been substantially modified without substantive employee involvement beyond contract monitoring.

7.G.1.h Project Management Data Sheet (PMDS)

A summary of total software project capital and non-capital expenditures.

7.G.2 Responsibilities - Office of Financial Systems (CG-84)

Develops and promulgates policy regarding accounting for costs associated with Coast Guard internal use software.

7.G.2.a Responsibilities Office of Financial Management (CG-83)

Provides subsequent oversight to field units in order to ensure adherence to the software capitalization policy.

7.G.2.b FINCEN

1. Maintains general ledger balances and supporting documentation for amortization of internal use software.

2. Prepares year-end and other applicable adjusting journal entries to trace the value of internal use software.

7.G.2.b
FINCEN (Continued)

3. Takes the lead in ensuring annual reconciliation of subsidiary records to the accounting system. This includes preparing a list of reconciling items for transmittal to the HQ program manager to assist in reconciling subsidiary records to the accounting system.

4. Ensures completed capital software projects are removed from the work in progress account and transferred to the appropriate capital asset account. This transaction is based upon information supplied by the software project manager.

5. Ensures internal use software assets meeting capitalization requirements are accurately recorded in the correct Property, Plant and Equipment (PP&E) accounts.

6. Upon receipt of signed disposal documents, make an appropriate accounting entry to reduce value of impaired capitalized software.

7. Establishes procedures, including data collection requirements, applicable Coast Guard wide to carry out the requirements of this policy.

7.G.2.c
Office of Computer Systems (CG-63)

Requires that all CG-63 approved internal use software projects with a software budget of $200,000 or greater are reported to FINCEN annually by the software project manager.

7.G.2.d
MLC Commanders, Headquarters Program Mangers, and Commanding Officers of Headquarters Units

1. Assigns a software project manger for all internal use software projects and a software program manager for all completed software projects.

2. Ensures software project and program managers comply with these requirements.

7.G.2.e Software Project Manager

1. Maintains financial accountability for software projects.

2. Fills out a Software PMDS form and submits it to FINCEN.

3. Submits revised Software PMDS form to FINCEN reflecting actual costs, for all completed projects.

4. Ensures the proper accounting line is entered on all procurement documents and into the unit's appropriate financial system. This must include correct program elements for projects if applicable, cost center of benefiting unit, and correct object class code for capitalization, where appropriate.

5. Requires the establishment of a unique identifier for each internal use software capital project in the financial information system. FINCEN will provide guidance.

6. Requires the timely, complete, and accurate reporting of all completed projects thereby enabling FINCEN to properly capitalize the software project.

7. For internally developed software, submits cost data on Coast Guard resources consumed, particularly programmer and system analyst using Standard Personnel Cost (SPC).

8. Records in FPD timely, complete and accurate transactions for all captializable internal use software projects in accordance with established policy.

9. Maintains accurate project accounts, notifies FINCEN when an asset has been accepted for multiple asset delivery projects and when a project is completed.

10. The above requirements shall be met in accordance with the procedures established by FINCEN.

7.G.2.f Software Management Program

1. Establishes baseline inventories of internal use software and maintains inventory records on an ongoing basis in their areas of responsibility.

2. Reconciles, on an annual basis, changes in internal use software inventory in the Coast Guard designated fixed asset subsidiary system.

3. Requires timely notification to FINCEN regarding internal use software impairment or disposal.

7.G.2.g Capitalization Threshold

Capitalize internal use software with a service life of two years or more and which cost $200,000 or more to acquire, develop, set-up, implement, and/or enhance.

7.G.2.h Bulk Purchases

A bulk purchase of software is the single purchase of like items of software in a lot (e.g., multiple copies of Windows 2000, MS Office2000). Bulk purchases of internal use software and modules/components of a total software system that each individually meet the capitalization threshold shall be capitalized and systematically amortized over the estimated useful life of the software or 36 months whichever is less. The 36-month period should be based on the release date of the product rather than the purchase or acquisition date. If the per item cost of a bulk purchase does not meet the capitalization threshold, it should be expensed in the period acquired. Bulk purchases held in the Supply Fund shall be treated as inventory until sold (e.g. Oracle Fixed Assets, Entrust Digital Signature).

7.G.2.i Distinguishing Capital from Operating Expenditures

Table 1 contains the phases of a software project and the appropriate accounting treatments for the costs incurred at each phase.

Phase of Software Task/Project	Accounting Treatment
Preliminary Design Conceptual formulation of alternatives Evaluation and testing of alternatives. Determination of existence of needed technology. Final selection and project Approval.	Expenses

Phase of Software Task/Project	Accounting Treatment
Software Development/Set-Up Coding/Set-Up Documentation Acceptance/Testing/Installation/ Implementation	Capitalize
Post Implementation/Operational Application Maintenance Enhancements Impairment Retirement	 Expense See 7-7c(4) Reduce Value Remove Asset

Table 1.

NOTE: In accordance with SFFAS, No. 10, training and data conversion expenditures shall be expensed.

7.G.3 Specific Capitalization Guidance

The following costs related to the purchase, development, or modification of internal use software shall be initially capitalized in Oracle Projects, if the costs meet/exceed the $200,000 capitalization cost threshold and the software is expected to have a service life of two years or more:

Sources of Internal Use Software:

a. Internally Developed Software

1. Capitalized cost shall include the full cost (direct and indirect cost) incurred by the Coast Guard during the software development stage. Such cost shall be limited to costs incurred after:

   (a) Management authorizes and commits to a computer software product or project and believes that it is more likely than not that the project will be completed and the software will be used to perform the intended function with an estimated service life of two or more years and;

   (b) The completion of conceptual formulation, design, and testing of possible software project alternatives (the preliminary design stage).

2. The personnel and related cost of Coast Guard resources expended during the software development or customization stage shall be capitalized. To facilitate this process, the personnel hours for programmers and system analysts shall be charged at the prevailing SPC Rate and reported in March and September to FINCEN.

7.G.3.a Contractor-Developed Software

Capitalized costs shall include the amount paid to a contractor to design, program, install, and implement the software. In addition, material internal costs incurred by the Coast Guard to implement the contractor-developed software and otherwise make it ready for use shall be capitalized.

7.G.3.b Cost Incurred

Capitalized costs shall include the amount paid to the vendor for the software license. In addition, material internal costs incurred by the Coast Guard including contractor cost to adjust and implement the software and otherwise make it ready for use shall be capitalized.

7.G.3.c Amortization

Total capitalized cost for a software project shall be amortized over a three-year period. However, where the project contains independent/stand-alone modules or components, amortization shall begin when that module or component has been successfully tested and implemented. If the use of a module is dependent on completion of another module (s), the amortization of that module shall begin when both that module and the other module (s) have successfully completed testing/implementation.

7.G.3.d Enhancements

1. The acquisition cost of significant enhancements (added capability/functionality) to existing internal use software, which meet the capitalization threshold, shall be capitalized.

2. Enhancements normally require new software specification and may require a change of all or part of the existing software specifications as well. The cost of minor enhancements (not meeting the capitalization threshold) resulting from ongoing systems maintenance shall be expensed in the period incurred. For example, upgrading to a new operating system (e.g. Windows 2000) purchased in bulk. Also, the purchase of enhanced versions of software for a nominal charge shall be expensed in the period purchased. Costs incurred solely to repair a design flaw or to perform upgrades that may extend the useful life of the software without adding capabilities/functionality shall be expensed.

7.G.3.e
Integrated Software

Computer software that is integrated into and necessary to operate PP&E, rather than perform a stand-alone application. The software is considered part of the PP&E. Its cost, shall be recorded within the PP&E accountable system and be amortized accordingly (e.g. software for Vessel Traffic System).

7.G.3.f
Cutoff for Capitalization

Excluding capitalizable enhancements, cost incurred after final software acceptance testing and successful implementation shall be expensed. For projects involving multiple site installation, the costs capitalized for each site shall accrue only until testing/implementation is completed.

7.H
Financial Policy for Deferred Maintenance

Deferred maintenance is defined in the Federal Accounting Standards Advisory Board's Statement of Federal Financial Accounting Standards No. 6 as maintenance that was not performed when it should have been or was scheduled to be and which, therefore, is put off or delayed until a future period. It includes preventative maintenance, normal repairs, replacement of parts and structural components, and other activities needed to preserve the asset so that it continues to provide acceptable services and achieves its expected life. Maintenance excludes activities aimed at expanding the capacity of an asset or otherwise upgrading it to serve needs different from, or significantly greater than, those originally intended.

The Coast Guard has chosen to report the value of maintenance necessary to restore all four major asset categories to "excellent" condition. The four major asset categories are:

1. Aviation Depot-Level (AFC-41)
2. Electronics Depot- Level (AFC-42)
3. Shore Facility Depot-Level (AFC-43)
4. Naval Depot-Level (AFC-45).

Furthermore, the Coast Guard includes only maintenance items in these categories that are deferred due to funding constraints - financially slipped deferred maintenance. This provides the best test to ensure that the Coast Guard is reporting a realistic measure of actual deferred maintenance at the end of the fiscal year.

7.H Financial Policy for Deferred Maintenance (Continued)

The presentation of the dollar value of Coast Guard deferred maintenance as required in the supplemental information, in the annual financial statements enables management and oversight authorities to measure the Coast Guard's stewardship of its assets. It also allows for comparison of the dollar amount of deferred maintenance for any given year against the funding levels for that particular year.

7.H.1 References

a. Statement of Federal Financial Accounting Standards (SFFAS) #6 "Accounting for Property, Plant and Equipment"

b. Statement of Federal Financial Accounting Standards (SFFAS) #8 " Supplementary Stewardship Reporting

c. Statement of Federal Financial Accounting Standards (SFFAS) #14 "Amendments to Deferred Maintenance Reporting"

7.H.2 Deferred Maintenance Reporting Responsibilities

The Office of Systems Funds Management (G-SRM) and CG-6 Resource Management Staff (CG-6R) are responsible for the following:

a. Gathers deferred maintenance information as of the last day of the fiscal year, ensuring methodology is followed, and resolving discrepancies.

b. Forwards deferred maintenance information to CG-84 to meet deadline requirements.

The Office of Financial Systems (CG-84) is responsible for the following:

a. Develops methodology, maintains oversight, and conducts analysis for Coast Guard deferred maintenance reporting.

b. Coordinates with the Office of Systems Funds Management (G-SRM) and CG-6 Resource Management Staff (CG-6R) for the proper gathering of deferred maintenance data.

7.H.2
Deferred Maintenance Reporting Responsibilities
(Continued)

c. Ensures programmatic concurrence from the Office of Programs, G-CPA and reports deferred maintenance required supplementary information to the Finance Center for inclusion in the annual consolidated financial statements.

7.H.3
Methodology for Aviation (AFC-41) Depot Level Deferred Maintenance

The total amount of aviation (AFC-41) depot level deferred maintenance is the sum of (a) financially slipped overhauls, (b) financially slipped emergency repairs, (c) financially slipped inventory reorders, (d) financially slipped inventory repairs, (e) financially slipped depot level projects, and (f) financially slipped mandated repairs, estimated as follows:

a. **AFC-41 Financially Slipped Overhauls -** The value of routine aircraft programmed depot-level maintenance (PDM) overhauls (scheduled in accordance with the Aviation Computerized Maintenance System (ACMS)) that have not been funded as of the last day of the fiscal year. This value will be equal to the portion of each aircraft PDM overhaul planned to be performed this fiscal year and not performed, based upon an average daily cost of the total aircraft PDM overhaul. The value of routine aircraft PDM overhauls shall be based upon labor and material cost worksheets, current comparable contract prices or supported by other professional costing methods.

b. **AFC-41 Financially Slipped Emergency Repairs -** The value of emergency aircraft depot-level work that is needed and not funded as of the last day of the fiscal year. An emergency aircraft depot-level overhaul is an un-programmed maintenance event that is established through an aircraft mishap or a depot-level maintenance request for technical assistance from a field-level unit. The value of these repairs will be estimated using labor and material cost worksheets, current comparable contract prices or supported by other professional costing methods.

7.H.3 Methodology for Aviation (AFC-41) Depot Level Deferred Maintenance
(Continued)

c. **AFC-41 Financially Slipped Inventory Reorders -** The value of programmed inventory reorders that are needed, but have not been issued as of the last day of the fiscal year. Inventory reorders are needed when an inventory item falls below the programmed reorder point. The value of these orders will be estimated using the current cost of reordering the economic order quantity of the item.

d. **AFC-41 Financially Slipped Inventory Repairs -** The value of repairs that are needed to restore a sufficient number of broken or worn repairable inventory items to bring repairable inventory to the programmed stock level, which have not been funded for repair as of the last day of the fiscal year. The value of these repairs shall be determined using current comparable costs.

e. **AFC-41 Financially Slipped Depot Level Projects -** The value of depot-level maintenance projects in the Aeronautical Engineering Planned Obligation Program (POP) that are required to maintain serviceability in accordance with Coast Guard regulations and were not funded as of the last day of the fiscal year. This explicitly excludes projects that are material enhancements that extend the capacity, capability or useful life of the aircraft. The value of these repairs will be estimated using labor and material cost worksheets, current comparable contract prices or supported by other professional costing methods.

f. **AFC-41 Financially Slipped Mandated Repairs** - The value of aircraft maintenance that was required by an Aircraft Mishap Board, federal legislation, or federal executive agency that has not been funded as of the last day of the fiscal year. The value of this aircraft maintenance shall be based upon labor and material cost worksheets, current comparable contract prices or supported by other professional costing methods.

7.H.4 Methodology for Electronics (AFC-42) Depot Level Deferred Maintenance

The total amount of electronics (AFC-42) depot level deferred maintenance is the sum (a) financially slipped replacement and replenishment projects, (b) financially slipped inventory reorders, (c) financially slipped inventory repairs, and (d) financially slipped overhauls, estimated as follows:

a. **AFC-42 Financially Slipped Replacement and Replenishment Projects -** The acquisition value of the replacement and replenishment program projects that have been approved and not funded. This excludes material enhancements that extend the capacity, capability or useful life. The estimated deferred maintenance shall be the value of the government estimate for the work.

b. **AFC-42 Financially Slipped Inventory Reorders -** The value of programmed inventory reorders that are needed, but have not been issued as of the last day of the fiscal year. Inventory reorders are needed when an inventory item falls below the programmed reorder point. The value of these repairs will be estimated by using the current cost of reordering the will be estimated by using the current cost of reordering the economic order quantity of the item.

c. **AFC-42 Financially Slipped Inventory Repairs -** The value of repairs that are needed to restore a sufficient number of broken or worn repairable inventory items to bring repairable inventory to the programmed stock level, which have not been funded for repair as of the last day of the fiscal year. The value of these repairs will be estimated by using the best available current comparable costs.

7.H.4 Methodology for Electronics (AFC-42) Depot Level Deferred Maintenance (Continued)

d. **AFC-42 Financially Slipped Overhauls -** The value of all programmed systems overhauls (such as Quality Support Reviews, Electronic Support Reviews, ship dockside and shipyard availabilities and grooms (electronic systems performance reviews)) per the AFC-42 CORE Support Functions Plan (updated annually), which were not funded as of the last day of the fiscal year. The estimated deferred maintenance shall be the value of the government estimate for the work.

7.H.5 Methodology for Shore Facility (AFC-43) Depot Level Deferred Maintenance

The total amount of shore facility (AFC-43) depot level deferred maintenance will be estimated as follows:

a. **Value of Depot Level Shore Facility Maintenance Deficiencies -** The value of depot level shore facility maintenance deficiencies that are documented as projects in accordance with the Civil Engineering Manual, COMDTINST 11000.11 (series), which are not funded as of the last day of the fiscal year and are:

   1. Rebuild projects on shore facility assets less than 35 years old, **and**

   2. Maintenance projects on all shore facility assets.

b. **Criteria for Deficiencies** - Each deficiency must represent a functional failure, failure to meet the manufacturers performance specifications, or be a near functional failure as supported by a condition assessment conducted by a professional civil engineer or the unit engineer. The cost figure for each project greater than $175,000 must be supported by either a Means-Cost Construction worksheet, Whitestone cost estimate, a current comparable contract cost or other cost estimate accepted cost estimate accepted by professional standards. No demolition and improvement components will be considered as deferred maintenance.

7.H.5 Methodology for Shore Facility (AFC-43) Depot Level Deferred Maintenance
(Continued)

c. Categories for Deferred Maintenance for Facilities - Facility deferred maintenance should be divided into the following two categories:

1. Category (a) deferred maintenance for buildings and structures for Coast Guard operating units at Air Stations, Air Facilities, ATON Teams, Groups (includes Group-Air Stations and Group-Marine Safety Offices), Activities, Marine Safety Offices, Vessel Traffic Services (VTS), LORAN stations, and Communication Stations; and

2. Category (b) deferred maintenance for all other buildings and structures.

7.H.6 Methodology for Naval (AFC-45) Depot Level Deferred Maintenance

The total amount of naval (AFC-45) depot level deferred maintenance will be estimated as the sum of (a) financially slipped availabilities, (b) financially slipped emergency repairs, (c) financially slipped inventory reorders, (d) financially slipped inventory repairs, and (e) financially slipped depot level projects, estimated as follows.

a. **Financially Slipped Availabilities -** The value of routine programmed shipyard or dockside availabilities (as defined in the Naval Engineering Manual and MLC five-year plans), which are not funded as of the last day of the fiscal year. The value of these financially slipped availabilities shall be estimated as follows:

1. **When the full contract specifications have been written**, estimated deferred maintenance shall be the value of the government estimate for the work.

2. **When the full contract specifications have not been written**, estimated deferred maintenance shall be:

7.H.6
Methodology for Naval (AFC-45) Depot Level Deferred Maintenance
(Continued)

3. The average recent cost of base contract work for similar vessels; and

4. The average cost of contract work for items above and beyond the base contract items. Ideally, this average will be derived from at least two similar contracts in the current year, but if necessary current year and previous year contracts may be used to develop a more representative average.

b. **Financially Slipped Emergency Repairs -** The value of emergency shipyard or dockside work that is needed and is not funded as of the last day of the fiscal year. An emergency shipyard or dockside availability is a maintenance event that was not programmed but which arose from an event reported in a category three or category four equipment casualty report. The value of these repairs will be estimated using labor and material cost worksheets, current comparable contract prices or supported by other professional costing methods.

c. **Financially Slipped Inventory Reorders -** The value of programmed inventory reorders that are needed, but have not been issued as of the last day of the fiscal year. Inventory reorders are needed when an inventory item falls below the programmed reorder point. The value of these orders will be estimated using the current cost of reordering the economic order quantity of the item.

d. **Financially Slipped Inventory Repairs -** The value of repairs that are needed to restore a sufficient number of broken or worn repairable inventory items to bring repairable inventory to the programmed stock level, but have not been funded for repair as of the last day of the fiscal year. The value of these repairs will be estimated by using the best available current comparable costs.

7.H.6
Methodology for Naval (AFC-45) Depot Level Deferred Maintenance
(Continued)

e. **Financially Slipped Depot Level Projects -** The value of depot level maintenance projects in the Naval Engineering Planned Obligation Program (POP) that are required to maintain serviceability in accordance with Naval Engineering Manual, M9000.6E (series), but were not funded as of the last day of the fiscal year. This explicitly excludes projects that are material enhancements that extend the capacity, capability, or useful life of the vessel. The value of these repairs will be estimated using labor and material cost worksheets, current comparable contract prices or supported by other professional costing methods.

8.A Introduction - Purpose

This chapter describes policies and responsibilities for the design, integration, use, maintenance, training and security of Coast Guard financial and mixed systems.

This chapter applies to all Coast Guard units and staff elements.

8.A.1 Background - External Requirements

The executive and legislative branches have led a major movement toward improving performance, accountability, and financial management with federal agencies. These legislative efforts include the Federal Financial Management Improvement Act (FFMIA) of 1996, The Chief Financial Officer's (CFO) Act of 1990, the Government Performance and Results Act (GPRA) of 1993, and the Information Technology Management Reform Act (ITMRA) of 1996 (now known as the Clinger- Cohen Act). This legislation, along with various directives and guidance issued by the OMB, Federal Accounting Standards Advisory Board (FASAB), and Joint Financial Management Improvement Program (JFMIP), establishes a comprehensive framework for Resource, Financial and Asset Management (RFAM), plus information and performance management guidelines within which government agencies must operate. Enclosure (8-1) provides a summary of key legislation and regulations. Key elements relevant to this chapter are the requirement to comply with various standards when implementing financial and mixed systems and the authority of the CFO to establish the financial and mixed systems used by an agency.

8.A.1.a Coast Guard and Financial and Mixed Systems

In 1997, the Director of Finance and Procurement and Internal Security/Chief Financial Officer, the Director of Information and Technology/Chief Information Officer and the Assistant Commandant for Acquisitions chartered a task group to study Resource, Financial and Asset Management (RFAM) systems (i.e. financial and mixed systems) within the Coast Guard. This cross-functional RFAM Task Group studied RFAM requirements and systems and presented their findings and recommendations in the May 1999 document RFAM. In their report, the RFAM Task Group developed recommended concepts, methodologies and a plan to integrate/improve Coast Guard resources, financial and asset management systems that would facilitate accountability and management as well as comply with the CFO Act, GPRA, and the Clinger Cohen Act. Many of the recommendations contained in the RFAM report have been incorporated in the policies outlined in this chapter.

8.A.1.b Workload Reduction

Unapproved development of financial and mixed systems places an unacceptable burden on Coast Guard personnel. With a computer on every desk, many people often fall into the trap of trying to develop their own system to solve/automate a unique business process ignoring the benefits that accrue from the integration of common business processes across organizational units. These efforts usually start off small but frequently spin out of control with the potential to waste thousands of dollars and hundreds of staff hours on efforts that ultimately must be abandoned. Instead, people that see an opportunity to automate or otherwise improve a process are more productive when they consult with the financial and procurement functional area and systems experts within the Finance and Procurement and Internal Security Directorate at Headquarters and discuss their idea for a system. Efforts then can be channeled to ensure requirements are met quickly and in a cost-effective manner.

8.B Responsibilities-Assistant Commandant For Planning, Resources, and Procurement (CG-8)

1. Establishes Coast Guard Finance and Procurement and Internal Security system standards.

2. As head of the contracting activity, approves all procurement management policies and procurement management systems and requirements.

3. Approves financial and mixed systems and requirements.

4. Approves all energy management systems and requirements.

5. Establishes and maintains the Finance and Procurement and Internal Security Directorate web site.

8.B.1 Office of Financial Policy and Systems (CG-84)

a. Evaluates and meets the CG-8 and Internal Security system needs of program managers throughout the Coast Guard in a timely manner using best business practices.

b. Develops, publishes, and monitors compliance with standards and requirements for the transmission of financial data. Through these actions, take appropriate action to ensure the on-going business needs of the Coast Guard are met in an efficient and effective manner.

c. Reviews and where appropriate, recommends approval to the CG-8, Finance and Procurement systems (includes

8.B.1
Office of Financial Policy and Systems (CG-84) (Continued)

financial and mixed systems) for use in the Coast Guard.

d. Provides security certification/accreditation status of all systems defined in subparagraphs B.b, B.c, and B.d to Chief, Office of Information Management.

e. Ensures Financial and Procurement systems are in compliance with the Coast Guard IT architecture.

f. Maintains program management responsibility for the support of Finance and Procurement systems as designated including (FPD).

g. Determines initial Finance and Procurement system site certification requirements (e.g., FPD) for newly established operating facilities and final finance records disposition for decommissioned or disestablished Operating Facility Change Orders (OFCO's).

h. Reviews and approves annual Statements of Work (SOW) for enhancements/revisions and coordinate development efforts for Finance and Procurement systems including FPD.

i. Ensures internal control systems risk assessments are conducted in accordance with applicable directives, e.g. Management Accountability and Control, COMDTINST M5700.9 (series).

j. Directs the maintenance of the Procurement Management Data Interchange Standard (PMDIS) in conjunction with other directorates and commands.

k. Ensures human factors engineering and accessibility standards are established for Finance and Procurement systems, e.g., monitors are large enough to accommodate/view financial spreadsheet and other information.

l. Maintains the Financial Management Systems Inventory (FMSI) database for all Coast Guard financial and mixed systems.

m. Prepares feeder system security assurance assessments.

8.B.2 Chief, Office of Procurement Management (CG-85)

a. Facilitates the procurement of goods and services for the Coast Guard. Develop, coordinate and administer the Coast Guard procurement program, assuring compliance with applicable procurement laws, regulations and policies in all Coast Guard acquisitions activities.

b. Serves as the program sponsor for electronic acquisitions systems, e.g., Contract Information Management Systems (CIMS), Contract Information Systems (CIS), Department of Labor Online Wage Determinations (DOLS), and Contractor Performance System (CPS).

c. Serves as the Finance and Procurement systems training manager/coordinator.

d. Develops, implements, oversees, and evaluates Coast Guard-wide procurement automation system requirements including Electronic Commerce/Electronic Data Interchange (EC/EDI), Internet, FPD Fleet Logistics Systems (FLS), and CIMS. Participate in the maintenance of PMDIS.

8.B.3 U. S. Coast Guard Finance Center

a. Serves as the data center for Finance and Procurement information for the Coast Guard.

b. Serves as conduit/contact point to the U. S. Treasury (unless waived).

c. Unless otherwise mandated, serves as PKI (digital signature) public key control center.

d. Serves as central bill paying and financial accounting center.

e. Manages Finance and Procurement system hotlines (e.g., FPD hotline) and tracks call information for management review and improvement opportunities.

f. Manages the use of data telecommunications networks by Finance and Procurement systems (e.g., provides guidance on the use of FPD).

8.B.3
U.S. Coast Guard Finance Center
(Continued)

g. Maintains processes to receive and act on reports of discrepancies concerning Finance and Procurement data. Standards for responding shall be developed, and published on their web site and followed by FINCEN.

h. Monitors and reports to CG-84 on the performance of Finance and Procurement systems (e.g., accuracy, timeliness of FPD).

i. Develops, publishes, implements and conducts Finance and Procurement system certifications and re-certifications in accordance with best business and security practices (e.g., FPD certifications). Maintains a current list of all certified sites along with designated site administrators (e.g., FPD sites).

j. Establishes the standards for the Unit Approved Plan (UAP).

k. Provides on-site field support to Finance and Procurement systems, as necessary, to resolve technical issues that cannot be resolved through the use of hotlines. On-site visits are subject to available funding.

l. In coordination with CG-85, manages quotas for Finance and Procurement system resident courses.

m. Provides training instructors for FPD resident training held at Yorktown Training Center (YTC).

n. During financial or mixed financial application migration, coordinates field units' migration training in conjunction with CG-84.

o. Maintains financial or mixed financial "Help Files" available to users at the application level and through the application web pages.

8.B.4
U.S Coast Guard Training Center Petaluma

Subject to the availability of funding, shall:

a. Conducts the FPD basic training course.

b. Integrates FPD basic curriculum and other courses as needed (i.e., Oracle training -Assets, etc.) into the SK "A" school curriculum.

8.B.5 U.S Coast Guard Training Center Yorktown

Subject to the availability of funding, shall provide a training classroom for FPD resident training delivery.

8.C Responsibilities Assistant Commandant (CG-6)/Chief Information Officer (G-CIO)

1. Develops and maintains the IT vision and strategy for the Coast Guard.

2. Builds and fosters partnerships throughout the organization to ensure all Coast Guard IT investments support business processes and mission outcomes.

3. Develops and implements IT standards, methods and policies for the Coast Guard.

4. Final approval authority for all IT systems and projects. Responsible for oversight of IT investment and review process.

5. Central authority over IT systems architecture and development, with program managers executing IT development funds. Certifies key decisions for all major IT acquisitions. Oversees the development and deployment of Coast Guard-wide IT systems. Coordinates pre-acquisition development of IT systems.

6. Advises senior management on whether to modify and/or terminate IT projects.

7. Monitors and evaluates the performance of information systems on the basis of specific IT performance measures and their linkages to Coast Guard outcome measures.

8. Develops and administers service-wide information life-cycle management policies/procedures, to include the creation, use, maintenance, and disposition of records.

8.C Responsibilities Assistant Commandant (CG-6)/Chief Information Officer (G-CIO) (Continued)

9. Develops and administers the Coast Guard Information System Security Program Element of the USCG Security Program. Provides policy guidance for Coast Guard Automated Information System (AIS) security.

10. Chairs the Information Technology Management Board.

11. Through the Research Development and Technology Management program, select, develop and manage technology based solutions for operational, logistical, and management challenges.

8.C.1 Chief, Office of Computer Systems (CG-63)

a. Coordinates with CG-65 to ensure systems have security certifications.

b. Reviews and evaluates all Automated Information System (AIS) proposals. For financial/mixed systems, work with CG-84 to review RFAM/financial/mixed related AIS proposals prior to approval by the CIO.

8.C.2 Chief, Office of Information Technology Architecture (CG-6B)

a. Establishes and maintains Coast Guard IT architecture with input from IT program managers.

b. Monitors configuration management/release control on all systems.

8.D CFO and CIO Cooperation

The CFO Act of 1990 and the Clinger Cohen Act outline the requirements for cooperation between the CFO and CIO.

The CFO and CIO shall work together (under the direction of the agency head) and establish policies and procedures to ensure that:

1. Accounting, financial, and asset management systems of the executive agency are designed, developed, maintained, and used effectively to provide financial or program performance data for financial statements of the executive agency;

8.D
CFO and CIO Cooperation
(Continued)

2. Financial and related program performance data are provided on a reliable, consistent, and timely basis to executive agency financial management systems; and

3. Financial statements support:

   a. Assessments and revisions of mission related processes and administrative processes of the executive agency; and

   b. Performance measurement of the performance of investments made by the agency in information systems.

8.E
Responsibilities Headquarters, Area, and District Programs

1. Uses CG-8 authorized Finance and Procurement systems to conduct business functions.

2. Cooperates with CG-84 and CG-85 to provide timely information as required to respond to various external sources including Q&A's from Congress and data calls from DOT and the OMB.

3. Provides information as required to maintain the Financial Management System Inventory.

4. Ensures that all personnel follow FINCEN Standard Operating Procedures (SOP).

8.E.1
All Coast Guard Units

a. Uses approved Finance and Procurement systems to conduct business.

b. Uses the Microcomputer Allowance List (MAL) as a guide to determine the quantity of SWS equipment necessary to create, store, and transmit Finance and Procurement data.

c. Requests training necessary to maintain adequate minimum expertise.

d. Performs reconciliation's of unit records with Finance and Procurement systems in accordance with FINCEN and other applicable SOP's. Promptly reports all errors to FINCEN for resolution.

8.E.1 All Coast Guard Units (Continued)

e. For FPD, weekly reconciliation is required. Reconciles on behalf of units or staff elements for which they have a transmission responsibility; or ensure that reconciliation's and error reports are submitted by subordinate units. Establish adequate operating procedures for subordinate units in accordance with FINCEN SOP; and all operating procedures and instructions.

8.F Financial and Mixed Requirements - Mandatory Use

Finance and Procurement functions shall be carried out using systems approved by the Director of Finance and Procurement (CG-8). Use of CG-8 approved systems is mandatory unless specifically waived in writing.

8.F.1 FPD Authorized For Service-Wide Use

FPD is the only procurement and fund management software package authorized for service-wide use. **FPD** is the Coast Guard Standard Workstation III compatible version and includes enhanced simplified acquisition and funds management capabilities. Reimbursement from the Federal Emergency Management Agency (FEMA), COMDTINST 7300.8 is hereby cancelled and is replaced by the requirements/responsibilities listed in this chapter.

8.F.1.a Oracle Fixed Assets

Oracle Fixed Assets is the only authorized asset management system for the Coast Guard. This system shall be used for budget model allocation purposes (e.g., measurements of buildings from this system shall be used for allocating AFC 30 funds for the district budget model).

8.F.1.b Contract Information Management System

CIMS once deployed, shall be the only authorized formal contracting system.

8.F.1.c ORACLE Projects

ORACLE Projects is the only authorized cost tracking and billing system for Work-In-Process (WIP).

8.F.1.d ORACLE Project Accounting

1. This module is used individually within some Coast Guard units to share daily business intelligence with relevant project stakeholders through an integrated, collaborative system built using a common data repository.

2. The identifying number for real property in the Oracle Asset System. This consists of the OPFAC site and Real Property Facility Number (RPFN).

8.F.1.e Financial and Mixed Systems

Financial and mixed systems authorized for use within the Coast Guard shall be published on the Assistant Commandant for Planning, Resources, and Procurement web site.

8.F.2 Inventory of Finance and Procurement Systems

The OMB Circular A-127 requires the Coast Guard to yearly update the inventory of existing and proposed financial management systems. This information is necessary to complete the CFO five year Financial Management Plan and to manage Finance and Procurement systems. Financial management systems shall be included in the Coast Guard's information systems inventory following the information system inventory policies established in OMB Circular A-130. All cognizant program managers shall provide information to CG-84 to maintain this inventory.

This database shall be used to prepare various reports and answer various data calls.

8.F.3 Data Entry Transmission

Efficient and effective management of Finance and Procurement requires the electronic transmission of data between many different people. Critical elements of this are digital signature and electronic commerce. Best practices use of digital signature and electronic commerce capabilities shall be built into all financial and mixed systems. Finance and Procurement data shall be entered/captured electronically one time at the source. From then on it shall be moved electronically with minimal intervention. This makes the use of a standard system essential in order to reduce data entry and other redundancies and therefore control costs.

8.F.4 Commercial Of the Shelf-Government Off the Shelf COTS/GOTS

Coast Guard personnel shall use of COTS/GOTS financial and mixed financial systems and shall develop systems only when a COTS solution is unavailable. Where practical, business processes shall generally be changed to accommodate the COTS/GOTS system. Coast Guard personnel shall not customize COTS/GOTS beyond that authorized by the vendor; e.g., ORACLE extensions are allowed but changes to code are not. Changing code in COTS/GOTS products limits the ability to upgrade packages in the future. As a result, costs and time needed to maintain systems, quickly becomes prohibitive. Financial and Procurement systems shall be upgraded so as to never become more than two versions behind the latest release of the COTS/GOTS products.

8.F.5 Standards Products

To minimize costs of financial and mixed systems the Coast Guard shall use a standard database and standard suite of applications for financial and mixed systems. The standard product line (e.g., ORACLE) shall be published on the Finance and Procurement Directorate web site.

8. F.6 New or Changing Requirements for a New System and or Design Modification

Coast Guard units that have a design modification or a new requirement for a financial or mixed system shall submit their requirement to CG-84 for review. CG-84 shall review these requirements in conjunction with the RFAM external requirements and work with the submitting office to develop a timely, cost effective solution to the requirement. CG-84 will render a decision on changes to financial requirements within 10 working days. On-going maintenance to financial or mixed systems such as changes to payroll entitlements do not require approval by CG-84. First consideration shall be given to modifying existing systems to meet the new needs. The most costly solution is frequently the development of a new system. This alternative shall be pursued only if it makes sound business sense.

8. F.7 Comparability and Consistency

The design of the financial management systems shall be in conformance with the guidelines of JFMIP and reflect an agency-wide financial information classification structure that is consistent with the United States Government Standard General Ledger, which provides for tracking of specific program expenditures, and covers financial and financially related information. Financial management systems' designs shall support agency budget, accounting and financial management reporting processes by providing consistent information for budget formulation, budget execution, programmatic and financial management, performance measurement and financial statement preparation.

8. F.8 Integrated Financial Management Systems

Financial management systems shall be designed to provide for effective and efficient interrelationship between software, hardware, personnel, procedures, controls, and data contained within the systems. Specific guidance on these requirements is included in U.S. Coast Guard Common Operating Environment (USCG COE), COMDTINST 5230.59 (series) and CG Data Element Naming Standards, COMDTINST 5230.42 (series). In doing so, they shall have the following characteristics:

a. Common Data Elements

b. Common Transaction Processing

c. Consistent Internal Controls

d. Efficient Transaction Entry: Wherever appropriate, data needed by the systems to support financial functions shall be entered only once and other parts of the system shall be updated through electronic means consistent with the timing requirements of normal business/transaction cycles.

8. F.8.a Systems That Do Not Interface With FPD

Program managers sponsoring existing systems, which do not interface with FPD and which create obligations or result in the recording of direct charges on unit Program Element Status (PES) **shall have electronic transfer of data to FPD as part of any system upgrades**. Any such upgrades shall be reviewed by CG-8 prior to development.

8.F.9 U. S. Government Standard General Ledger at the Transaction Level

Financial events shall be recorded throughout the financial management system applying the requirements of the U.S. Government Standard General Ledger (SGL) at the transaction level.

8.F.10 Federal Accounting Standards

Financial management systems shall maintain accounting data to permit reporting in accordance with accounting standards recommended by the Federal Accounting Standards Advisory Board (FASAB) and issued by the Director of OMB, and reporting requirements issued by the Director of OMB and/or the Secretary of the Treasury. Where no accounting standards have been recommended by FASAB and issued by the Director of OMB, the systems shall maintain data in accordance with the applicable accounting standards used by the agency for preparation of its financial statements. Agency financial management systems shall be designed flexibly to adapt to changes in accounting standards.

8.F.11 Financial Reporting

The financial management system shall meet the reporting requirements established by JFMIP, OMB, Treasury and DHS.

8.F.12 Budget Reporting

Financial management systems shall enable the Coast Guard to prepare, execute and report on the budget in accordance with the requirements of OMB Circular No. A-11 (preparation and submission of budget estimates), OMB Circular No. A-34 (instructions on budget execution) and other circulars and bulletins issued by OMB.

8. F.13 Functional Requirements

Financial management systems shall conform to existing applicable functional requirements for the design, development, operation, and maintenance of financial management systems. Functional requirements are defined in a series of publications entitled Federal Financial Management Systems Requirements issued by the Joint Financial Management Improvement Program (JFMIP). Additional functional requirements may be established through OMB circulars and bulletins and the Treasury Financial Manual.

8.F.14 Computer Security Act Requirements

Program managers shall plan for and incorporate security controls in accordance with the Computer Security Act of 1987 and Circular A-130 for those financial management systems that contain "sensitive information" as defined by the Computer Security Act. Specific requirements for system security and accreditation are listed in Automated Information Systems (AIS) Security Manual, COMDTINST M5500.13 (series).

8.F.15 Documentation

Financial management systems and processing instructions shall be clearly documented to allow ready access in accordance with (a) the requirements contained in the Federal Financial Management Systems Requirements documents published by JFMIP or (b) other applicable requirements. All documentation (software, system, operations, user manuals, operating procedures, etc.) shall be kept up-to-date and be readily available for examination. System user documentation shall be in sufficient detail to permit a person, knowledgeable of the agency's programs and of systems generally, to obtain a comprehensive understanding of the entire operation of each system. Technical systems documentation such as requirements documents, systems specifications and operating instructions shall be adequate to enable technical personnel to operate the system in an effective and efficient manner.

8. F.16 Internal Controls

The financial management systems shall include a system of internal controls that ensure resource use is consistent with laws, regulations, and policies; resources are safeguarded against waste, loss, and misuse; and reliable data is obtained, maintained, and disclosed in reports. Documentation of internal controls shall be sufficient to satisfy external audit requirements. Appropriate internal controls shall be applied to all system inputs, processing, and outputs. Such system related controls form a portion of the management control structure required by Circular A-123.

8. F.17 Training and User Support

Adequate training and appropriate user support shall be provided to the users of the financial management systems, based on the level, responsibility and roles of individual users, to enable the users of the systems at all levels to understand, operate and maintain the system. Program managers shall ensure that all individuals are appropriately trained/qualified before allowing them access to the system. Such training shall assure that employees are adequately versed in the rules of the system operation. Training is expensive, therefore systems shall be designed and training developed with close attention to training costs.

8.F.17 Training and User Support (Continued)

a. Training shall be an integral part of the system and shall consist of a blend of:

1. Schools
2. Hotlines
3. On the Job Training (OJT)
4. Help facilities
5. Computer Based Training

b. Cost effective qualification standards for employees following best business practices shall be established and adhered to.

8.F.18 Licenses

Most software including applications, databases and related tools have licensing requirements.

8. F.18.a Software Project Managers

Software project managers for Finance and Procurement systems shall only develop, implement and operate systems if required licenses are in place. Pursuant to this requirement, project managers shall obtain required automated information systems approval from CG-63 prior to obtaining licenses. Planning and budgeting for Finance and Procurement systems shall include provisions for applicable licenses. Project managers are responsible for procuring the appropriate number of licenses for their projects and shall ensure that this number is not exceeded. Project managers shall provide license management information to CG-63 and CG-84.

8. F.18.b Achieve-Effectiveness and Efficiencies

To achieve effectiveness and efficiencies, the Coast Guard designates certain pieces of software as the standard for use throughout the Coast Guard (e.g. ORACLE Financials for accounts receivable applications). For Finance and Procurement systems the Coast Guard CFO, with the advice and consent of the CIO, establishes the standard software to be used. The list of the standard financial software shall be published on the Finance and Procurement Directorate web site.

8.F.18.c Standardization Policy

To implement this software standardization policy, the Coast Guard stocks various licenses. Existing Coast Guard owned licenses are mandatory sources of supply for all development, implementation and operation of Finance and Procurement systems. CG-6B is the stocking point for ORACLE databases, other ORACLE business products. CG-6B shall publish standard operating procedures on license requisitioning on the Information and Technology Architecture web site. CG-6B is authorized to designate distribution points for software licenses and establish SOP's for operation of distribution points. Written authorization shall be obtained from CG-84 and CG-6B prior to obtaining ORACLE licenses for Finance and Procurement systems other than the Coast Guard stocks.

8.F.19 Maintenance

On-going maintenance of the financial management systems shall be performed to enable the systems to continue to operate in an effective and efficient manner. Program managers shall periodically evaluate how effectively and efficiently the Finance and Procurement management systems support the agency's changing business practices and make recommended changes (modifications) to CG-84.

8.F.20 Financial Reporting Requirements

The CG will submit all financial and finance related reports as required by the Congress, OMB, Treasury, OPM, DOL, GSA and DHS.

a. In general, the FINCEN shall prepare and submit all financial reports required by DHS. These reports include the balance sheet, statement of net cost, statement of changes in net position, statement of budgetary resources, statement of financing and statement of custodial activity.

b. The ICPs and CG Yard shall submit their trial balances and financial reports to the FINCEN in time for the FINCEN to review and incorporate this data into the consolidated CG financial statements to DHS.

c. For months that are not at the end of a quarter, the ICPs and Yard shall submit their trial balances and reports to the FINCEN by the first work day of the next month.

8.F.20 Financial Reporting Requirements (Continued)

d. For months at the end of a quarter, the ICPs and Yard are to submit their files and reports as follows:
   - December Noon on 12/31
   - March Noon on 3/31
   - June Noon on 6/25
   - September Noon on 9/24

   If the due date is a weekend or holiday, the date is revised to be the first workday prior to the above date.

e. AR&SC and the Yard will submit the following reports each month to the FINCEN with a copy to CG-842:
   - Allotment ledger
   - Trial Balance with all accounts and attributes in the
   - correct relationship

f. The ELC, Yard and AR&SC will submit the following reports each quarter to the FINCEN with a copy to CG-842:
   - Change in OE Inventory Position Summary Report
   - Consumable OM&S Status Report
   - Inventory Reconciliation
   - Trading Partner Report
   - Cost of Goods Sold Disclosure Report
   - NTNO report (ARSC only)
   - Note 9. Inventory and related property report with footnote

g. The ELC and AR&SC will submit the following report each quarter to CG-842 and a copy to the FINCEN:
   - Reparable PPE Listing by asset class and aircraft type

h. The AR&SC and the Yard will submit the following reports to the FINCEN as of 30 June and 30 September with a copy to CG-842:
   - Net Cost report

i. The ICPs and Yard shall have all account balances in the correct relationships before transmitting the files to the FINCEN.

Encl 8-1 Key Legislation and Regulations

The Clinger Cohen Act (Previously known as Information Technology Management Reform Act of 1996): The key aspects/requirements of this Act are:

a Establish a Chief Information Officer (CIO).

b Develop a "Capital Planning and Investment Control" Process for IT. The primary elements include:

1. Selection of IT investments to be made by the Coast Guard, the management of those investments, and the evaluation of the results of those investments.

2. Integration of this methodology with Coast Guard processes for making budget, financial, and program decisions.

3. Development of performance goals/measures for each operating IT System.

c. Develop a "Modular Contracting" Strategy for each IT project under development. This allows for managing contract deliverables, cost, and insertion of technology advances.

d. Clinger-Cohen hyperlink address: http://www.rdc.noaa.gov/~irm/div-e.htm

8-1.A Chief Financial Officer's Act (CFO) of 1990

The CFO Act mandates that agency CFOs are to develop and maintain agency financial management systems that comply with applicable accounting principles, standards, and requirements; internal control standards; and requirements of OMB, the Department of the Treasury, and others. http://www.gao.gov/policy/12_19_4.htm

8-1.B DOT Order 2300.3b

Dated December 03, 1996, DOT Financial Management System Policy. This Order outlines the policy and direction of financial management systems in the DOT. It implements OMB Circular A-127. This order is to be followed until superceded by DHS policy.

8-1.C Federal Manager's Financial Integrity Act (FMFIA) of 1982

FMFIA act requires agency heads to establish controls that provide reasonable assurances that (1) obligations and costs comply with applicable law; (2) funds property, and other assets are safeguarded against waste, loss, unauthorized use, or misappropriation; and (3) revenues and expenditures are properly recorded and accounted for.

8-1.D Federal Financial Management Improvement Act (FFMIA) of 1996

FFMIA requires each agency to implement and maintain financial management systems that comply substantially with federal financial management system requirements, applicable federal accounting standards, and the United States Government Standard General Ledger at the transaction level. http://www.financenet.gov/financenet/fed/legis/ffmia96.htm

8-1.E Government Performance Results Act (GPRA, of 1993 P.L. 103-62)

GPRA of 1993 requires agencies to develop strategic plans, set performance goals, and report annually on actual performance compared to goals. As the federal government implements this legislation, these plans and goals should be integrated into (1) the budget process, (2) the operational management of agencies and programs, and (3) accountability reporting to the public on performance results, and on the integrity, efficiency, and effectiveness with which they are achieved.

8-1.F National Institute of Standards and Technology (NIST) Special Publication 800-18

The publication addresses the development of security plans that document the management, technical, and operational controls for federal automated information systems. The publication provides guidance for individuals responsible for IT security at the system level and at the organization level. It is written specifically for individuals with little or no computer security expertise. Auditors, managers, and IT security officers can also use the document as an auditing tool. The concepts presented are generic and can be applied to organizations in private and public sectors. http://www.nist.gov/itl/lab/bulletns/april99.htm

8-1.G OMB Circular A-11 Part 3

Planning, Budgeting, and Acquisition of Capital Assets (7/1/1998) - Provides the annual update of guidance on planning, budgeting, and acquisition of capital assets.

8-1.H OMB Circular A-123

Management Accountability and Control, Revised June 21, 1995. This circular provides guidance to federal managers on improving the accountability and effectiveness of federal programs and operations by establishing, assessing, correcting, and reporting on management controls. The circular also provides guidance on using the range of tools at the disposal of agency managers to achieve desired program results and meet the requirement of the Federal Managers' Financial Integrity Act (FMFIA).
http://www.whitehouse.gov/OMB/circulars/a123/123.html

8-1.I OMB Circular A-127

Financial Management Systems, Revised, Transmittal, Memorandum No. 1, July 23, 1993 - Prescribes policies and standards for executive departments and agencies to follow in developing, operating, evaluating, and reporting on financial management systems. It defines the financial management system requirements.
http://www.whitehouse.gov/OMB/circulars/a127/a127.html#8

8-1.J OMB Circular A-130

Management of Federal Information Resources, Revised, Transmittal Memorandum No. 3, February 08, 1996, Agencies shall implement and maintain a program to assure that adequate security is provided for all agency information collected, processed, transmitted, stored, or disseminated in general support systems and major applications.
http://www.whitehouse.gov/OMB/circulars/a130/a130.html

8-1.K Joint Financial Management Improvement Program (JFMIP): Framework for Financial Management Systems, January 1995

The Framework for Federal Financial Management Systems document describes how the various financial management systems covered in the specific requirements documents fit together and how these systems should be integrated to meet the needs of program and financial managers of the government. It includes overarching requirements, such as security, internal controls, data stewardship, and system architecture elements.

8-1.L Joint Financial Management Improvement Program (JFMIP): Core Financial System Requirements

February, 1999 The Core Financial System Requirements document lists mandatory requirements, which must be satisfied by any software prior to it being qualified for use by federal agencies. The Knowledge base also lists other requirements, called value added. The value added requirements will be used to gather information from vendors about technical and functional software capabilities that agencies may find useful but which are not necessary to be satisfied to obtain qualification. The PMO testing and certification process does not include value-added requirements.

8-1.M Raines Rules (OMB Policy Memorandum M-97-02 of Oct 25, 1996)

"Investments in major information systems proposed for funding in the President's budget should:"

1. Support core/priority mission functions that need to be performed by the federal government.

2. Be undertaken by the requesting agency because no alternative private sector or governmental source can efficiently support the function.

3. Support work processes that have been simplified or otherwise redesigned to reduce costs, improve effectiveness, and make maximum use of commercial off-the-shelf technology.

4. Demonstrate a projected return on the investment that is clearly equal to or better than alternative uses of available public resources.

5. Be consistent with federal, agency, and bureau information architectures.

6. Reduce risk by using fully tested pilots or prototypes; establishing clear measures and accountability for project progress.

7. Be implemented in phased, successive chunks, and

8. Employ an acquisition strategy that appropriately allocates risk between government and contractor, effectively uses competition, ties contract payments to accomplishments, and takes maximum advantage of commercial technology.

Encl 8-2 Summary of the RFAM Task Group

To meet the goals embodied in legislation, in 1997 the Coast Guard established the Resource Financial and Asset Management (RFAM) Task Group and a working group to review energy conservation and fuel consumption across cutters, aircraft and facilities.

8-2.1 Goal of the RFAM

The goal of the RFAM Task Group was to **identify major gaps** in compliance between USCG business systems and processes and the existing resource, financial, and asset management requirements. The objectives included the following:

a. Receipt of an unqualified opinion for the FY99 CFO Act audit. An unqualified opinion means that the financial statement data accurately reflect the results of operations, internal controls are effective, and prevailing laws are observed.

b. Successful Implementation of GPRA and Federal Cost Accounting Standards. The implemented solution must conform to the guidelines established by DOT, OMB, and Congress for FY99, as well as cost standards as prescribed by the JFMIP and the FASAB.

c. Successful Resource Management of Multiyear/Multi-Account Appropriations. Success means being able to respond to USCG management needs and completely and accurately answer OMB and congressional questions in a timely manner.

d. Development of an enterprise-wide system architecture and strategic plan to achieve the USCG technology vision, including strategic guidance to optimize Y2K expenditures. The enterprise-wide system architecture includes effective integration of related existing and emerging information systems. Effective integration means the systems are implemented and maintained enterprise wide in a cost-effective manner consistent with USCG business objectives.

e. Coast Guard Process-Management Model Integration.

8-2.1 Goal of the RFAM (Continued)

f. Implementation Approach (From Coast Guard Functions to Specific Applications to Coast Guard-Wide Systems.).

g. Functional Statements for the CFO, CIO, and the CG-8.

The key points that were derived from the RFAM Task Group included:

1. The cost of managing, operating, and maintaining redundant systems are high.

2. We must avoid redundant systems to provide Finance and Procurement services the Coast Guard at the lowest possible costs.

3. Large number of systems and their diverse interconnections make it difficult to introduce new, more integrated solutions.

Key processes within the family of functions must be fully automated.

For more information on the contents of the task group, refer to RFAM Within the U.S. Coast Guard Final Report, Dated May 1999.

8-2.2 Family of Functions

Based on the Management Model, the Family of Functions was derived for each primary function. The functions for the general framework of responsibilities required with the overall management context. The Family of Functions also contains several sub-processes, which are directly affected by RFAM Systems and management of resources.

Planning and Direction is composed of:

Strategic Planning
Budgeting (Formulation, Presentation and Justification)
Forecasting
Analysis

8-2.2 Family of Functions (Continued)

Finance and Procurement is composed of:

Budget Execution, Planning, Forecasting, Analysis
Contracting/Procurement
General Ledger
Cost Accounting

Human Resources is composed of:

Payroll/Personnel Records
Medical
Education/Training/Development
Recruiting/Assignment/Travel
Workforce Planning
Morale, Well-Being and Recreation
Coast Guard Exchange System
Commissaries
W-L

Engineering and Logistics is composed of:

Civil Engineering
Aviation Engineering
Naval Engineering
Electronic Engineering
Logistic Engineering

Operations is defined by the Coast Guard Performance Goals:

Safety
Human & Natural Environment
Mobility
Economic Growth & Trade
National Security

9.A Capitalization of Real and Personal Property

To provide policy for the Capitalization of real and personal assets including those assets acquired through purchase or resulting from Construction in Progress (CIP) projects.

Construction in Progress (CIP) consists of the costs of the direct materials, direct labor, direct purchased services, and indirect costs used in producing customized (constructed, fabricated and/or assembled) Personal and/or Real property, whether fabricated by the US Coast Guard (USCG) or by a non-USCG organization under contract, including Military Interdepartmental Procurement Request (MIPR).

Examples of work in progress are: Costs of additions, alterations, improvements, rehabilitations, and replacements of USCG assets. Upon completion, these costs shall be transferred to the proper capital asset account as the acquisition cost of the item.

This policy applies to all capitalizable real and personal property assets (general PP&E) acquired by the United States Coast Guard which require construction, refurbishing, assembly, or similar effort. This policy is effective for all new projects initiated on or after October 1, 2005.

9.B References

1. Statement of Federal Financial Accounting Standards (SFFAS) #4 “Managerial Cost Accounting Concepts and Standards for the Federal Government”
2. Statement of Federal Financial Accounting Standards (SFFAS) #5 “Accounting for Liabilities of the Federal Government”
3. Statement of Federal Financial Accounting Standards (SFFAS) #6 “Accounting for Property, Plant and Equipment”
4. Finance Center Standard Operating Procedure Manual, FINCENSTFINST M7000.1
5. Chief Financial Officers Act of 1990 (“CFO Act”).

9.C Purpose

The purpose of this policy is to produce unit valuation in the General Ledger that can be supported and repeated by documentation in the Core Accounting System (CAS) documentation and asset file.

9.D Responsibilities

This section lists the offices and their respective responsibilities for real and personal CIP project accounting.

9.D.1 Asst Comdt for Planning Resources & Procurement (CG-8)

Develops, promulgates, and implements Coast Guard financial management policy for real and personal CIP project accounting used by Headquarters Program/Facility Managers, FINCEN, Area and District Commanders, Commanders of MLCs and Field Unit Commanding Officers, and Officers in Charge.

9.D.2 Office of Resource Management, Budget Execution Division (CG-831)

1. Provides centralized management for AC&I.
2. Provides the initial information to the HQ Offices, FINCEN, and CG-842 that an AC&I project may meet the capitalization threshold.

9.D.3 Office of Systems Management (CG-841)

1. Establishes, designates or designs and certifies all financial systems, including hardware and software for real and personal CIP projects.
2. Ensures that all designed financial systems provide adequate systematic controls.

9.D.4 Office of Internal Controls and Asset Management (CG-842)

1. Provides oversight, analysis, and financial management standards for all real and personal CIP project accounting.
2. Develops, promulgates, and implements policy and procedures for tracking and accounting for real and personal CIP project accounting.
3. Oversees implementation of internal controls for CIP project accounting.
4. At least quarterly, meets with the AC&I fund managers to identify the complete universe of capitalizable projects or assets within the CG.
5. Convenes the CIP project group consisting of the Acquisition Project Manager, Resource Manager, Sponsor Representative, Independent Operational Test & Evaluation Advisor, CG-842 Analyst, FINCEN Representative, and the CG-831, as necessary, to evaluate the set up of capitalizable projects.
6. Monthly, reviews the CIP Analysis Report provided by FINCEN that provides at least the following project information by project number: document information such as description, number and type, dollars expended, accounting line, etc. so that

9.D.4 Office of Internal Controls and Asset Management (CG-842)
(Continued)

project status can be updated.

7. Reviews and approves CIP capitalization project plans at inception to identify cost components, and facilitate subsequent accurate and timely asset capitalization.
8. Reviews CIP projects on a monthly basis to ensure accuracy and alignment with policy.
9. Develops and implements CIP project accounting training for HQ and other key personnel involved in the capitalization process.
10. Requires that all Acquisition/Project Managers (APM) are designated in writing.
11. Requires consistency between HQ Program Offices in the treatment of costs and the application of overhead.
12. Provides guidance to AR&SC, ELC/Yard, and HQ Program Offices on development of indirect rates, including composition, basis for application, and variance analysis.
13. Performs annual review and approval of indirect cost rates.
14. Develops a high-level Standard Operating Procedure for the creation, monitoring, and close-out of CIP projects.

9.D.5 Office of Procurement Management (CG-85)

1. Provides guidance to CG Contracting Officers (KO) to ensure that KOs understand the reasons why Project and Financial managers need to clearly identify the different types of assets that will be purchased via contracts and/or MIPRs.
2. Provides guidance to CG KOs to ensure that they understand why Project and Financial Managers are requesting the use of separate contract line item numbers (CLIN) with separate accounting information if the contract will procure different types of assets (Aircraft, Vessels, Small Boats, Operating Materials & Supplies, etc.) via the same contract. In other words, require the use of a unique funding source for each type of asset purchased on a single contract.
3. Require that every contract with the CG for the development or delivery of capital assets (over $50K) have the requirement for a signed acceptance report such as a DD-250 or DHS Form 700-21, Standard Form (SF) 1149 or Optional Form (OF) 347, in order to document the valuation and/or acceptance date of CG assets.

9.D.6 Finance Center (FINCEN)

1. Maintains general ledger balances and supporting documentation for valuation of CIP projects, and real and personal property.
2. In conjunction with CG-842 and HQ Program Managers, reviews CIP projects to determine which real and personal CIP projects meet the criteria for capitalization tracking, and enters and monitors capital projects in designated systems.
3. In conjunction with CG-842 and the appropriate APM, reviews the allocation methodology for all indirect costs.
4. Monitors construction and improvement projects to ensure timely capitalization of completed assets occurs.
5. Distributes accurate and timely CIP project accounting reports to APM's on a monthly basis.
6. Retains key documentation supporting the capitalization of CIP assets. "Key capitalization documentation is defined as information that helps CG support the date in service or use, valuation and ownership of its assets. For most large CG assets this information will be provided by: 1) a Contract or Military Interdepartmental Procurement Request (MIPR) between CG and a supplier, 2) a request for payment by the supplier, normally in the form of an invoice or DD-250/DHS 700-21, 3) a receiving report by the CG, normally in the form of an acceptance signature on a DD-250/DHS-700-21, or an acquisition certification for payment by a Contracting Officer or their representative and 4) electronic expenditure information in the CG's accounting system."
7. Assists APM and CG-842 with the periodic review of CIP projects.
8. Assists CG-842 in developing a high-level Standard Operating Procedure (SOP) for the creation, monitoring, and close-out of CIP projects.
9. Creates additional detailed SOP for CIP processes conducted within the FINCEN.
10. Upon receipt of documentation, enters all capitalized property assets into the fixed asset system.
11. Reconciles property records quarterly to general ledger accounts.
12. Provides financial information and reports to HQ Program Offices.
13. Maps AC&I expenditures to projects based on program elements and appropriation data.
14. Review PES reports on a weekly basis to determine if all expenditures are reflected in the appropriate projects. The documentation for these expenditures is gathered and reviewed.

9.D.7 Headquarters Program Offices

Pertinent program offices:

- Deepwater (G-D)
- Acquisitions (G-A)
- Engineering and Logistics Directorate (CG-4)
- Office of C2 and Navigations Systems Support (CG-64)
- Assistant Commandant for Operations (G-R)
- Assistant Commandant for Human Resources (CG-1)

1. Provides Acquisition Project Manager (APM) name and organizational information to CG-842 for projects that may meet the capitalization threshold.
2. Ensures that APM's timely, completely, and accurately record capitalized assets.
3. Manages and monitors the distribution of project funds.
4. For all capitalizable projects, provides all required project setup data to FINCEN (FR) within 15 calendar days of contract award. Responsible for the timely review and certification of the CIP Analysis report and provides any necessary corrections to FINCEN (FR) within two weeks of receipt of the report. Reviews and provides final PMDS form to FINCEN and CG-842 within three weeks.

9.D.7.a Headquarters Program Offices – AC&I Acquisition Project Managers

1. At the initiation of each CIP project, an APM will be specially designated in writing by either the Chief of Staff (Major Acquisition) or the responsible Project Office (G-A, G-D, CG-4/6, etc.) for projects that do not meet the Major Acquisition requirements. The APM shall ensure that FINCEN and CG-842 receive a copy of the signed APM designation letter.
2. Responsible for timely, accurate project set up.
3. Establishes and maintains data elements such as project manager name, ……, (AC&I will use a unique six digit program element), as well as the other data fields contained in the PMDS-Project Initiation form which include a Project Description, Types of Assets, Asset Delivery Schedule, Acceptance Criteria, and Asset Valuation Method and ensure that current information is provided to FINCEN-FR and CG-842. (See Section 9.I.)
4. Provides POC contact information to FINCEN-FR and CG-842 for related financial status of CIP projects.
5. Provides oversight of CIP projects, including approval and update of asset completion/delivery schedules, indirect cost methodologies, asset acceptance criteria, number and types of assets being delivered as part of the project, etc.

9.D.7.a Headquarters Program Offices – AC&I Acquisition Project Managers (Continued)

6. Coordinates with various project team members and provides CG-842 and FINCEN-FR with CIP project information including direct and indirect costing methodologies, asset delivery schedules, asset acceptance criteria, required documentation, etc.
7. Calculates and maintains accurate indirect cost rates in accordance with CG-842 approved costing methodologies.
8. Implements local SOPs for management of their specific CIP projects. Ensures these procedures are in alignment with the CG's CIP policy and SOP via an effective internal control program.
9. Conducts and updates delivery schedules on at least a quarterly basis, and estimates and rates (direct and indirect costs) used for capitalization of assets.
10. Reconciles accounting systems records and certifies reports with local CIP project records on a monthly basis.
11. Reports the status of assets delivered on a monthly basis to FINCEN on all CIP projects.
12. Provides timely, complete, and accurate capitalization information to FINCEN FR for all assets from CIP projects.
13. Within two weeks of "delivery" or placing a constructed asset "in service" the Business/Financial Managers provide the APM with complete and accurate capitalization information for assets being delivered or transferred from CIP projects.
14. Responsible for timely review and certification of the CIP Analysis report and provides any necessary corrections to FINCEN FR within two weeks of receipt of the report.
15. Develops and/or applies the AC&I Labor to AC&I projects.

9.D.8 Coast Guard Remote Accounting Facilities: YARD & ARSC

The CG Yard and AR&SC must provide the HQ Project/Resource Manager with an accounting of the funds used in support of the project and keep the necessary documentation to support the historical cost of the OM&S or project improvement. At times, the CG Yard/ELC and/or AR&SC provide project support, in whole or in part, for CG CIP projects. The work performed at these activities ranges from purchase, valuation, and warehousing of parts for future logistic support to adding improvements to existing CG aircraft and vessels. In this project role these activities are normally supporting larger CG projects and receive funding transferred from Project Managers or Project Sponsors that must be accounted for as a part of the larger CG project. These transferred funds may result

9.D.8 Coast Guard Remote Accounting Facilities: YARD & ARSC
(Continued)

in the creation of separate assets such as OM&S (e.g., parts in support of future C-130 operations) or improvements to existing assets (HH-65 Re-engine project). Funding received by the CG Yard/ELC/AR&SC from Project Managers/Sponsors must be tracked and reported to the Project Manager/Sponsor so that all funding associated with an AC&I program element can be accounted for and documented. Since funding transactions for many of these projects are not processed within the CG's Core Accounting System (CAS), these entities must use their own accounting and associated project/job order costing systems to track and, if appropriate, capitalize these expenditures.

The CG HQ Project/Resource Manager will designate in writing an assistant project manager at the CG Yard/ELC and/or AR&SC who will be executing the HQ project funds. This designation letter will be accompanied by additional project information that identifies whether the funding will be part of a larger Capitalizable or Expense project. It will provide or require the entity to provide information regarding the expected assets and/or improvements to be delivered, and whether the expenditures will result in separate assets that will be accounted for in the Yard/ELC and/or AR&SC's records (e.g., OM&S), or if the expenditure will result in assets/improvements that will be accounted for in the CG's Fixed Asset or CIP accounts (e.g. HH-65 Re-engine project). In addition, the designation letter will address the monthly and quarterly reporting responsibilities and the required reconciliation that must be provided to the HQ P/RM.

The P/FM shall ensure that FINCEN and CG-842 receive a copy of the signed designation letter. The assistant P/FM at the CG Yard, ELC or AR&SC will be responsible for:

1. CIP project accounting at their respective activities.
2. Retaining procurement, acquisition, transfer, and disposal documentation for capitalized real and personal property assets not capitalized in ORACLE.
3. Forwarding procurement, acquisition, transfer, and disposal documentation to FINCEN for all ORACLE related assets.
4. Recording all capitalized real and personal property assets into the appropriate accounting/property system, i.e., NESSS/ORACLE.
5. Maintaining CIP projects in an audit-ready status.
6. Reporting CIP values to FINCEN on a quarterly basis.

9.D.8 Coast Guard Remote Accounting Facilities: YARD & ARSC
(Continued)

7. Establishing and maintaining data elements such as project manager name, name of project, key members, six digit program elements as well as other data required to complete the Project Management Data Sheet (PMDS) and ensuring that current information is provided to FINCEN and CG-842.
8. Acting as POC for FINCEN and CG-842 for related financial status of CIP projects.
9. Coordinating with various project team members and providing the HQ PM with CIP project information, including direct and indirect costing methodologies, asset delivery schedules, asset acceptance criteria, required documentation, etc.
10. Calculating and maintaining accurate indirect cost rates in accordance with CG-842 approved costing methodologies.
11. Reconciling accounting systems records and certifying reports with local CIP project records on a monthly basis.
12. Within two weeks of "delivery" or placing a constructed asset "in service" the B/FM provides the PM with complete and accurate capitalization information for assets being delivered or transferred from CIP projects.
13. Developing any necessary office-level SOPs to support the standardized CIP SOP.
14. Reviewing and certifying the CIP Analysis report in a timely manner and providing any necessary corrections to FINCEN FR within two weeks of receipt of the report.

9.D.9 MLCs, Districts, FDCCs, CEUs, and Field Units

At times the MLCs, Districts, FD&CCs, CEUs, and Field Units provide project support for CG CIP projects. The work performed at these activities normally is associated with building or improving CG real property assets or Electronic Systems. In this project role, these activities normally are supporting larger CG projects (e.g., Deepwater Facility Improvements) that receive funding transferred from Project Managers or Project Sponsors that must be accounted for as a part of the larger CG project. In order for the Project Manager/Sponsor to properly account for all funding associated with their AC&I program elements, these external entities must provide the HQ Project/Resource Manager with an accounting of the funds used in support of the project and provide the necessary documentation to support the historical cost of the real property project or improvement.

The CG HQ Project/Resource Manager will designate in writing an assistant project manager at the MLCs, Districts, FD&CCs, CEUs, and Field Units who will be executing the HQ project funds. This designation letter will be accompanied by additional project

9.D.9 MLCs, Districts, FDCCs, CEUs, and Field Units (Continued)

information that identifies whether the funding will be part of a larger Capitalizable or Expense project. It will provide, or require the entity to provide, information regarding the expected assets and/or improvements to be delivered and whether the expenditures will result in separate assets. In addition, the designation letter will address the monthly and quarterly reporting responsibilities and the required reconciliation that must be provided to the HQ P/RM. The P/FM shall ensure that FINCEN and CG-842 receive a copy of the signed designation letter. The assistant P/FM at the MLC, Districts, FC&CC, CEUs will be responsible for:

1. Retaining procurement, acquisition, and transfer documents; developing, promulgating, and implementing local policy and procedures as necessary for the management of real and personal CIP projects.
2. Completing timely and accurate review and certification of real and personal CIP projects on a monthly basis.
3. Informing FINCEN and CG-842 of all real property construction and improvement projects meeting criteria for capitalization.
4. Responsible for timely and accurate recording of assets from CIP projects into the appropriate system.
5. Notifying FINCEN and CG-842 in a timely manner when real and personal CIP projects are completed.
6. Performing reviews of all CIP projects at time of project closure.
7. Establishing and maintaining data elements such as project manager name, name of project, key members, six digit program elements as well as other data required to complete the Project Management Data Sheet (PMDS), and ensuring that current information is provided to FINCEN and CG-842.
8. Acting as POC for FINCEN and CG-842 for related financial status of CIP projects.
9. Coordinating with various project team members and providing the PM with CIP project information, including direct and indirect costing methodologies, asset delivery schedules, asset acceptance criteria, required documentation, etc.
10. Calculating and maintaining accurate indirect cost rates in accordance with CG-842 approved costing methodologies.
11. Reconciling and certifying accounting systems records and reports with local CIP project records on a monthly basis.
12. Within two weeks of “delivery” or placing a constructed asset “in service” the Business/Financial Manager provides the PM with complete and accurate capitalization information for assets being delivered or transferred from CIP projects.

9.D.9 MLCs, Districts, FDCCs, CEUs, and Field Units (Continued)

13. Developing any necessary office-level SOPs to support the standardized CIP SOP.
14. Responsible for the timely review and certification of the CIP Analysis report and providing any necessary corrections to FINCEN FR within two weeks of receipt of the report.

9.E Plant, Property and Equipment (PP&E)

PP&E is defined as "Tangible assets that (1) have an estimated useful life of 2 or more years, (2) are not intended for sale in the ordinary course of business, and (3) are intended to be used or available by the entity."

9.F Cost Recognition

In general, most costs incurred after the concept development stage (e.g., feasibility study completed, if required) that are required to bring an asset to its required form and location are considered part of the asset's value. Although these concept development and/or feasibility study costs are not capitalized as part of the asset costs, most other costs are capitalized. However, in many large CG projects there are support type costs incurred after the asset has been placed "in Service/Accepted." These costs incurred after the asset has been accepted may be exactly the same in form and function as Project costs incurred before the asset is accepted (e.g., parts used to assemble the asset versus parts used to support operations after a CG asset has been "accepted"). These support costs will be expensed in accordance with the below "cost treatment matrix" if they are incurred after the asset is "in service/accepted."

1. APM's will review all project costs to ensure they're properly categorized and that the proper accounting treatment is applied.
2. All general PP&E shall be recorded at cost. The cost shall include all costs incurred to bring the PP&E to a form and location suitable for its intended use. These cost may include:
    a. Amounts paid to vendors
    b. Transportation charge to the point of initial use
    c. Handling and storage costs
    d. Labor and other direct or indirect production costs (for assets produced or constructed)
    e. Engineering, architectural, and other outside services for designs, plans, specifications, and surveys

9.F Cost Recognition (Continued)

f. Acquisition and preparation costs of buildings and other facilities
g. An appropriate share of the cost of equipment and facilities used in construction work
h. Fixed equipment and related installation costs required for activities in a building or facility
i. Direct costs of inspection, supervision, and administration of construction contracts and construction work
j. Legal and recording fees and damage claims
k. Fair value of facilities and equipment donated to the government
l. Material amounts of interest costs paid

9.G Capitalization Standards – Thresholds

Real Property

1. Capitalize the acquisition, construction, or improvement of Building, Structure, Shore, and Waterways projects with a total unit cost (per asset cost) of $200,000 or greater. All CG capitalization thresholds are applied to individual assets. For example, if two buildings are being constructed at the same location via the same vendor, and one building costs $100,000 and the second building costs $250,000, only the $250,000 building will be capitalized – the other building will be expensed. Any activity resulting in a total unit cost below that threshold will be expensed. These thresholds are summarized in the following table:

Asset Type	Cap. Threshold
Land	Capitalize All
Buildings	$200,000
Structures	$200,000

Personal Property

2. Capitalize the acquisition, construction, or improvement of personal property when the total unit cost (per asset cost) of the activity in the following categories meets the thresholds noted. All CG capitalization threshold are applied to individual assets. For example, if 11 items of Electronic Test Equipment are being procured from a vendor for a total cost of $255,000, with 10 items costing $20,000 each and one costing $55,000, only the $55,000 item will be capitalized – the other 10 items totaling $200,000 will be expensed. Any activity resulting in a total unit cost below that threshold will be expensed. These thresholds are summarized in the following table:

9.G Capitalization Standards – Thresholds
(Continued)

Asset Type	Cap. Threshold
Aircraft	$200,000
Vessels	$200,000
Electronics Systems	$200,000
Internal Use Software	$200,000
Electronics Stand Alone Equipment	$50,000
Electronics Test Equipment	$50,000
Boats	$50,000
Small Arms	$50,000
Vehicles	$50,000
Buoys	$50,000
General Purpose	$50,000
Repairable Spare Parts	Capitalize All

3. YARD (F) will ensure that capitalization thresholds are established and maintained for Yard Industrial Fund PP&E assets.

4. When different types of assets (Vessels, Small Boats, and Spare Parts) are procured from the same Vendor(s), the procurement document(s) shall clearly identify the different assets so that individual unit costs can be identified. One contract can be used as long as each asset type has its own contract line item number (CLIN) and accounting information.

5. Projects are an accumulation of a wide variety of smaller costs that are aggregated to determine if an asset meets the capitalization threshold. Some of these smaller cost items, such as feasibility studies, should not be added to the overall capitalized value of an asset.

9.G.1 Capitalization Standards – Thresholds: Cost Matrix

The following matrix identifies costs and the applicable treatments (capitalize or expense). Credit card purchases are subject to review to determine if the purchase is capitalized or expensed (ref. FINCEN SOP Chapter 12, sec. D, 9.h.12.c). If additional costs are identified that are not in this matrix, the APM shall notify CG-842.

	Type of Cost	Treatment
1.	Additions to existing assets that extend capacity/service life (e.g. improvements).	Capitalize
2.	Advance payments.	Capitalize Note 1
3.	Architecture and engineering costs (Rendering, Soil Testing, Drawings).	Capitalize
4.	Building costs (CG owned) – original costs and major improvements.	Capitalize
5.	Calibration of equipment: a) Incurred during or prior to project completion. b) Incurred after project completion; normally funded with OE Funds.	 Capitalize Expense
6.	Configuration management after a technological feasibility has been completed.	Capitalize
7.	Contractor logistics support and contractor depot logistics support after completion. Normally associated with normal maintenance, and typically funded with OE Funds.	Expense
8.	Damage claims related to the project, paid by CG to a contractor.	Capitalize
9.	Decommissioning, disposal costs (clean-up, site restoration, environmental due diligence act).	Expense Note 2
10.	Deployment readiness review (in service decision).	Capitalize

… continued on next page

9.G.1 Capitalization Standards – Thresholds: Cost Matrix
(Continued)

11.	Design (system & engineering) costs – Hardware, software, failure mode criticality analysis, maintainability/reliability program & demonstration costs. a) Before feasibility has been determined. Note: Feasibility is normally a factor only in very large, new technology projects. b) After feasibility has been determined.	Expense Capitalize
12.	Design reviews (e.g., Formal Qualification Reviews, Preliminary and Critical Design Reviews: a) Before feasibility has been determined. Note: Feasibility is normally a factor only in very large, new technology projects. b) After feasibility has been determined.	Expense Capitalize
13.	Direct costs for developing or fielding a system (e.g. Boats, Aircraft, Vessels, Electronics Systems), incurred by either CG or Contractor; after technological feasibility has been proven.	Capitalize
14.	Documentation (system) costs – incurred prior to project completion (e.g., guides, user manuals).	Capitalize
15.	Easements (land rights).	Capitalize
16.	Engineering costs (see design costs).	Capitalize
17.	Environmental impact (new construction).	Capitalize
18.	Environmental remediation costs (CG owned property): a) Underground storage tanks and asbestos removal. b) Soil removal and restoration: as part of new facility Construction. as part of cleanup after Construction/ decommissioning.	 Note 3 Capitalize Note 4 Expense Note 2
19.	Equipment costs (CG Operating lease) used to facilitate the completion of a CG project (e.g. Boats, Aircraft, Vessels, and Electronics Systems).	Capitalize
20.	Failure mode critical analysis.	See design costs

9.G.1 Capitalization Standards – Thresholds: Cost Matrix
(Continued)

21.	First articles and prototypes.	Capitalize Note 5
22.	Furniture (initial purchase as part of a project).	Capitalize Note 6
23.	General and Administrative costs: a) Internal CG G&A b) Contractor provided G&A	 Expense Capitalize
24.	Government Furnished Equipment/Material consumed as a part of the Project Cost	Capitalize
25.	Handling and storage costs. a) Prior to project completion. b) After project completion.	 Capitalize Expense
26.	Incentive fees to contractors (to reward performance goals).	Capitalize
27.	Labor costs <u>during</u> construction: a) Technical support services contract. b) Logistics support services contract. (Note: Logistic services <u>after</u> a project is completed are considered a normal maintenance activity and must be expensed.) c) Acquisition, construction and investment billets (core and project management). d) Contractor support to program offices (program management, systems engineering and testing).	 Capitalize Capitalize Capitalize Capitalize
28.	Land acquisition costs (e.g. survey, title services, appraisals, fees, razing existing structures acquired from others, environmental due diligence and purchase price).	Capitalize
29.	Legal fees incurred to bring project to its intended use (e.g. title and recordation costs).	Capitalize

… continued on next page

9.G.1 Capitalization Standards – Thresholds: Cost Matrix
(Continued)

30.	Lease payments for Equipment (e.g., PP&E used to facilitate project completion). a) Capital lease. b) Operating lease.	 Capitalize Note 7 Capitalize
31.	Lease payments for Land where CG will not receive title to the land.	Expense
32.	Leasehold improvements to non-CG owned assets (e.g. major renovations; rewire buildings; rehabilitate/enlarge piers).	Capitalize
33.	Legal fees – External (non-CG incurred legal costs to bring project to its intended use).	Capitalize
34.	Material costs: a) Contractor acquired property. b) Other contractor proved material. c) Government Furnished Material (GFM) provided the contractor.	 Capitalize Capitalize Capitalize
35.	Maintenance and repair costs.	Expense
36.	Modifications to systems or equipment that provide a new capability or extend useful life (e.g. major upgrades, “leapfrog” modifications)	Capitalize
37.	Operating materials and supplies.	Note 8
38.	Other CG owned structures (e.g. electrical systems, roads, parking lots, piers, sidewalks, sewage systems, and towers), original cost and major improvements.	Capitalize
39.	Packaging, postage and packing (contractors costs): a) Costs incurred prior to project completion. b) Costs incurred after project completion.	 Capitalize Expense
40.	Interest payments. Prompt Payment Interest	Capitalize Expense
41.	Prepayments.	Note 1

9.G.1 Capitalization Standards – Thresholds: Cost Matrix (Continued)

42.	Price adjustments (e.g. economic price adjustments, equitable price adjustments).	Capitalize
43.	Production readiness review.	Capitalize
44.	Progress payments	Capitalize Note 1
45.	Project management costs by contractor(s). Note: For CG AC&I labor costs see "Labor".	Capitalize
46.	Prototypes and first articles.	Capitalize Note 5
47.	Real estate costs incurred to place the project into operation (also see land acquisition costs).	Capitalize
48.	Renovation costs (also see buildings, equipment, and other structures and leasehold improvements).	Capitalize
49.	Rental costs: a) Equipment/storage space prior to project completion. b) Equipment/storage space after project completion.	 Capitalize Expense
50.	Repair costs (emergency repairs, routine repairs such as replacing shingles or repairing HVAC, periodic depot maintenance, Yard availability).	Expense
51.	Research and development costs.	Expense
52.	Service costs (incurred after project completion).	Expense
53.	Shipping costs for new systems (including handling and storage). a) To a point of intended use (includes fuel to move Aircraft, Boats or Vessels from contractor location to initial CG location). b) After point of intended use.	 Capitalize Expense
54.	Site construction costs (also see land acquisition costs).	Capitalize

… continued on next page

9.G.1 Capitalization Standards – Thresholds: Cost Matrix
(Continued)

55.	Site selection costs (e.g. legal, survey, design, studies). a) If site was selected for lease or purchase. b) If site was not selected for lease or purchase.	 Capitalize Expense
56.	Software costs (internally and externally produced, embedded).	Capitalize Note 9
57.	Special tools and test equipment hardware.	Capitalize
58.	System/sub-system integrity check demonstration.	Capitalize
59.	System tests (e.g. interface test, operational test and evaluation): a) Incurred prior to project completion. b) Incurred after project completion.	 Capitalize Expense
60.	Technical manuals.	Capitalize
61.	Technology refreshment of COTS components (includes product improvements or upgrades).	Capitalize Note 10
62.	Technical support services: a) Incurred prior to completion. b) Incurred after completion.	 Capitalize Expense
63.	Telecommunications: a) Initial (if an integral part of the project cost). b) Service (normal activity; not tied to completing the project).	 Capitalize Expense
64.	Test equipment: a) Procured as an embedded or required component of a system. b) Stand alone test equipment (not part of a system).	 Capitalize Capitalize as a Unique Asset. Note 11
65.	Test/Readiness review.	Capitalize
66.	Training courses and devices developed by CG or Contractor personnel – course development costs and/or construction of training devise (system/asset specific).	Capitalize as a Unique Asset

9.G.1 Capitalization Standards – Thresholds: Cost Matrix (Continued)

67.	Training courses, both refresher and follow-on training given to CG personnel	Expense
68.	Travel: a) In conjunction with inspection, supervision, and administration of construction contracts and project responsibility. b) General and administrative travel for a common or joint purpose benefiting more than one cost objective, such as travel to monitor several projects, or project costs such as CG crew relocation and travel costs incurred to relocate the crew during work on a CG Vessel. c) Continuous Travel Orders that cover, i.e., Per Diem, Lodging, Air fare, Car Rental, etc.	 Expense Note 13 Expense Expense
69.	Utilities: a) To bring the asset to its intended use (e.g. installation, site preparation). Note: utilities are normally operating expenses. b) After project completion (even if paid by AC&I funds).	 Capitalize Expense
70.	Warranties	Expense Note 12

9.G.2 Capitalization Standards – Thresholds: Notes

Note 1. Advances and progress payments made to contractors as part of a CIP project should be added to the CIP account for the asset being constructed.

Note 2. Do not capitalize costs associated with decommissioning or disposing of an asset. At the time an asset is placed in service (commissioned), estimate what environmental cleanup costs will be incurred in connection with its subsequent decommissioning or disposal. Then allocate that estimated total environmental cleanup cost proportionately over the service life of the asset, with a portion of it recognized as expense (and accrued as a liability) during each service year. Such accrual does not impact the asset's gross value or accumulated depreciation, but instead accumulates in an unfunded liability account. Non-environmental decommissioning costs must be estimated when CG Management decides to dispose of the asset, based on the type of disposal management elects.
Note: If non-environmental disposal costs cannot be easily separated

9.G.2 Capitalization Standards – Thresholds: Notes
(Continued)

from environmental costs they can be included as part of the environmental cleanup costs.

Note 3. For hazardous materials projects that clean up existing facilities and do not include equipment $50,000 or greater, expense all costs as they are incurred. If new equipment is acquired to address environmental concerns (such as scrubbers or filtration devices), account for such equipment as a new capital asset if it meets capitalization thresholds. Otherwise, expense the equipment.

Note 4. Cleanup costs may be incurred in connection with bringing a property to a form and location suitable for its intended use; therefore they are eligible for capitalization, along with other site development costs.

Note 5. Expense any costs incurred on a first article or prototype before technological feasibility has been established. After technological feasibility has been established, the subsequent costs of constructing and installing the first article are eligible for capitalization and depreciation over the useful life of the asset. If the first article is an improvement to an existing asset and does not extend the life of the existing asset, depreciate the prototype over the remaining service life of the existing asset. If the prototype extends the useful life of the existing asset, add the cost of the prototype to the existing asset and depreciate the remaining net book value, plus prototype costs over the new useful life. If the first article/prototype is not intended to be placed in operational service, but is to be used solely for testing, capitalize and depreciate it over the estimated service life of the entire program. If the system is destroyed during testing, write off the asset at that time.

Note 6. Furniture will be capitalized if it is built into or attached to the project asset and would damage the asset if removed. If individual pieces of non-attached furniture meet capitalization thresholds, then they must be capitalized and not listed as part of the project cost. If individual pieces of non-attached furniture do not meet the capitalization threshold for GPP then they must be expensed.

Note 7. Capital lease assets are capitalized upon a determination that the lease meets the capital lease criteria of SFFAS No. 6.

Note 8. Beginning in FY 2004, the CG changed its method of accounting for repairable spare parts. Prior to FY 2004, these items were removed from the project costs and valued at historical cost in either the Vessel's or Inventory Control Point's records. Starting with new Cutter Classes delivered after FY 2003, the CG is capitalizing repairable spare parts as part of the asset cost if they were purchased as

9.G.2 Capitalization Standards – Thresholds: Notes
(Continued)

part of the overall project and depreciated using the same economic service life as the base asset they support (e.g. 378' cutter).

Note 9. Software embedded in a system is part of the system's total cost. Other software costs (both internally and externally incurred), procured independently of the hardware on which it is resident, may be a capitalizable cost. Examples of capitalizable costs are the costs to purchase or develop software, including design, coding, testing, installation, and any enhancements to existing software that result in developmental costs that are not eligible for capitalization, including evaluation of alternatives, data conversion costs, costs incurred after final acceptance, software maintenance, or enhancements that merely correct a design flaw or extend the useful life of the software.

Note 10. If the original asset was recorded as line-item accountable, delete the old record and record the replacement component as a new detail property record. Capitalize it if it meets the capitalization criteria. If the original asset was recorded as a system, determine whether the replacement component provides a new capability (not previously included), or extends the service life of the asset. If it does, capitalize it as an improvement if it meets the capitalization criteria; if it does not, expense it.

Note 11. If stand-alone test equipment (test equipment not part of a system) meets the capitalization criteria, add it to the fixed asset system; if does not, expense it.

Note 12. If the CG purchases an extended warranty, record it as an expense at the time the invoice is paid.

Note 13. CG has determined that travel orders will be expensed since they do not meet the definition of direct costs. SFFAS No. 4 indicates that direct costs are costs that can be specifically identified with an output, and SFFAS No. 6 calls for capitalization of the "direct costs of inspection, supervision, and administrative of construction contracts." Since CG travel orders cannot be directly linked to a specific asset, they will be expensed.

9.G.3 Capitalization Standards – Improvements

1. Improvements that meet the capitalization threshold for the same asset class (e.g., Aircraft improvement of $200,000 or more, Boat improvement of $50,000 or more) shall be capitalized. Improvements that result from projects that either enlarge a base asset's capacity or improve its capability shall be capitalized and depreciated over the remaining useful life of the base asset. If the improvement project extended the life of the base asset, the value of the improvement shall be added to the base asset's remaining Net Book Value and depreciated over the "new" useful life of the base asset.
2. Aircraft periodic depot maintenance and Vessel maintenance, availabilities and rehabilitations are considered maintenance activities that will facilitate the asset meeting its intended service life. These types of maintenance activities and their related costs shall be expensed.
3. HQ Program manager APM's shall identify first Article and prototype assets in their project delivery and cost schedules. A first article or prototype represents the first unit constructed for a class of assets or systems. The cost of a first article may be higher than subsequent units because of the need for extensive planning and design to construct the assets or systems. While the costs incurred for their production may be higher than those incurred for later produced assets of the same or similar type, these actual costs represent the true historical costs of placing the asset in service and therefore are capitalized as that unit's historical cost. Excessive cost of the first article is not to be pro-rated across all similar assets.
4. Expense any costs incurred on a first article or prototype before technological feasibility has been established. After technological feasibility is established, the subsequent costs of constructing and installing a first article are eligible for capitalization and depreciation.
5. Some first articles or prototypes are not intended to be placed in operational service. Instead, they are intended to be used solely for testing (both initial and recurring testing throughout the asset's life). If the first article is to be used strictly for testing, capitalize and depreciate the asset over the estimated project delivery schedule for all of the project's follow-on assets. If the delivery schedule changes, the change in useful life for the prototype asset will be treated as a change in estimate and modified prospectively.

9.G.3 Capitalization Standards – Improvements (Continued)

6. If a prototype is destroyed during testing, expense the asset within 30 days of destruction and treat any remaining net book value as a loss.

9.H Costing Methodology

CG will use one or more of the following methods for establishing the full costs for CG assets. These methods are listed in order of preference:

1. Directly tracing costs wherever economically feasible
2. Assigning costs on a cause-and-effect basis
3. Allocating costs on a reasonable and consistent basis

In general there are two types of costs, direct and indirect, that must be included, on an accrual basis, in the full cost of an asset.

9.H.1 Costing Methodology – Direct Costs

1. Direct costs are those that can be specifically identified with an output (asset) and do not require any type of assignment or allocation to drive the cost to an asset. All direct costs shall be included in the full cost of assets. Typical examples of direct costs are:
    a. Salaries and other benefits for employees who work directly on the project.
    b. Materials and supplies used in the work.
    c. Various costs associated with office space, equipment, facilities, and utilities, that are used exclusively to produce the asset.
    d. Costs of goods and services received from other segments or entities that are used to produce the asset.
2. In most cases, the CG does not receive cost information from vendors that is directly traceable to an individual asset; however, several CG activities (ELC and AR&SC) that perform project work can directly trace raw materials and labor to a specific asset or improvement via their work order/project accounting systems. Some direct costs can be assigned to an asset via information provided by the Contractor's accounting system. For example, the CG can assign the cost to a discrete asset using the DD-250 or DHS Form 700-21 or invoice document that specifically identifies a portion of a contract cost to a specific asset procured via the contract.

9.H.1 Costing Methodology – Direct Costs (Continued)

3. Some direct costs can be assigned to a specific asset based on the terms of a fixed price or similar type of contract vehicle, including a Military Interdepartmental Procurement Request (MIPR). For example, the CG issues a MIPR to perform sea trials on four CG CIP assets at an agreed upon price of $100,000 each. When the Navy bills for this service, it may not itemize or separately identify the costs associated with each of the four vessels. Therefore, the CG will allocate the agreed upon estimated cost per vessel, unless better information is provided by the Navy/contractor.

9.H.2 Costing Methodology – Indirect Costs

1. Indirect costs are costs that are jointly or commonly used to produce two or more types of outputs (assets), but are not specifically identifiable with any of the assets. Indirect costs are normally allocated to an asset or an indirect cost pool based on a ratio (expressed as a percentage) of the indirect costs to a direct cost base. For example, Deepwater program utilizes Program Management (PM), and Systems, Integration, and Testing (SEIT) contractors to provide PM and SEIT services for all of the projects managed by the DW program (National Security Cutter, Fast Response Cutter, Short Range Prosecutor, 123' Patrol Boat). These support services are not specifically identified to a specific project or asset, but are available to each project on an as needed basis. Therefore, each of these projects must be allocated a portion of these general support activities based on the percentage of each project to the total of all projects utilizing these common services or support functions. These costs are distributed to cost pools for each project (e.g., NSC), and as specific assets are delivered within a project, each asset is burdened with a portion of this general indirect cost based on a dollar cost average of the specific asset to the total (expected) cost of all assets.
2. Another type of CG indirect cost is AC&I labor costs which pay for the CG personnel who provide project oversight and support services (AC&I Project and Core billets). In order to ensure that AC&I labor is adequately allocated to all AC&I funded projects, a CG-wide AC&I Labor rate is developed each year for the annual AC&I appropriation by FINCEN-FR.
3. Typical examples of indirect costs/cost pools are:
   a. General administrative services (AC&I Core billets).
   b. Security.
   c. Rent.
   d. Employee health costs.

9.H.2 Costing Methodology – Indirect Costs (Continued)

e. Operating and maintenance costs for buildings, equipment and utilities.
f. Program/project management services.
g. System integration and testing.
h. Technical manuals.

9.H.3 Costing Methodology – Indirect Rates and Estimates

1. Indirect cost rates, except for AC&I Labor, and all project estimates must be developed by the PM and the F/RM for each CIP project and approved by CG-842 for the proper allocation of project indirect costs, and overhead costs.
2. HQ Program Offices shall review all rates and estimates on a quarterly basis and provide FINCEN-FR and CG-842 the results of the analysis within 5 work days after the end of the quarter. CG-842 shall approve these rates within 5 work days of receiving the program's rate analysis, and provide copies of these approved rates to the PM and FINCEN-FR.
3. Approved rate changes from the quarterly review of rates and estimates shall be applied prospectively to new assets.

9.H.4 Costing Methodology – Expense Costs

1. Costs that do not meet the requirement for capitalization shall be expensed in the accounting period in which they are incurred.
2. Costs that are identified as non-capitalizable in nature shall be expensed and removed from the CIP account as soon as they are identified, without waiting for asset delivery, project completion, or closeout. Failure to expense costs in a timely manner will result in operating expenses being charged against the wrong accounting period, and will inflate the value of CIP.
3. If the expected per-asset cost does not meet CG capitalization thresholds, the entire project should be reported to FINCEN-FR as an expense project and removed from the CIP account.
4. A comprehensive list of expense costs is identified in the Cost Treatment Matrix.

9.I Project Establishment

1. The accurate and complete establishment of CIP projects is essential to the timely, accurate relief of CIP accounts as well as the creation of assets on the CG's financial statements. In order to ensure that all aspects of a CIP project are examined, the PM shall convene a project initiation team meeting composed of, at a minimum, the project's APM, F/RM, Contracting representative, CG-842 Analyst, CG-831, and FINCEN FR representative.
2. During this initial meeting, a project establishment package shall be prepared that identifies the following items (explained in detail in the following sections):
   a. The type(s) of assets that the project will deliver.
   b. A separate six-digit program element shall be established for the direct cost associated with each type/class of asset (effective 10/1/05 for new projects).
   c. A separate six-digit program element shall be established for the indirect costs associated with each type/class of asset, other than AC&I labor which has a yearly allocation rate for all AC&I expenditures (effective 10/1/05 for new projects).
   d. The estimated delivery schedule for all assets that the project will deliver.
   e. The acceptance criteria for all assets the project will deliver.
   f. The costing methodologies needed for the project.
   g. The type and source of valuation documentation the project will provide.
   h. Project points of contact for PM, APM, F/RM, CG-842 Analyst, FINCEN FR Representative, etc.
3. HQ Program office and/or the APM's shall ensure that a project establishment package is prepared addressing the requirements in the following sections and submitted to CG-842/FINCEN for review and approval within 30 days of receipt of the CIP project funding.
4. CG-842 and FINCEN shall review the project establishment package and work out any addition or missing details with the program office. The package shall be approved in writing by CG-842, and a copy shall be distributed to the HQ program office and FINCEN-FR within 30 days of receipt.
5. HQ Programs shall ensure that funding levels, funding transfers, and the subsequent assignment of those funding levels to CIP projects is consistent with asset types (e.g., National Security Cutter, 123' Patrol Boat) and cost types (e.g., Direct or Indirect) to ensure proper classification and traceability of funds.

9.I Project Establishment (Continued)

6. A separate six digit program element shall be established for the direct cost associated with each type/class of asset.
7. A separate six digit program element shall be established for the indirect costs associated with each type/class of asset (other than AC&I labor which has a yearly allocation rate for all AC&I expenditures).
8. HQ programs shall ensure that estimates and rates for cost allocation are reviewed and updated when funding-level changes occur.
9. FINCEN-FR shall work with HQ programs (CG-83, APM's) to ensure that CIP project numbers are created in a manner that will accurately reflect the CIP account. For example, AC&I funding that is received for the construction of a new vessel and a new pier, or pier improvements, will be initialized under two CIP project numbers.
10. HQ Programs shall establish a delivery schedule of discrete assets that will include the month/year the estimated delivery is expected.
11. The delivery schedule shall be part of the project package and shall be reviewed at the time an asset is delivered, or at a minimum, on a quarterly basis as part of the quarterly review process.
12. All constructed general PP&E shall be recorded and shall remain in CIP until the asset is brought to a form and location suitable for its intended use. All general PP&E shall be recorded at historical cost.
13. HQ APM shall ensure that the direct and indirect costing methodologies are established for all assets that will be delivered as part of the project. The costing methodology will ensure that all project costs are accounted for, including those that will not be capitalized (e.g., expensed). If AC&I labor will be included, the PM must ensure that the proper labor rate(s) are applied as addressed below.
14. The application of AC&I labor to AC&I projects is accomplished in the following manner:
    a. G-A identifies all direct and support billets for G-A, G-D, and CG-4 projects identified on the CG Planned Allowance List (PAL), and a cost is developed based on the Standard Personnel Cost (SPC) for each billet based on salary only. In addition, all indirect billets are also identified and similarly priced.
    b. An adjustment is made to the developed cost of SPC times the number of billets, to ensure that the developed cost do not exceed the AC&I labor budget.

9.I Project Establishment (Continued)

c. Next, an overhead rate is developed to apply the overhead of indirect AC&I billets to the identified G-A, G-D, and CG-4 billets. At this point all AC&I labor are broken into three groups; G-A, G-D, and CG-4.

d. Next, the major projects that have identified billets are priced using the billet cost for direct project billets plus their associated overhead. This process is used for major projects.

15. For major projects, the billets used to support the projects are priced out for the current FY without regard to proposed project budget or planned amount.

16. Major projects have a projected list of billets that are directly identified to the project, and the labor costs are predicated on those specific billets plus an appropriate share of the overhead labor cost. Since labor is applied based on billets, a new CIP project could have AC&I labor costs and zero construction expenditures.

    a. For Real Property projects there is an identifiable billet structure, but these billets are used to manage projects of four different types of Real Property projects: Major discrete projects, Public Family Housing, Waterways, and Minor projects.

    b. To distribute labor to these four different types of projects, first the Real Property billets are priced out as above and then broken into four cost pools based on the FY AC&I budgets for the four Real Property groups of Major discrete projects, Public Family Housing, Waterways, and Minor projects.

    c. The cost pool associated with Major projects is distributed to specific projects based on an individual project's FY budget, divided by the total of all these FY Major Project budgets. This ratio is then multiplied by the Major project labor cost pool to determine the individual project labor cost. Since these projects have discrete yearly budgets, their specific percentage of the labor cost pool can be readily determined ahead of time, and the entire yearly labor is distributed to these projects before any other expenditures are incurred. This can result in a CIP project that is in the planning stages, with zero construction costs, being burdened with AC&I labor. This is appropriate, since the CG labor is associated with the planning, monitoring, design, and construction. It is therefore reasonable to assume that most CG labor is associated with the planning, monitoring, and design. Once the yearly AC&I labor allocation is added to the project, no additional AC&I labor

9.I Project Establishment (Continued)

is added to this project as construction expenditures are incurred. Additional AC&I labor is only added to the project if subsequent FY AC&I funding is authorized. In other words, the FY labor is applied based on the budget for FY99, and no additional labor will be applied unless it receives additional FY funding. If this happens, then the same process would be used to apply a portion of the additional FY AC&I labor to this project.

17. Individual projects within the Public Family Housing, Waterways, and Minor project categories do not have discrete yearly budgets. Therefore, to apply labor to individual projects within these groups, a rate is developed. This rate is created for each of these cost pools by taking, for example, the FY AC&I Waterway's labor cost pool, divided by the FY AC&I budget for Waterways.
18. This rate is then multiplied by the individual project expenditures. An example is the Barnegat Inlet Waterways project. In this specific example, the FY 98 Waterways labor pool cost was $903,560, and the FY 98 Waterways budget was $5,000,000. Therefore, for each dollar expended on the Barnegat Inlet project, $.18 of labor cost was allocated. Since no labor is applied until costs are incurred, the unapplied labor must be carried forward as a separate CIP account until all expenditures of FY98 money are recorded. This requires that the project expenditures for these projects be identified by FY, so that the project expenditures for a given year can be burdened by the appropriate rate. It also requires that these projects be updated at year-end or upon completion to reduce the amount of unapplied labor to a minimum.
19. The cost of any GFE/GFM consumed in the construction or manufacturing process shall be added to the CIP project as a cost and capitalized.
20. The cost of any GFE/GFM returned to the CG shall not be capitalized.
21. HQ Program APM's shall ensure that all GFE/GFM costs are tracked and supported.
22. HQ Program offices shall ensure that all issued contracts contain the required specificity, so that direct and indirect costs, as well as the type of assets, can be identified for costing purposes. For example, a contract that is issued for both the construction of a new cutter and the improvement of an existing cutter should be issued under two separate contract line items, with separate accounting data, in order to provide clear traceability of costs to each asset.

9.J Project Execution

1. HQ Program managers shall ensure that contracts, contract modifications, and miscellaneous obligation documents are issued timely and cite the proper program element, so that costs, to the greatest extent possible, can be traced to assets.
2. HQ Program APM's shall review CIP expenditure costs to ensure that they are correct, and validate that they can be supported by third party evidential documentation (e.g. invoices, if possible).
3. CG-842 and HQ Program offices shall review CIP projects on a quarterly basis to ensure that all schedules, assumptions, estimates, and rates used for the burdening of assets are correct and up to date.
4. This review will be documented, and a copy will be given to FINCEN-FR for the CG project folder.

9.K Execution Reports

1. FINCEN-FR shall ensure that the appropriate CIP financial reports are distributed to HQ Program Offices on a monthly basis:
    a. AC&I/OE Master Report
    b. Cancelled Appropriation Report
    c. CIP APM Listing Report
    d. CIP Master Report
2. HQ Program Offices shall review these reports on a monthly basis to ensure their accuracy, and will report errors to FINCEN-FR.
3. FINCEN-FR shall provide a detailed listing of CIP expenditure costs to HQ Program APM's on an as-requested basis.
4. HQ Program Offices shall report all delivered and accepted assets to FINCEN-FR using the PMDS reporting process contained in 9.N.1.

9.L Execution Reviews

1. To minimize retrospective cost adjustments to previously delivered assets, HQ Program office and/or APM's shall review CIP projects when changes occur to determine if updated estimates and rates are needed to ensure that cost changes are made to assets on a prospective basis. This will be accomplished within 30 days of the change. The following areas can affect rates and estimates used in the valuation of assets:
    a. Funding levels (e.g. initial, transfers)
    b. Delivery schedules (e.g. number and types of assets)
    c. Indirect cost allocation rates

9.L Execution Reviews (Continued)

d. Change in direct/indirect costs
e. AC&I overhead allocation rates

2. HQ Program office and /or APM's shall perform a review of all CIP projects as assets are delivered, or at a minimum on a monthly basis, to ensure that rates and estimates used in the valuation of assets are accurate, and that all changes that occurred in that fiscal quarter were accounted for.
3. The APMs shall review their projects' expenditures on a monthly basis to determine if all expenditures are appropriate to capitalize.
4. CG-842 shall ensure that all CIP projects are reviewed on a quarterly basis, and provide assistance when needed.
5. CG-842 in conjunction with FINCEN-FR shall review and approve all changes in rates and estimates that reflect asset cost changes in the HQ Program office and/or APM project packages.
6. CG-842 shall ensure project packages are reviewed, and a copy shall be distributed to the HQ program office and FINCEN-FR within 30 days of receipt.

9.M Receipt of Assets

Assets shall be receipted in a timely fashion, so that HQ Program managers APM's can review and capitalize them within 30 days from delivery and acceptance.

9.M.1 Receipt of Assets – Full and Complete

1. Full and complete assets are those that meet the CG's initial project requirements.
2. HQ Program managers shall maintain projects and their associated costs to ensure that full and complete receipts of assets are accurately reflected in reports, and have undergone full review to ensure accuracy.
3. HQ Program managers shall ensure that all costs for assets that are considered full and complete (capitalized assets) shall be included in the PMDS report package and accurately interfaced (moved from CIP to Capital Assets) by FINCEN-FR on the following month's CIP Master Report and in the CG's Fixed Asset records.

9.M.2 Receipt of Assets – Less than Full and Complete

1. Less than full and complete assets are those that are not in a state to provide the anticipated service the asset intended. These assets should be analyzed to ensure that incremental capability (i.e., an early version) cannot be accepted.
2. Assets that are received, but less than full and complete, are still CIP assets that have not been delivered and accepted. Those costs that are less than full and complete shall be accurately reflected as expenditures in CIP and AC&I reports.
3. HQ Program managers shall ensure that all less than full and complete costs are reviewed on monthly basis to ensure that any costs that are attributable to expense actions are removed or expensed from CIP accounts.

9.M.3 Receipt of Assets – Follow-on Costs

1. Occasionally, construction contracts will incur costs not reflected in the CIP expenditures total when the asset is delivered and accepted as full and complete. These costs normally occur at the completion of a project.
2. Upon receipt of interim and final project asset(s), the HQ Program office APM's shall review and validate outstanding undelivered orders to ensure that they are associated with project assets that have been delivered/accepted.
3. If the cost difference is less than 10% of the value assigned to the last asset, the difference shall be added to (or subtracted from) the last asset.
4. If the cost difference is 10% or greater than the value assigned to the last asset, the difference shall be equally allocated to all assets previously delivered.
5. Most follow-on costs are merely price adjustments to the project's value and will be added to project assets as described above. However, some follow-on costs (e.g., engineering change proposals) are changes directed at specific assets within the project and do not affect all assets uniformly. These ECP and ECP-like costs must be examined by the PM, and a determination made as to impact of the ECP on affected assets.

9.M.4 Receipt of Assets – Documentation

1. "Third Party" documentation such as contractor sign-offs (releases), final invoices, DD-250 (acceptance and/or receiving report), or DHS Form 700-21 received from the contractor are the preferred type of documentation to support valuation. In certain instances, non third party documents (e.g. Military Messages; internal CG Memoranda that document the results of CG conducted tests, Test Plan results) will suffice as support for in-service dates.
2. HQ Program manager APM's shall ensure that accurate and complete documentation is obtained and forwarded to FINCEN-FR to support the valuation and in-service dates of all capitalized assets.
3. To the maximum extent possible, the HQ Program manager APM's shall ensure that the following types of third party documents are obtained to support the valuation and in-service dates:

Category	**In-service Date supported by:**
Real Property	
Land	Deed – Title recording date
Buildings	Cert of Occupancy date; Title recording date; CG memo date
Structures	CEU message date; CG memo date
Personal Property	
Aircraft	DD-250/CG 41 acceptance date or DHS Form 700-21
Vessels	DD-250/ CG-45 acceptance date or DHS Form 700-21
Boats	DD-250 acceptance date or DHS Form 700-21
Electronics Systems	CG message/memo date
Software	CG message/memo date
Vehicles	Title issue date/DD-1149 date or DHS Form 700-21
General Purpose	OF-347 acceptance, or DD-250 acceptance date or DHS Form 700-21

4. If none of these documents can be obtained, the HQ Program manager APM shall contact CG-842 for further guidance.

9.N Capitalization of Assets

This section addresses the following topics:

- Project Management Data Sheet (PMDS)
- Service Life of Assets
- Capital and Operating Leases

9.N.1 Project Management Data Sheet (PMDS)

1. HQ Program manager APM's shall summarize all applicable project costs on Project Management Data Sheet (PMDS) submission packages.
2. PMDS packages will contain at minimum the following information regarding a project:
    a. Project number
    b. A brief Project description
    c. Project Direct and Indirect program elements
    d. Project contract numbers
    e. Asset delivery schedules
    f. Asset acceptance criteria
3. APM's shall identify costs in PMDS submissions so that CIP expenditure values in project/program elements can be relieved by FINCEN-FR.
4. APM's shall ensure that all costs in PMDS submission packages shall be supported by third-party documentation to the maximum extent possible.
5. HQ APM's or HQ Program manager shall ensure that all PMDS submission packages are forwarded to CG-842 for review and approval within 20 days after delivery and acceptance of the asset.
6. CG-842 and FINCEN-FR will jointly review packages for completeness and correctness within 5 days of receipt.
7. PMDS submission packages that do not contain fully supported costs will be returned to the APM or HQ Program manager by CG-842 with corrective action instructions and dates.
8. APM's or HQ Program manager shall ensure that corrective actions are carried out within the timeframes identified.
9. Re-submissions shall follow the same procedures as first submissions.
10. FINCEN-FR shall record assets within 5 days after joint review and acceptance with CG-842.
11. FINCEN-FR will provide the HQ Program manager and/or APM's with a copy of PMDS submission packages where FINCEN-FR applied indirect costs.

9.N.1 Project Management Data Sheet (PMDS)
(Continued)

12. HQ Program manager APM's shall ensure that assets are recorded timely and accurately in the CG's designated fixed asset system.
13. FINCEN-FR shall interface assets from CIP identifying specific expenditures whenever the DD-250 or invoice documents (in PMDS submission package) cite contracts and respective contract line items.
14. All other costs shall be interfaced using approved CG allocation methodologies specifically identified for the project/asset being interfaced.
15. HQ Program manager APM's shall ensure all required actions are taken so that assets can be recorded in the CG's designated fixed asset system within 30 days after delivery/acceptance.
16. It is imperative that accurate in-service dates be established in fixed asset systems supported by complete documentation as addressed in the table above.
17. Acceptance criteria shall be established as part of the project set-up process. These criteria can be supported by third party documentation such as titles, DD-250's, DHS Form 700-21, Release Forms, etc, or CG documentation based on testing criteria.

9.N.2. Service Life of Assets

1. HQ Program manager APM's, in conjunction with CG-842 and FINCEN (FR), shall ensure that service lives are established and fully supported for new assets prior to delivery and acceptance of the asset.
2. HQ Program managers and FINCEN shall maintain the supporting documentation throughout the service life of the asset.
3. All capitalized real and personal property assets (excluding Yard fund assets for which separate policy applies) will have initial service lives in accordance with this section using the straight-line depreciation method with no salvage value (except Land).
4. The Coast Guard evaluates its service life estimates and assumptions on a periodic basis and, when warranted, adjusts these estimates and assumptions. Adjustments are accounted for on a prospective basis through depreciation expense, as required by GAAP. Evaluations impacting service lives issued by HQ program offices shall be evaluated by CG-842. These evaluations shall be reviewed and approved, and policy can be updated. Additionally, evaluation shall be forwarded to FINCEN so that prospective changes to policy and service lives

of assets can be made.

9.N.2.a Service Life of Real Property

1. Land is not depreciated.
2. Buildings and Structures are depreciated over the useful life of the asset using the straight-line method with no salvage value.
3. Changes in service lives resulting from improvements shall be determined by Commandant (CG-43) and reported to Commandant (CG-84) and FINCEN (FR) with appropriate capitalization documentation when the improvement is completed.

Service Life of Real Property		
Type	**Service Life**	**Effective Date**
Land	Indefinite	Pre95 – Post94
Buildings	40 years	Pre95 – Post94
Structures	20 years	Pre95 – Post94

9.N.2.b Service Life of Aircraft

1. The service life of Aircraft shall be established by Commandant CG-41 and reported to Commandant CG-84. Factors used to establish service lives are, but not limited to, the Coast Guard maintenance program, changes in utilization of aircraft (e.g. flight hours or cycles), and environmental factors (e.g. where the aircraft will be used), and/or experience by other government and non-government activities operating “like” aircraft.
2. Changes in service lives resulting from improvements shall be determined by Commandant (CG-41) and reported to Commandant (CG-84) and FINCEN (FR) at the time the aircraft improvement is completed.
3. The service lives of Aircraft, based on date in service, are as follows:

Service Life of Aircraft		
Type	**Service Life**	**Effective Date**
HC-130	35 years	Oct-2004
HH-60	30 years	Oct-2004
HH-65	30 years	Oct-2004
C-37A	20 years	Oct-2004
HU-25	27 years	Oct-2004

9.N.2.c Service Life of Vessels

1. The service lives of Vessels shall be determined by Commandant (CG-45) and reflected in the related Operational Requirements Document (ORD). The identified service life of a specific class will remain in effect until changed by an approved "Ship Structure and Machinery Evaluation Board" (SSMEB). The SSMEB review will normally occur 10 years after commissioning of the lead ship of the class, and at five year intervals thereafter. Earlier evaluations may occur for certain cutters due to design, service, or other considerations.
2. Changes in service lives resulting from improvements shall be determined by Commandant (CG-45) and reported to Commandant (CG-84) and FINCEN (FR) at the time the vessel improvement is completed.
3. The service lives of vessels are as follows:

Service Life of Vessels		
Type	**Service Life**	**Effective Date**
WAGB-400	34 years	Aug-2004
WAGB-420	30 years	Aug-2004
WHEC-378	43 years	Aug-2004
WMEC-282	16.5 years	Aug-2004
WMEC-270	30 years	Aug-2004
WMEC-210	45 years	Aug-2004
WLB-225	30 years	Aug-2004
WPB-123	15 years	Aug-2004
WPB-110	25 years	Aug-2004
WPB-87	25 years	Aug-2004
WTGB-140	22 years	Aug-2004
WLIC	30 years	Aug-2004
WLM	30 years	Aug-2004
WLR-75 (F Class)	30 years	Aug-2004

9.N.2.d Service Life of Boats

1. The service lives of Boats shall be determined by Commandant (CG-45) and reflected in the related operational requirements document (ORD), or similar documentation. The identified service life of a specific class will remain in effect until changed by an approved "Ship Structure and Machinery Evaluation Board" (SSMEB). The SSMEB review will normally occur at five year intervals. Earlier evaluations may occur for certain

9.N.2.d Service Life of Boats (Continued)

boats due to design, service, or other considerations.

2. In the absence of an ORD or SSMEB, Commandant (CG-45) analysis dictates the initial service lives as follows:

Assignment	Fiberglass Hull	Aluminum Hull
Cutter Boats	5 Years	10 Years
Shore Based Boats	8 Years	12 Years

3. Changes in service lives resulting from improvements shall be determined by Commandant G-SEN and reported to Commandant CG-842 at the time the boat improvement is completed.

Service Life of Boats (in years)
FG = fiberglass; AL = Aluminum or similar metal

BOAT CLASS	SSMEB	SHORE BOATS (FG)	SHORE BOATS (AL)	CUTTER BOATS (FG)	CUTTER BOATS (AL)	EFF DT
ANB 55	20					MAY-04
ANB 64			30			MAY-04
ANB (382001)			12			MAY-04
BUSL	25					MAY-04
TANB (SHORE)			12			MAY-04
ASB					10	MAY-04
CB-L				5	10	MAY-04
CB-M				5	10	MAY-04
CB-S				5		MAY-04
CB (OTHER)				5		MAY-04
LCVP					10	MAY-04
MSB	20					MAY-04
MLB	25					MAY-04
SPC (HWX)			12			MAY-04
RB-(S)(HS)			12			MAY-04
SPC (SW)			12			MAY-04
PWB		8	12			MAY-04
SKF			12			MAY-04
SPC (234448)		8				MAY-04
SPC (LE)		8	12			MAY-04
SPC (SURF)		8				MAY-04
TPSB	10					MAY-04
UTL		8	12	5	10	MAY-04
UTM		8	12			MAY-04

9.N.2.e Service Life of Electronics, Software, and Other Property

The useful lives of electronics, software, and all other personal property categories are as follows:

Category	Service Life	Effective Date
Electronics	8 years	Oct-1995
Internal Use Software	3 years	Oct-1995
All Others	5 years	Oct-1995

9.N.3 Capital and Operating Leases

A lease is a contract granting use of real or personal property during a specified period in exchange for rent. Leases are classified as either capital or operating.

If real or personal property is leased between two Federal agencies, the program office shall sign a Memorandum of Agreement (MOA) with the other agency and determine if a lease-type arrangement actually exists.

9.N.3.a Capital and Operating Leases – Identifying Criteria

Capital leases are leases that transfer substantially all the benefits and risks of ownership to the lessee. If, at its inception, a lease meets one or more of the following four criteria, the lease shall be classified as a capital lease. Otherwise, it shall be classified as an operating lease (per SFFAS #6, Accounting for Property, Plant and Equipment, para 20). This criterion applies to leases for both real and personal property. For budgetary purposes, OMB A-11 provides additional criteria to determine if a lease is operating or capital. These additional criteria do not apply to Financial Statement reporting.

1. The lease transfers ownership of the property to the lessee by the end of the lease term;
2. The lease contains an option to purchase the leased property at a bargain price;
3. The term of the lease is equal to or greater than 75 percent of the estimated economic life of the leased property; or
4. The present value of rental and other minimum lease payments, excluding that portion of payments representing executory cost (such as insurance, maintenance, and taxes incurred for leased property), equals or exceeds 90% of the fair market value of the leased property at the beginning of the base term.

The last two criteria are not applicable when the beginning of the lease term falls within the last 25 percent of the total estimated economic life of the leased property.

9.N.3.a Capital and Operating Leases – Identifying Criteria (Continued)

Each program office or operating unit with any leases must evaluate each lease against the above criteria and within 30 days of requesting funding or signing the lease, whichever is earlier, make a determination as to whether it is an operating lease or a capital lease.

Documentation to support the determination must be maintained in accordance with Coast Guard Paperwork Management Manual, COMDTINST M5212.12 (series) and the December 1998 General Records Schedule.

For capital leases, a copy of the lease and all supporting documents and analyses shall be sent to the FINCEN within 60 days of requesting funding or signing the lease, whichever is earlier. The FINCEN shall make final determination as to whether a lease is capital or not.

9.N.3.b Capital and Operating Leases – Accounting

The FINCEN shall record the capital lease in the CG's fixed asset accounting system. The FINCEN shall value and amortize the capital lease IAW FASAB policy including the discount rate to be used and the allocation of the payment between the obligation and interest expense as provided in SFFAS No 5 and 6. The CG will amortize the capital lease of assets, other than land, over the shorter of the useful life of the asset or the lease term.

An operating lease is any lease that is not a capital lease.

Program offices shall expense all operating leases except for those involving CIP.

Leaseholds are rights to the use of land, buildings, or other property. Leasehold improvements are improvements to either capital or operating leases made by the lessee.

Leasehold improvements that meet the CG's capitalization criteria for the same type of asset shall be capitalized. Leasehold improvements paid in advance shall be classified as capital expenditures. Leaseholds and leasehold improvements shall be amortized over the life of the lease or over the estimated useful life of the improvement, whichever is shorter. Leasehold improvements that do not meet the capitalization criteria shall be expensed.

Documentation to support the cost of the leasehold improvement shall be maintained in accordance with Coast Guard Paperwork Management Manual, COMDTINST M5212.12 (series) and the December 1998 General Records Schedule. HQ Directorates and operating units shall

9.N.3.b Capital and Operating Leases – Accounting (Continued)

provide documentation to support the total cost and terms of capital leases to the FINCEN. This supporting documentation must include contracts, invoices and terms of the lease.

The FINCEN shall record the value of the leasehold improvement in the CG's fixed asset accounting system. The FINCEN shall value the leasehold improvement IAW FRMM policy. The FINCEN shall amortize all capital leases over the shorter of the useful life of the improvement or the lease term.

The FINCEN shall report the value of leasehold improvements in the CG's financial statements in accordance with GAAP.

The use of leases to assist in the construction and assembly of CIP assets is a common occurrence. These leases can be either operating or capital based on the criterion addressed above.

Operating leases used for CIP projects shall be charged to the correct CIP project and capitalized as part of the end product value.

The cost of operating leases for equipment used for several projects or non construction projects should be prorated so that only that portion applicable to a CIP project is charged to that project. These leases may involve assets used completely in the construction or only partially used in construction.

Capital leases paid for within a CIP project are for leases that meet the capital lease criteria addressed above and shall be capitalized as separately identified assets and will not be included as a part of the capitalized cost of the CIP assets.

9.O Asset Identification

1. Asset identification provides for better tracking and control.
2. FINCEN (FR) shall ensure that all assets are entered into the designated fixed asset system using the following structure:

Category	Serial No. Field	Tag No. Field
Land	Installation No.	OPFAC; Site No; RPFN
Buildings	Installation No.	OPFAC; Site No; RPFN
Structures	Installation No.	OPFAC; Site No; RPFN
Aircraft	Airframe No.	Tail No.
Vessels	Hull No.	Hull No.
Boats	HIN No.	Hull No.
Electronics Systems	N/A	System Generated No.
Electronics Equipment	Serial No.	System Generated No.
Software	N/A	System Generated No.
Vehicles	VIN No.	License Plate No.
General Purpose	Serial No.	System Generated No.

9.P AC&I Project Closeout

1. This phase begins upon delivery and acceptance of the last asset to be delivered.
2. Within 15 days of delivery:
   a) The HQ Program Manager shall identify the actual “in service” date in accordance with the FRMM.
   b) For “full and complete” assets, the HQ Program Manager shall develop the PMDS package for the asset.
   c) For “less than full and complete” assets:
      1) The HQ Program Manager will analyze the asset to insure incremental delivery is/is not possible.
      2) The HQ Program Manager will repeat this analysis monthly until the asset is fully accepted.
3. Prepare PMDS documentation (follow the PMDS Preparation Process for details);
   a) The HQ Program Manager shall utilize “third party” documents as basis of valuation.

9.P
AC&I Project Closeout
(Continued)

b) If "third party" documentation cannot be acquired, the HQ Program Manager will contact CG-842 for guidance.
   1) CG-842 shall review available documentation on valuation and select the appropriate source and forward its decision to the HQ Program Manager.

c) The HQ Program Manager shall forward to FINCEN the completed PMDS package.

d) CG-842 will review and approve the package.

e) FINCEN shall receive concurrence with PMDS from CG-842.

f) FINCEN shall relieve CIP expenditures in project/program elements as identified in PMDS.

g) The HQ Program Manager shall review the FINCEN transaction to verify correct movement of funds.

h) FINCEN shall provide the HQ Program Manager with a copy of the PMDS showing application of indirect costs.

4. Within 5 days of receipt of PMDS package:
   a) FINCEN shall record the asset value after review and acceptance of PMDS by CG-842.
   b) The HQ Program Manager shall ensure that assets are recorded in designated fixed asset system.
5. The HQ Program Manager shall conduct a variance review of the rates, estimates, and ending balances in all program-related accounts.
   a) Accrue these remaining costs to the asset to be capitalized only when the value to be capitalized is greater than that available in CIP.
   b) Apply the remaining indirect balances to all assets delivered within the fiscal year of the delivery of the last asset.
6. The HQ Program Manager shall continue to review the remaining account balances until UDOs and commitments have expired or been revised and no outstanding transactions are expected.
7. FINCEN shall close and terminate project/program numbers upon satisfactory notification of no outstanding liabilities from all interested parties.

9.Q CIP Policy Review and Update

1. The HQ Program manager, APM's, and FINCEN-FR shall notify CG-842 of any policy/procedural changes on an as-identified basis.
2. CG-842 shall review those prospective changes and in conjunction with FINCEN-FR and APM's, make policy/procedural updates on an as-needed basis.
3. Interim changes to policy will be promulgated by CG-84 memo until updates are incorporated into the FRMM.

Glossary

Accreditation

The official authorization that is granted to an AIS facility to process classified or sensitive information in its operational environment. Accreditation is based on the determination the AIS is operating at an acceptable level of risk, after a comprehensive security evaluation and consideration of other management factors (e.g., criticality of operations, cost to implement controls, impact on operations, planned changes in AIS operations).

Accrual Basis of Accounting

A method of accounting in which revenues are recognized in the period earned and costs are recognized in the period incurred, regardless of when payment is received or made.

Acquisition

Acquisition of property means obtaining possession and administrative control of property by purchase, lease, donation, transfer from another federal agency, forfeiture, or loan for a period of 60 or more consecutive days.

The FAR defines Acquisition as the acquiring by contract with appropriated funds of supplies or services (including construction) by and for the use of the federal government through purchase or lease, whether the supplies or services are already in existence or must be created, developed, demonstrated, and evaluated. Acquisition begins at the point when an agency needs are established and includes the description of requirements to satisfy agency needs, solicitation and selection of sources, award of contracts, contract financing, contract performance, contract administration, and those technical and management functions directly related to the process of fulfilling agency needs by contract.

Acquisition Cost

Cost to the government of putting property into use at the time the property is originally acquired. It includes all costs incurred to bring the property to a form and location suitable for its intended use. This cost includes amounts paid to vendors, all transportation charges to the point of initial use, handling and storage costs, installation costs, etc., but excludes training costs and warranty costs.

Acquisition Project Manager ("APM")

Manager responsible for documenting status of ACI projects and assets procured on the Project Management Data Sheet (PMDS) form.

Application (Financial or Mixed System)

A group of interrelated components of financial or mixed systems which supports one or more functions and has the following characteristics:

a. A common database
b. Common data element definitions
c. Standardized processing for similar types of transactions.
d. Common version control over software

Apportionment

A distribution by the Office of Management and Budget (OMB) of amounts available for obligation over a specific time periods (usually quarters), and limit the amount of obligations that may be incurred.

Appropriation

An authorization by an act of congress to incur obligations for specified purposes and to make disbursements thereof out of the treasury.

Asset Acceptance (Initial Acceptance)

Condition where Coast Guard accepts delivery for a personal property asset by signing documentation evidencing delivery. This is generally referred to as "initial acceptance".

Automated Information System (AIS)

Is the organized collection, processing, transmission, and dissemination of automated information in accordance with defined procedures.

Average Unit Cost

Cost used for capitalizing multiple like assets in a project. This cost is calculated by dividing total project cost by the number of assets to be produced over the life of the project and allocating the cost to each unit.

Budget Authority

Authority provided by law to enter into obligations, which result in immediate of future outlays involving government funds. The basic forms of budget authority are appropriations, contract authority and borrowing power.

Budget Execution

Budget execution and planning for execution begins some eight months prior to the beginning of the fiscal year, immediately after the president's budget.

Building

A fixed, enclosed structure, usually with walls and a roof, in which personnel work or dwell, equipment is maintained or stored, and other authorized activities (*e.g.,* MWR) are conducted.

Capitalization

Recording and carrying forward any expenditure into one or more future periods (SFFAS #6). This results in expensing the cost of an asset over the remainder of its useful life by matching the benefits gained from that expenditure with the associated cost and does not include repair and maintenance ("R&M") costs.

Capitalization Threshold

The threshold for capitalization of real property, other than land, (i.e., buildings, structures) and personal property (i.e., aircrafts, vessels, electronic systems, furniture, fixtures, equipment, etc.) and improvements as indicated below.

Capital Asset

Non-expendable real and personal property with a useful life of two years or more and an acquisition cost above the capitalization threshold whose cost is expensed over its life.

Capital Lease

Capital leases are leases that transfer substantially all the benefits and risks of ownership to the lessee. If real property is leased under a lease that, at its inception, meets one or more of the following, the lease shall be classified as a capital lease.

Capital Project

A construction or improvement project that meets the requirements for capitalization.

Cash Basis of Accounting

A method of accounting in which revenue is recognized at the time payment is received; and expense is incurred at the time payment is made.

Certification The official authorization that is granted to a sensitive application attesting to the adequacy of its security controls. Certification is made based on an independent review of security controls of the AIS facility and the application program and manual interfaces to determine if security design specifications are correct and have been properly implemented. **Certification (further defined*)*** is synonymous with the term **authorize processing**. Certification is the technical evaluation that establishes the extent to which a computer system, application, or network design and implementation meets a pre-specified set of security requirements. See also (**Accreditation**) and (**Authorize Processing**).

Certification (FPD) There are two basic purposes for FPD certification. First, is to ensure that FPD systems are configured properly, assigned personnel possess require FPD skills and ensure that FPD transmission interfaces are functioning properly. Second, is to review internal controls, separation of duties, data integrity practices, and validate the UAP at the FPD site.

Commitments These are items, which are at the procurement request stage. Only PRs greater than $25,000 are accounted for in CGOF.

Condemnation The legal process in which the United States exercises it power of eminent domain and takes legal ownership or control of non-federal property for federal use. The owner of the property must receive "just compensation" for the property, determined through the appraisal process.

Contracting Officer A person with the authority to enter into, administer, and/or terminate contracts and make related determinations and findings.

Core System The departmental system that primarily carries out summary data functions, such as maintaining the general ledger, financial statement preparation, all central agency financial reports, etc. It may also support specialized activity functions, if determined necessary. However, the core system will not replicate functions or processes that are contained in feeder systems.

Cost Documentation All contracts, purchase orders, receiving reports, acceptance documents, contractor release forms, etc., substantiating project or purchase costs for acquisition, transfer or disposal of assets.

Deferred Maintenance Maintenance that was not performed when it should have been or was scheduled to be and which, therefore, is put off or delayed until a future period. It includes preventative maintenance, normal repairs, replacement of parts and structural components, and other activities needed to preserve the asset so that it continues to provide acceptable services and achieves its expected life. Maintenance excludes activities aimed at expanding the capacity of an asset or otherwise upgrading it to serve needs different from, or significantly greater than, those originally intended.

Depreciation The systematic and rational allocation of an asset's cost over its estimated useful life.

Direct Project Cost Cost that is charged to the AC&I project program elements that are being used to construct or procure assets or goods and services. This cost includes direct materials, travel, contract costs, etc., that are charged directly to the project program elements. For AC&I projects, this includes survey and design. For AFC- 43, direct costs include all construction costs charged to survey and design and charged to the project number.

Designated Approving Authority (DAA) Is the senior management official who authorizes processing (accredits) of an automated information system (major application) or (general support system) and accepts the risk associated with the system.

End User The custodian of a personal property asset.

Estimated Economic Life Estimated remaining period during which property (owned or leased) is expected to be economically usable by one or more users, with normal repairs and maintenance, for the purpose for which it was intended at the property's acquisition or inception of lease, without limitation.

Executory Cost Those costs such as insurance, maintenance and taxes incurred for leased property, whether paid by the lesser or lessee.

Fair Market Value Price for which an asset can be bought or sold in an arm's-length transaction between unrelated parties.

Feeder System Acts as a subsidiary system that captures detail transaction data and periodically records summarized data in the core financial system. These systems must provide adequate audit trails to support transactions and balances maintained in the core system. Feeder systems must carry with them the appropriate level of security and internal controls commensurate with the environment in which they operate.

Financial System The financial systems and financial portion of mixed systems necessary to support financial management. It includes an information system, comprised of one or more applications, that is used for any one of the following: Collecting, processing, maintaining, transmitting, and reporting data about financial events. Supporting financial planning or budgeting activities. Accumulating and reporting cost information; or Supporting the preparation of financial statements.

General Purpose Property (GPP) Asset Personal property that performs general government functions, for example, forklifts, office equipment, computer software, etc.

Gift Real or personal property donated to the Coast Guard by private individual, corporate entity, etc.

Government Furnished Property (GFP) Contractor-held property that is a tangible asset, includes commercial off-the-shelf (COTS) software, regardless of dollar value, in the possession of the contractor or subcontractor owned by or leased to the government. It includes assets obtained by the government under the terms of the contract, which are also contractor-held.

Heritage Asset Real or personal property of historical, natural or cultural importance, which is expected to be preserved indefinitely, such as historic lighthouses, monuments, and artifacts.

Historical Cost Cost to acquire an asset and make it ready for operational use, i.e., acquisition, transportation and installation costs, or net book value and/or transportation costs of excess items received from other government agencies ("OGA"), or nominal value if no transportation costs are involved.

Imprest Fund A fixed cash fund in the form of currency, coin, or government checks. An official government-disbursing officer advances the fund with charge to an appropriation or fund account, to a duly authorized custodian for cash disbursements or other cash requirement purposes as specified in this manual.

Improvement A cost that substantially increases an asset's capability, capacity or service life of an asset. For accounting purposes, an improvement is differentiated from the civil engineering definition of improvement in reference (5), which includes only the increase in capability or capacity. Life extension is addressed under the civil engineering definition of rebuilding ("R"). Improvements meeting capitalization thresholds are capitalized and charged against the periods in which the improvement is used. This is also differentiated from the term "Improvement" as defined in reference (4) as any permanent buildings, structures or fixtures located upon land.

Indirect Project Cost Cost that is not incurred in the direct ACI project program elements that are being used for construction or purchase, but that will be allocated to the project for purposes of determining capitalization value. This cost includes indirect labor, and for personal property, survey and design costs. These costs are in separate AC&I program elements and allocated to projects to derive total project cost.

Information Technology The term 'information technology", with respect to an executive agency, means any equipment or interconnected system or subsystem of equipment that is used in the automatic acquisition, storage, manipulation, management, movement, control, display, switching, interchange, transmission or reception of data or information by the executive agency.

Information System The organized collection, processing, transmission, and dissemination of information in accordance with defined procedures, whether automated or manual. Information systems include non-financial, financial, and mixed systems.

In-Service Date For personal property, the date of final inspection/acceptance. For real property, the date of beneficial occupancy.

Internal Control	Auditors should obtain a sufficient understanding of internal controls to plan the audit and determine the nature, timing, and extend of tests to be performed.
Management Accountability	The expectation that managers are responsible for the quality and timeliness of program performance, increasing productivity, controlling costs and mitigating adverse aspects of agency operations, and assuring that programs are managed with integrity and in compliance with applicable law.
Management Controls	The organization, policies, and procedures used by agencies to reasonably ensure that (1) programs achieve their intended results; (2) resources are used consistent with agency mission; (3) programs and resources are protected from waste, fraud, and mismanagement; (4) laws and regulations are followed; and (5) reliable and timely information is obtained, maintained, reported and used for decision making.
Mixed System	An information system that supports both financial and non-financial functions of the federal government or components thereof.
Multi-use Heritage Asset	Real property of historical nature that has a primarily operation function.
Net Book Value	Original acquisition cost of an asset less its accumulated depreciation.
Net Plant Replacement Value	PRV less the calculated depreciation of PRV over the asset's useful life.
Net Realizable Value	Amount of compensation the U.S. Government expects to receive upon disposal of property.
Non-Capitalized Asset	Asset with a unit acquisition cost less than the established capitalization threshold. Such an asset is expensed at time of acquisition and accounted for in the asset system for management purposes only.

Non-Financial

An information system that supports non-financial functions of the federal government or components thereof and any financial data included in the system are insignificant to agency financial management and/ or not required for the preparation of financial statements.

Object Class

A four digit code that defines what the funds were spent to procure. Object classes should be assigned carefully to each procurement they are the basic building blocks of a spending plan, answering the question," how did you spend your money?"

Operating Lease

An agreement conveying the right to use property for a limited time in exchange for periodic rental payments, which does not meet any of the criteria of a capital lease.

Oracle Fixed Assets Module

The official Coast Guard system for maintaining fixed assets financial records.

Oracle Project Accounting

This module is used individually within some Coast Guard units to share daily business intelligence with all relevant project stakeholders through an integrated, collaborative system built using a common data repository.

The identifying number for real property in the Oracle Asset System. This consists of the OPFAC, site and Real Property Facility Number ("RPFN").

Personal Property

Any property except real property, including but not limited to equipment, furniture, and vehicles. Personal property tends to be movable and is not permanently affixed to land.

Plant Replacement Value

The estimated cost of replacing a real property asset as calculated by the Civil Engineering Data System. This value is used for planning purposes only and is not equivalent to historical cost.

Program Project or Activity (PPA)

A PPA is a major category within an appropriation, such as the Marine Safety and Maritime Law Enforcement PPA in the Research, Development, Testing & Evaluation (RDT&E) Appropriation.

Public Domain Land Real property, generally unimproved land, which has never been owned by anyone other than the United States, with the exception of a foreign government.

Real Property Land, and any interests in land, together with the buildings and structures, if any, located thereon."

Real Property Facility Number Unique identifier of a real property facility within an OPFAC and site.

Reapportionment A revision of a previous apportionment of budgetary resources for an apparition or fund account. This revision must approved by OMBs.

Rebuilding The cost of replacing an element of the shore plant with an element of comparable capacity or capability, such as the replacement of a pier, for extending the life of an asset. A project is considered to be life extending if the facility is past its mid-life and consists of significant repairs or renovations to one or more systems. Any rebuilding of a fully depreciated facility is considered to be life extending.

Repair and Maintenance Cost of routine recurring work that is required to minimize the effects of deterioration and keep property in a condition fit for its intended use. This cost includes preventative maintenance, normal maintenance and replacement of similar structural components and is charged to the period incurred. R&M cost is not considered an improvement because it does not increase existing capability, capacity or service life.

Risk Assessment (or Risk Analysis An analysis of assets and vulnerabilities, and threats to those assets to determine the level of risk to an AIS. Risk is "measured" either quantitatively or qualitatively by determining the impact of threats on the facility, system, information, personnel, and supported organizations or other users.

Security — The effectiveness level of the controls which allow access to an AIS such that only properly authorized individuals, or processes operating on their behalf, will have access to read, write, create, or delete information, or interfere with the timely processing of information. Also the measures required to protect against unauthorized (accidental or intentional) disclosure, modification, or destruction of automated systems and data, and denial of service to process data. Components include Physical Security, Administrative Security, Personnel Security, and Technical Security (hardware, software, and communications).

Service Life — The normally expected operating life of an asset.

Single Integrated Financial Management System — A unified set of financial systems and the financial portions of mixed systems encompassing the software, hardware, personnel, process (manual and automated), procedures, controls and data necessary to carry out financial management functions, manage financial operations of the agency's financial status to central agencies, Congress and public.

Stewardship Land — Land not acquired for or in connection with the purpose of constructing operational buildings and structures, such as forests or parks. Currently, the Coast Guard does not control any Stewardship Land.

Stewardship Property — Property owned by the United States of America, categorized as Heritage Assets, Multi-use Heritage Assets or Stewardship Land, for which established useful life would have little meaning to financial statement users.

Structure — Any fixed structure that does not meet the definition of a building. Examples would include roads, runways, helicopter landing pads, fences, skeletal towers, docks, piers, and wharves.

Total Cost — All costs incurred to place an asset in service.

Unified — Unified means that systems are explained for and managed together, operated in an integrated fashion, and linked together electronically in an efficient and effective manner to provide agency-wide financial system support necessary to carry out the agency's mission and support the agency's financial management needs.

Unit Approved Plan Unit Approved Plan (UAP) provides the specific guidance on the adequate separation of duties to achieve standards for internal control to the maximum extent possible. Federal standards for internal control are contained in OMB Circular A-123, Internal Control Systems. These controls, at a minimum, shall include adequate separation of procurement authorization, fund certification, receipt of goods, account reconciliation, and FPD site administration duties.

Working Capital A revolving fund that operates as an accounting entity. In these funds, the assets are capitalized and all income is in the form of offsetting collections derived from the funds' operations.

Zero-Base Budget A budget technique that generally attempts to analyze budget requests without an implicit commitment to sustaining past levels of funding. Under this system programs and activities are organized and budgeted in a detailed plan that focuses review, evaluation, and analysis on all proposed operations-rather than on increases above current levels of operations, as in incremental budgeting. Programs and activities are analyzed in terms of successively increasing levels of performance and funding, starting from zero, and then evaluated and ranked in priority order. The purpose is to determine the level, if any, at which each program or activity should be conducted.

ACRONYM LIST

ABCM	Activity Based Cost Management
ACH	Automated clearinghouse
ACO	Authorized certifying officer
ACO	Authorized contracting officer
ACTEUR	Activities Europe
ADM	Acquisition Decision Memorandum
AFC	Allotment fund control code
AFTS	Automated Funds Transfer System
AICP	Aviation Inventory Control Point
AICPA	American Institute of Certified Public Accountants
ALLOTMENT	An authentication by an operating agency making funds available to another officer for obligation.
APM	Acquisition Project Manger
ARMS	Automated Requisition Management System
ARTIC	Abolish Red Tape in Contracting Program
ASMC	American Society of Military Comptrollers
ASPR	Armed Services Procurement Regulations
ATU	Administrative Target Unit
ATU	Appropriation Target Unit
BA	Bridge Administration
BIB	Budget in Brief

ACRONYM LIST

BPA	Blanket Purchase Agreement
BY	Budget Year
CAMP	Competitive Acquisition Management Panel
CAS	Cost Accounting Standards
CBD	Commerce Business Daily
CCA	Clinger-Cohen Act
CFO	Chief Financial Officer
CGAA	Coast Guard Authorization Act
CGAP	Coast Guard Acquisition Procedures
CGARC	Coast Guard Acquisition Review Council
CGOF	Coast Guard Oracle Financials
CIFP	Changes In Financial Plan
CIS	Contract Information Center
COCO	Chief of the Contracting Office
COFR	Certificates of Financial Responsibility. The USCG issues these certificates to foreign commercial vessels. It indicates whether a potential oil spiller has enough insurance or financial collateral to cover oil spill expenses.
COMDT	Commandant
COMDTINS	Commandant Instruction
CONUS	Continental of United States
COST CENTER	Is generally the OPFAC number of the unit that benefits from or is to be charged for a purchase

COTR	Contracting Officer's Technical Representative
COTS	Commercial Off-the-Shelf
COWP	Contracting Officer Warrant Program
CSRS/FERS	Civil Service Retirement System/Federal Employees Retirement System
CY	Calendar Year
DAWIA	Defense Acquisition Workforce Improvement Act
De-obligation	An agency's cancellation or downward adjustment of previously recorded obligations.
EC&R	Environmental Compliance and Restoration
EDI	Electronic Data Interchange
EFT	Electronic Funds Transfer
EPA	Economic Price Adjustment
EPA	Environmental Protection Agency
FACNET	Federal Acquisition Computer Network
FAR	Federal Acquisition Regulation
FARA	Federal Acquisitions Regulations Automated
FEEF	Facilities Energy Efficiency Fund
FEMA	Federal Emergency Management Agency
FFRIA	Federal Financial Management Improvement Act
FIA	Financial Inventory Accounting

FINCEN	Finance Center
FLSA	Fair Labor Standard Act
FMFIA	Federal Managers' Financial Integrity Act
FMS	Financial Management Service of the Department of the Treasury
FPA	Financial Property Accounting
FPD	Finance and Procurement Desktop
FREDIM	FINCEN's Rapid Electronic Data Interchange Method System
FTA	Financial Transfer Authorization
FY	Fiscal Year
GAGAS	Generally accepted government auditing standards
GAO	General Accounting Office
GL	General Ledger
GOTS	Government Off the Shelf
GOTS	Government Off the Shelf System
GOV	Government owned vehicle
GTR	Government Transportation Request
HCA	Head of the Contracting Activity
HOA	Head of Operating Administration
IAG	Interagency Agreement
ICP	Inventory Control Point

IPPS	Integrated Personnel and Payroll System
IT	Information Technology
ITMRA	Information Technology Management Reform Act
JOTFOC	Justification For Other Than Full and Open Competition
JUMPS	Joint Military Pay System
KO	Contracting Officer
LANTAREA	Atlantic area
LIM	Appropriation Limitation Code
LORAN	Long range aids to navigation
MAL	Microcomputer Allowance List
MAPP	Major Acquisition Policies and Procedures
MAR	Major Acquisition Review
MARB	Major Acquisition Review Board
MBS	Multi Year Budget Strategy
MER	Marine Environmental Response
MILSTRIP	Military Standard Requisition & Issuing Procedures
MIPR	Military Interdepartmental Purchase Request
MIR	Management Information Reporting
MIS	Management Information System
MLC	Maintenance and Logistics Command
MLCA	Maintenance and Logistics Command, Atlantic

MLCPAC	Maintenance and Logistics Command Pacific
MOA	Memorandum of Agreement
MOE	Measure of Effectiveness
MOU	Memorandum of Understanding
MWR	Moral, Welfare and Recreation
NA	Non-Appropriated Fund
NAFA	Non-Appropriated Funds Activity
NOAA	National Oceanic & Atmospheric Administration
NON-PERISHABLE	All goods and services except meat, milk, fresh fruit, and fresh vegetables
NPFC	National Pollution Change Order
NTNO	Navy -Type Navy- Owned Equipment
OE	Operating Expense
OFCO	Operating Facility Change Order
O&M	Operations and Maintenance
OMB	Office of Management and Budget
ONSC	Omega Navigation Systems Center
OPA	Oil Pollution Act of 1990
OPFAC	Operating facility code. A five-digit code that denotes cost center.
OPM	Office of Personnel Management

OPTAR	Operating Target
OSLTF	Oil Spill Liability Trust Fund
PAA	Personnel Allowance Amendment
PAL	Personnel Allowance List
PALT	Procurement Acquisition Lead Time
PBPM	Planning, Budgeting, and Performance Management
PCO	Procuring Contracting Officer
PE	Program Element
PERISHABLES	Meat, milk, fresh fruit, and fresh vegetables
PERSRU	Personnel Support Unit
PES	Program Element Status
PMIS	Personnel Management Information System
PO	Purchase Order
POC	Point of Contact
POV	Privately Owned Vehicle
PPBES	Planning, Programming, Budgeting and Evaluation System
PPRB	Planning Proposal Review Board
PWS	Performance Work Statement
RA	Requirements Analysis
RDT&E	Research, Development, Test, and Evaluation
RP	Resource/Requirements Proposal

RFAM	Resource, Financial and Asset Management
RP	Resource Program/Proposals
RPAL	Reserve Personnel Allowance List
RSA	Regional Strategic Assessment
RT	Reserve Training
RTC	Reserve Training Center
SAM	Systems Acquisition Manual
SOP	The Finance Center Standard Operating Procedures
SOW	Statement of Work
SPC	Standard Personnel Costs
SPPBEE	Strategic Planning, Business and Capital Planning, Programming, Budgeting, Budget Execution, and Evaluation
SSO	Source Selection Official
STAR	Standard Automated Requisitioning
TAE	Transportation Acquisition Executive
TAM	Transportation Acquisition Manual
TAR	Department of Transportation Acquisition Regulation
TONO	Travel Order Number
TSARC	Transportation System Acquisition Review Council
UFS	Unit Financial System