U.S. Department
of Transportation

**Federal Highway
Administration**

Publication No. FHWA-SA-91-033

May 1992

Sign Fabrication, Installation, and Maintenance—Innovative Practices

Office of Technology Applications
Office of Highway Safety

Safety and System Applications
400 Seventh Street, SW.
Washington, D.C. 20590

Innovation Through Partnerships

Notice

This document is disseminated under the sponsorship of the Department of Transportation in the interest of information exchange. The United States Government assumes no liability for its contents or use thereof.

The contents of this report reflect the views of the contractor who is responsible for the accuracy of the data presented herein. The contents do not necessarily reflect the official policy of the Department of Transportation.

This report does not constitute a standard, specification, or regulation.

The United States Government does not endorse products or manufacturers. Trade or manufacturers' names appear herein only because they are considered essential to the object of this document.

Technical Report Documentation Page

1. Report No. FHWA-SA-91-033	2. Government Accession No.	3. Recipient's Catalog No.
4. Title and Subtitle SIGN FABRICATION, INSTALLATION, AND MAINTENANCE -- INNOVATIVE PRACTICES		5. Report Date May 1992
		6. Performing Organization Code
		8. Performing Organization Report No.
7. Author(s) Hugh W. McGee, Nancy L. Geisler, Lynne F. McGee, Harold T. Thompson		
9. Performing Organization Name and Address Bellomo-McGee, Inc. 8330 Boone Blvd, Suite 700 Vienna, VA 22182	Subcontracting Services National Safety Council 444 North Michigan Ave. Chicago, IL 60611-3991	10. Work Unit No. (TRAIS)
		11. Contract or Grant No. DTFH61-89-C-00074
12. Sponsoring Agency Name and Address Federal Highway Administration 6300 Georgetown Pike McLean, VA 22101		13. Type of Report and Period Covered Final Report September 1989 - March 1991
		14. Sponsoring Agency Code

15. Supplementary Notes

FHWA Contract Manager (COTR): Jack Wasley (HTA-11)
Technical Assistants: Travis Brooks (HHS-31) and Bing Wong (HHS-22)

16. Abstract

Many State and local agencies have developed innovative procedures and devices to facilitate highway sign fabrication, installation, and maintenance. This handbook describes several of these innovations.

A literature review and nationwide search was made to gather information on innovations. The innovations that were received ranged from very simple, but effective tools, to more elaborate sign trucks. Innovations were developed from new uses for existing equipment and modifications to existing equipment or procedures to provide a more efficient use for it. A total of 27 innovations are described in the report. The information is provided in a concise format and includes a description, procedure for the product's use, the benefits attained, and a person to contact for further information.

17. Key Words Signs, Fabrication, Insallation, Maintenance		18. Distribution Statement No restrictions. This document is available to the public through the National Technical Information Service, Springfield, VA 22161	
19. Security Classif. (of this report) Unclassified	20. Security Classif. (of this page) Unclassified	21. No. of Pages 63	22. Price

Form DOT F 1700.7 (8-72) Reproduction of completed page authorized

SI* (MODERN METRIC) CONVERSION FACTORS

APPROXIMATE CONVERSIONS TO SI UNITS

Symbol	When You Know	Multiply By	To Find	Symbol
		LENGTH		
in	inches	25.4	millimetres	mm
ft	feet	0.305	metres	m
yd	yards	0.914	metres	m
mi	miles	1.61	kilometres	km
		AREA		
in^2	square inches	645.2	millimetres squared	mm^2
ft^2	square feet	0.093	metres squared	m^2
yd^2	square yards	0.836	metres squared	m^2
ac	acres	0.405	hectares	ha
mi^2	square miles	2.59	kilometres squared	km^2
		VOLUME		
fl oz	fluid ounces	29.57	millilitres	mL
gal	gallons	3.785	litres	L
ft^3	cubic feet	0.028	metres cubed	m^3
yd^3	cubic yards	0.765	metres cubed	m^3

NOTE: Volumes greater than 1000 L shall be shown in m^3.

		MASS		
oz	ounces	28.35	grams	g
lb	pounds	0.454	kilograms	kg
T	short tons (2000 lb)	0.907	megagrams	Mg
		TEMPERATURE (exact)		
°F	Fahrenheit temperature	5(F-32)/9	Celcius temperature	°C

APPROXIMATE CONVERSIONS FROM SI UNITS

Symbol	When You Know	Multiply By	To Find	Symbol
		LENGTH		
mm	millimetres	0.039	inches	in
m	metres	3.28	feet	ft
m	metres	1.09	yards	yd
km	kilometres	0.621	miles	mi
		AREA		
mm^2	millimetres squared	0.0016	square inches	in^2
m^2	metres squared	10.764	square feet	ft^2
ha	hectares	2.47	acres	ac
km^2	kilometres squared	0.386	square miles	mi^2
		VOLUME		
mL	millilitres	0.034	fluid ounces	fl oz
L	litres	0.264	gallons	gal
m^3	metres cubed	35.315	cubic feet	ft^3
m^3	metres cubed	1.308	cubic yards	yd^3
		MASS		
g	grams	0.035	ounces	oz
kg	kilograms	2.205	pounds	lb
Mg	megagrams	1.102	short tons (2000 lb)	T
		TEMPERATURE (exact)		
°C	Celcius temperature	1.8C + 32	Fahrenheit temperature	°F

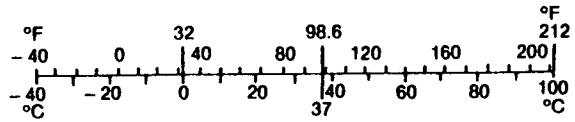

* SI is the symbol for the International System of Measurement

(Revised April 1989)

TABLE OF CONTENTS

Page

Chapter 1 INTRODUCTION

Technique: A Nationwide Search 1
Organization 1

Chapter 2 FABRICATION

Paper-Letter Reverse-Screen Process 2
Printing Process Using Paper Stencils and Silk-Screen Borders 6
Vertical Legend Application Board 9
Extrusion Panel Easel 11
Extrusion Bracket to Lift Signs 13
Skids to Store Metal Sign Blanks 15
Silk-Screen Wash Bay Modification 17
Sign Substrate Recycling 19
Sign Recycling Furnace 21
Aluminum Sign Blank Recycling Program 22
Disposal of Scrap and Screening Room Materials 24

Chapter 3 INSTALLATION

Rigid-Mount Street Name Sign Assembly 26
Bracket for Span Wire Mounting 30
Back-To-Back Sign Mounting Bracket 32
Double Chevron Mounting Procedure 34
Keeper Plates for Structural Steel Breakaway Sign Supports 36
Hydraulic Guidepost Driver and Puller 38
Shovel for Post Hole Debris & Chisel Safety Holder 41

Chapter 4 MAINTENANCE

All-Purpose Sign Truck with Modifications 43
Swing-Out Walkway 46
Portable Step 48
Tools to Pull Posts: Bear Claw Wooden Post Puller, Pipe Clamp, Pry Bar with Stand, and A-Frame Puller 50
Tools to Extract Broken Posts 54
Steel Post Straightener or "Twister Hook" 56
Sign Identification 58
Wood Post Anti-Theft Cleat 60
Sign Vandalism: Public Information Campaign, Miniature Sign Replicas & Public Presentations 62

LIST OF FIGURES

Figure		Page
1	Layout of paper letters on sign blank	2
2	Blanks are set onto raised jig	3
3	Flood pass is made with the screen off the sign	3
4	After first screen pass is made, letters will stick to the screen	4
5	Letters are removed with masking tape	4
6	Letters are easily discarded	5
7	Silk screen with a border and a larger open area	6
8	Paper stencil provides message in the center of a silk-screen border	6
9	Openings in characters are filled with vellum paper	7
10	Stencil is placed on sign blank	7
11	Finished screened sign	8
12	Vertical legend application board	9
13	Extrusion panel easel to fabricate and disassemble signs	11
14	Panels are attached to the post with specially designed vice grips (lower left corner)	12
15	Extrusion bracket to lift signs safely	13
16	Bracket slides into place at the back of the extruded panel sign	14
17	Stacking skid to store metal sign blanks	15

List of Figures (Cont'd)

Figure		Page
18	Modified skid where metal sign blanks are stacked at a 75-degree angle	15
19	Silk-screen wash bay drainage system	17
20	Silk-screen wash bay drainage system showing disposal drums	17
21	Sign abrader used during recycling process	19
22	Dust collector outside of building	20
23	Before and after of a recycled sign	22
24	Dumpster filled with scrap awaiting pick-up by outside vendor	24
25	Soiled cloth rags in wire basket inside metal barrel	25
26	Homemade wedge to pry apart two joined signs	26
27	Two joined signs are wedged apart at the center with homemade wedge	27
28	Pin prevents larger tube from slipping completely over the smaller tube	28
29	Back-to-back signs are shimmied down the wedge	28
30	A second set of back-to-back signs is added to the 2-in (50.8-mm) tube	29
31	Sign bracket ready for installation on permanent posts	29
32	Exploded view of the span wire mounting bracket	30
33	Side and top view of back-to-back sign mounting bracket	32
34	Maximum angle, front	34

List of Figures (Cont'd)

Figure		Page
35	Maximum angle, rear	34
36	Spacing of the holes	35
37	Rectangular plate and dimensions	36
38	Side elevation view of placement of keeper plate	37
39	Puller mounted on removable platform	38
40	Driver sitting on post welded to the driver's side of the platform	39
41	Chisel safety holder	41
42	Small shovel to remove debris from post hole	42
43	Sign truck with custom-designed storage compartments and auger on the rear of the passenger side	43
44	Auger mount with frame of two 5-in (127-mm) steel pipes	44
45	Auger sitting on heavy-duty bumper at the rear of the truck	44
46	Racks that prevent signs from being damaged	45
47	Swing-out walkway with handrails	46
48	Walkway swivels on a 2-ft (0.6-m) diameter steel circular plate	47
49	Latch that holds walkway in stored position	47
50	Portable steps that lock onto wooden posts	48
51	Portable step materials and dimensions	49

List of Figures (Cont'd)

Figure		Page
52	Top and isometric view of bear claw	50
53	Pipe clamp dimensions (left) and assembled	51
54	Pry bar and stand with Y-shaped cap	51
55	A-frame post puller made from delineator post	52
56	Tool #1 removes wood posts	54
57	Tool #2 removes wood and steel posts	54
58	Tool #3 removes steel posts	55
59	Twister hook straightens bent metal posts	56
60	Tool hooks onto front of bent U-channel post	57
61	User walks around post until post stands up	57
62	New York State Department of Transportation sign label	58
63	Cleat is attached to the backside at the bottom of the post	60
64	Extraction device to pull cleat from the post	61
65	Front of STOP sign replica	62
66	Back of STOP sign replica	62
67	Front of NO PASSING ZONE sign replica	63
68	Back of NO PASSING ZONE sign replica	63

Chapter 1
INTRODUCTION

INTRODUCTION

During day-to-day operations, personnel in public agencies have devised inventive procedures and devices to facilitate sign fabrication, installation, and maintenance. The purpose of this manual is to describe some of the practical solutions used by sign shop and maintenance workers that can be used to improve operations.

TECHNIQUE: A NATIONWIDE SEARCH

To prepare this manual, a nationwide search was conducted. Notices were put in various publications soliciting from public agencies innovative techniques, equipment, and materials for fabricating, installing, and maintaining highway signs. Where necessary, follow-up visits to sign shops and maintenance facilities took place.

Representative items that can be widely used were selected from those submitted to appear in the manual. Twenty-seven cost-saving and/or time-saving items are included. Specifications are provided so that others can duplicate the idea; however, a contact person is also listed with each item, in case additional information is needed. Some contributors, as noted in the text, will provide videos demonstrating their innovative ideas.

The items identified in the search demonstrate that necessity truly is the mother of invention. Innovations included simple ideas, such as placing 1/8-in (3.2-mm) nylon washers on both sides of an aluminum sign blank to prevent deterioration of the blanks when they are attached to Kimonite-treated wood posts (Department of Public Works, King County, Washington). Other clever ideas ranged from ingenious tools for installing, straightening, and removing signs to several elaborately designed sign utility trucks that carry signs and equipment in an orderly, safe manner for efficient operations on the road.

The search also revealed that sign personnel are resourceful when it comes to recycling, as many of the tools were made from scraps and parts from broken machinery. The fact that some items were fabricated from scraps is noted in the appropriate cost appraisals.

ORGANIZATION

The manual is divided into three sections: 1). Fabrication, 2). Installation, and 3). Maintenance. The maintenance section contains information on sign identification and anti-vandalism programs, as well as equipment used in maintenance. It is hoped that this manual will provide information that will improve operations in sign shops and maintenance programs.

Chapter 2
FABRICATION

Paper-Letter Reverse-Screen Process
Printing Process Using Paper Stencils and Silk-Screen Borders
Vertical Legend Application Board
Extrusion Panel Easel
Extrusion Bracket to Lift Signs
Skids to Store Metal Sign Blanks
Silk-Screen Wash Bay Modification
Sign Substrate Recycling
Sign Recycling Furnace
Aluminum Sign Blank Recycling Program
Disposal of Scrap and Screening Room Materials

PAPER-LETTER REVERSE-SCREEN PROCESS

DESCRIPTION: A reverse-screen sign fabricating procedure, developed by the Department of Public Works, Monroe County, New York, uses paper guides for the letters, and the background of the sign is silkscreened onto the sign blank. Previously, Monroe County used retroreflective letters heat applied to sign blanks.

PROCEDURE: Monroe County prepares a blank sign by applying white pressure-sensitive retroreflective sheeting with a standard squeeze roll applicator. Next, they place paper letters, which are die-cut locally, onto the prepared blank. The paper is a general purpose bond that will not absorb the ink.

To make a street name sign, the sign blank is placed on a table with guides that hold it in place. A wire is stretched 2 in (50.8 mm) from the bottom of the blank to serve as a guide to placing the letters on the sign blank. (See Figure 1.) A blank is then placed into the screen press onto a jig that is raised 0.25 in (6.4 mm) off the table. It is placed so the opening in the screen is centered, leaving a 0.5-in (12.7-mm) border around the sign. (See Figure 2.)

Next, green ink is applied to the screen. The screen is lowered to the table, and a flood pass is made across the screen with the screen off the sign. (See Figure 3.) After the first screen pass is made, the paper letters stick to the screen. The paper letters are lifted with the screen when it is raised. (See Figure 4.) They are then removed from the screen with masking tape, and the screen is ready for the next sign. (See Figure 5.)

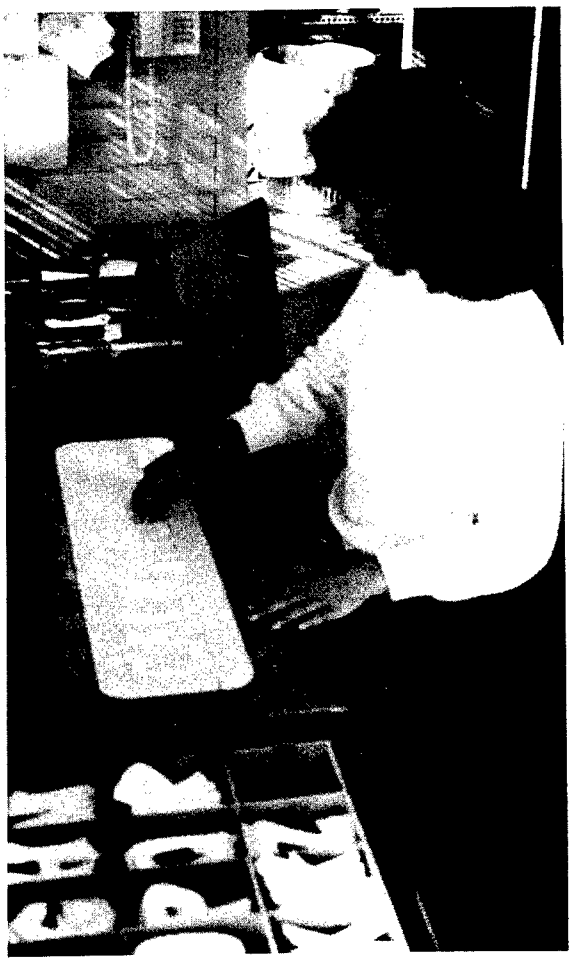

Figure 1. Layout of paper letters on sign blank.

Each set of paper letters can be reused as many as 20 times. After that time they are discarded. (See Figure 6.)

This process can be used with only slight modifications for most reverse-screened signs shown in the Manual on Uniform Traffic Control Devices (MUTCD).

Figure 2. Blanks are set onto raised jig.

Figure 3. Flood pass is made with the screen off the sign.

Figure 4. After first screen pass is made, letters will stick to the screen.

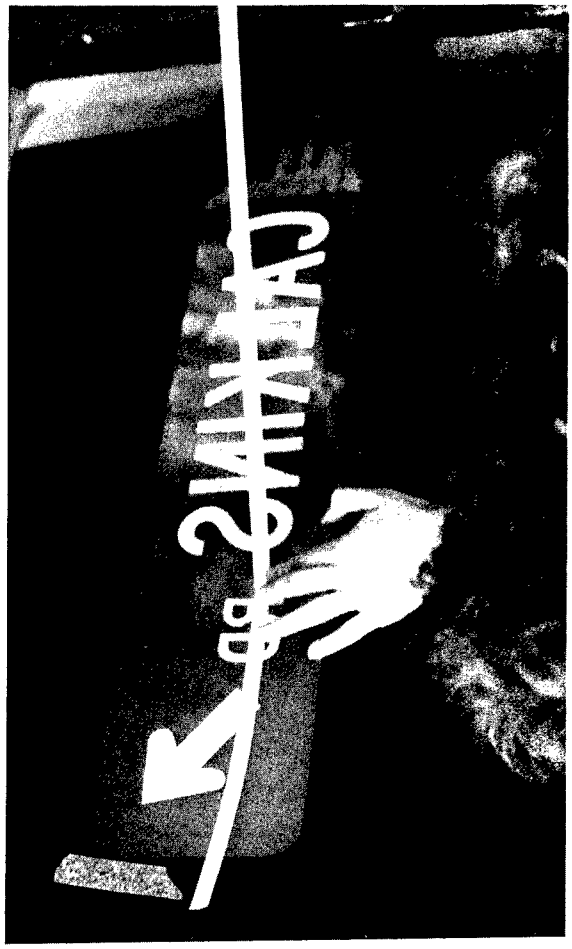

Figure 5. Letters are removed with masking tape.

Figure 6. Letters are easily discarded.

BENEFITS: The paper letters purchased from an outside source cost approximately three cents per letter; whereas, a retroreflective letter can cost approximately 26 cents. Because the paper letters can be reused, the cost savings are even greater.

Productivity is increased. Monroe County estimates that using their previous method, they produced approximately 60 signs a day. With the paper-letter reverse-screen process, Monroe County can produce up to 300 signs per day. Their paper-letter reverse-screen signs have not failed in the field. Dirt and water cannot absorb through the sign face; therefore, letters are not loosened.

CONTACT: Bernie Knoeferl, Sign Fabrication Foreman, Monroe County Department of Public Works, Highway and Traffic Engineering Division, 350 East Henrietta Road, Rochester, New York, 14620. Phone: (716) 274-7931. A pamphlet illustrating this procedure is available.

PRINTING PROCESS USING PAPER STENCILS AND SILK-SCREEN BORDERS

DESCRIPTION: The Ohio Department of Transportation (Ohio DOT) uses a paper stencil combined with a silk-screen border to print legends on standard-sized signs. The stencil provides the message in the center while a silk screen furnishes the border. Paper stencils allow various legends to be placed within widely-used silk-screen borders. The process works well with warning signs, route markers, and speed limit signs. For example, the legend "SPEED LIMIT" is incorporated into the silk-screen border, and stencils furnish the various numbers.

PROCEDURE: A silk screen is constructed with a border and a large open area, as illustrated in Figure 7. During printing the opening is covered with a stencil made from 0.004-in (0.1-mm) thick Tympan paper, as shown in Figure 8. Stencils are either cut by hand or created by a computerized plotter equipped with a knife blade. The oil-based paper inhibits the ink from penetrating into the pores. Openings in characters, such as O, 9, D, are filled with vellum paper to block the ink, as illustrated in Figure 9. Strips of double-sided masking tape are attached to the back of the cut-outs to prevent a vacuum from forming between the sign face and the vellum cut-outs. Cut-out centers are discarded when screening is completed.

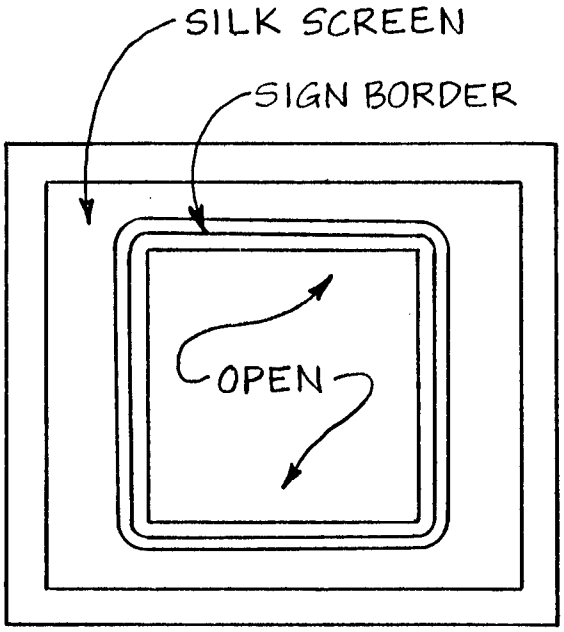

Figure 7. Silk screen with a border and a larger open area.

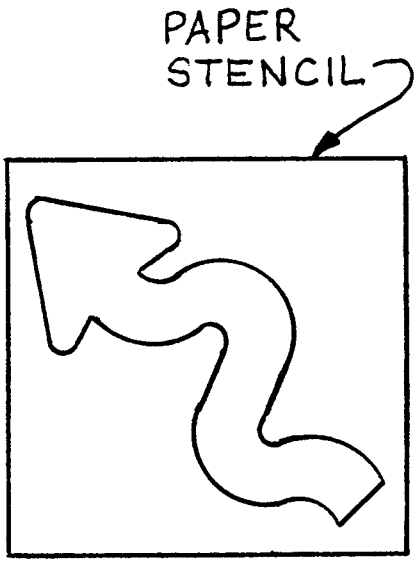

Figure 8. Paper stencil provides message in the center of a silk-screen border.

For the first pass, the stencil is placed on the sign blank, and the silk screen is lowered onto the sign. The stencil adheres to the silk screen for the remainder of

Figure 9. Openings in characters are filled with vellum paper.

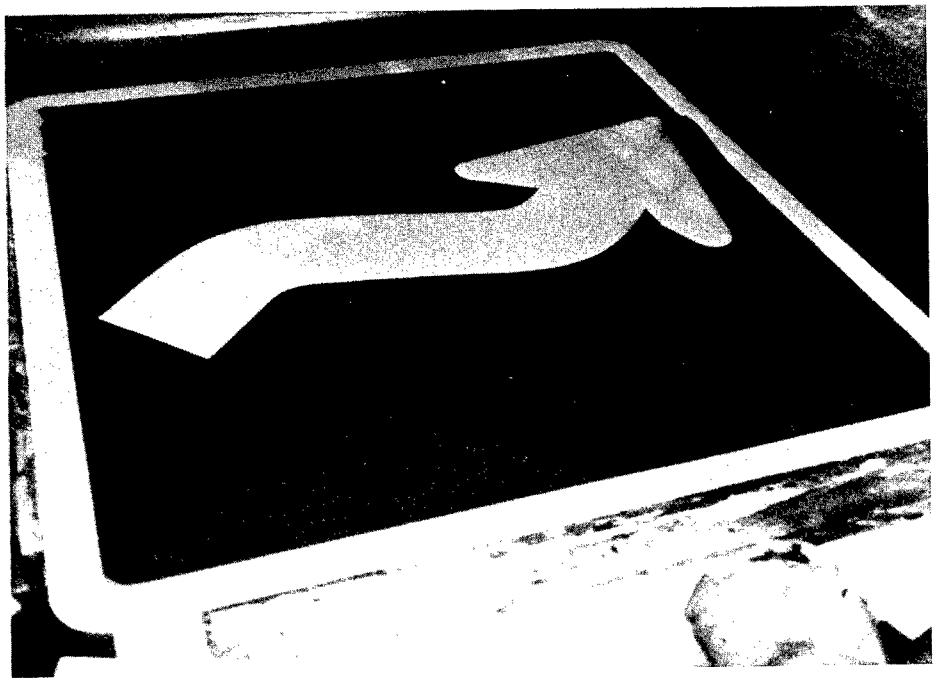

Figure 10. Stencil is placed on sign blank.

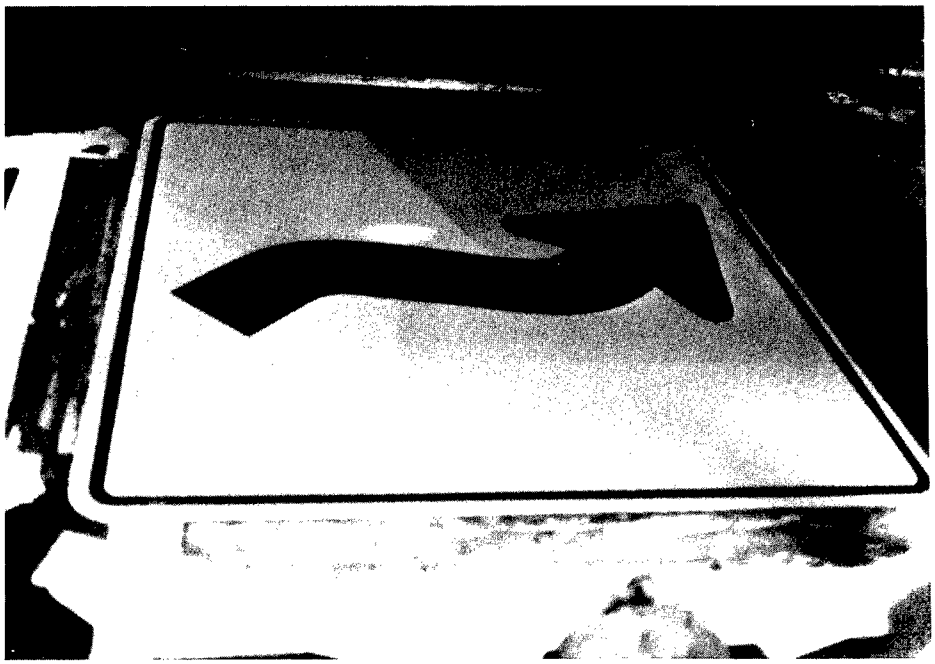

Figure 11. Finished screened sign.

passes in each run. (See Figures 10 and 11.)

After completing a run, the stencil is removed and sprayed with a thinning solvent suited to the ink. A soft-bristled brush spreads the thinning agent over the stencil. A final application of the thinner is applied to rinse the stencil. Stencils are hung to dry overnight in a well ventilated room. With proper handing they can be reused up to 20 times, depending on the ink used.

BENEFITS: The Ohio DOT sign shop has found this technique to be cost-effective. It is used for approximately 90% of the silk-screened signs produced. The use of paper stencils reduces screen-changing time between set-ups. Screen changes take 15 to 20 minutes while stencil changes require approximately five minutes.

Money is saved because the sign shop can run numerous signs of the same size, such as 30-in (762-mm) warning signs, with various legends by using one silk-screen border with different stencils. This procedure reduces the number of silk screens in their inventory.

Each stencil is filed by size and sign code number for easy retrieval. The stencils can easily be disposed of and replaced, as needed. The Ohio DOT stores sign symbols and legends on a computer that is connected to their microcomputer sign maker system. This allows quick production of special legends.

CONTACT: Jim Roth, Ohio Department of Transportation, 25 South Front Street, Columbus, Ohio 43215. Phone: (614) 644-8115.

VERTICAL LEGEND APPLICATION BOARD

DESCRIPTION: A vertical legend application board was designed by Illinois Department of Transportation (ILDOT) to use in the layout and fabrication of overlay panels for large highway guide signs. After trying out a small vertical application board, ILDOT is building a larger board shown in Figure 12, which will operate from a pit in the sign shop floor to accommodate bigger signs. The application board is slanted approximately 5 degrees from the vertical and can accommodate signs up to 12 ft (3.7 m) high and 20 ft (6.1 m) wide. The application board is operated by a small electric motor. A worker uses button controls to raise or lower the board until it is at a comfortable working height. The unit is being built at a cost of $23,750.

PROCEDURE: Sign shop personnel position the vertical legend application board at a convenient height to secure the first line. As layout proceeds, the board is raised or lowered to allow easy installation of subsequent lines.

BENEFIT: When signs are laid out on flat surfaces, they often get scuffed or scratched from workers crawling on the sign face. Furthermore, letters are sometimes dropped and stick to the surface. The vertical legend application board not only eliminates these problems, but also speeds sign layout and fabrication because sign shop personnel can now move freely along the front of the sign instead of having to crawl over the sign face.

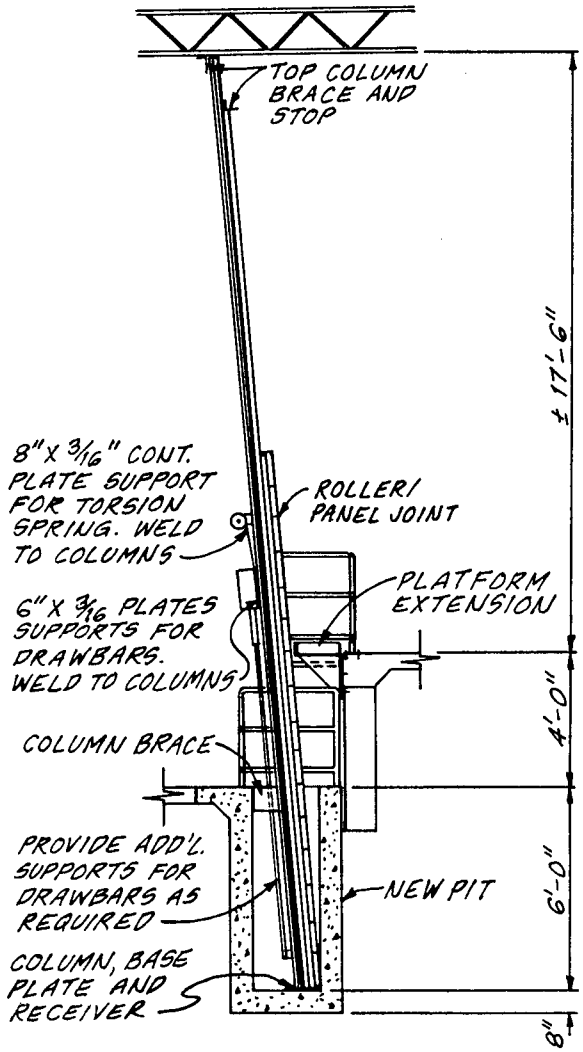

Figure 12. Vertical legend application board.

J.H. Morley, chief, ILDOT Highway Sign Shop, says, "The board will get people off their hands and knees and be much better for their backs. In the summer, some workers spend eight to nine hours crawling on horizontal signs. Working on a vertical surface will be much better for them."

An added benefit is that the new application board allows personnel to step back from the sign to make a quick visual check of letter position, spelling, and overall sign appearance. This is sometimes difficult to do on large, horizontal surfaces.

CONTACT: J.H. Morley, Chief, Highway Sign Shop, Illinois Department of Transportation, Division of Highways, 1135 West Reynolds, Springfield, IL 62702. Phone: (217) 782-5277.

EXTRUSION PANEL EASEL

DESCRIPTION: To fabricate and disassemble extruded panel signs, the Maryland Department of Transportation, State Highway Administration, designed an easel rack that holds the extruded panels at a 15-degree angle on a series of 12 ft (3.7-m) tall, 4-in x 4-in (101.6-mm x 101.6-mm) square posts. As shown in 13, signs rest on several 3-in (76.2-mm) square supports that are attached at an L-angle to each 5-in x 5-in (127.0-mm x 127.0-mm) square steel base, which is sunk into the concrete floor approximately 2 ft (0.6 m). Each extrusion bay consists of eight posts spaced 6.5 ft (1.9 m) apart. The size of the extruded panel sign determines the number of posts to be used.

The cost of the extrusion panel easel is not available because they were included in the cost of a new sign shop.

PROCEDURE: To fabricate a sign, the first extruded panel rests on the base support, and additional panels are stacked on top of each other to the desired height. The panels are attached to the posts with specially designed vise grips, as seen in 14.

To make the sign sturdier, 2-in x 4-in (50.8-mm x 101.6-mm) pieces of wood are post clipped to the back of the panels at 4-ft (1.2-m) to 6-ft (1.8-m) intervals. The sign is now ready for application of the legend.

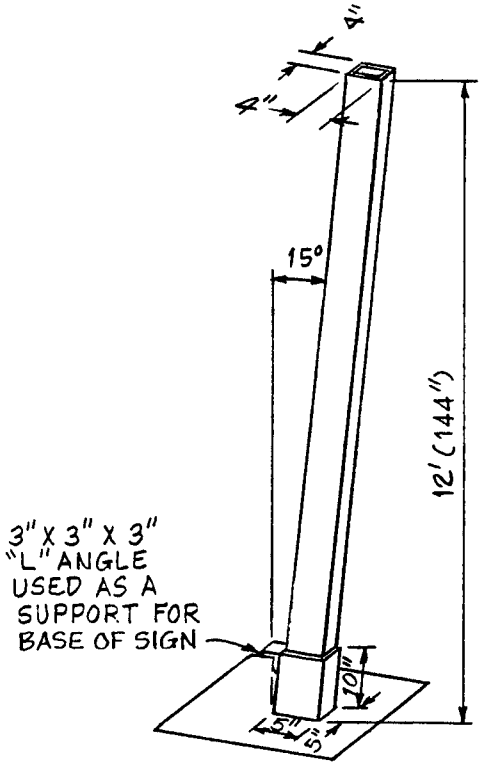

Figure 13. Extrusion panel easel to fabricate and disassemble signs.

BENEFITS: The extrusion panel easel allows workers to bolt extruded panel signs and apply legends while standing up, which is easier on workers' backs and safer than crawling over a sign face that is lying horizontally. With the easel, workers can stand back and see what the sign looks like. Letters are less likely to be misplaced or dropped on an upright sign.

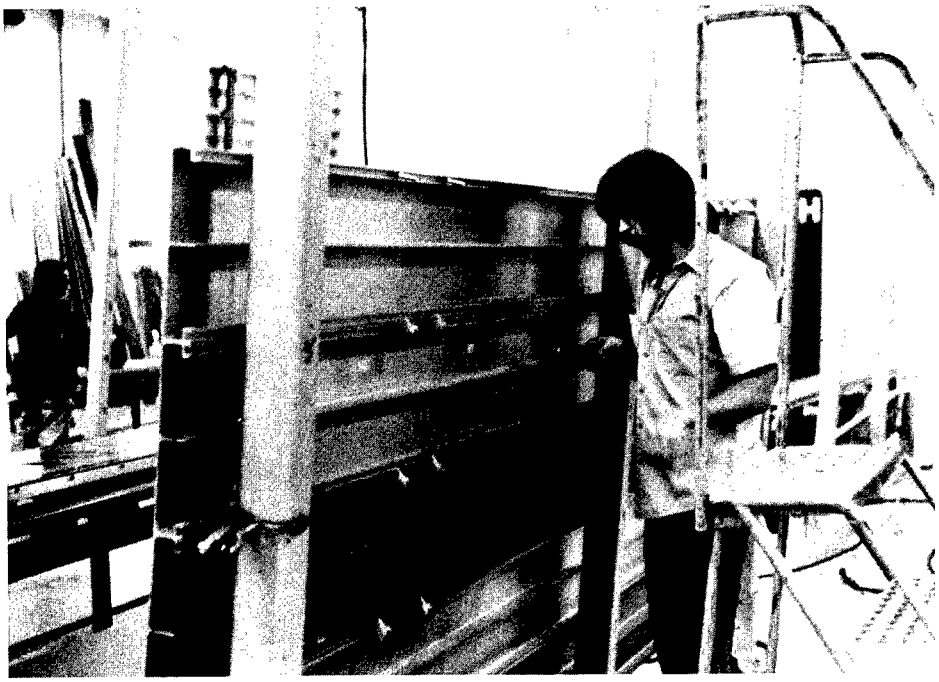

14. Panels are attached to the post with specially designed vice grips (lower left corner).

CONTACT: David Cochran, Sign Operations Supervisor, Office of Traffic, Maryland Department of Transportation, State Highway Administration, 7491 Connelly Drive, Hanover, Maryland 21076. Phone: (301)787-7670

EXTRUSION BRACKET TO LIFT SIGNS

DESCRIPTION: A bracket, used by the Maryland Department of Transportation, State Highway Administration, hooks onto the back of extruded panel signs so that they can be lifted safely by a crane. The bracket, made from 0.05-in x 1.75-in (1.3-mm x 44.5-mm) flat steel, distributes the weight of the sign onto three panels, making lifting much safer than the previous method of using two threaded hooks bolted to the top of the sign.

The bracket, seen in Figure 15, is 34.5 in (876.3 mm) tall and 12 in (304.8 mm) wide. It includes three sets of two hooks spaced 12 in (304.8 mm) apart horizontally. The crane hook at the top is made from .05-in (1.3-mm) round stock. Fabrication and painting cost $197 per unit.

PROCEDURE: As shown in Figure 16, the bracket slides into place at the back

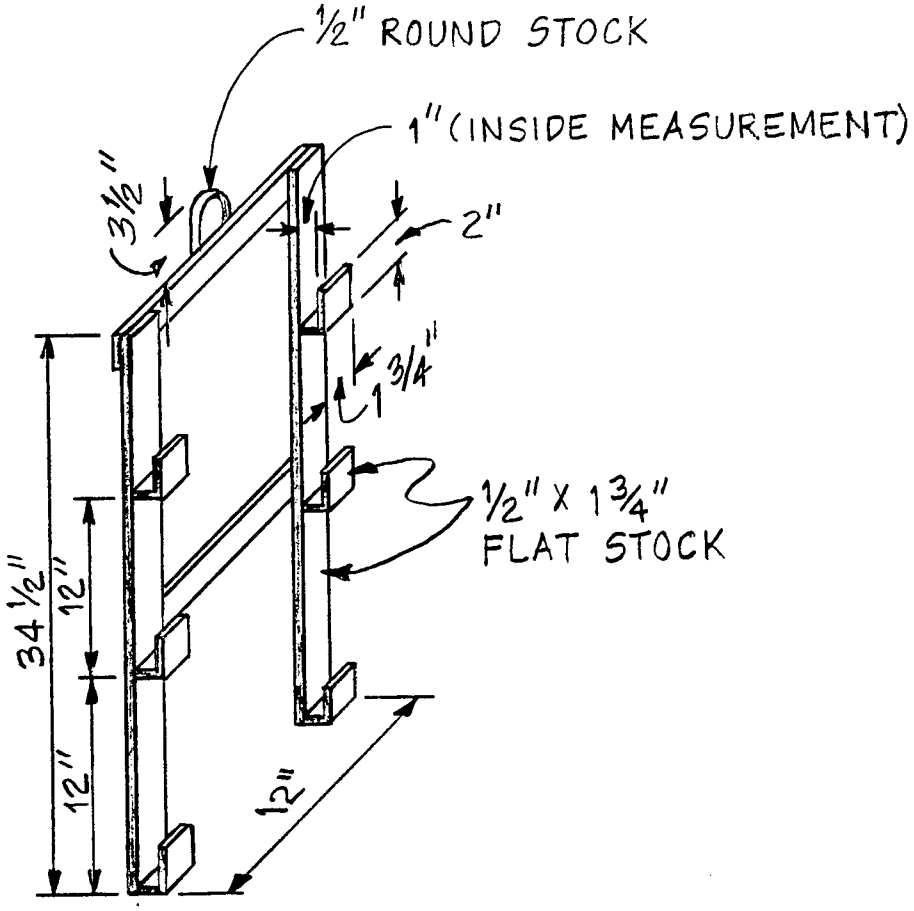

Figure 15. Extrusion bracket to lift signs safely.

of the extruded panel sign that is sitting on an extrusion rack. The bracket is secured to the panels with post clips, and the sign is lifted by a crane.

BENEFITS: The extrusion bracket, which costs $197, is easy to construct. It distributes the weight of the sign evenly so that it can be lifted safely by crane.

CONTACT: David Cochran, Sign Operations Supervisor, Office of Traffic, Maryland Department of Transportation, State Highway Administration, 7491 Connelly Drive, Hanover, Maryland 21076. Phone: (301)787-7670.

Figure 16. Bracket slides into place at the back of the extruded panel sign.

SKIDS TO STORE METAL SIGN BLANKS

DESCRIPTION: Because wooden skids cracked and tore apart from the weight of metal sign blanks, the sign shop of the Maryland Department of Transportation, State Highway Administration designed a metal skid that holds signs at a 75-degree angle. As shown in Figure 17, the stacking skid, 26.25 in (666.8 mm) wide x 32 in (812.8 mm) deep x 39 in (990.6 mm) tall, holds the sign blanks against a 26-in x 32-in x .125-in (660.4-mm x 812.8-mm x 3.2-mm) galvanized aluminum support board. Rivets and hinges hold the board to the framework of the skid.

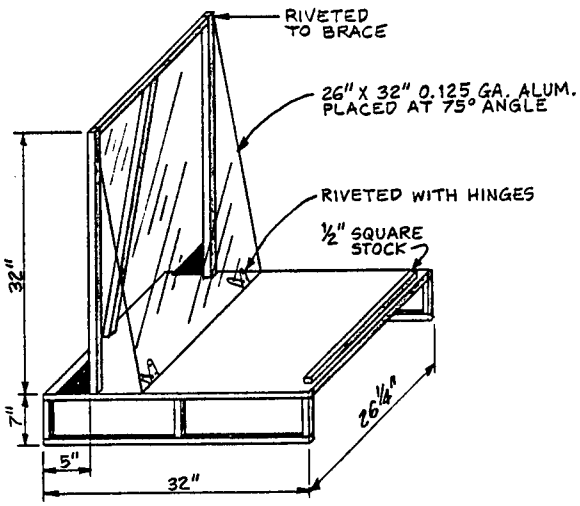

Figure 17. Stacking skid to store metal sign blanks.

The framework is constructed from 1-in x 1-in (25.4-mm x 25.4-mm) steel tubing. A piece of .5-in (12.7-mm) square stock at the front of the base plate stops signs from sliding off the skid. The stronger metal stacking skid prevents the signs from being stacked too tightly and falling over.

PROCEDURE: Metal sign blanks are stacked at a 75-degree angle against an aluminum panel as shown in Figure 18.

Figure 18. Modified skid where metal sign blanks are stacked at a 75-degree angle.

BENEFITS: The stacking skids allow signs with retroreflective sheeting to be stored safely, conveniently, and properly, standing up at a 75-degree angle.

Signs do not fall over from being stacked tightly in an upright position or from deterioration of an overloaded wooden skid. The metal skids were fabricated by a vocational technical school for approximately $60 each. Using metal instead of wooden skids reduced maintenance costs.

CONTACT: David Cochran, Sign Operations Supervisor, Office of Traffic, Maryland Department of Transportation, State Highway Administration, 7491 Connelly Drive, Hanover, Maryland 21076. Phone: (301)787-7670.

SILK-SCREEN WASH BAY MODIFICATION

DESCRIPTION: To speed disposal of xylene and mineral spirits runoff from one silk-screen wash bay, the Maryland Department of Transportation, State Highway Administration (MDSHA) sign shop added a second drainage pipe and two valves to the drainage system. As shown in Figure 19, the new pipe leads to a second drainage barrel. The drainage system consists of one 2-ft (0.6-m) pipe, two 1-ft (0.3-m) pipes, four 90-degree elbows and two no-gasket, metal-to-metal, solvent-resistent valves. The cost was approximately $80.

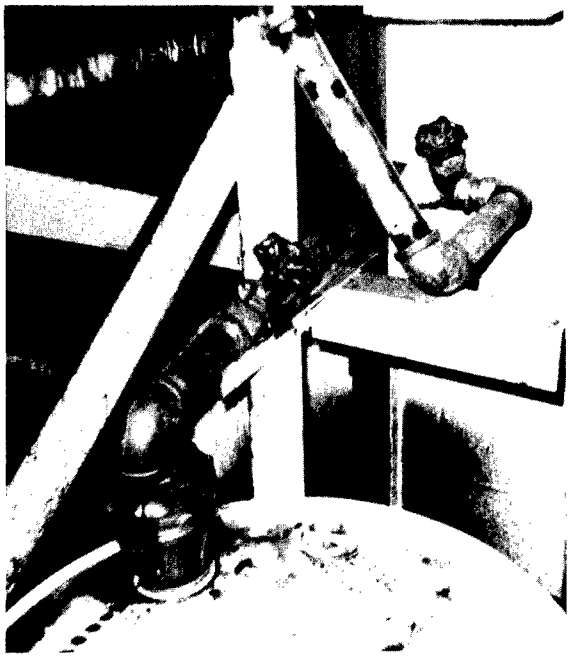

Figure 19. Silk-screen wash bay drainage system.

Depending on the chemical being used, the appropriate valves are turned on and off. The double-headed drainage system speeds the process of changing from one chemical to the other. As shown in Figure 20, previously with each change from xylene to mineral spirits and vice versa, the appropriate disposal drum had to be moved under the single drainage pipe.

Figure 20. Silk-screen wash bay drainage system showing disposal drums.

PROCEDURE: When a silk screen with 800-series ink is washed with xylene, the valve leading to the disposal drum of xylene is open and the valve to the mineral spirit drum is closed. When screens with oil-based inks are cleaned with mineral spirits, the process is reversed.

BENEFITS: The two-valve drainage system on the silk-screen wash bay has helped productivity. David Cochran, sign operations supervisor, Office of Traffic, MDSHA, says, "The old process with only one drainage pipe was time-consum-

ing. Every time you used one or the other chemical, you had to stop and move the drums. Lifting the 55-gallon (208.2-l) drums that were partially filled with chemicals was hurting worker's backs. The new system is much safer."

CONTACT: David Cochran, Sign Operations Supervisor, Office of Traffic, Maryland Department of Transportation, State Highway Administration, 7491 Connelly Drive, Hanover, Maryland 21076. Phone (301)787-7670.

SIGN SUBSTRATE RECYCLING

DESCRIPTION: Approximately 60 percent of the 67,000 signs produced annually by the Illinois Department of Transportation (ILDOT) sign shop are made from reclaimed substrate materials, including all signs 24 in (609.6 mm) and smaller. ILDOT uses both 0.080-in (2-mm) and 0.125-in (3.2-mm) aluminum sign blanks. The 0.125-in (3.2-mm) aluminum is used for signs over 9 ft^2 (0.8 m^2) which accounts for approximately 20 percent of their sign production.

PROCEDURE: As signs are delivered to the districts, old signs are picked up, brought back to the sign shop, sorted, straightened with a roller, and stored for future use. The recycling process utilizes a sign abrader, shown in Figure 21, that uses 24-grit and 36-grit sand belts on the front (working) head and 100-grit belts on the second (finish or polish) head. A conveyor belt moves signs through the abrader.

ILDOT alternates high intensity and engineering grade sheeting to help keep belts clean. The heat generated seems to make the thicker plastic coating from high intensity sheeting stick to the sand belt. By alternating grades of sheeting and using belt lube, ILDOT gets 16,000 to 22,000 ft^2 (1488 to 2046 m^2) from a single belt, depending on the age of the substrate being recycled.

To avoid oxidation, blanks are usually not completely sanded before the sheeting is applied. However, in some cases

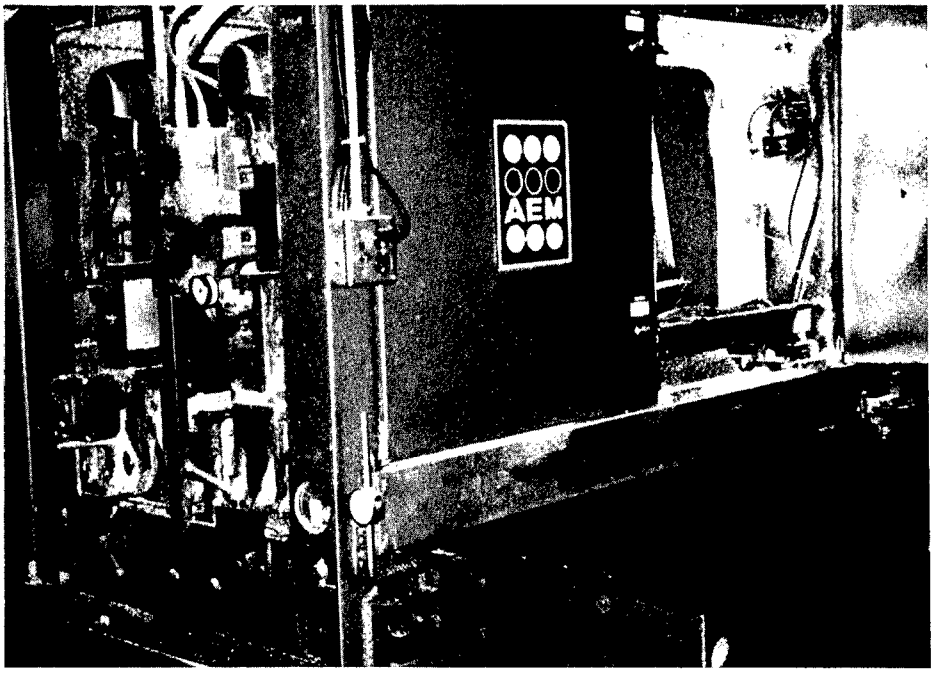

Figure 21. Sign abrader used during recycling process.

the initial sanding (24- and 36-grit belts) is done ahead of time, but the finish sanding (100-grit belt) is delayed until the sign blank is ready for sheeting application.

Residue from the abrader is piped into a dust collector outside the building. To prevent the loss of heat in the winter, the heated air is returned through a series of filters. In the summer, the heated air is exhausted outside, as shown in Figure 22.

BENEFITS: The primary benefit of the ILDOT refurbishing process is the production of approximately 40,000 of its 67,000 annual signs from reclaimed substrates.

The recycling process does not significantly diminish blank thickness. ILDOT personnel estimate that they can use a single sign blank for up to 8 to 10 applications.

By recirculating the filtered air in the winter and exhausting the heated air in the summer, the heating and cooling system in the sign shop runs more efficiently. J.H. Morley, chief, ILDOT Highway Sign Shop, says, "There's actually a heat gain in the winter."

CONTACT: J.H. Morley, Chief, Highway Sign Shop, Illinois Department of Transportation, Division of Highways, 1135 West Reynolds, Springfield, Illinois 62702. Phone: (217) 782-5277

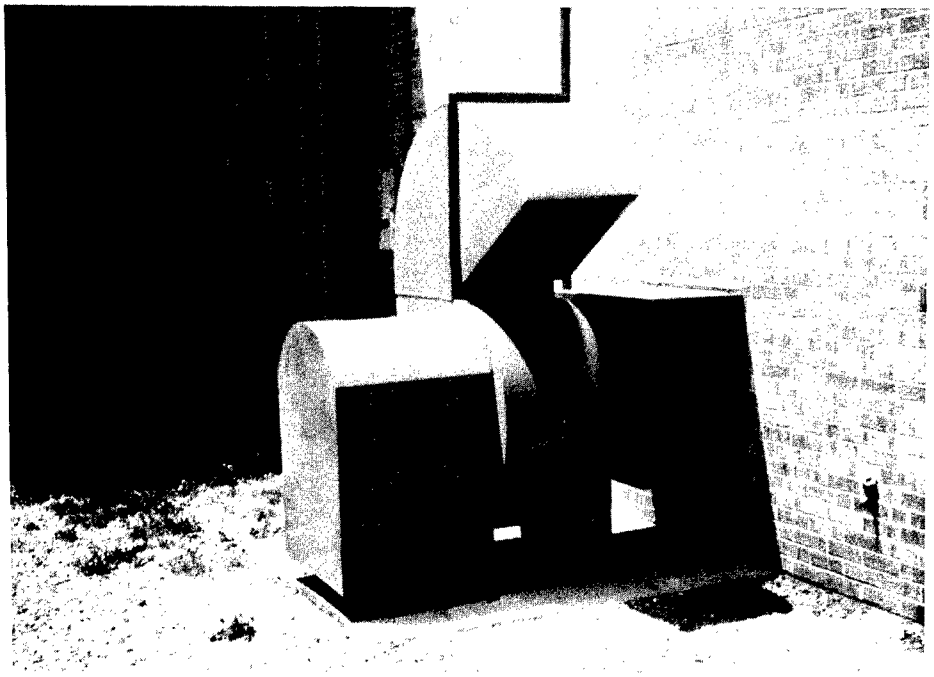

Figure 22. Dust collector outside of building.

SIGN RECYCLING FURNACE

DESCRIPTION: An industrial gas furnace will be used by the City of Dallas Department of Transportation to burn retroreflective sheeting off signs while leaving the aluminum substrate intact. The 12-ft x 7-ft x 6-ft (3.7-m x 2.1-m x 1.8-m) furnace was designed for the painting and coating industry to remove, by controlled pyrolysis, the build-up of paints and epoxies. Due to minimal emissions created by the furnace, the Texas Air Control Board determined that the recycling process was exempt from the permit procedures, under the Standard Exemption for heat cleaning devices.

Dallas initially tested two 24-in (609.6-mm) stop signs in the furnace for three hours at 800 °F (427 °C) Only a light coating of ash, which was easily removed, remained where the sheeting had been. Six additional signs were tested, three "High Intensity" grade and three "Engineering" grade retroreflective sheeting, and the results were the same. A third test was performed using 22 24-in (609.6-mm) stop signs, 11 of each grade. Again, only a light coating of ash remained.

The City of Dallas also tested sand blasting to remove retroreflective sheeting, but the costs were too high, and the process removed part of the aluminum substrate with the sheeting.

The City of Dallas estimates that operating costs of the furnace will be less than 5 cents per sign. They plan to recycle 200 signs per three-hour cycle in the furnace, which will be operational in June or July 1991.

PROCEDURE: Signs will be attached to a rack and loaded into the furnace. The furnace will be heated to 800 °F (427 °C). After three hours, the signs will be removed and cooled. The light coating of ash will be wiped off with a rag. The ash dust, which will be minimal, will be collected and disposed of properly, according to the guidelines of the Environmental Protection Agency.

Retroreflective sheeting can then be applied to the recycled signs as it is on new sign blanks.

BENEFITS: The initial cost of purchasing and installing the furnace will be approximately $30,000. Operating costs are estimated at less than 5 cents per sign. The projected annual savings by salvaging 5000 signs is estimated to be $32,000. Controlled pyrolysis is an inexpensive, efficient method of removing retroreflective sheeting.

CONTACT: Hon-Leung Chan, Manager, City of Dallas Transportation Department, Traffic Field Operations, 3204 Canton Street, Dallas, Texas 75226 Phone: (214) 670-4654.

ALUMINUM SIGN BLANK RECYCLING PROGRAM

DESCRIPTION: The Washington State Department of Transportation (WSDOT) District 5, Yakima, Washington, teamed with the Department of Corrections in Walla Walla, Washington, to establish a fast, economical way to reuse sign blanks when the sign faces have worn out or have been destroyed by vandalism. WSDOT had tried chemical strippers, touch sanding, and various other techniques, and all were unsatisfactory.

Therefore, WSDOT developed a proposal for a self-run recycling program that would include a straightener and an industrial sander, equipment to flatten bullet holes and other damage, and materials for the application of acrylic wax to protect freshly sanded surfaces. When WSDOT discovered that the equipment costs and manpower needs for setting up a recycling process were too high to support a part-time operation, they approached the Department of Corrections with the idea of setting up a sign recycling operation.

A market study, done by the Department of Corrections, indicated a large potential market outside of WSDOT, which would allow them to run a full-time recycling operation. WSDOT District 5 worked with the Department of Corrections to get the bugs out of the system. Figure 23 shows before and after pictures of a sign that has been recycled.

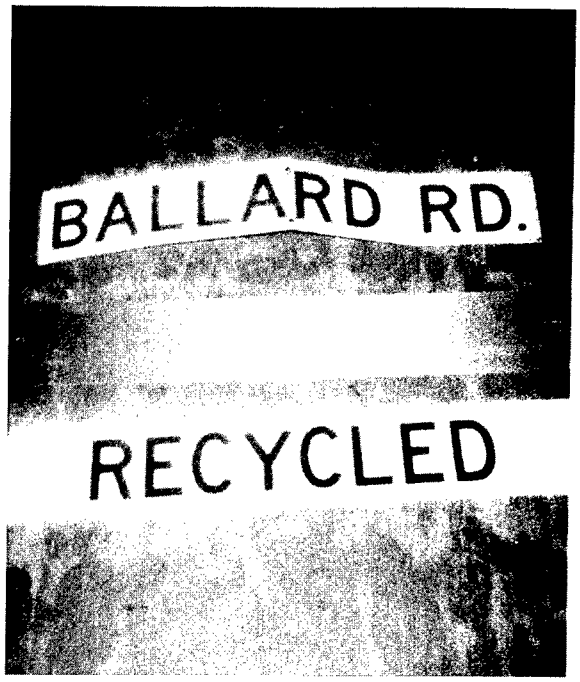

Figure 23. Before and after of a recycled sign.

PROCEDURE: WSDOT picks up used and obsolete signs from all State district yards, sorts signs according to size, and places them on pallets at the central sign shop for pick-up by the prison. On average 10,000 ft^2 (930 m^2) of aluminum signs are picked up each week. Next, the signs are sorted in an open area outside the prison sign shop by type of damage, (bullet holes, bends), and by size. Inside the sign shop, inmates feed the signs into a wet abrasive sander, which strips off the reflective sheeting. A different belt is used to smooth the aluminum, which is then treated so that it does not oxidize. A two-ton punch press removes dents and bullet holes, and a straightening machine straightens the signs. If a different size is desired, the refurbished sign blanks are resized with a metal shear. After a seal coat has been

applied, the sign blanks are ready for reuse by WSDOT.

BENEFITS: Annual savings are estimated at $50,000. In the first three months of recycling, 74,856 ft^2 (6,962 m^2) of aluminum was recycled at a cost of $41,171. New aluminum would have cost $138,484, making the initial savings from recycled aluminum, $97,313. New aluminum costs an average of $1.85 per ft^2; the recycled aluminum costs 55 cents per ft^2. By using recycled aluminum, WSDOT has lowered sign costs to all districts.

Turnaround time is faster and more economical because WSDOT does not need to shear aluminum for uncommonly-used signs. George Hilsinger, District 5 Traffic Engineer, WSDOT, says, "By recycling, we are not only preserving our natural resources, but also curbing the aluminum shortage and reducing our aluminum sign costs. The recycled aluminum has made it easier to have several sizes of sign blanks, which reduces the time spent shearing metal by our sign technicians to meet certain less commonly used sizes."

The prison benefits as well because the recycling operation provides work for inmates and a new service, aluminum recycling, to sell to eligible tax-supported or non-profit agencies.

CONTACT: Annette Anderson, Sign Shop Manager, Washington State Department of Transportation, P.O. Box 12560, Yakima, WA 98909-2560. Phone: (509)454-4107.

DISPOSAL OF SCRAP and SCREENING ROOM MATERIALS

DESCRIPTION: The Illinois Department of Transportation (ILDOT) has adopted a new procedure for disposing of aluminum scrap material. The procedure improves the efficiency of disposal of these materials and substantially increases revenues produced by their sale.

Also, ILDOT uses cloth rags instead of paper towels in their screen cleaning operations. The cloth rags are picked up and cleaned by a uniform cleaning service. This cost-effective procedure eliminates having to store and dispose, by some special means, of paper towels that have been soiled with screen cleaning chemicals.

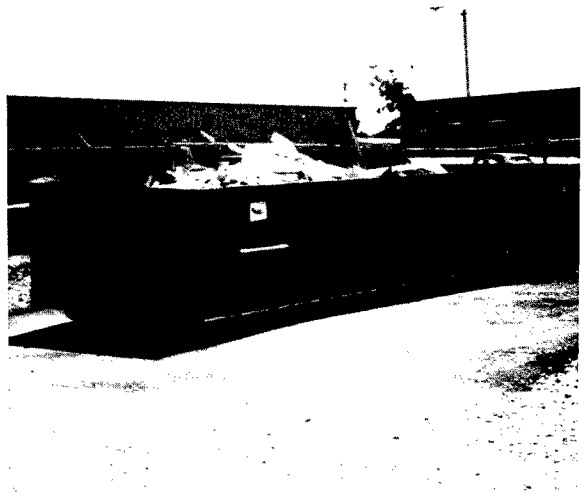

Figure 24. Dumpster filled with scrap awaiting pick-up by outside vendor.

PROCEDURES: ILDOT utilizes outside vendors to dispose of scrap materials. Under the old procedure, a vendor did not receive a contract for the removal of scrap materials until 60 to 90 days after having submitted a bid. This delay, given widely fluctuating scrap metal prices, forced the vendor to submit a bid substantially below current market price for self-protection.

Under the new procedure, bids are taken annually to determine the vendors handling costs including a large on premise dumpster. When the dumpster is full, as shown in Figure 24, the agency notifies the vendor that the scrap material is ready for pickup. At this point the vendor weighs and empties the dumpster, consults the daily American Metal Index price, deducts the fixed handling costs, and pays the difference to the ILDOT. The vendor can sell the material immediately to cover the cost, plus profit margin, or, if the vendor feels market prices will increase, he or she can hold the scrap until a later date in hope of increasing profit. In either event, ILDOT receives revenue based on current American Metal Index prices minus a small amount for handling.

The cloth screening room rags are deposited in a wire basket suspended inside a water filled metal barrel, which allows the rags to drain, as shown in Figure 25. The cleaning service picks up the used rags on a regularly scheduled basis.

BENEFITS: The present procedure for disposing of scrap materials is efficient and cost effective. This procedure allows ILDOT to receive revenue from the sale

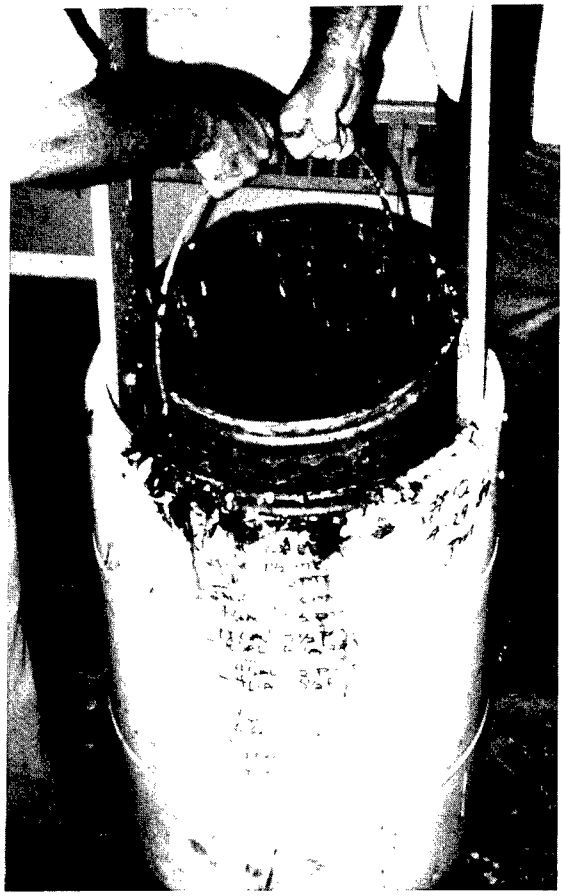

Figure 25. Soiled cloth rags in wire basket inside metal barrel.

of scrap material at a few cents below current market price. Revenue from scrap metal sales exceeded $45,000 in 1989.

Sign shop personnel feel that using cloth rags cleaned by a uniform cleaning service is cost effective. The shop uses 50 to 60 rags per week with a cleaning cost of 8 cents per rag. Under this system, a small amount of used mineral spirits is the only chemical that has to be disposed of by special means.

CONTACT: J.H. Morley, Chief, Highway Sign Shop, Illinois Department of Transportation, Division of Highways, 1135 West Reynolds, Springfield, IL 62702, Phone (217) 782-5277.

Chapter 3
INSTALLATION

Rigid-Mount Street Name Sign Assembly
Bracket for Span Wire Mounting
Back-To-Back Sign Mounting Bracket
Double Chevron Mounting Procedure
Keeper Plates for Structural Steel Breakaway Sign Supports
Hydraulic Guidepost Driver and Puller
Shovel for Post Hole Debris & Chisel Safety Holder

RIGID-MOUNT STREET NAME SIGN ASSEMBLY

DESCRIPTION: A rigid-mount street name sign assembly is used by the Department of Public Works, Monroe County, New York to cut down on vandalism and allow sign assemblies to be reused with only minor repairs when a post is hit.

The materials needed for one street name sign bracket include: four 8-in (203.2-mm) wide sign blanks, one 2-in (50.8-mm) pyramid cap, one 2-in x 2-in x 17-in (50.8-mm x 50.8-mm x 431.8-mm) square tube, one 1 3/4-in x 1 3/4-in x 12-in (44.5-mm x 44.5-mm x 304.8-mm) square tube, eight 3/8-in (9.5-mm) drive rivets, and four 3/16-in (4.8-mm) stainless steel pop rivets.

PROCEDURE: Sign blanks are cut to size, cornered with two 7/16-in (11.1-mm) diameter holes punched along the vertical centerline of each blank. One hole is located approximately 1 in (25.4 mm) from the top and the other hole, 1 in (25.4 mm) from the bottom. Two signs are positioned back to back. Two holes are drilled, and 3/16-in (4.8-mm) diameter pop rivets are installed along the horizontal centerline approximately 1/2 in (12.7 mm) from the edges of the sign.

Next, the two joined signs are wedged apart at the center with a homemade wedge, made from a 2-in x 2-in x 9-in (50.8-mm x 50.8-mm x 228.6-mm) square tube and a 1 3/4-in x 1 3/4-in x 8-in (44.5-mm x 44.5-mm x 203.2-mm) square tube. The 2-in (50.8-mm) tube is cut 4 in (101.6 mm) on opposite sides of the tube. It is then compressed to form a flat point. The 1 3/4-in (44.5-mm) tube is then inserted 5 in (127 mm) into the 2-in (50.8-mm) tube. The two pieces are then bolted together with a 3/8-in x 3-in (9.5-mm x 76.2-mm) bolt. (See Figures 26 and 27.)

Next, the 1 3/4-in x 1 3/4-in x 12-in (44.5-mm x 44.5-mm x 304.8-mm) square tube

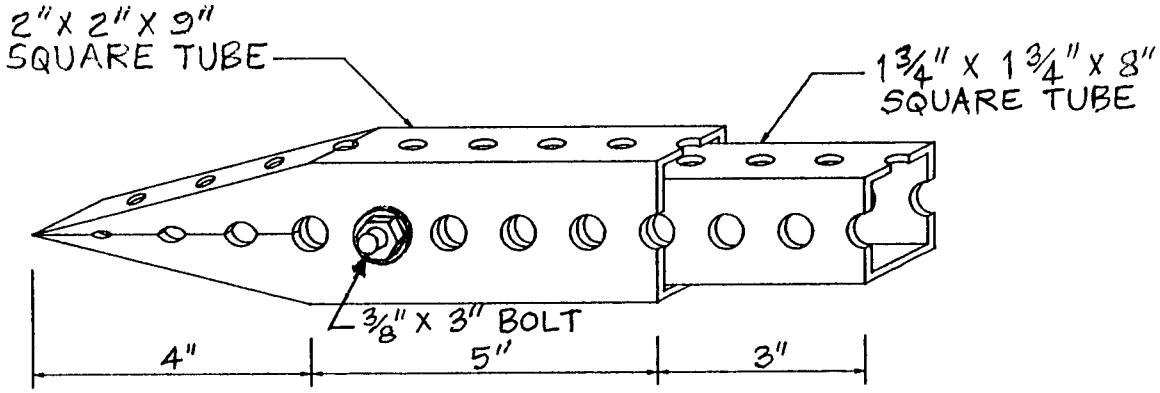

Figure 26. Homemade wedge to pry apart two joined signs.

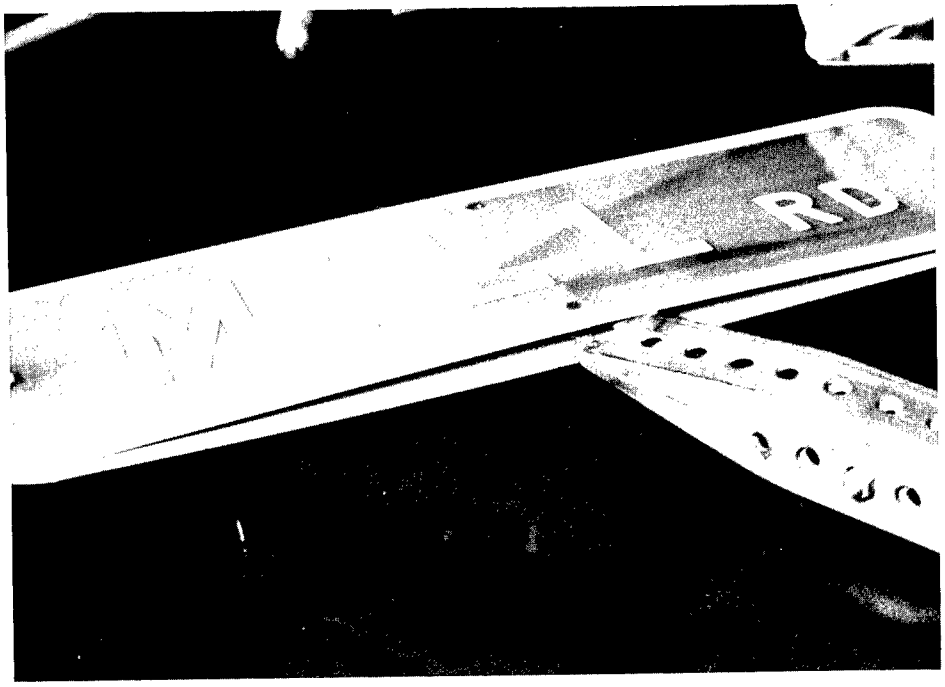

Figure 27. Two joined signs are wedged apart at the center with homemade wedge.

is positioned in a vice with a 3/8-in x 4-in (9.5-mm x 101.6-mm) pin placed through the tube 6 in (152.4 mm) from the bottom. The 2-in (50.8-mm) square tube is then slipped over the 1 3/4-in (44.5-mm) tube, which is prevented from slipping completely over the 1 3/4-in (44.5-mm) tube by the pin, as shown in Figure 28.

The 1 3/4-in (44.5-mm) edge of the homemade wedge with signs attached is slipped into the top of the 2-in (50.8-mm) tube. The back-to-back signs are then shimmied down the wedge over to the 2-in (50.8-mm) tube, stopping at the pin. (See Figure 29.) Another pin is inserted through the previously drilled 7/16-in (11.1-mm) holes to anchor the signs in place. Next, a second set of back-to-back signs is added to the 2-in (50.8-mm) tube, using the wedge again. (See Figure 30.) The pins are then removed and the 3/8-in (9.5-mm) diameter drive rivets and the 2-in (50.8-mm) pyramid cap are installed.

The sign bracket is now ready to be installed onto permanent posts. (See Figure 31.)

BENEFITS: The rigid-mount street name sign assembly cuts down on vandalism. Previously, street name signs were attached onto extruded tubes with standard hardware. This hardware was easier to remove than the drive rivets used for rigid-mount sign assembly.

Another benefit is that, in many cases, if a post is hit by a vehicle with this bracket attached, the sign assembly can be taken off the damaged post and reused with only minor repairs to the assembly.

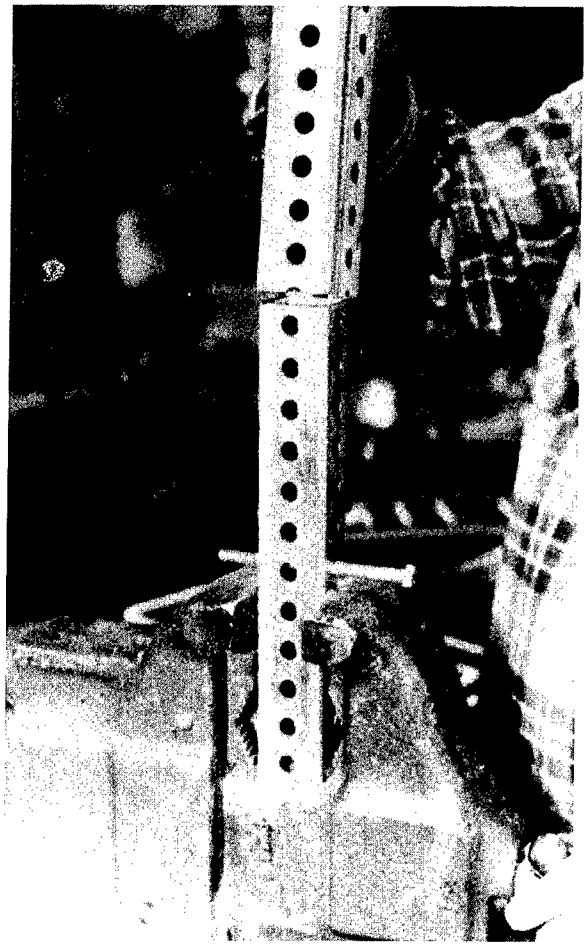

Figure 28. Pin prevents larger tube from slipping completely over the smaller tube.

Figure 29. Back-to-back signs are shimmied down the wedge.

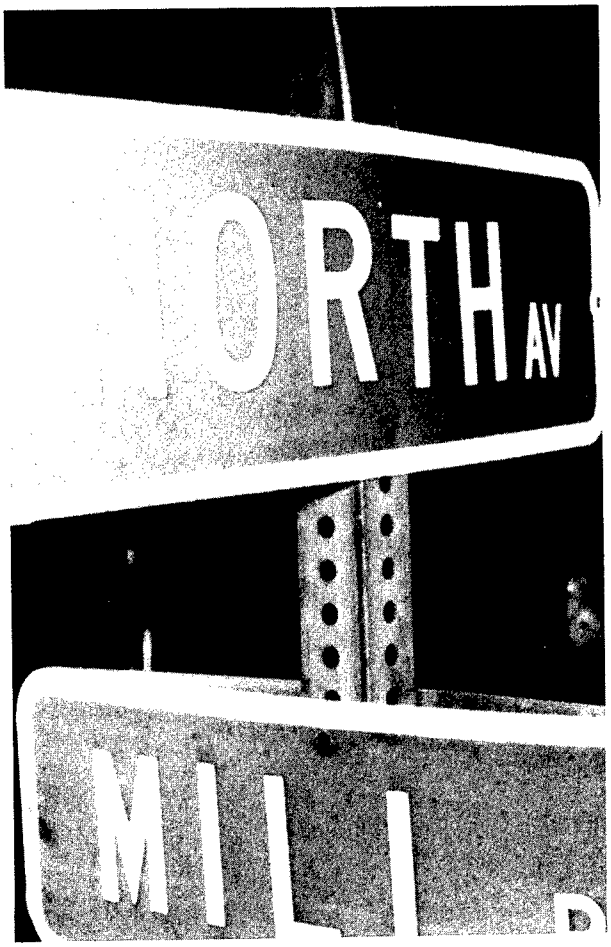

Figure 30. A second set of back-to-back signs is added to the 2-in (50.8-mm) tube.

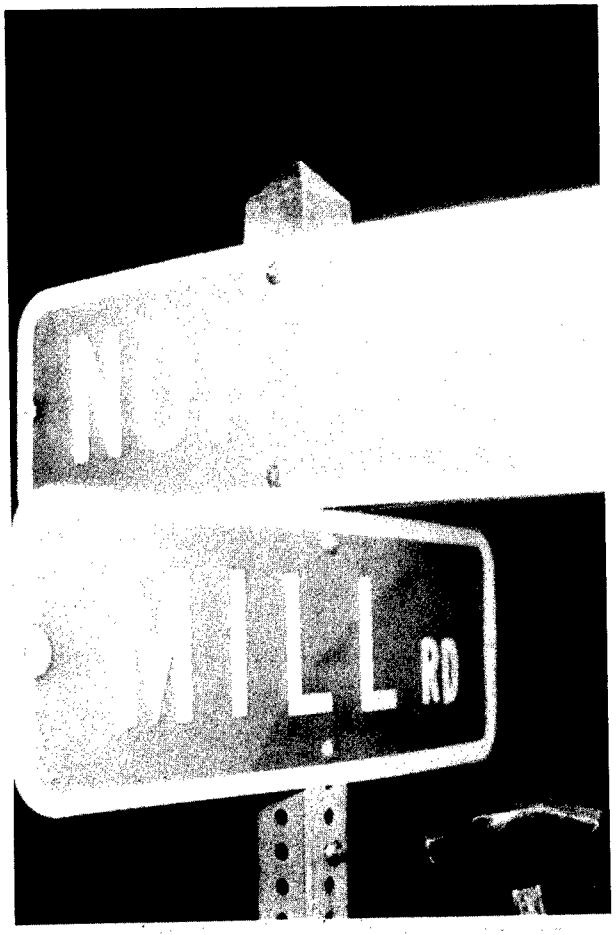

Figure 31. Sign bracket ready for installation on permanent posts.

Also, the sign assembly can be incorporated onto other sign assemblies simply by adding the bracket to the top of the sign post.

Because the bracket uses short-length square posts, Monroe County Department of Public Works can utilize salvaged posts, which saves money.

CONTACT: Lawrence Burns, Sign Installation Foreman, Monroe County Department of Public Works, Highways and Traffic Engineering Division, 350 East Henrietta Road, Rochester, New York, 14620. Phone: (716) 273-7930. A pamphlet illustrating this procedure is available.

BRACKET FOR SPAN WIRE MOUNTING

DESCRIPTION: A span wire mounting bracket was devised to prevent side-to-side movement of signs, and to eliminate damage from collisions with adjacent signal heads. The bracket, which can be adjusted for mounting signs on skewed or diagonal span wire, (Figure 32) was designed by Paul Broussard, Signal Maintenance Technician with the Beaumont (District 20) signal shop of the Texas State Department of Highways and Public Transportation.

The bracket includes one standard three-bolt 5/16-in (7.9-mm) cable clamp, one 2 1/2-in (63.5-mm) section of a 2 1/2-in x 1/4-in x 2 1/4-in (63.5-mm x 6.4-mm x 57.2-mm) aluminum angle, one 7/16-in x 1-in (11.1-mm x 25.4-mm) cadmium- or zinc-plated bolt, and four 7/16-in x 1 1/2-in (11.1-mm x 38.1-mm) round-head bolts with square-head nuts. These parts are all commercially available.

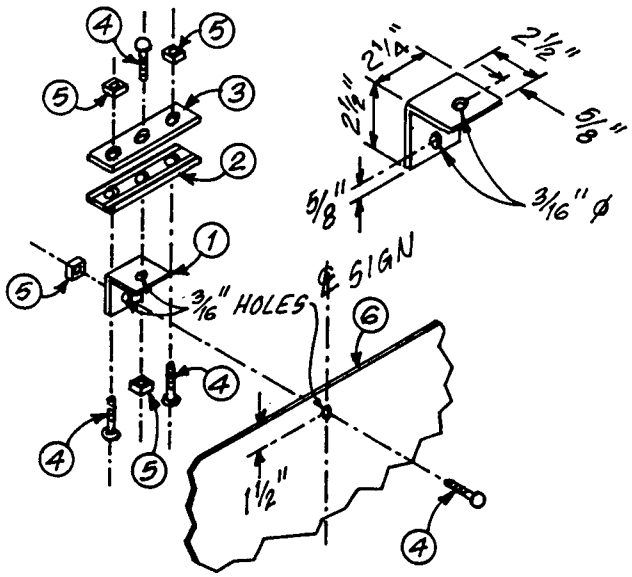

PART #	DESCRIPTION
1	L 2 1/2" X 2 1/2" X 1/4" X 2 1/4" (ALUMINUM)
2	STD. 3-BOLT 5/16" SPAN CABLE CLAMP (BOT.)
3	STD. 3-BOLT 5/16" SPAN CABLE CLAMP (TOP)
4	7/16" X 1 1/2" ROUND HEAD BOLT
5	7/16" SQUARE HEAD NUT
6	SPAN WIRE MOUNT SIGN

Figure 32. Exploded view of the span wire mounting bracket.

PROCEDURE: As shown in Figure A, the cable clamp (2) and (3) is secured to the span wire. The sign (6) is fastened to the inside at one extension of the angle bracket (1) on one extension and then is mounted by attaching the outside of the other extension to the center of the cable clamp.

BENEFITS: Before using the Broussard-designed bracket, the Beaumont signal shop experienced unrestricted side-to-side movement of signs in windy conditions. This frequently resulted in damaging collisions between signs and signal heads. Maintenance needs were increased because signs and signal visors had to be replaced long before the parts were scheduled for replacement. Since the Beaumont signal shop has installed the sign-mounting bracket throughout the district, there have been no problems with side-to-side sign movement.

"We haven't had to replace any signs from wind destruction and storms. The new bracket has reduced maintenance needs from wind damage to just about zero," says Broussard. He adds that the cost of the bracket is low because all components are bought off-the-shelf.

An unexpected benefit is that the sign bracket does not strain the sign face, unlike the previous type of bracket the signal shop used.

CONTACT: Paul Broussard, Engineer Technician III, Texas State Department of Highways and Public Transportation, P.O. Box 3468, Beaumont, Texas 77704-3468. Phone: (409) 892-7311 Ext. 275.

BACK-TO-BACK SIGN MOUNTING BRACKET

DESCRIPTION: To mount signs back-to-back, the Missouri Highway and Transportation Department uses a mounting bracket that requires only two bolts and eliminates the need for redrilling signs. Previously, when mounting signs back-to-back on round posts, four clamps were needed and one of the signs had to be redrilled.

The bracket is composed of: one round post clamp and half clamp, one 5/16-in x 2 1/2-in (7.9-mm x 63.5-mm) aluminum clamp bolt with nuts, one 5/16-in x 1-in (7.9-mm x 25.4-mm) aluminum clamp bolt with nuts, one 1 1/2-in (38.1-mm) B-stringer bolt with a 3/8-in (9.5-mm) nut, two fiber washers, one 1 1/2-in x 1 1/2-in x 1 1/2-in (38.1-mm x 38.1-mm x 38.1-mm) aluminum angle piece with two 3/8-in (9.5-mm) drilled holes, and one 1/2-in x 1-in x 6-in (12.7-mm x 25.4-mm x 152.4-mm) flat aluminum bar with one 3/8-in (9.5-mm) hole drilled in the center.

PROCEDURE: A round post clamp and half-post clamp are attached to the round post using the 5/16-in x 2 1/2-in (7.9-mm x 63.5-mm) aluminum clamp bolts (See Figure 33). The sign is attached to the clamp with the 5/16-in x 1-in (7.9-mm x 2 5.4-mm) clamp bolt with a fiber washer. Next, a 1 1/2-in x 1

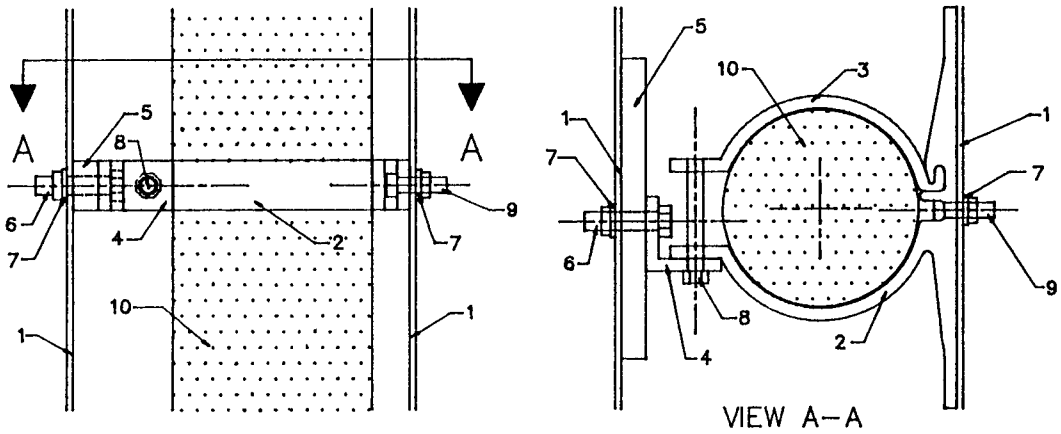

PART #	DESCRIPTION
1.	Sign
2.	Aluminum Post Clamp
3.	Aluminum Half Clamp
4.	Aluminum Angle 1 1/2" x 1 1/2" x 1 1/2"
5.	Aluminum Flat Bar 1/2" x 1" x 6"
6.	B–Stringer Bolt with Nut 3/8" x 1 1/2"
7.	Fiberwasher
8.	Aluminum Clamp Bolt with Nut 5/16" x 2 1/2"
9.	Aluminum Clamp Bolt with Nut 5/16" x 1"
10.	Round Post

Figure 33. Side and top view of back-to-back sign mounting bracket.

1/2-in x 1 1/2-in (38.1-mm x 38.1-mm x 38.1-mm) aluminum angle is attached to the end of the post clamp and half clamp. A 1/2-in x 1-in x 6-in (12.7-mm x 25.4-mm x 152.4-mm) flat aluminum bar is attached to the angle. The second sign is then attached to the bar. At least two brackets are used for each sign.

BENEFITS: This bracket has reduced the costs and labor needed to install signs back-to-back. The number of clamp bolts needed is cut in half, and labor is saved because signs do not have to be redrilled.

CONTACT: Tom Anna, Missouri Highway and Transportation Department, P.O. Box 270, Jefferson City, Missouri, 65102. Phone: (314) 751-2373.

DOUBLE CHEVRON MOUNTING PROCEDURE

DESCRIPTION: To delineate curves, the Texas State Department of Highways and Public Transportation has developed an arrangement in which two chevron signs are mounted on one post. The signs, which face opposing traffic, can be rotated independently from a parallel position to a 58-degree angle relative to each other to achieve the best visibility. (See Figures 34 and 35.)

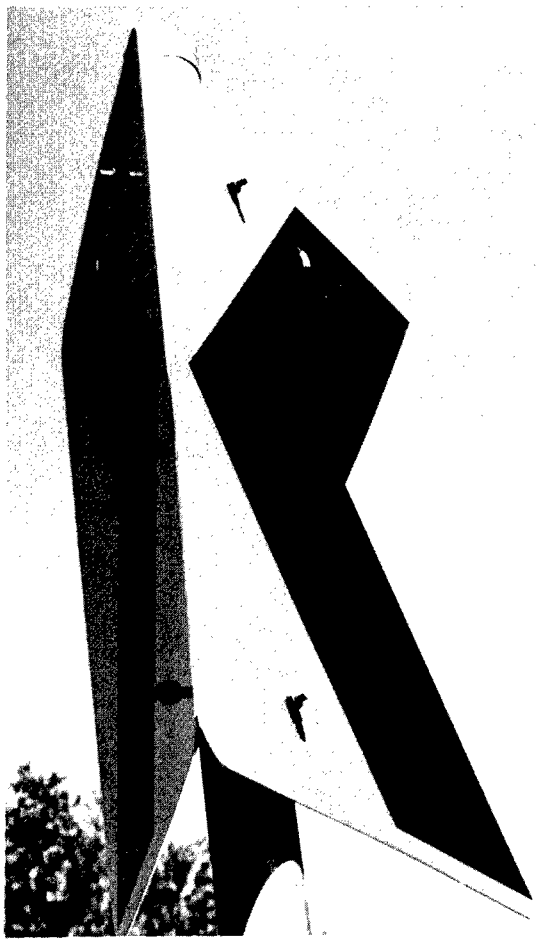

Figure 34. Maximum angle, front.

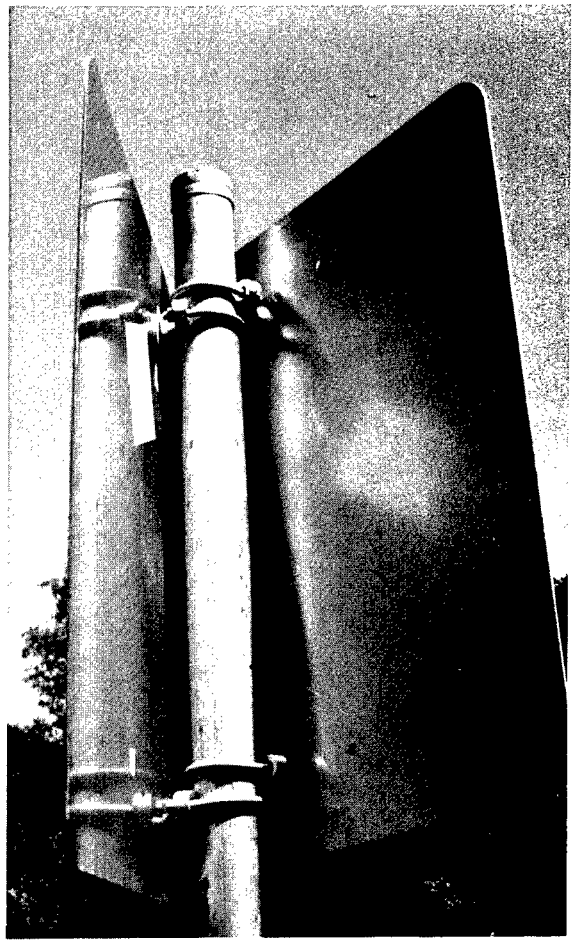

Figure 35. Maximum angle, rear.

This mounting procedure requires half as many posts around a curve, and it can be used with both 12-in x 18-in (304.8-mm x 457.2-mm) and 18-in x 24-in (457.2-mm x 609.6-mm) chevron signs.

PROCEDURE: Two signs are punched off center and are mounted on one post with sign clamps. Two holes are drilled into each sign, 3 inches (76.2 mm) from the top and bottom and 3 inches (76.2 mm) from the edge to which the chevron points, as shown in Figure 36. For sign

posts, the Johnson City Maintenance Section uses a 2-in (50.8-mm) galvanized steel pipe that is set in concrete with a frangible pipe coupling.

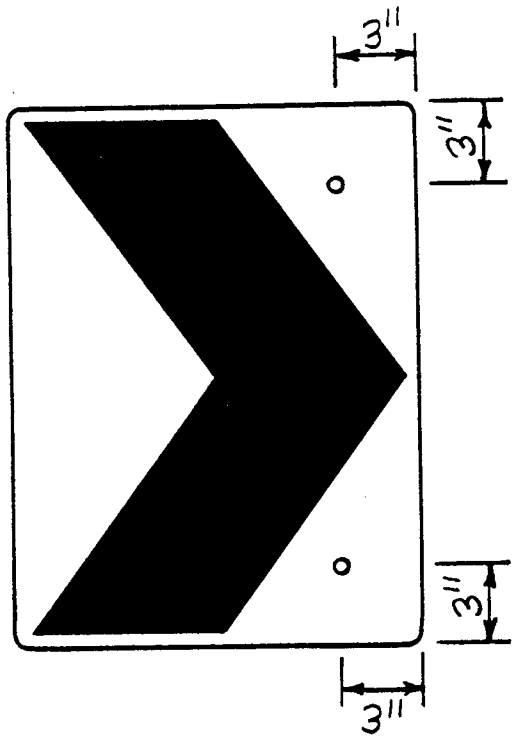

Figure 36. Spacing of the holes.

The first sign is attached with two sign clamps; a second pair of clamps is placed just above the first. One sign will, thus, be slightly higher than the other. This configuration allows the signs to be adjusted so that they can be aimed at oncoming traffic over a wide range of angles.

BENEFITS: The double chevron mounting procedure requires only one post for every two signs, reducing the number of posts around a curve by half. While the mounting method is currently being tested in the field, it is anticipated that the configuration will withstand high winds.

CONTACT: Lewis Rhodes, Administrative Traffic Operations Engineer, Texas State Department of Highways, and Public Transportation, 125 East 11th Street, Austin, Texas 78701. Phone: (512) 465-6330

KEEPER PLATES FOR STRUCTURAL STEEL BREAKAWAY SIGN SUPPORTS

DESCRIPTION: Keeper plates, used by the Michigan Department of Transportation, are installed on structural steel breakaway sign supports to keep the bolts of the base connection in place. When the bolts are not correctly torqued and a keeper plate is not in place, the bolts can loosen and fall out of the connection. When the column is only partially connected to the base, it can move and even leave the base when wind or other forces push against the sign.

The rectangular plate is fabricated from 20-gage galvanized steel. Four holes are drilled into the plate. (See Figure 37.)

PROCEDURE: The keeper plate with shims is placed between the breakaway plates on the steel post and the base. One plate is required per post. See Figure 38 for a side elevation view of placement of keeper plate.

BENEFITS: If bolts loosen, keeper plates retain the bolts on the base connection. Because the keeper plate is thin, it does not interfere with the breakaway feature on the steel post.

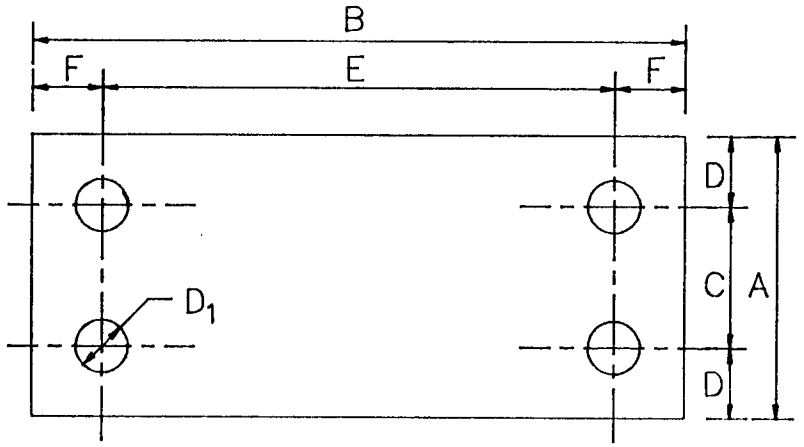

Column Size	A (in)	B (in)	C (in)	D (in)	E (in)	F (in)	D1 (in)
S3x5.7	3	7-1/2	1-1/2	3/4	6	3/4	9/16
S4x7.7	3	7-1/2	1-1/2	3/4	6	3/4	9/16
W8x13	5	12-1/2	2-3/4	1-1/8	10-3/4	7/8	3/4
W8x18	5	12-1/2	2-3/4	1-1/8	10-3/4	7/8	3/4

(1 mm = 1 in x 25.4)

Figure 37. Rectangular plate and dimensions.

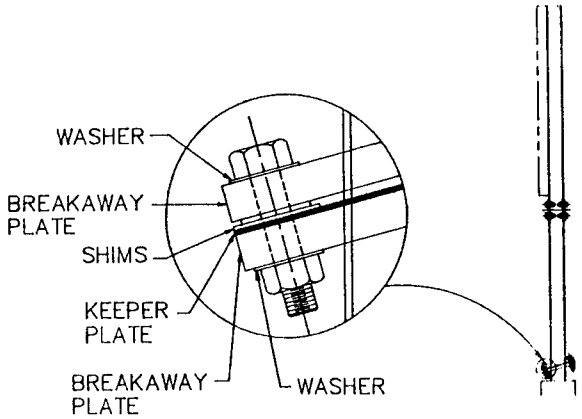

Figure 38. Side elevation view of placement of keeper plate.

CONTACT: Gerald Van Lew, Traffic Services Supervisor, Maintenance Division, Michigan Department of Transportation, Transportation Building, P.O. Box 30050, Lansing, Michigan 48909 Phone: (517) 373-2090.

HYDRAULIC GUIDEPOST DRIVER AND PULLER

DESCRIPTION: An hydraulic guidepost driver and puller, modified by the Canyonville section of the Oregon Department of Transportation Highway Division, can drive wood and standard metal posts. The unit has tripled production over hand or loader driving and pulling.

The driver and puller, shown in Figure 39, are mounted on a removable 60-in x 16-in x 3/8-in (1524.0-mm x 406.4-mm x 9.5-mm) steel platform, designed by the Canyonville Section and made by the local welding shop. The platform is attached to the hitch on the back of a five-cubic-yard truck. The unit is stabilized by chains from the truck body to the platform. A tool box and hydraulic controls on the platform allow easy access to all equipment.

The platform with the driver and puller can be removed or installed by two people in less than five minutes so that the truck can be used for other purposes.

As shown in Figure 40, the 45-lb (20.4-kg) driver sits on a post welded to the driver's side of the platform. It swings out almost 180 degrees on a standard boat winch boom located at the center. The 40-lb (18.2-kg) puller is mounted on the right side. The driver and puller are secured to the truck by chains and locks when the truck is left outside.

A second hydraulic valve was added so that the crew would have access to hydraulics for both units without having to disconnect the hose. At the beginning of the day the hydraulics are turned on. A flow valve circulates the constant pressure on the driver unit so it can be left on all day. The pressure to the puller is turned on and off as required. Because the controls are on the back of the truck, there is no need to return to the cab to turn the hydraulics on and off during the work day. Swivel hooks and rings keep the hoses from getting tangled or pinched.

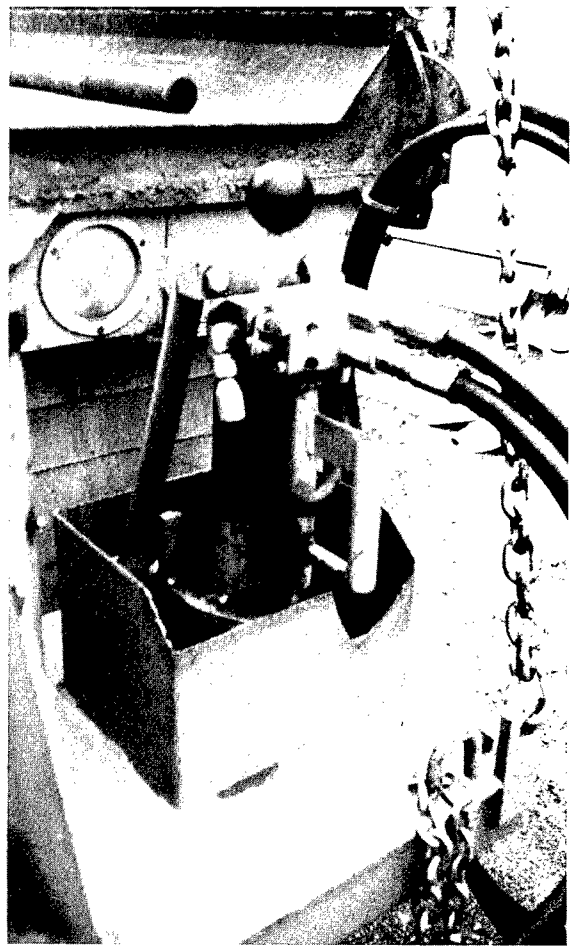

Figure 39. Puller mounted on removable platform.

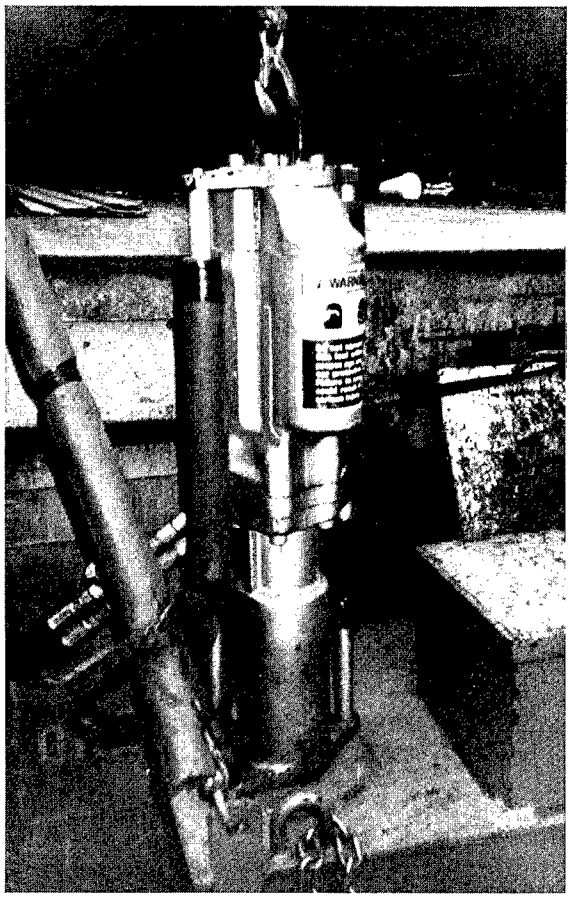

Figure 40. Driver sitting on post welded to the driver's side of the platform.

The driver and puller were purchased for $3,040. The platform and boom were fabricated for $890, including material and labor. Hydraulic controls cost $376; the system cost $507. Two caps were $30. The total cost was $4,843.

PROCEDURE: To drive a post, the crew attaches a driving cap to the top of the post, then guides the driver over the top and keeps it straight while the hydraulics push the post into the ground.

Tools required include a rivet gun, rivets and the targets needed to attach reflectors or reflective sheeting. A hammer and chisel sometimes are used to remove old style reflectors.

The 40-lb (18.2-kg) puller is lifted off the platform and placed on a metal plate, fabricated by a local welding shop. The plate covers the area around the post and prevents the puller from slipping in soft dirt. Then the puller hydraulically jacks the post out of the ground.

BENEFITS: The Highway Division estimates that hydraulic drivers and pullers have tripled production over hand-driving and reduced the number of accidents and injuries. The driver/puller, can handle an average of 80 posts in each eight-hour shift. It can insert posts into virtually any surface, including rock and asphalt, without breaking them.

Sunday Dick, Section Supervisor, Canyonville, reports: "The driver/puller is more easily controlled and safer than using a loader. With the loader, a person held the post while the loader bucket pounded it into the ground. There was no control over the force; therefore, posts that struck an obstacle broke apart. Because the hydraulic driver uses small vibrations, posts do not break."

Jim Deaton, Highway Specialist, Canyonville, says, "This is a real safe way of driving posts. There is very little danger of getting hurt. The means we used before, especially a loader, were very dangerous. Posts broke, and pieces flew out."

With the hydraulic driver/puller, workers can work longer because they do not get tired. Workers are pleased that there is

no danger of straining muscles as there was with hand work and a loader. It has been their experience, however, that eye protection should be required.

The rear-mounted driver and puller can be used on shoulders or anywhere the truck can park. The driver can be guided with only one finger and can even drive posts at a 45-degree angle.

Placement is more uniform because posts are inserted easily at the correct height on the first try, even in rocky areas.

Deaton says, "It's easy, simple, fast. Other units are more complicated. They require too many people and tie up a truck."

CONTACT: Martin G. Havig, P.E., District Manager, State Highway Division, Oregon Department of Transportation, P.O. Box 1048, Roseburg, Oregon 97470 Phone: (503) 440-3405.

SHOVEL FOR POST HOLE DEBRIS & CHISEL SAFETY HOLDER

DESCRIPTION: The chisel safety holder holds a chisel in place safely while the user chips rocks in a post hole, as shown in Figure 41. The modified shovel, made from a small shovel head welded on a T-handle, picks up dirt that the jabbers don't remove from post hole.

Figure 41. Chisel safety holder.

PROCEDURE: The Dickinson County Highway Department, Abilene, Kansas, made the chisel holder from a broken 4-ft (1.2-m) crowbar. The end of the crowbar is cut off to make a 4-ft (1.2-m) chisel. Next, a piece of pipe is slid over the top of the hex bar, and then welded to another rod, about 2 ft long (0.6 m), extending out at a right angle to the chisel so that one person can swing a sledge, and another person can hold the chisel in place while safely out of the way. The chisel holder can also be operated by one person, as shown in Figure 41.

To make the small shovel (shown in Figure 42) for removing debris from a post hole, Dickinson County took an old shovel head and cut a small shovel from it. Next, they welded a 4-ft (1.2-m) T-handle to the shovel stub.

BENEFITS: The chisel holder allows the chisel to be held from a distance of 2 ft (0.6 m). Dick Houser, Sign Technician, says, "If it's a two-man operation, you don't know how good the other man is swinging that sledge. You don't want your fingers in there."

The small shovel is a valuable tool that removes debris from post holes. Houser said, "Out here when it gets dry, there's so much powder that the augers won't bring out of the hole, so we use this little shovel. Crews used to scoop the debris out by the handful. This does the same thing and saves wear and tear on gloves and hands."

CONTACT: James A. Hague, Highway Administrator, Dickinson County Highway Department, Dickinson County Court House, Abilene, Kansas 67410. Phone: (913)263-3093.

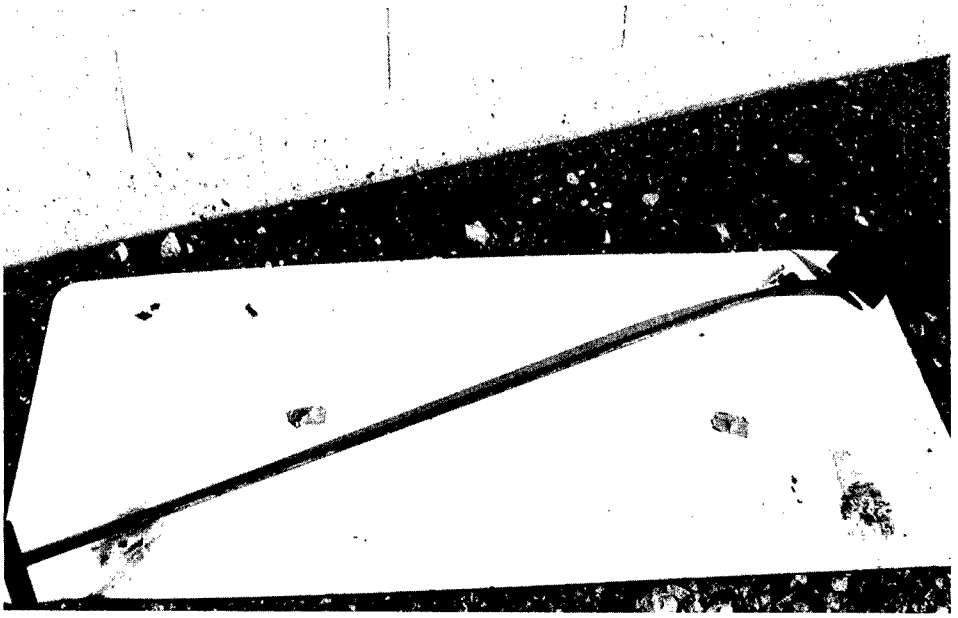

Figure 42. Small shovel to remove debris from post hole.

Chapter 4
MAINTENANCE

All-Purpose Sign Truck with Modifications
Swing-Out Walkway
Portable Step
Tools to Pull Posts: Bear Claw Wooden Post Puller, Pipe Clamps, Pry Bar with Stand, and A-Frame Puller
Tools to Extract Broken Posts
Steel Post Straightener or "Twister Hook"
Sign Identification
Wood Post Anti-Theft Cleat
Sign Vandalism: Public Information Campaign, Miniature Sign Replicas & Public Presentations

ALL-PURPOSE SIGN TRUCK WITH MODIFICATIONS

DESCRIPTION: To transport signs with encapsulated lens sheeting and gain greater flexibility of the auger, the Dickinson County Highway Department, Abilene, Kansas, modified a standard service-body truck. Improvements include a custom-designed storage box and racks and partitions in storage compartments that protect the signs and keep them readily accessible and placement of the auger on the rear passenger side, as shown in Figure 43.

All signs and equipment can be stored in the truck. Racks and partitions prevent the signs from banging into one another, and all signs and equipment are readily accessible. The interiors of the storage compartments are lighted so that the truck is fully operational at night.

The auger rotates 270 degrees and extends 11 ft (3.4 m) from the truck. The rear end of the truck is reinforced to support the added weight and to provide balance. Hydraulic feet are being added to provide stability when the auger is extended the full length.

PROCEDURE: The truck has a 13-ft 6-in (4.1-m) wheel base with standard 9-ft (2.7-m) utility box, which left 2 ft (0.6 m) behind the cab for the custom-designed 24-in (609.6-mm) storage box. The interiors of the storage compartments were designed and built in the sign shop.

The back compartment holds weight limit signs with dimensions of up to 24 x 30 in (609.6 x 762 mm). The next three

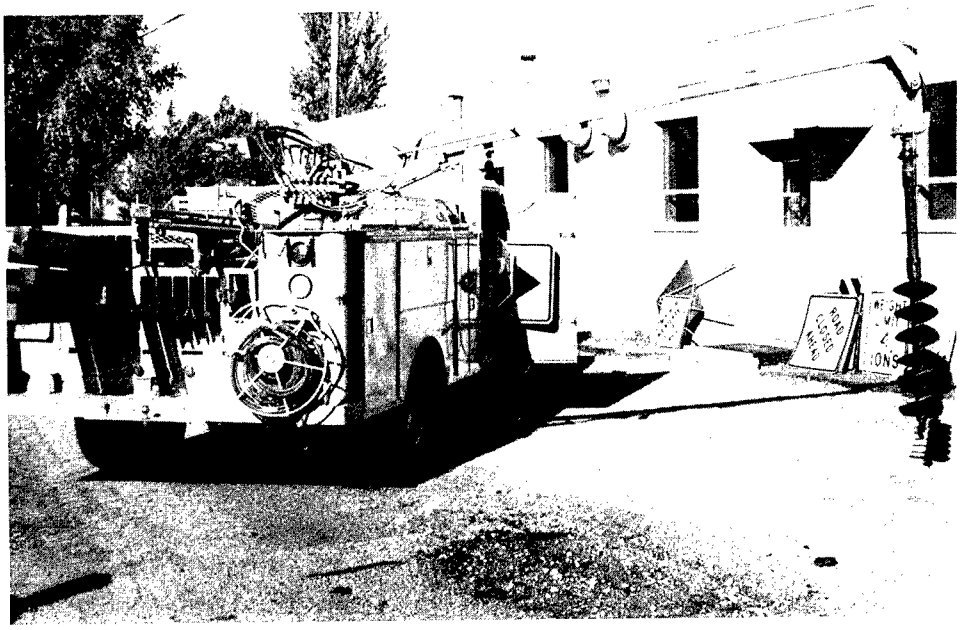

Figure 43. Sign truck with custom-designed storage compartments and auger on the rear of passenger side.

compartments contain 30- x 30-in (762-x 762-mm) warning signs; the next holds 30- x 30-in (762- x 762-mm) stop signs and the compartment up against the cab contains 36- x 48-in (914.4-x 1219.2-mm) double arrows. On the passenger's side, a 36-in (914.4-m) tall bin holds round railroad signs. On the driver's side, a compartment contains object markers type 3, rights, lefts and doubles. A smaller compartment below holds chevrons and four-way stop signs. On top of the chevron box is the hydraulic tank.

To accommodate the extra weight on the right rear side, the sign shop built an extra heavy-duty rear bumper and mounted it on a frame consisting of two 5-in (127-mm) steel pipes which reach up to the top of the service body, as shown in Figures 44 and 45. A piece of 1/2-in (12.7 m) plate is bolted into the top of the service body to stabilize it. An extra leaf was added to the rear spring to balance the truck.

The auger rests in a cradle across the top of the truck bed. It is swung out manually and is guided by a rope. The auger is released from a loop retainer on the boom so that it drops straight down. The boom can be slid 18 in (457-mm). The auger is powered in both directions.

The crew encountered some difficulty lifting the heavy 40-in (1-m) auger back into the retainer loop; therefore, they are adding a cable between the auger and the boom. When the auger is put in reverse, the cable will wrap around the auger drawing it up to the boom.

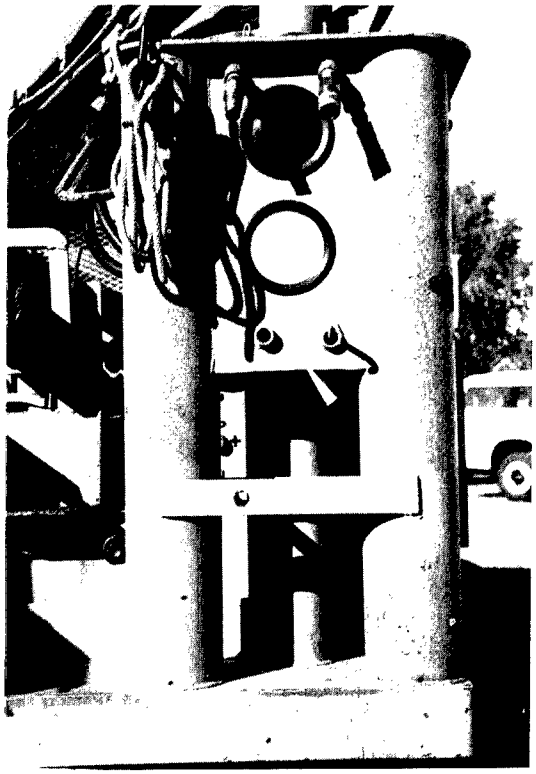

Figure 44. Auger mount with frame of two 5-in (127-mm) steel pipes.

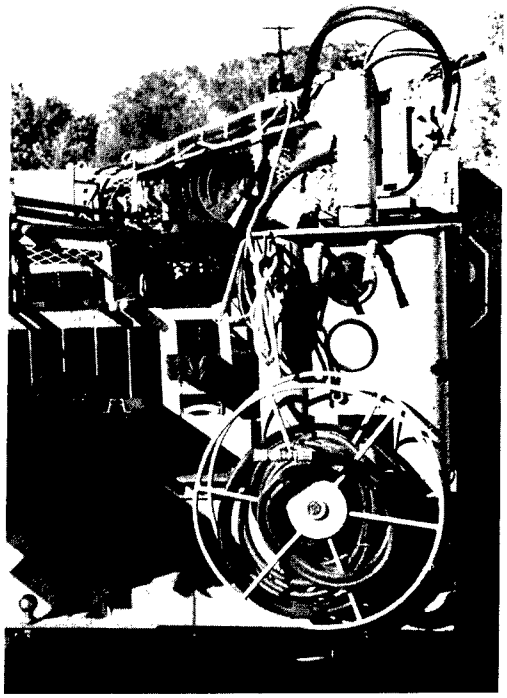

Figure 45. Auger sitting on heavy-duty bumper at the rear of the truck.

Hydraulic feet are being added to the rear bumper to avoid tipping over when the auger is fully extended and filled with dirt. Previously, a handyman jack had to be inserted under the bumper during full extension of the auger.

BENEFITS: The truck expedites the installation and maintenance of signs. By moving the auger from the standard location behind the cab, the auger rotates 270 degrees and extends 11 ft (3.4 m) from the truck. With the auger behind the cab, less than 180 degrees rotation was possible. The additional rotation is especially useful over ditches and near bridges.

The storage box cost $854. Interior racks and partitions, built by the sign shop, brought the cost to approximately $1,000. The storage box and racks carry all signs at once with easy access. The racks prevent signs with encapsulated lens sheeting and posts from being damaged by knocking against each other. A storage compartment is shown in Figure 46. Previously signs with high-intensity sheeting were damaged by snow and ice when transported in the truck bed during the winter.

CONTACT: James A. Hague, Highway Administrator, Dickinson County Court House, Abilene, Kansas 67410. (913)-263-3093. A video demonstrating these and other innovations is available.

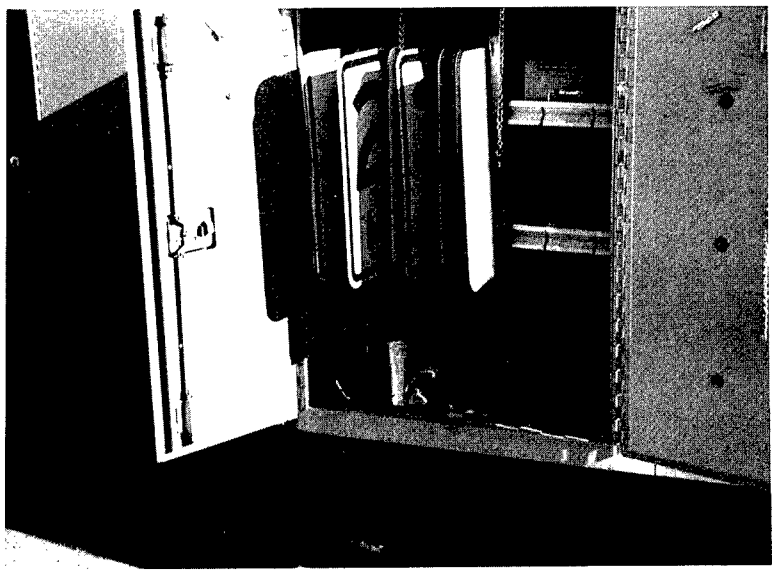

Figure 46. Racks that prevent signs from being damaged.

SWING-OUT WALKWAY

DESCRIPTION: A steel catwalk swings out from the right side of a sign truck on a swivel plate to provide safe, convenient access to signs. The swing-out walkway, which can be operated by one person, was produced by Story County Secondary Road Department, Nevada, Iowa. The idea is based on design suggestions from Linn County, Iowa.

As shown in Figure 47, the dimensions of the walkway are 12.5 ft x 3 ft (3.8 m x 0.9 m) with 3-ft (0.9-m) handrails. The Supports are made from 1-in (25.4-mm) square tubing; the floor is expanded steel grating. Each side consists of three 3-ft (0.9-m) supports at right angles to the catwalk, two crossed supports in the section closest to the truck, and one support running diagonally from the top of the center support to the base at the end of the walkway. The supports are secured with welded steel reinforcing plates.

As seen in Figure 48, the walkway swivels on a 3/4-in (19.1-mm) thick steel 2-ft (0.6-m) diameter plate bolted to the walkway that slides on two 1/2-in (12.7-mm) rollers on a steel square bolted to the front end of the bed of the truck. The latch that holds the walkway in the stored position, shown in Figure 49, is made from a 2 1/2-in (63.5-mm) square tube with a hole drilled through it.

A ladder is stored on the walkway with bungee cords to be used in the rare instance when signs are too far out to reach from the walkway.

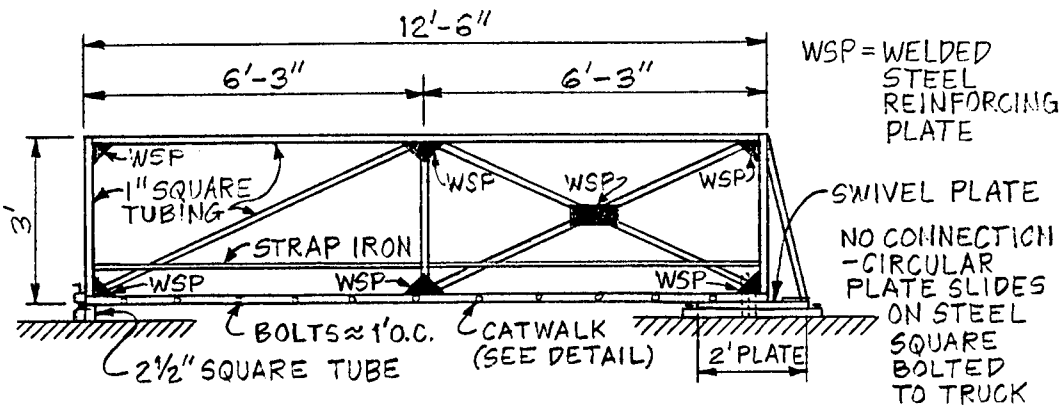

Figure 47. Swing-out walkway with handrails.

PROCEDURE: When traveling, the catwalk is secured along the right side of the truck. At the work site, the walkway is released from the catch and swung out by one person. A drop pin holds it in the open position. When open, the walkway is about 4 ft (1.2 m) off the ground.

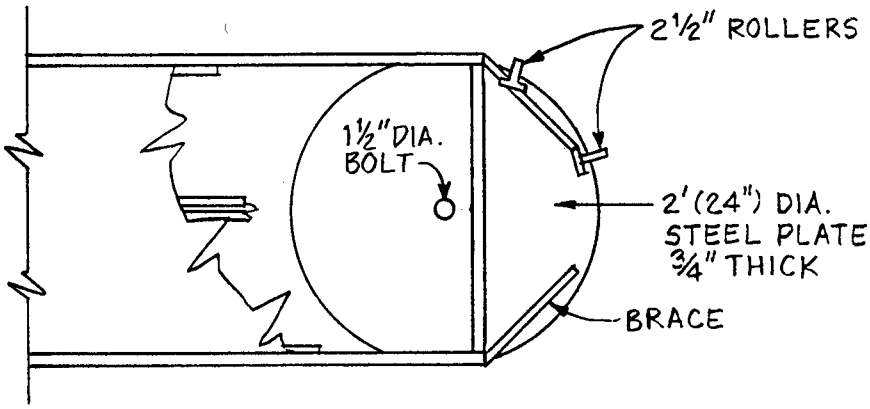

Figure 48. Walkway swivels on a 2-ft (0.6-m) diameter steel circular plate.

Story County suggests that a roller be installed at the catch end opposite the swivel on the 2 1/2-in (63.5-mm) square tube to make it easier to swing the catwalk out. Story County has found that the catwalk sags with use, which creates friction between the truck and walkway and makes it difficult to swing out.

In the uncommon circumstance when the ladder is needed to reach a sign, it is laid against the sign post.

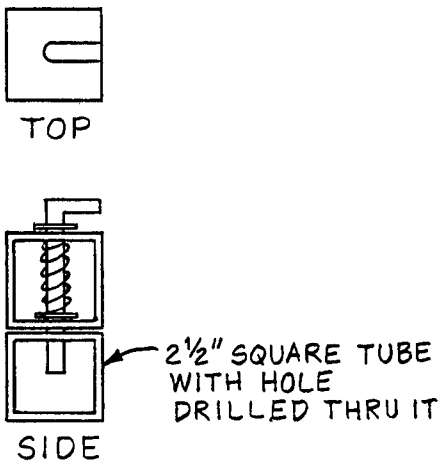

Figure 49. Latch that holds walkway in stored position.

The walkway was produced in the sign shop at a cost of $1,100 for materials and $1,100 for labor.

BENEFITS: The walkway provides safe access to signs and eliminates the need to lean a ladder against a sign post, which may be leaning or rotting. It also allows users to walk over shoulders which may not be traversable due to grade, composition, or inclement weather.

Del S. Jespersen, county engineer, says, "The walkway is cost effective because it is much safer, particularly with sign replacement, and it allows a one-person crew to work more effectively.

CONTACT: Del S. Jespersen, County Engineer, Story County Secondary Road Department, Story County Courthouse, Nevada, Iowa 50201. Phone: (515) 382-6581.

PORTABLE STEP

DESCRIPTION: To give one-man crews access to signs of different heights, the King County Department of Public Works, Seattle, Washington designed a portable step that locks onto wooden posts, as shown in Figure 50. The

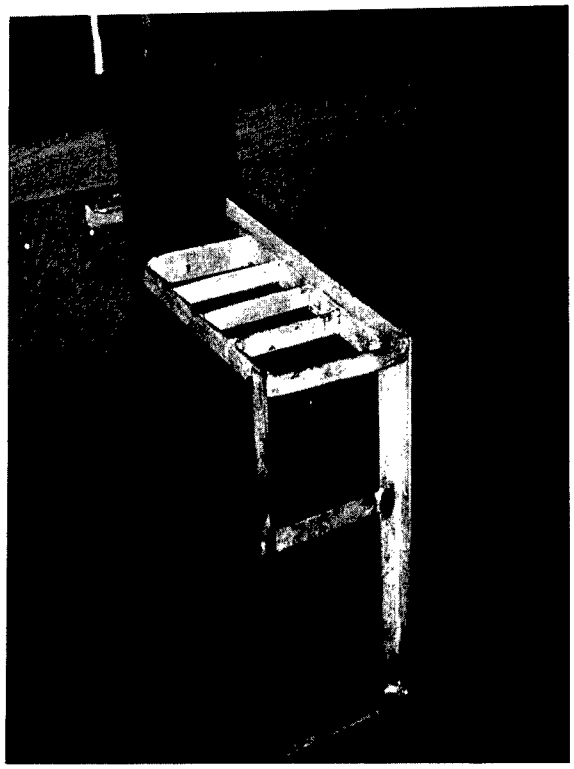

Figure 50. Portable steps that lock onto wooden posts.

folding step is constructed with steel tubing, angle bars and strap irons with dimensions as shown in Figure 51. The edges of the step that come in contact with the post are serrated and offset by approximately 1 1/2 inches (38.1 mm) to insure that the step does not slip.

PROCEDURE: The worker positions the step at a convenient height on the post and steps on it to lock it into place. To remove the step, the worker simply taps the step up and removes it.

BENEFITS: The portable step saves time for one-person crews and aids safety when signs are located on slopes.

CONTACT: John Logan, Traffic and Planning Engineer, King County Department of Public Works, 900 Administration Building, Seattle, Washington 98104. Phone: (206)296-6596.

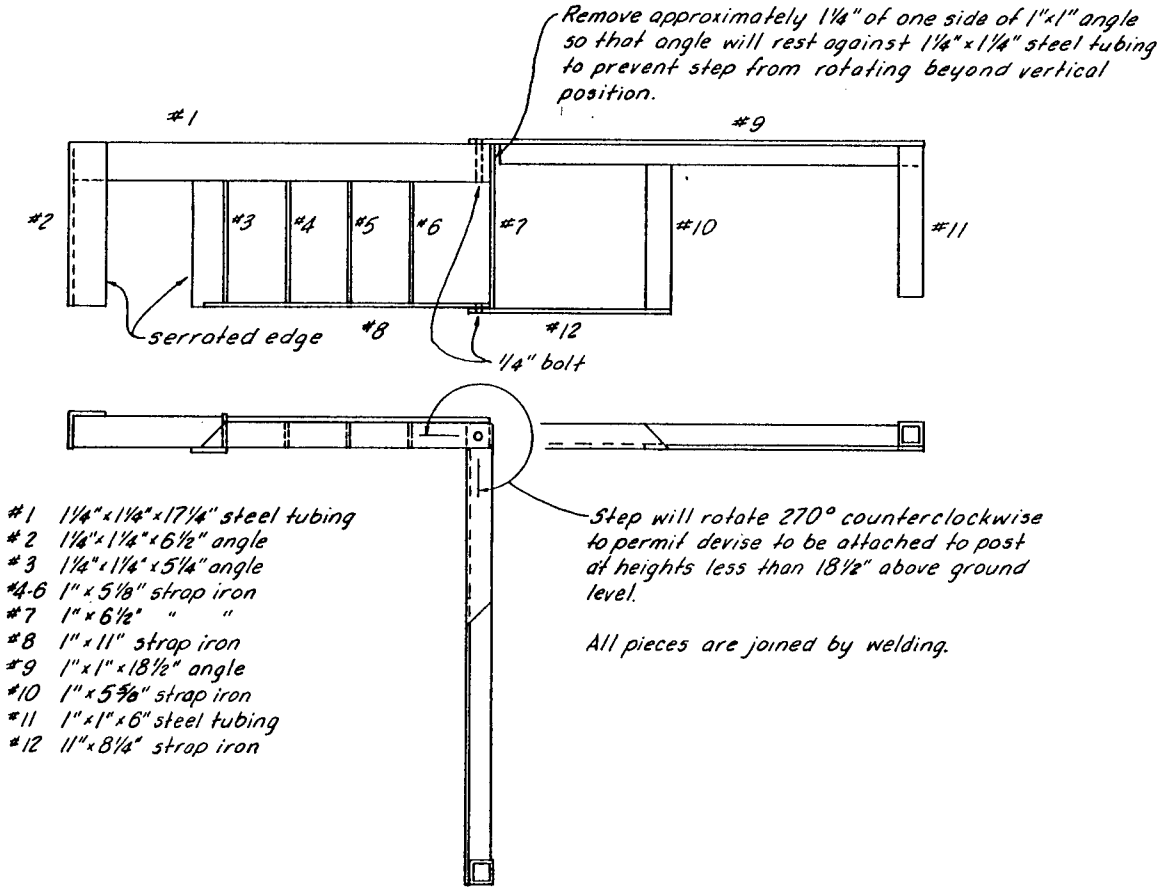

Figure 51. Portable step materials and dimensions.

TOOLS TO PULL POSTS: BEAR CLAW WOODEN POST PULLER, PIPE CLAMP, PRY BAR WITH STAND, AND A-FRAME PULLER

DESCRIPTION: The Texas State Department of Highways and Public Transportation designed four tools for pulling out posts. They include: a bear claw wooden post puller, a pipe clamp, a pry bar with stand, and an A-frame puller.

The bear claw puller, shown in Figure 52, grips a 4-in x 4-in (101.6-mm x 101.6-mm) wooden post so that the 3500-lb (1589.0 kg) winch can pull it out.

Shown in Figure 53 is the pipe clamp, made from a clevis hook and a gear from a "sidewinder" brush shredder. The clamp can grasp anything from a standard galvanized U-channel post up to a 2.5-in (163.5-mm) pipe so that it can be removed with the winch.

Using the pry bar and stand with Y-shaped cap, shown in Figure 54, personnel can manually pry a U-channel post out of the ground. The stand is also

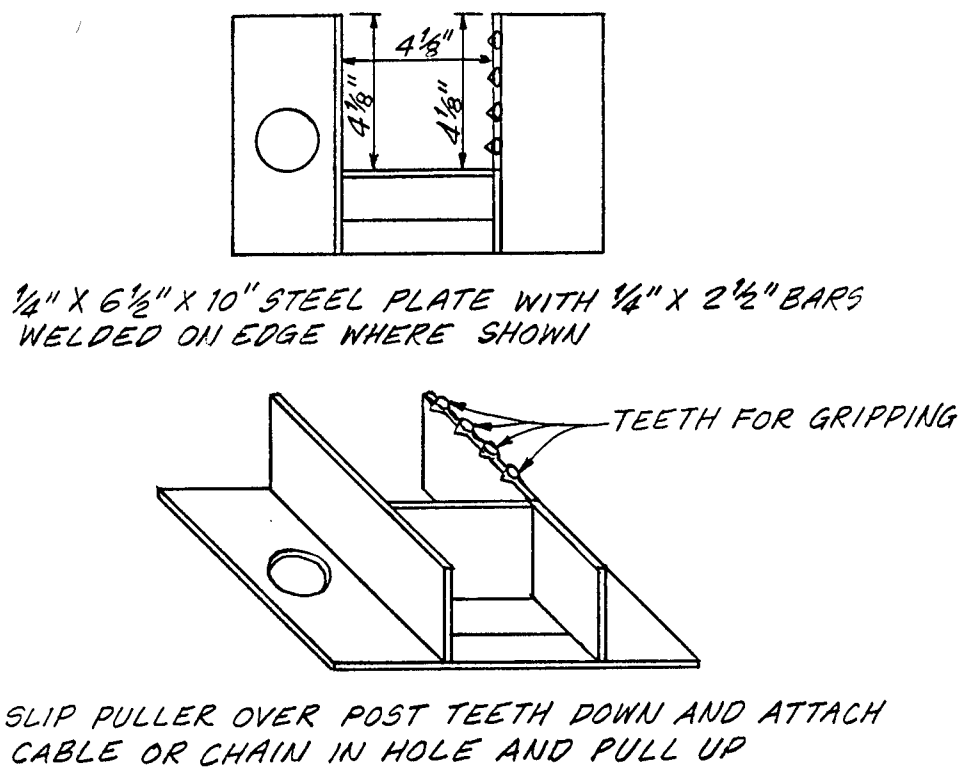

Figure 52. Top and isometric view of bear claw.

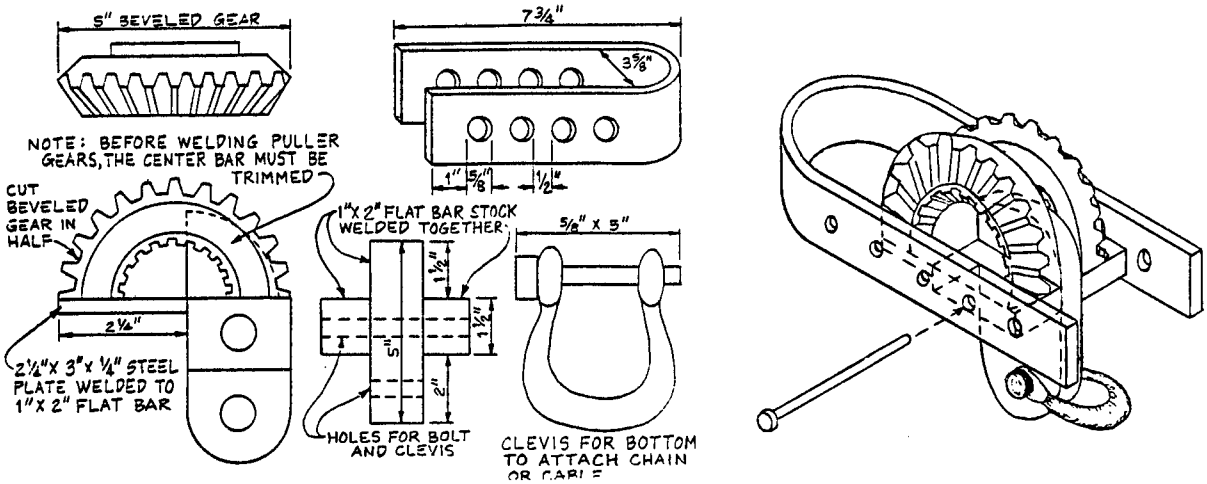

Figure 53. Pipe clamp dimensions (left) and assembled.

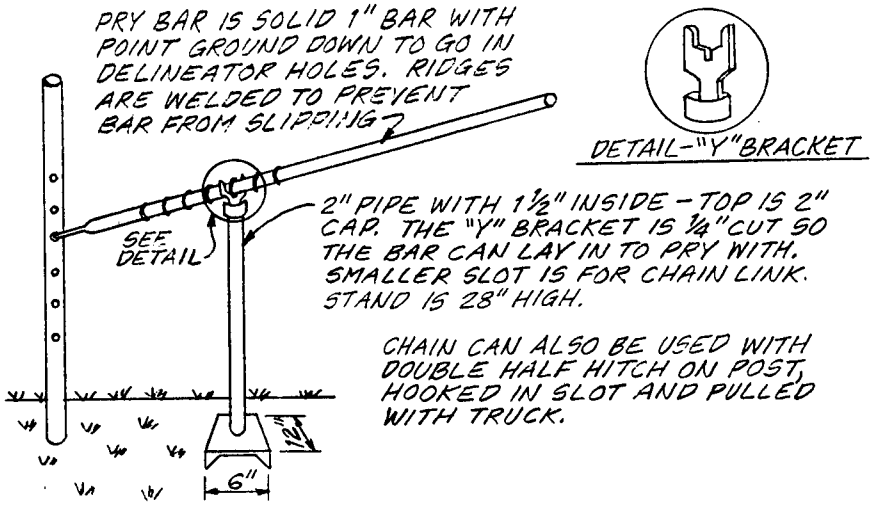

Figure 54. Pry bar and stand with Y-shaped cap.

used to provide leverage when connected to the winch.

Shown in Figure 55, an A-frame post puller, made from delineator post, assists in the removal of posts that are as much as 30 to 40 ft (9.1 to 12.2 m) from the edge of the pavement.

PROCEDURE: The bear claw puller is slipped over a 4-in x 4-in (101.6-mm x 101.6-mm) wooden post with the teeth facing down so that the device does not slip on the post. A cable or chain is attached to the hole opposite the open side of the bear claw puller, and the post

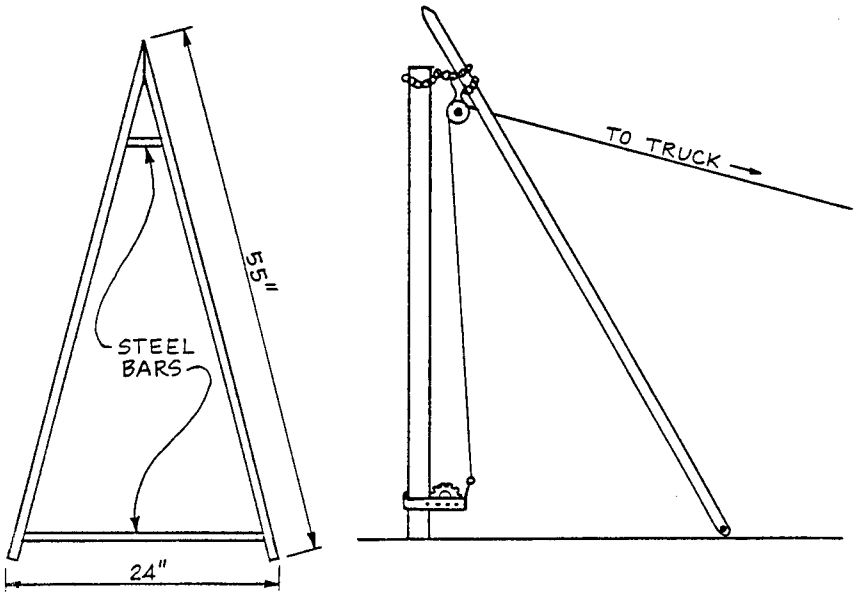

Figure 55. A-frame post puller made from delineator post.

is pulled up. When the post is out of the ground, the device is simply twisted off.

The inclined-toothed jaws of the pipe clamp, made from a gear, have a loop welded to the rear quarter. The gear and loop assembly pivots on an eccentrically placed axle which runs through a 1/4-in x 2-in (6.4-mm x 50.8-mm) U-shaped bracket. As pressure is applied to the loop, the jaws roll forward until the pipe being pulled is clamped between the jaws and the U-shaped bracket. The operator stands safely to the side and operates the electric winch by remote control to straighten or pull a post quickly.

The stand with Y-shaped cap provides leverage so that a worker can manually pry a U-channel post out of the ground, or a chain attached to the truck can pull the sign post out by backing up the truck. The pry bar was made by grinding a point that fits into the post holes on the end of a solid 1-in (25.4-mm) bar. Five rings were welded at the top of the bar to prevent it from slipping when it is placed on a 28-in (711.2-mm) high stand. The stand, made from 2-in (50.8-mm) pipe and a Y-shaped cap, accommodates the pry bar or a chain link, if a post is being pulled by the winch.

When the truck does not have enough power to pull a post out, the stand can be leaned against the post. The chain is attached to the pole in a double-headed hitch and it slides through the Y-shaped cap. As the winch pulls, the stand moves away from the sign. Workers slide the chain through the Y-shaped cap and prop the stand against the post again. The process is repeated until the post is free.

In a similar fashion, the 24-in (609.6-mm) wide A-frame post puller is attached to the top of the post with a chain. The chain to the winch is slipped through a pulley at the top and is attached to the bottom of the post.

BENEFITS: The bear claw wooden post puller, the pipe clamp, the pry bar and stand and the A-frame puller, were invented by Clarence Lee, Maintenance Technician III, and the staff of the Quitman Maintenance Section, to speed operations and help prevent back injuries by reducing the amount of lifting and straining needed to remove signs.

Hubert R. Gore, Road Maintenance Supervisor IV, says, "These tools made the job a whole lot easier and cut way down on back injuries."

CONTACT: Hubert R. Gore, Road Maintenance Supervisor IV, Texas State Department of Highways and Public Transportation, P.O. Box 566, Quitman, Texas 25783. Phone: (903) 763-2244.

TOOLS TO EXTRACT BROKEN POSTS

DESCRIPTION: Tools to extract broken posts from the ground were fabricated from readily available hardware by the Dickinson County Highway Department, Abilene, Kansas. Tool # 1, which removes wood posts, was made from a lag bolt -- a 5/8-in (15.9-mm) light screw with the head cut off -- welded to a piece of re-bar with a T-handle, as shown in Figure 56. Tool # 2, a chain with an adjustable eye attached, is used when the T-handle bolt will not stay in place, shown in Figure 57.

For removing steel posts, Tool # 3, a square clip, shown in Figure 58, was made from a flat bar heated and bent around a vice. The clip slides over the post and a bolt that sticks through the clip is attached to one of the holes on the post.

PROCEDURE: Tool # 1: With a sledge hammer, tap the T-handle tool into the wooden stub that is buried in the ground and screw it into the post. Next, slip the handyman jack under the T-handle and jack the stub out. (See Figure 56.) A nose-head auger can be used instead of the jack. Simply attach Tool #2 between the T-handle and the hooks on the nose-head auger and use the auger to pull the post out.

Tool #2: When the T-handle bolt does not stay in place, wrap the chain around

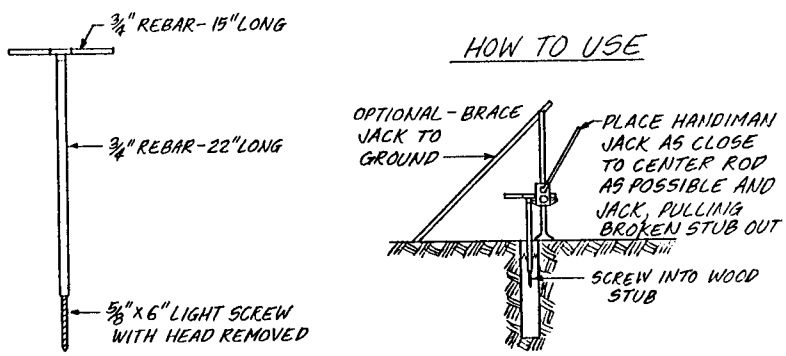

Figure 56. Tool #1 removes wood posts.

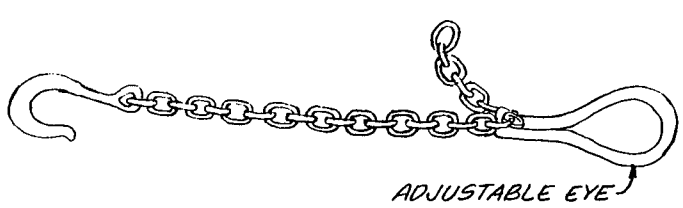

Figure 57. Tool #2 removes wood and steel posts.

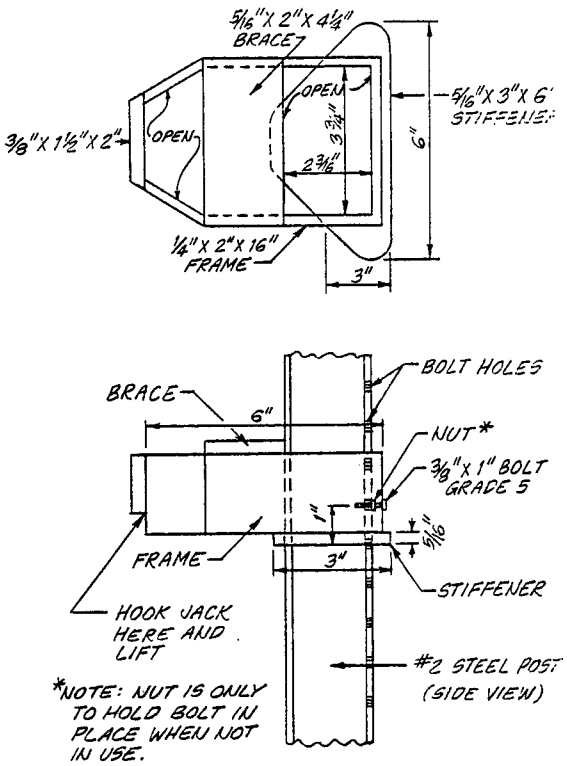

Figure 58. Tool #3 removes steel posts.

the stub. Put the ring in the chain and hook it over the nose of the handyman jack. Brace the top of handyman jack with another steel post at a 45-degree angle and jack the post out.

Tool #3: Slide the square clip and bolt over the top and down the steel post and attach the bolt to one of the holes in the post. Insert the handyman jack braced with a steel post at a 45-degree angle under the clip and jack the post out.

The hydraulic arm on a boom can also be used to lift the post out. Hook a chain between the clip and the boom and hydraulically pull the steel post out.

BENEFITS: Wooden and steel posts are easily extracted.

CONTACT: James A. Hague, Highway Administrator, Dickinson County Court House, Abilene, Kansas, 67410. Phone: (913) 263-3093.

STEEL POST STRAIGHTENER OR "TWISTER HOOK"

DESCRIPTION: A simple tool that is used to straighten bent metal posts in the ground was fabricated by the Dickinson County Highway Department, Abilene, Kansas from a piece of scrap pipe and a $4 hook. As shown in Figure 59, the tool consists of a 50-in (1270-mm) piece of 1.5-in (38.1-mm) pipe with a Clevis slip hook (with eye removed) welded to the end. A piece of steel, 3/8-in x 3/8-in x 3-in (9.5-mm x 9.5-mm x 76.2-mm) is welded to the nose of the tool. Three pieces of metal reinforce the connection.

Last year, the Dickinson County Highway Department used the twister to salvage approximately one third of their 500 damaged steel posts. Even some signs that were hit down and run over and signs facing the wrong direction were straightened up.

PROCEDURE: As shown in Figures 60 and 61, the user hooks the tool onto the front of a bent U-channel metal post and walks around, pulling the sign until it reaches the point where it will stand erect. Dick Houser, Dickinson County Sign Technician, describes how the twister works: "You've got tension on it, and you come on around to where the sign is almost facing the wrong direction, at this point you can feel the tension release. When you let go, the sign stands up where it belongs. It's tremendous because even with a post that's lying down and twisted, you get hold of it, and you can bring it back up. It's amazing how far back you can bend them. You listen to it -- you can feel when it's going to stand up straight. It's a release of tension that you can feel when you are coming around with this tool."

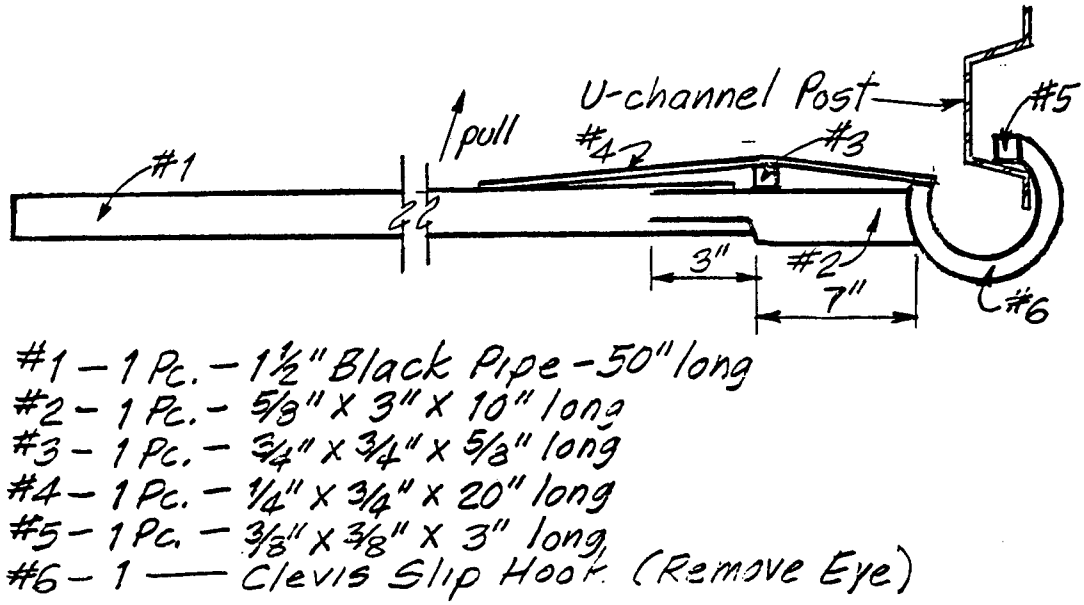

Figure 59. Twister hook straightens bent metal posts.

Figure 60. Tool hooks onto front of bent U-channel post.

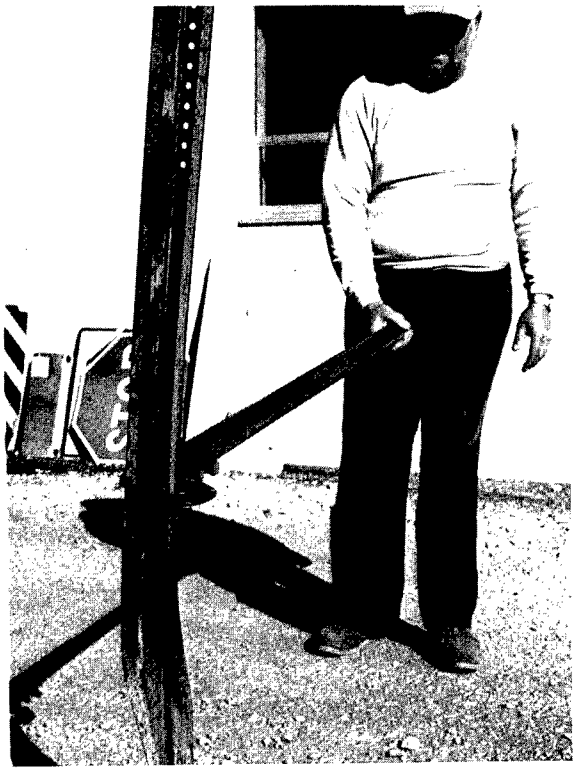

Figure 61. User walks around post until post stands up.

Houser notes that some practice is needed to get the feel of how far to bend the posts. "You can take them too far and they break. It's trial and error. I started using the straightener in 1978. We've used it daily since then."

BENEFITS: The low-cost post straightener salvages bent metal posts that would otherwise have to be extracted and replaced. The Dickinson County Highway Department is able to repair quickly and inexpensively one third of all damaged metal posts in the ground.

CONTACT: James A. Hague, Administrator, Dickinson County Court House, Abilene, Kansas 67410. Phone: (913)263-3093. A video demonstrating this and other innovations is available.

SIGN IDENTIFICATION

DESCRIPTION: Sign identification helps public agencies in two ways. First, it proves legal ownership of stolen signs that have been recovered, making prosecution possible. Second, it provides a means for field crews to determine quickly the age of signs for maintenance purposes. Public agencies are identifying their signs in various ways by affixing or imprinting information on signs about ownership, date of installation, penalties for stealing or vandalizing signs, reporting notice, rewards and vandalism hotlines.

The New York State Department of Transportation attaches a "date of installation" label to each traffic sign. Shown in Figure 62, the label says, "Warning: Signs Save Lives" and also states that removing or tampering with a sign can result in up to $1,000 fine and/or imprisonment.

The Indiana Department of Transportation, Toll Road Division, affixes on the back of signs 2-in x 2-in (50.8-mm x 50.8-mm) pieces of high-intensity sheeting, with the date of installation for maintenance purposes.

After a rash of sign thefts several years ago, Village of Lexington, Ohio sign maintenance personnel began punching "Lexington" on the back of their signs.

PROCEDURES: In Indiana, 2-in x 2-in (50.8-mm x 50.8-mm) pieces of high-intensity sheeting are cut from scraps by sign personnel during down times. With

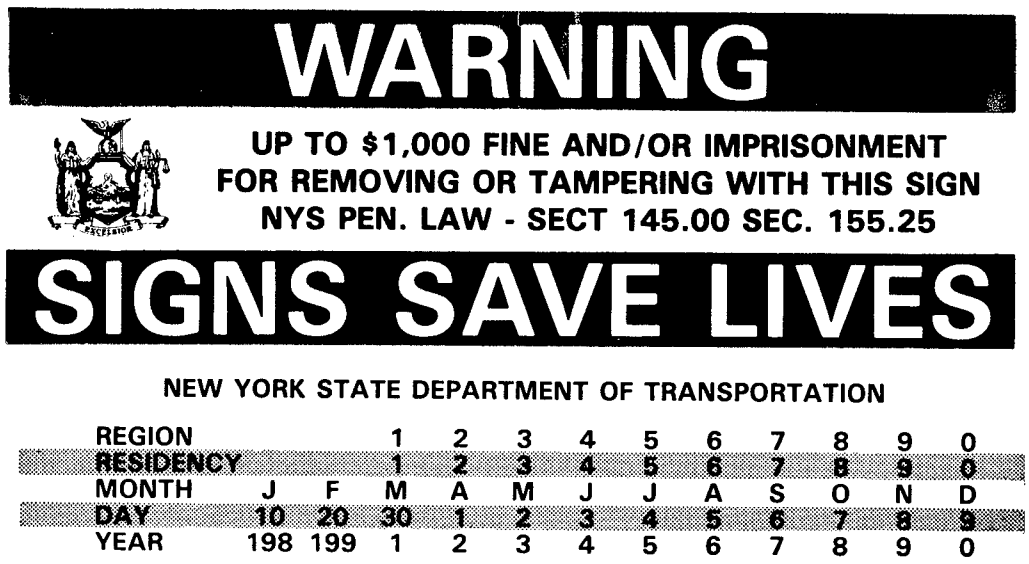

Figure 62. New York State Department of Transportation sign label.

a rubber stamp and sign ink, these pieces are stamped with the month and year of installation. The pieces, which have pressure sensitive adhesive on the back, are easily fastened to the back of the sign prior to installation.

In New York, the 5.5-in x 3-in (139.7-mm x 76.2-mm) warning labels are made from 3-mil white vinyl with pressure-sensitive adhesive, which adheres to metal signs. The black ink is sunfast and ultraviolet and weather resistent, and resists fading for no less than one year. The label also warns against vandalizing the sign, lists penalties, and identifies the region, residency, month, day, and year of installation.

Village of Lexington hand-punches "Lexington" on their signs so that they can identify them when they are stolen and recovered. Each letter is individually stamped permanently on the back of the sign.

BENEFITS: Sign identification has been found to be one of the most cost-effective countermeasures to sign vandalism. Costs of sign identification are low. New York State Department of Transportation "date of installation" labels cost approximately 4 cents each and help prevent vandalism. Because stamps are made and installed during fill-in time in Indiana, the only direct cost is the rubber stamp. The Village of Lexington, Ohio spent $20 for a set of metal punches. The only additional cost is the manpower to punch each sign.

Lonnie McGhee, Village of Lexington says, "Kids are less apt to keep a sign if an identification mark is on it."

Gene Hershner, former street superintendent, Village of Lexington, says: "We found that if you can't prove it is your sign, you can't prove it was stolen. We now stamp our signs with our name. When this got out to the public, our sign stealing was cut approximately 90 percent."

In Indiana, field crews can look at the stamps on the back of signs and quickly determine sign age for maintenance or replacement. When a sign is damaged or knocked down, the crews can quickly determine whether to repair or replace the sign. The sign identifications are also helping Indiana put its sign inventory on a computer data base that will allow identification of signs by type and location. Field crews are currently checking signs in the field to update the ID sheet for entry into the data base.

CONTACTS: Samuel E. Wolfe, Highway Engineer, Indiana Department of Transportation, Toll Road Division, 52551 Ash Road, P.O. Box 1, Granger, IN 46530-0001 Phone: (219)674-8836.

Mike Clark, New York State Department of Transportation, 1220 Washington Ave., State Campus, Room 217, Building 5, Albany, NY 12232. Phone: (518) 457-9503.

Lonnie McGhee, Village of Lexington, 44 West Main Street, Lexington, OH 44904. Phone: (419)884-2620.

WOOD POST ANTI-THEFT CLEAT

DESCRIPTION: The Department of Public Works, King County, Washington, designed a cleat to prevent theft of signs by persons who push wooden sign posts over with car bumpers so that they can remove the signs and posts. A 1/2-in (38.1- mm) cleat foot, at a 90-degree angle, at the bottom of the cleat prevents the post from being pushed over from the front.

The anti-theft cleat does not interfere with the breakaway characteristics of the wood sign post. The top of the cleat is at ground level, below the breakaway feature of the post.

PROCEDURE: The cleat, shown in Figure 63, is made from 2 1/2-in (63.5-mm) x 30-in (762-mm) strips cut from 30-in (762-mm) sign blanks. The cleat is attached with two double-headed nails to the backside of the bottom of the post. The double headed nails allow maintenance workers to remove the cleat if the sign needs to be replaced. Gravel is tamped over the 1 1/2-in cleat foot, which anchors the post in the ground.

Initially, King County fabricated the cleats from old sign blanks and later put the project out for bid. The cleats are now produced by the United Cerebral Palsy Association for 30 cents each. King County provides the old sign blanks, and the group keeps the scrap metal that is left over.

Figure 63. Cleat is attached to the backside at the bottom to the post.

To detach the cleat from the post so that the post can be removed from the ground, maintenance personnel pry off the nails with a pry bar. Sometimes after the post has been removed, the cleats can be pulled out by hand. Sometimes they are left in the ground. In other cases, King County uses a spring-loaded friction device, which they fabricated for less than $25, to pull a cleat. The extraction device, shown in Figure 64, consists of a spring-loaded clamp that snaps over the cleat with a loop welded to the end.

When the clamp is attached to the cleat, a pry bar is inserted into the loop and the cleat is pried out of the ground.

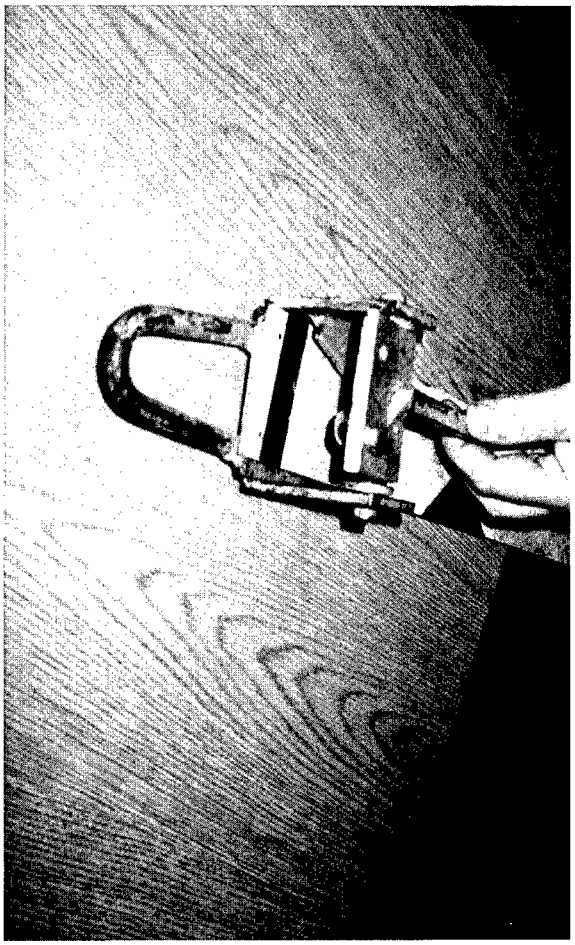

Figure 64. Extraction device to pull cleat from the post.

BENEFITS: John Logan, Traffic and Planning Engineer, King County Department of Public Works, says, "The cleats have reduced theft. Not one sign with a cleat attached has been pulled out. The cleats do a marvelous job of preventing sign theft from pull-out."

Logan points out that before using the cleat, King County suffered two fatal accidents resulting from stop signs that had been pulled out. The cleat not only saves money by preventing sign theft, but also contributes substantially to safety.

CONTACT: John Logan, Traffic and Planning Engineer, King County Department of Public Works, 900 Administration Building, Seattle, Washington, 98104. Phone: (206)296-6596.

SIGN VANDALISM: PUBLIC INFORMATION CAMPAIGN
MINIATURE SIGN REPLICAS & PUBLIC PRESENTATIONS

DESCRIPTION: For six years, Franklin County, Ohio, has distributed miniature replicas of signs as part of a public information campaign designed to reduce the $60,000-a-year that was being spent on sign repair and replacement due to vandalism. The information program publicized an Ohio law, which went into effect in June 1990, that increased penalties for tampering with or taking road signs. The sign replicas, news releases, displays, and talks to schools and community groups drew attention to the new law.

The replicas, which cost 2 cents each, are printed on heavy colored paper with an actual road sign pictured on one side and information on the sign's importance to safety on the other side. For example, the back of the STOP sign asks: "Would you want to drive your family home at night with this sign missing from your street?" The replica also states the costs and legal penalties for sign vandalism.

PROCEDURE: Around 55,000 of the miniature sign replicas, shown in Figures 65, 66, 67 and 68, have been handed out at schools, through civic groups, on information racks, and at the county fair. Each year traffic personnel have presented talks at ten schools, where they gave each student a set of eight facsimile signs.

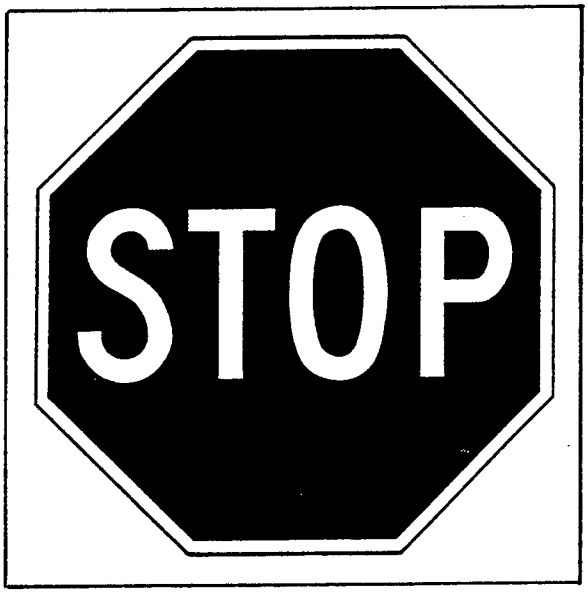

Figure 65. Front of STOP sign replica.

We need your help!

Would you want to drive your family home at night with this sign missing from your street?

Senseless sign vandalism is expensive and dangerous. We know the money used to replace signs could be better spent on making your roads safer. We hope vandalized signs do not cause you to be involved in an accident.

We can list many examples of injury and property damage caused by missing and vandalized signs. As you travel, think how much your safety depends on traffic signs. Consider the suffering that could result if a missing stop sign caused an accident involving a school bus.

Both removing and vandalizing signs are violations of Ohio Law, (O.R.C. 4511.17, 4511.99d) punishable with a jail term and/or a fine up to $1000. Individual signs are now identified with a serial number to prove the time and location of placement. This makes specific identification possible. Vandals can now be held liable in court for damage caused by the missing sign they removed.

I estimate that within Franklin County, alone, the cost of sign vandalism and sign theft is equal to the cost of paving ten miles of road. Please don't add this needless tax burden to our country.

If there are any traffic signs in your possession, bring them in to any of the six County Engineer's facilities. Your identity will not be recorded nor will you be prosecuted. Help us save your tax dollars.

If you know of a missing or damaged sign please report it to your Franklin County Engineer at 462-3072, 24 hours a day.

Thank you,

John Circle, P.E., P.S.
Franklin County Engineer

"SAVE YOUR SIGNS FOR SAFETY"

Figure 66. Back of STOP sign replica.

Children and teenagers use the replicas to decorate their rooms. John Circle, Franklin County Engineer, says, "We get the sign replicas in their hands, and then they read the message. Safety is the most important aspect for kids. It's the message that stays with them."

Figure 67. Front of NO PASSING ZONE sign replica.

Safe Speeds

We are used to driving 55 mph on the interstate routes. When we drive the county and township roads the unposted speed limit is the same. 55 mph. Are we safe at that speed? Records show that there is a 10 times greater chance of losing your life on county roads than on interstate routes. This is not surprising. Interstates cost about 10 times more to build — money spent for safety.

Why doesn't the government do something about this?

Well, they have — They made you responsible.

The Ohio Revised Code states, "No person shall operate a motor vehicle ... at a speed greater or less than is reasonable and proper ... and at a greater speed than will permit him to bring the vehicle to a stop within the assured clear distance.

This means motorists are to drive according to existing conditions. The physical characteristics of the road, the weather conditions, darkness and even our mental attitudes and or physical conditions must govern our driving habits.

Obviously, during wet conditions it takes us longer to stop, resulting in increased stopping distances. And likewise, snow, fog, rain, etc. ... reduce our visibility and therefore, decrease our sight distance.

Also, our mental attitudes and physical conditions reduce our ability to think and act behind the wheel of a vehicle.

How often do one or more of these factors apply to you?

Anger	Drugs	Sickness
Alcohol	Drowsiness	Distractions — Children fighting, . .

As operators of motor vehicles, we must, at all times, drive at a reasonable and proper speed.

We must free ourselves from outside mental and physical conditions that could impair good judgement. Continually we should be on guard for changes in road conditions, other motorists and pedestrians, and changes in our abilities as drivers. Only then can Franklin County roads be a safe mode of travel.

Questions pertaining to speeds on Franklin County jurisdiction highways can be directed to the Franklin County Engineer's Office, 462-3043.

DON'T BE 10 TIMES AS SORRY
BE 20 TIMES AS SAFE
FASTEN YOUR SEAT BELT

Thank you,

John Circle, P.E., P.S.
Franklin County Engineer

Franklin County Engineer John Circle

"SAVE YOUR SIGNS FOR SAFETY"

Figure 68. Back of NO PASSING ZONE sign replica.

BENEFITS: In the first three years, the public information campaign, which included the sign replicas, reduced vandalism and costs by 40 percent, according to Circle. He says, "One of the most effective ways to get the anti-vandalism point across has been through talks to schools. The students are impressed with the seriousness and costs involved with sign vandalism."

The signs, which cost 2 cents each, also helped publicize the new law that went into effect in June 1990. Franklin County estimates that since the law went into effect, sign vandalism and theft has been reduced by 30 percent.

Circle says, "The law change and the sign replicas go together. The signs make the increased penalties more effective."

CONTACT: John Circle, County Engineer, Franklin County, 970 Dublin Road, Columbus, Ohio 43215. Phone: (614)462-3043.

☆U.S. GOVERNMENT PRINTING OFFICE: 1992-617-000/66035

HTA-31/6-92(100