U.S. Department
of Transportation
**Federal Highway
Administration**

Guardrail Testing Program

Final Report

Publication No. FHWA-RD/FLP-90-087
May 1990

NOTICE

This document is disseminated under the sponsorship of the Department of Transportation in the interest of information exchange. The United States Government assumes no liability for its contents or use thereof.

The United States Government does not endorse products or manufacturers. Trademarks or manufacturer's names appear herein only because they are essential to the object of this document.

Technical Report Documentation Page

1. Report No.	2. Government Accession No.	3. Recipient's Catalog No.
FHWA-RD-90-087		

4. Title and Subtitle	5. Report Date
GUARDRAIL TESTING PROGRAM: FINAL REPORT	June 1990
	6. Performing Organization Code: 1818
7. Author(s): D. Stout, J. Hinch and D. Sawyer	8. Performing Organization Report No.: FHWA-89-07
9. Performing Organization Name and Address: ENSCO, Inc. 5400 Port Royal Road Springfield, VA 22151	10. Work Unit No. (TRAIS): 3A5b3032
	11. Contract or Grant No.: DTFH71-87-C-00002
12. Sponsoring Agency Name and Address: Eastern Federal Lands Highway Division Federal Highway Administration 21400 Ridgetop Circle Sterling, VA 22170	13. Type of Report and Period Covered: Final Report January 1987 through May 1990
	14. Sponsoring Agency Code

15. Supplementary Notes

FHWA Contract Manager: C. McDevitt (HSR-20)

16. Abstract

A series of crash tests were conducted to evaluate aesthetic guardrails, guardwalls, median barriers and bridge rails that have been designed for use on park roads, parkways and other Federal Lands roads.

Following two iterations of redesign, a steel-backed wooden guardrail showed acceptable performance when tested and evaluated in accordance with NCHRP Report 230. The successful system feature 10-in by 12-in by 7-ft (0.25-m by 0.30-m by 2.1-m) posts.

A rough stone masonry guardwall showed acceptable performance when tested and evaluated in accordance with NCHRP Report 230, following a modification consisting of raising the concrete core.

An artificial stone median barrier made of precast concrete showed acceptable performance when tested and evaluated in accordance with NCHRP Report 230. The excellent appearance of this artificial stone barrier makes it a very acceptable replacement for natural stone barriers. The use of this barrier could result in a great saving of time, labor and money.

A smooth-stone masonry bridge rail showed acceptable performance when tested and evaluated in accordance with NCHRP Report 230.

Designs were developed for a removeable guardrail system planned to be used in Glacier National Park.

17. Key Words		18. Distribution Statement
Parkway Park Road Guardrail Guardwall	Bridge Rail Median Barrier Full-scale Testing	No restrictions. This document is available to the public through the National Technical Information Service, Springfield, VA 22161.

19. Security Classif. (of this report)	20. Security Classif. (of this page)	21. No. of Pages	22. Price
Unclassified	Unclassified	196	

Form DOT F 1700.7 (8-72) Reproduction of completed page authorized

SI* (MODERN METRIC) CONVERSION FACTORS

APPROXIMATE CONVERSIONS TO SI UNITS

Symbol	When You Know	Multiply By	To Find	Symbol
	LENGTH			
in	inches	25.4	millimetres	mm
ft	feet	0.305	metres	m
yd	yards	0.914	metres	m
mi	miles	1.61	kilometres	km
	AREA			
in^2	square inches	645.2	millimetres squared	mm^2
ft^2	square feet	0.093	metres squared	m^2
yd^2	square yards	0.836	metres squared	m^2
ac	acres	0.405	hectares	ha
mi^2	square miles	2.59	kilometres squared	km^2
	VOLUME			
fl oz	fluid ounces	29.57	millilitres	mL
gal	gallons	3.785	litres	L
ft^3	cubic feet	0.028	metres cubed	m^3
yd^3	cubic yards	0.765	metres cubed	m^3
	MASS			
oz	ounces	28.35	grams	g
lb	pounds	0.454	kilograms	kg
T	short tons (2000 lb)	0.907	megagrams	Mg
	TEMPERATURE (exact)			
°F	Fahrenheit temperature	5(F-32)/9	Celcius temperature	°C

NOTE: Volumes greater than 1000 L shall be shown in m^3.

APPROXIMATE CONVERSIONS FROM SI UNITS

Symbol	When You Know	Multiply By	To Find	Symbol
	LENGTH			
mm	millimetres	0.039	inches	in
m	metres	3.28	feet	ft
m	metres	1.09	yards	yd
km	kilometres	0.621	miles	mi
	AREA			
mm^2	millimetres squared	0.0016	square inches	in^2
m^2	metres squared	10.764	square feet	ft^2
ha	hectares	2.47	acres	ac
km^2	kilometres squared	0.386	square miles	mi^2
	VOLUME			
mL	millilitres	0.034	fluid ounces	fl oz
L	litres	0.264	gallons	gal
m^3	metres cubed	35.315	cubic feet	ft^3
m^3	metres cubed	1.308	cubic yards	yd^3
	MASS			
g	grams	0.035	ounces	oz
kg	kilograms	2.205	pounds	lb
Mg	megagrams	1.102	short tons (2000 lb)	T
	TEMPERATURE (exact)			
°C	Celcius temperature	1.8C + 32	Fahrenheit temperature	°F

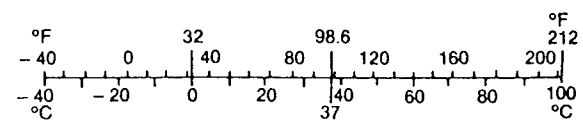

* SI is the symbol for the International System of Measurement

(Revised April 1989)

TABLE OF CONTENTS

Section	Page
INTRODUCTION	1
1. INTRODUCTION	1
2. BACKGROUND	1
3. TEST CRITERIA FOR PARK ROADS AND PARKWAYS	2
a. General Description	2
b. Test Criteria	3
TASK A - SURVEY	7
1. LONGITUDINAL BARRIERS/BARRIER DESIGNS	7
a. Eastern Federal Lands Highway Division	9
b. Central Federal Lands Highway Division	9
c. Western Federal Lands Highway Division	9
2. VEHICLE MIX	9
3. SPEED/ACCIDENT RESULTS	10
TASK B - ANALYSIS	12
1. VEHICLE ROLLOVER ANALYSIS	12
2. LONGITUDINAL STRENGTH OF GUARDRAIL SYSTEMS	13
3. PENDULUM TESTS	14
TASK C - BARRIER DESIGN	17
1. TIMBER GUARDRAIL SYSTEM	17
a. Effects of Post Cross Section Reduction	17
b. Effects of Soil Plates on Post Deflection	19
2. NEW DESIGN OF NPS TIMBER GUARDRAIL SYSTEM	22
a. Improvements to Present System	23
b. Comparison to W-beam Steel System	25
c. Improved Designs	25
3. HIGH-SPEED WOODEN GUARDRAIL SYSTEM	26
4. STONE MASONRY GUARDWALL SYSTEM	30
a. New Design of Stone Masonry Guardwall	30
b. Mountable Curb	32
5. ARTIFICIAL STONE, PRECAST CONCRETE MEDIAN BARRIER	32

TABLE OF CONTENTS (continued)

Section	Page
6. LOG GUARDRAIL SYSTEM	34
7. REMOVEABLE GUARDRAIL SYSTEM DESIGNS	34
a. Introduction	34
b. Description of Various Concepts	38
TASK D - TEST PROGRAM DEVELOPMENT	42
TASK E - FULL-SCALE TESTS	44
1. TEST 1818-5-1-87	44
2. TEST 1818-5-2-87	54
3. TEST 1818-5-3-87	63
4. TEST 1818-5-4-87	73
5. TEST 1818-5-88	83
6. TEST 1818-5-6-87	89
7. TEST 1818-7-88	100
8. TEST 1818-8-88	108
9. TEST 1818-9-90	122
10. TEST 1818-12-88	127
11. TEST 1818-14-88	140
CONCLUSIONS	151
RECOMMENDATIONS	153
REFERENCES	154
APPENDIX A - ANALYSIS OF VEHICLE OVERTURN DUE TO LATERAL LOADS	155
APPENDIX B - LONGITUDINAL STRENGTH OF THREE CURRENT NPS GUARDRAIL SYSTEMS	159
1. STEEL-BACKED TIMBER GUARDRAIL	159
2. BLOCKED-OUT, STEEL-BACKED TIMBER GUARDRAIL	162
3. STEEL-BACKED LOG GUARDRAIL	164
APPENDIX C - REMOVEABLE GUARDRAIL SYSTEM DESIGN DRAWINGS	168

LIST OF FIGURES

Figure		Page
1.	Force-displacement plot for pendulum tests.....	16
2.	Standard post installation.....	17
3.	Standard wooden guardrail system design.....	24
4.	Improved wooden guardrail designs.....	27
5.	High-speed wooden guardrail design.....	29
6.	Stone masonry guardwall system.....	31
7.	Artificial stone, precast concrete median barrier design.....	33
8.	Curved edge blockout design.....	35
9.	Removeable guardrail system design, concept 1.....	36
10.	Removeable guardrail system design, concept 2.....	37
11.	Test site layout, test 1818-5-1-87.....	45
12.	Test device, test 1818-5-1-87.....	46
13.	Pretest photographs of guardrail system, test 1818-5-1-87.....	47
14.	Pretest photographs of test vehicle, test 1818-5-1-87.....	48
15.	Test summary, test 1818-5-1-87.....	50
16.	Vehicle acceleration, test 1818-5-1-87.....	51
17.	Posttest photographs of test vehicle, test 1818-5-1-87.....	52
18.	Posttest photographs of guardrail system, test 1818-5-1-87.....	53
19.	Test site layout, test 1818-5-2-87.....	55
20.	Test device, test 1818-5-2-87.....	56
21.	Pretest photographs of guardrail system, test 1818-5-2-87.....	57

LIST OF FIGURES (continued)

Figure		Page
22.	Pretest photographs of test vehicle, test 1818-5-2-87	58
23.	Test summary, test 1818-5-2-87	60
24.	Vehicle acceleration, test 1818-5-2-87	61
25.	Posttest photographs of test vehicle, test 1818-5-2-87	62
26.	Posttest photographs of guardrail system, test 1818-5-2-87	64
27.	Test site layout, test 1818-5-3-87	65
28.	Test device, test 1818-5-3-87	66
29.	Pretest photographs of guardwall system, test 1818-5-3-87	67
30.	Pretest photographs of test vehicle, test 1818-5-3-87	68
31.	Test summary, test 1818-5-3-87	70
32.	Vehicle acceleration, test 1818-5-3-87	71
33.	Posttest photographs of test vehicle, test 1818-5-3-87	72
34.	Posttest photographs of guardwall system, test 1818-5-3-87	74
35.	Test site layout, test 1818-5-4-87	75
36.	Test device, test 1818-5-4-87	76
37.	Pretest photographs of guardwall system, test 1818-5-4-87	77
38.	Pretest photographs of test vehicle, test 1818-5-4-87	78
39.	Test summary, test 1818-5-4-87	80
40.	Vehicle acceleration, test 1818-5-4-87	81
41.	Posttest photographs of test vehicle, test 1818-5-4-87	82

LIST OF FIGURES (continued)

Figure		Page
42.	Posttest photographs of guardwall system, test 1818-5-4-87	84
43.	Test site layout, test 1818-5-88	85
44.	Test device, test 1818-5-88	86
45.	Pretest photographs of guardwall system, test 1818-5-88	87
46.	Pretest photographs of test vehicle	88
	test 1818-5-88	88
47.	Test summary, test 1818-5-88	90
48.	Posttest photographs of test vehicle, test 1818-5-88	91
49.	Posttest photographs of guardwall system, test 1818-5-88	92
50.	Test site layout, test 1818-5-6-87	93
51.	Test device, test 1818-5-6-87	94
52.	Pretest photographs of guardrail system, test 1818-5-6-87	95
53.	Pretest photographs of test vehicle, test 1818-5-6-87	97
54.	Test summary, test 1818-5-6-87	98
55.	Vehicle acceleration, test 1818-5-6-87	99
56.	Posttest photographs of test vehicle, test 1818-5-6-87	101
57.	Posttest photographs of guardrail system, test 1818-5-6-87	102
58.	Test site layout, test 1818-7-88	104
59.	Test device, test 1818-7-88	105
60.	Pretest photographs of median barrier system, test 1818-7-88	106

LIST OF FIGURES (continued)

Figure		Page
61.	Pretest photographs of test vehicle, test 1818-7-88	107
62.	Test summary, test 1818-7-88	109
63.	Vehicle acceleration, test 1818-7-88	110
64.	Posttest photographs of test vehicle, test 1818-7-88	111
65.	Posttest photographs of median barrier system, test 1818-7-88	112
66.	Test site layout, test 1818-8-88	113
67.	Test device, test 1818-8-88	114
68.	Pretest photographs of guardrail system, test 1818-8-88	115
69.	Pretest photographs of test vehicle, test 1818-8-88	117
70.	Test summary, test 1818-8-88	118
71.	Vehicle acceleration, test 1818-8-88	119
72.	Posttest photographs of test vehicle, test 1818-8-88	120
73.	Posttest photographs of guardrail system, test 1818-8-88	121
74.	Test site layout, test 1818-9-90	123
75.	Test device, test 1818-9-90	124
76.	Pretest photographs of bridge rail system, test 1818-9-90	125
77.	Pretest photographs of test vehicle, test 1818-9-90	126
78.	Test summary, test 1818-9-90	128
79.	Vehicle acceleration, test 1818-9-90	129
80.	Posttest photographs of test vehicle, test 1818-9-90	130

LIST OF FIGURES (continued)

Figure		Page
81.	Posttest photographs of bridge rail system, test 1818-9-90	131
82.	Test site layout, test 1818-12-88	132
83.	Test device, test 1818-12-88	133
84.	Pretest photographs of median barrier system, test 1818-12-88	134
85.	Pretest photographs of test vehicle, test 1818-12-88	136
86.	Test summary, test 1818-12-88	137
87.	Vehicle acceleration, test 1818-12-88	138
88.	Posttest photographs of test vehicle, test 1818-12-88	139
89.	Posttest photographs of median barrier system, test 1818-12-88	141
90.	Test site layout, test 1818-14-88	142
91.	Test device, test 1818-14-88	143
92.	Pretest photographs of guardrail system, test 1818-14-88	144
93.	Pretest photographs of test vehicle, test 1818-14-88	145
94.	Test summary, test 1818-14-88	147
95.	Vehicle acceleration, test 1818-14-88	148
96.	Posttest photographs of test vehicle, test 1818-14-88	149
97.	Posttest photographs of guardrail system, test 1818-14-88	150
98.	Overturn impulse model	156

LIST OF TABLES

Table		Page
1.	Parkway supplemental test matrix.....	5
2.	FHWA and NPS contact personnel by division.....	7
3.	National Park Service guardrail/guardwall summary.	8
4.	Traffic engineering safety study summary.....	10
5.	Traffic engineering speed study summary.....	10
6.	Rollover analysis results.....	14
7.	Barrier system analysis results.....	14
8.	15 mi/h, soil plate pendulum tests.....	20
9.	20 mi/h, soil plate pendulum tests.....	21
10.	Post to ground attachment concept drawing numbers.	39
11.	Rail to post connection concept drawing numbers...	40
12.	Test matrix.....	43
13.	Dummy parameters, test 1818-5-2-87.....	59
14.	Dummy parameters, test 1818-5-3-87.....	69
15.	Dummy parameters, test 1818-5-4-87.....	79
16.	Dummy parameters, test 1818-5-6-87.....	100

INTRODUCTION

1. INTRODUCTION

The purpose of this study, entitled *Guardrail Testing Program*, was to survey, analyze, design, and test the common longitudinal barrier systems deployed by the National Park Service (NPS) throughout the United States. The following is a breakdown of the contract objectives.

- Survey (Task A) - Conduct a survey of the prevalent NPS longitudinal barrier systems within the Eastern, Central, and Western Federal Lands Highway Divisions (EFLHD, CFLHD, and WFLHD) of the Federal Highway Administration (FHWA).
- Analysis (Task B) - Perform analysis of vehicle/barrier interaction including computer analysis and pendulum tests.
- Barrier Design (Task C) - Design longitudinal barrier hardware, components, and layout, as required.
- Test Program Development (Task D) - Prepare and submit a test plan for the contract.
- Full-Scale Tests (Task E) - Conduct the full-scale crash tests into the selected barriers of interest.

Five sections describe tasks A through E. The task E section discusses each test in detail. The last two sections of the report contain conclusions and recommendations, which summarize the results of this research project. This report follows the task outline of the project. The remainder of the introduction discusses the background and possible test criteria for the evaluation of park barrier systems.

2. BACKGROUND

Most park roads and parkways were not intended to carry high-speed and high-volume traffic; their geometric layout and standard of construction cannot be compared with Interstate-type highways. Factors such as park terrain, aesthetics and ecology often took higher priority over safety during original design considerations. Traffic in national parks and on park lands has increased considerably over the years. Though not by design, many parkways near major metropolitan areas have been transformed into main traffic arteries. While research and legislation have established a comprehensive set of standards to make the Nation's highways safer for drivers, safety provisions on park roads and parkways continue to lag behind. This project represents part of a concerted effort by the NPS and the FHWA to improve the safety performance of park road and parkway appurtenances without

sacrificing their aesthetic effect.

The absence of standardization has resulted in many different designs and practices depending on regional conditions and local preferences. These designs can be generically divided into timber construction and masonry construction. The masonry finish could be of smooth or rough stone. Timber guardrails may or may not have steel reinforcement and they employ a variety of post and joint designs. Many types of terminal designs are also used with the guardrails.

3. TEST CRITERIA FOR PARK ROADS AND PARKWAYS

a. General Description

The test criteria for park roads and parkways were developed using the inputs from the project work and NCHRP 230. In general, NCHRP 230 presents a good set of test conditions for evaluating these railing systems. The approach stated in this discussion is to use the NCHRP 230 tests as a baseline and to add supplemental tests, as needed.

The park road environment, as discussed above, presents an unique set of potential accident scenarios, along with an unusual set of roads and vehicle mix not seen in the same ratios as on the major highways. The following sections discuss some of the considerations which were used when developing test criteria.

(1). Impact Angle

The park roads and parkways are comprised of two distinct sets of roadways. One set is made up of urban highways, such as the Baltimore-Washington Parkway and the George Washington (GW) Parkway, which are used as commuter highways and have speed limits as high as 55 mi/h (24.6 m/s). The other set is the traditional set of roadways which come to mind when thinking of U. S. parks. These are comprised of curving, scenic roads with lower speed limits.

On the first set of roadways impact angles are typical of those seen on the Nation's Interstate freeways. But with the second set, winding roads can lead to the potential of very high impact angles. For example, a driver could loose control on a sharp curve, go straight across the road and impact the barrier at 30, 40, or even 45 degrees. For this reason higher impact angles should be explored.

(2). Impact Speed

Except for those roadways which are used as major commuting routes, vehicle speed on the parkway system is lower than that of the general freeway system. This comes about because of lower speed limits, as well as the plain fact that vehicles travel slower on curved, hilly scenic roads and heavy vehicles travel

slower. Of course, barrier systems could be built which would redirect vehicles at any speed, but the cost grows very rapidly and thus; a tradeoff is required.

As part of this project, vehicle speed data was determined for some of the parkways. The speed limit and 85th percentile speeds are reported in the next section, Task A - Survey. Reviewing this data it can be seen that maximum speed limits vary from 35 to 55 mi/h (15.6 to 24.6 m/s), with the average being 45 to 50 mi/h (20.1 to 22.4 m/s). This is considerably lower than the national speed limit of 55 mi/h (24.6 m/s) or 65 mi/h (29.1 m/s) on Interstate highways. The actual speed, as measured using the 85th percentile speed, shows lower speeds on roads where the speed limits are lower. The test criteria should include impact speeds at least as high as the 85th percentile speeds.

(3). <u>Vehicle Size and Weight</u>

The initial approach should be to use the current and established test vehicle weight classes to evaluate park barriers from NCHRP 230. These include 1800-lb (817-kg) and 4500-lb (2043-kg) vehicles. On the other hand, the unusual park vehicle population dictates that considerations be made for heavier and larger vehicles, i.e. trucks, overloaded station wagons, and campers/motor homes/recreation vehicles (RVs).

A summary for several parks of the vehicle mix is presented in subsection 2 of the next section. The average daily traffic (ADT) range and mix of vehicle classes is also presented. Considered were passenger vehicles, RVs, vehicles with trailers, and buses and trucks. With the exception of the commuter highway (GW Parkway), the vehicle mix is highly populated with non-passenger vehicles (11 to 17 percent).

b. Test Criteria

The test types specified in NCHRP 230 are divided into two categories for longitudinal barriers: 1) the standard minimum matrix and 2) typical supplemental tests. The following is a discussion of the standard test types.

<u>Test 10: 4500S, 60 mi/h, 25 degrees</u> (2043 kg, 26.8 m/s)

This test is the standard strength test of a barrier installation. It determines the barriers ability to redirect a large sedan vehicle smoothly without vaulting or snagging.

<u>Test 11: 2250S, 60 mi/h, 15 degrees</u> (1022 kg, 26.8 m/s)

This test has been replaced with test 12.

Test 12: 1800S, 60 mi/h, 15 degrees (817 kg, 26.8 m/s)

This test determines occupant risk during the crash event. The vehicle must remain upright and be smoothly redirected without snagging or pocketing.

There are nine supplementary tests described in NCHRP 230. They include variations on the standard tests as well as tests using larger vehicles, ranging in weight from 20000 lb to 80000 lb (9080 kg to 36320 kg). The following is a discussion of the part of these tests which pertain to park type rails.

Test S13: 1800S, 60 mi/h, 20 degrees (817 kg, 26.8 m/s)

This test is similar to test 12 with the impact angle increased to 20 degrees. This test determined the potential for wheel snag and pocketing of the small vehicle. To be acceptable, the vehicle should be smoothly redirected without snagging or pocketing. Also, the vehicle would remain upright, and post-collision trajectory should not produce a hazard.

Test S14: 4500, 60 mi/h, 15 degrees (2043 kg, 26.8 m/s)

This test is similar to test 10 with the impact angle reduced to 15 degrees. Its primary purpose is to evaluate multiple service level (MSL) 1 systems which are used in low traffic volume roadways. This test could be used to evaluate low performance park rails.

Test S15: 40000P, 60 mi/h, 15 degrees (18160 kg, 26.8 m/s)

This test uses a 40000-lb (18160-kg) intercity bus to impact a railing system. It is intended to evaluate the strength of a MSL 3 railing system. The performance should be similar to test 10. These railings are intended for high traffic volume roads and/or roads where there are higher percentages of heavy vehicles.

Test S16: 20000P, 45 mi/h, 7 degrees (9080 kg, 20.1 m/s)

This test is a low impact severity test with a large vehicle (20000-lb (9080-kg) school bus). It is designed to test MSL 1 railings.

Test S19: 32000P, 60 mi/h, 15 degrees (14528 kg, 26.8 m/s)

This test is between test S18 and S15 in impact severity. It uses a small intercity bus as the test vehicle.

Test S20: 80000A, 50 mi/h, 15 degrees (36320 kg, 22.4 m/s)
Test S21: 80000F, 50 mi/h, 15 degrees (36320 kg, 22.4 m/s)

These tests are designed to be used to test railings which are installed in special site locations where containment of heavy trucks is absolutely required.

As can be seen, a wide variety of tests are available for selection for evaluating the parkway barriers. The need for containment of large trucks is probably of low priority on parkways. However, the need for protection of vehicles from intercity buses to mini-sized vehicles is required, with bus protection needed in special site locations, and passenger vehicle protection needed throughout the parkway system. It can also be seen that NCHRP 230 provides for various service level application railing systems.

Areas of concern in the parkway system are: 1) lower impact speeds, 2) higher possible impact angles at special site locations, and 3) new vehicle mix. Lower impact speeds can be accommodated with NCHRP 230 by testing at a lower MSL, such as MSL 1 type tests. The higher impact angles are most likely associated with lower speeds, such as vehicles traversing switchback turns or other curves. In these cases, tests with higher impact angles should be combined with lower impact speeds. To obtain the mix of test vehicles, at least 2 and maybe 3 test vehicles need to be added. These include: 1) RVs, 2) truck/car with pull behind camper combinations, and 3) trucks with higher centers of gravity.

Table 1 lists the parkway supplemental (PS) tests that could be added to the NCHRP 230 test matrix in order to fully cover the park road environment.

Table 1. Parkway supplemental test matrix.

Test Type	Vehicle Type	Speed (mi/h)	Angle (degrees)	Location
PS1	4500S	45	45	midspan @ splice
PS2	1800S	45	45	midspan @ splice
PS3	10000RV	50	15	midspan @ splice
PS4	10000RV	60	15	midspan @ splice
PS5	15000C	40	15	midspan @ splice
PS6	15000C	40	15	midspan @ splice
PS7	5400T	60	25	midspan @ splice
PS8	5400T	60	15	midspan @ splice

Key: S = Sedan, RV = Recreational Vehicle, C = Combination of pickup truck and travel trailer, T = High center of gravity pickup truck

1 mi/h = 0.45 m/s

Tests PS1 and PS2 are for the evaluation of rail systems where high impact angles might occur at lower speeds. Smooth redirection would be the design goal. Tests PS3 and PS4 are two service level tests with RV-type vehicles. The highest speed and angle were selected to be in concert with NCHRP 230 speeds. In these tests, smooth redirection without overturn would be the design goal. Occupant injury would also be evaluated. Tests PS5 and PS6 are the tests of the combination unit consisting of a 3/4-ton (681-kg) pickup pulling a trailer. These tests would evaluate the smooth redirection capabilities of a combination-type test vehicle. The two test speeds of 40 and 50 mi/h (17.9 and 22.4 m/s) were selected because these vehicle types tend to travel more slowly. An additional test could be added for a 60-mi/h (26.8-m/s) impact. The last two tests (PS7 and PS8) are high center of gravity, 3/4-ton (681-kg) pickup truck tests. These vehicles consist of two major groups, the recreational type with big tires and high mounted chassis and the standard type trucks with high mounted loads such as a camper. The speed was selected to be in concert with NCHRP 230 tests 10 and S14 which represent two service levels.

TASK A - SURVEY

Under this task, the contractor conducted a survey to determine the different types of longitudinal barriers and barrier designs currently in use on park roads and parkways, as well as the designs planned for future use. The survey consisted of visits to each of the FHWA Federal Lands Highway Division headquarters. In addition to the barrier information data, limited information concerning vehicle mix and accident statistics was also collected. This section provides a summary of the survey results.

1. LONGITUDINAL BARRIERS/BARRIER DESIGNS

To accurately collect information nationwide, visits were made to the Denver Service Center (DSC) of the NPS and to each of the FHWA Federal Lands Highway Divisions. The principal investigator met with FHWA personnel in each Division to review the road inspection program (RIP), the NPS photolog system, and FHWA contract plans. Key contacts within each division are listed in table 2.

Table 2. FHWA and NPS contact personnel by division.

Division	Survey Date	Contacts
EFLHD	2/11-12/88	A. Teikari C. Conner T. Welch
CFLHD	3/19-20/88	S. Samuelson R. Cushing R. Nestel
WFLHD	2/19-20/88	R. Wassill A. Stockman D. O'Brien L. Moss
DSC	3/23/88	J. Straughan

The barrier survey divided NPS longitudinal barriers into generic groups, such as wooden, steel, stone, concrete, etc. A survey data sheet was developed and distributed to each survey location prior to the arrival of the contractor. The parameters collected fully document the geometry, construction, location, amount in use, aesthetic rating, and maintainability of a representative sample of each barrier installation within each park.

The procedure to summarize the type and amount of barriers within each division consisted of the following:

- Review RIP reports to collect statistics on each park within each region.

- Review NPS photolog system to verify RIP data and to collect data for parks missing RIP data.
- Meet with Division engineers to confirm results and to collect additional data not documented in the said sources.
- Review contract plans for the last 5 years to collect data for recent installations and to document the future plans within each Federal lands highway division.

Table 3 provides a statistical summary of the barrier systems that exist within NPS parks and park responsibilities. Overall, NPS includes 242 parks/national historic sites, 8086 road miles (13010374 m), and 300 barrier miles (482700 m) (3.7 percent of the road miles). The primary barrier systems used are wood with steel backed guardrail, W-beam guardrail, and rough stone guardwall.

Table 3. National Park Service guardrail/guardwall summary.

FHWA Division	EFLHD	CFLHD	WFLHD	Total
Number of Parks	127	94	21	242
Road Miles	2733	3944	1409	8086
Guardrail Systems				
Concrete	1	0	0	1
Wood without Steel	54	1	14	69
Timber and Steel	6	0	0	6
Steel	16	28	43	86
Wire and Post	0	0	2	3
Guardwall Systems				
Old	38	9	20	68
Rough Stone Masonry	20	2	0	22
Smooth Stone Masonry	0	0	0	0
Guide Rail Systems				
Stone Fence	8	0	0	8
Spaced Stone	35	1	2	38
TOTAL	178	41	81	301

1 mi/h = 0.45 m/s

a. Eastern Federal Lands Highway Division

EFLHD parks contain the highest percentage (6.5 percent) of barrier miles of the three Divisions. This is due to the rolling nature of the east coast and the high-speed requirements of the Nation's capital parkways. The primary barrier systems currently used by EFLHD are timber with steel-backed guardrail, W-beam with timber post guardrail, and stone masonry guardwall. The primary parks of this region are the George Washington Parkway, Shenandoah National Park, Baltimore-Washington Parkway, Blue Ridge Parkway, and Great Smokey Mountain Park.

b. Central Federal Lands Highway Division

Due to the geography and low ADT levels within CFLHD, the percentage of barrier installations (1 percent) is well below the other two Divisions. The primary barrier systems are galvanized and COR-TEN W-beam with timber post guardrails and stone masonry guardwall.

c. Western Federal Lands Highway Division

In the WFLHD, the percentage of barrier installation, (5.8 percent) is similar to EFLHD. The primary barrier systems used or forecast for use by WFLHD are COR-TEN W-beam with wood post guardrail, blocked-out timber or log with steel backed guardrail, removable timber guardrail with steel post, and stone parapet/retaining wall. The primary parks of this region are Glacier National, Yellowstone, Grand Teton, Mount Rainer, and Olympic National.

2. VEHICLE MIX

During the visit to the DSC, traffic engineering safety studies of seven major NPS parks were retrieved. These studies were conducted between 1979 and 1983 by consulting contractors. In recommending traffic safety improvements, each study performed accident analysis and traffic operations and safety assessment. Table 4 summarizes the key findings of vehicle classification, accident data, and traffic characteristics of these parks.

In summary, the vehicle classification mix for the seven parks was determined to be:

89.8 percent passenger cars and motorcycles
4.3 percent recreation vehicles
4.4 percent vehicles with trailers
1.5 percent buses and trucks

The percentage of vehicle accidents is closely related to the vehicle mix.

Table 4. Traffic engineering safety study summary.

Park	GW Parkway	Grand Teton	Lake Mead	Yosemite	Yellowstone	Sequoia Kings Canyon	Chickamauga/ Chattanooga	
Location	VA,MD,DC	WY	AZ,NV	CA	WY	CA	TN,GA	
Posted Speeds (mi/h)	40-50	15-55	15-50	25-35	15-55	25-45	25-45	
ADT	3500-41000	300-3100	40-1500	1000-5500	1000-5500	600-2600	400-12400	
Vehicle Classification (percent)								Average
Car & Motorcycle	100.0	86.0	83.0	88.6	89.1	92.0	n/a	89.8
RV	-	4.7	3.7	5.7	7.3	4.6	n/a	4.3
Vehicle with Trailer	-	7.0	13.3	2.9	2.8	2.8	n/a	4.4
Buses and Trucks	-	2.3	n/a	3.8	0.8	0.5	n/a	1.5
Accident Data								
Number Per Year	683	169	159	493	476	135	51	311
Percent Fixed Object	16.5	17.5	n/a	7.0	n/a	n/a	25.0	14.6
Percent Day	75	90	77	79	78	75	74	78
Percent Dry	72	85	95	67	84	85	86	82
Percent Car	100	81	n/a	85	77	86	96	88
Percent RV, Truck or Bus	-	15	n/a	10	12	10	2	8
Percent Motorcycle	-	4	n/a	5	6	4	2	4

1 mi/h = 0.45 m/s

3. SPEED/ACCIDENT RESULTS

The results of the traffic safety studies of speed are shown in table 5.

Table 5. Traffic engineering speed study summary.

Park	Maximum Posted Speed (mi/h)	85th Percentile Speed (mi/h)
GW Parkway	50	65
Grand Teton	55	61
Lake Mead	50	60
Yosemite	35	49
Yellowstone	45	56
Sequoia/Kings Canyon	45	51

1 mi/h = 0.45 m/s

This indicates that within some parks the design speeds (85th percentile) range from 5 to 15 mi/h (2.2 to 6.7 m/s) in excess of the posted speeds. In addition, the design speeds within three of the six listed parks were at multiple service level two conditions, i.e. 60 mi/h (26.8 m/s).

A computerized accident data base exists within the National Capitol Region according to five classes of accidents: other vehicle, fixed objects, pedestrian, non-collision, and other. Unfortunately, the database does not contain impact speed, impact angle, fixed object type, and vehicle type. Thus, the data base has little value to the study other than general information concerning light conditions, weather conditions, and fatality/injury information.

TASK B - ANALYSIS

The purpose of the analysis task was to provide analytical insight into the test criteria and test conditions that will make up the full-scale crash tests of task E. Analysis was performed in the following areas: vehicle rollover analysis, barrier structural analysis, and pendulum tests. This section documents the findings of task B.

1. VEHICLE ROLLOVER ANALYSIS

Analysis of vehicle rollover was performed for five typical longitudinal barrier systems and the seven vehicle types referred to in NCHRP 230. The five barrier systems consisted of a standard W-beam rail, a standard thrie beam rail, a stone masonry guardwall, the EFLHD timber guardrail, and an old version of the timber rail system. This overturn analysis was performed on an IBM PC using a 60 mi/h (26.8 m/s), 15 degree impact and a 5 degree redirection as the test conditions.

The rollover analysis was performed using a Lotus 1-2-3 worksheet. Using a simple approach, the rollover impulse during an impact was compared to the inertial stability of the vehicle. The rollover impulse was derived by computing the lateral change in momentum from the impact multiplied by the vertical lever arm. The lever arm was determined by the difference in vehicle center of gravity (cg) height and the effective height of the barrier being impacted. For example if the vehicle had a cg height of 30 in (0.76 m) and the barriers effective height was 27 in (0.69 m) then the lever arm would be 3 in (0.08 m). The lever arm for a vehicle with a lower cg than the barrier was considered zero, and the potential for rollover was not considered.

The impulse into the vehicle causes the vehicle to roll toward the loaded side. The major force which tends to keep the vehicle stable is the force of gravity. The amount of energy required to raise the vehicle to a roll angle where the cg was above the pivot point was computed. This is considered the critical roll angle. The impulse applied to the vehicle during the crash was compared to the energy required to obtain the critical roll angle. If the impulse was greater, then rollover was assumed, and vice versa, if the impulse was lower, then the vehicle was assured to right itself. In the latter case, the barrier was assumed to have appropriate height for the impacting vehicle. This analysis procedure is presented in appendix A.

The five barrier systems are discussed below.

<u>Standard W-beam Guardrail</u>
The standard W-beam guardrail consisted of a W6x9 steel post and blockout with the W-beam mounted at 27 in (0.69 m). The post spacing was assumed to be 6 ft, 3 in (1.9 m).

Standard Thrie Beam Guardrail
This rail uses a standard thrie beam rail section mounted at 32 in (0.81 m). The posts, blockouts and post spacing are similar to the W-beam guardrail.

Stone Masonry Guardwall
The stone masonry guardwall system consists of a concrete T-shaped core set on a gravel fill, covered with a masonry face. Full width coping stones cover the top. The height to the top of the coping stones is 27 in (0.69 m).

Blocked-out, Steel-backed Timber Guardrail
This system consists of 10-in by 12-in by 7-ft (0.25-m by 0.30-m by 2.1-m) posts and 6-in by 10-in (0.15-m by 0.25-m) rails. The rails are backed with a 6-in by 0.375-in (0.15-m by 0.010-m) steel plate. The post spacing is 10 ft (3.0 m). A 4-in (0.10-m) blockout is installed between the rail and the post. The mounting height of the wooden rail is 27 in (0.69 m).

Timber Guardrail, old type
In this system, 5-ft, 8-in long by 10-in by 12-in (1.73-m long by 0.25-m by 0.30-m) posts are used to hold up a wooden rail. There are no blockouts or steel backing plates. The mounting height is 20 in (0.51 m).

Table 6 presents a summary of the model results. Overall, for the given test conditions, it can be seen that the three passenger vehicles types are safe for all barrier systems listed while the buses and tractor/trailers are unsafe for most of the systems.

2. LONGITUDINAL STRENGTH OF GUARDRAIL SYSTEMS

Design guidelines for guardrail systems required that they should withstand 50 kip (222500 N) tensile loadings in the longitudinal direction. Analysis of three current NPS guardrail systems in use or under design was performed according to the strength of the rail/splice plates and the bolted connections. The three guardrail systems evaluated are the timber with steel backed system used by EFLHD, the blocked-out and redesigned timber with steel-backed system proposed by WFLHD, and the log with steel-backed system proposed by WFLHD. Table 7 presents a summary of the results of this analysis.

In summary, the EFLHD timber system does not have adequate tensile strength in the longitudinal direction. The WFLHD timer system has adequate tensile strength, and most of the elements of the WFLHD log system have adequate tensile strength. To increase the tensile strength of the EFLHD system, the thickness of the splice plate should be increased to 0.375 in (0.010 m). The number of bolts should be increased by two, i.e. changed to four 0.75-in (0.019-m) bolts. The WFLHD log system would have adequate tensile strength if the thickness of the rail element is

Table 6. Rollover analysis results.

	Std W-Beam	Std Thrie Beam	Stone Masonry	Timber Steel Blocked-out	Old Type Timber
Mounting Height (in)	27	32	27	27	20
Effective Height (in)	24	29	27	26	17
Vehicle Type					
1,800-lb	ok	ok	ok	ok	ok
2,250-lb	ok	ok	ok	ok	ok
4,500-lb	ok	ok	ok	ok	ok
20000-lb	roll	ok	ok	roll	roll
32000-lb	roll	roll	roll	roll	roll
40000-lb	roll	roll	roll	roll	roll
80000-lb	roll	roll	roll	roll	roll

1 in = 0.03 m 1 lb = 0.45 kg

Table 7. Barrier system analysis results.

	EFLHD Timber	WFLHD Timber	WFLHD Log
Rail Strength	acc	acc	acc
Splice Strength	acc	acc	acc
Bolt Bearing Failure	unacc	acc	acc
Bearing Failure of Rail	unacc	acc	unacc
Bearing Failure of Splice	unacc	acc	acc
Shear of Bolts	unacc	acc	acc
Tear Out	acc	acc	acc

acc = acceptable strength capability, unacc = system has weak link and should be reviewed in the appropriate area

increased from 0.3125 in (0.008 m) to 0.375 in (0.010 m). This analysis is presented in appendix B.

3. PENDULUM TESTS

To test the bending strength of NPS timber posts, three pendulum tests were conducted at the FHWA pendulum facility located at the Turner-Fairbank Highway Research Center in McLean, VA. Timber posts 10 in by 8 in (0.25 m by 0.20 m) were installed in compacted strong soil at the break point of a 1.5:1 foreslope. The first test had a post embedment depth of 42 in (1.07 m) (standard design) while the second test had a post embedment depth of 52 in (1.32 m). The third test was conducted with the same conditions as the first test to confirm the results. The posts were oriented with the impact against the 10-in (0.25-m) face. All tests were conducted using a 2250-lb (1022-kg) mass with minicompact sedan crush characteristics, at 20 mi/h (8.9

m/s). This corresponds to an impact severity of 30.1 kip-ft (40786 N-m), which is slightly higher than the impact severity level of an NCHRP type S13 test (Honda Civic, 60 mi/h (26.8 m/s), 20 degrees).

Results of these tests showed that the posts in tests 1 and 3 pushed away at 45 degrees while the post in test 2 broke away 20 in (0.51 m) below the ground level. The test 2 break occurred close to the theoretical location of the maximum moment. This occurs at the 3/8 embedment point or 19.5 in (0.50 m) below grade for this installation. Figure 1 is a force-displacement plot of the three tests. This was produced by instrumenting the posts with displacement transducers to measure the post movement at ground level and the pendulum with an accelerometer which was multiplied by the weight to obtain force. Other test equipment used during the test included a high-speed movie camera.

Pendulum test results indicated three key findings. First, increasing the post embedment depth by 10 in (0.25 m) (24 percent) increased the maximum force from 15.5 kips (68975 N) to 21 kips (93450 N), a 35 percent increase. This more fully utilizes the strength of the post/soil system. Secondly, the Douglas Fir used in test 1 and the Southern Pine used in test 3 had nearly identical results. A grading analysis of the two posts indicated that they were both Number 1 dense stress-rated. Analysis was performed using the maximum load on the post and its physical properties. Using MC/I calculations for bending stress, the maximum bending stress for the broken post was calculated to be approximately 8000 lb/in^2 (55120 kPa). This is in excess of the allowable stress of 1750 lb/in^2 (12058 kPa) given in the Grader's Manual, Southern Pine Inspection Bureau, 1977 Edition.[1]

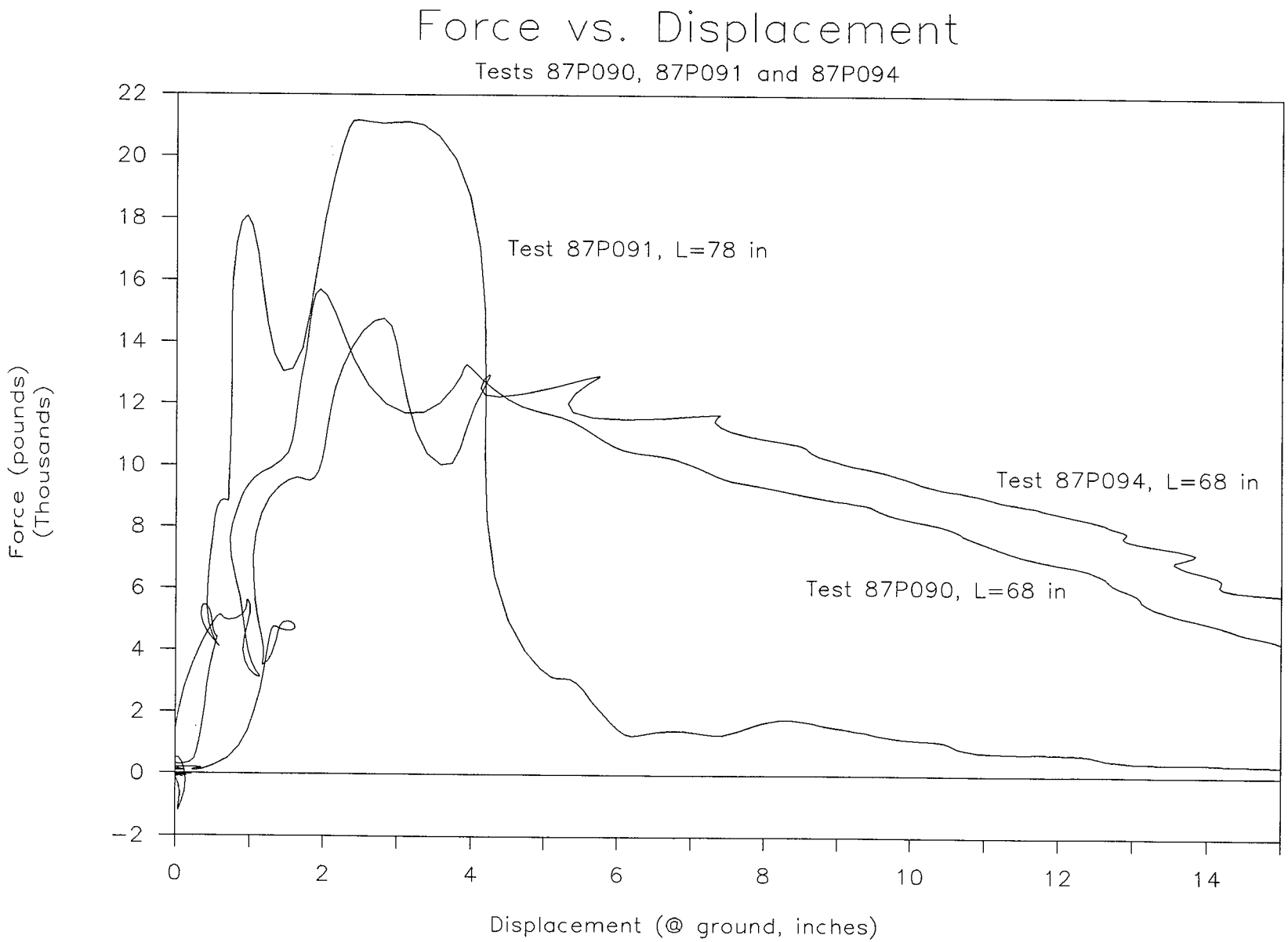

1 in = 0.03 m 1 lb = 4.45 N

Figure 1. Force-displacement plot for pendulum tests.

TASK C - BARRIER DESIGN

This task improved barrier performance through redesign efforts. The systems redesigned included the timber guardrail system, the stone masonry guardwall system and the log guardrail system. This section summarizes these design efforts for each system.

1. TIMBER GUARDRAIL SYSTEM

The timber guardrail system is described in the test program development section. It consists of blocked-out timber rails reinforced with steel backing and held up by timber posts. This section presents various design concepts viewed for potential application to this system.

a. Effects of Post Cross Section Reduction

The WFLHD redesign of the steel-backed timber guardrail system included a reduction in the post size from a 12-in by 10-in (0.30-m by 0.25-m) cross section to a 10-in by 8-in (0.25-m by 0.20-m) cross section. The following documents the effect of reducing post size on bending stress and shear stress. Figure 2 shows front and top views of a standard post installation.

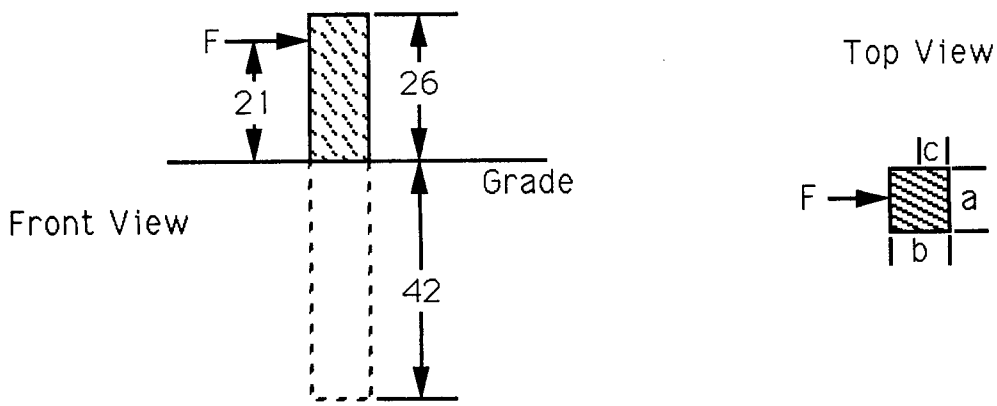

1 in = 0.03 m

Figure 2. Standard post installation.

The following is a comparison and analysis of the cross section for the timber posts.

The area for each post is:

$$Area_{12,10} = (a)(b) = (12)(10) = 120 \text{ in}^2 \ (0.077 \text{ m}^2)$$

$$Area_{10,8} = (a)(b) = (10)(8) = 80 \text{ in}^2 \ (0.052 \text{ m}^2)$$

The distance from the neutral axis to the outer fiber (c) is:

$c_{12,10}$ = 5 in (0.13 m)

$c_{10,8}$ = 4 in (0.10 m)

The area moment of inertia for each post is:

$$I_{12,10} = \frac{1}{12}(a)(b)^3 = \frac{1}{12}(12)(10)^3 = 1000 \text{ in}^4 \ (0.00042 \text{ m}^4)$$

$$I_{10,8} = \frac{1}{12}(a)(b)^3 = \frac{1}{12}(10)(8)^3 = 427 \text{ in}^4 \ (0.00018 \text{ m}^4)$$

The bending stresses are:

where Moment = (Force)(Lever Arm) = (F)(21+16)

$$\text{Bending Stress}_{12,10} = \frac{Mc}{I} = \frac{(F)(37)(5)}{1000} = (F)(0.185)$$

$$\text{Bending Stress}_{10,8} = \frac{Mc}{I} = \frac{(F)(37)(4)}{427} = (F)(0.347)$$

The ratio of bending stresses for the two posts is:

$$\frac{\text{Bending Stress}_{10,8}}{\text{Bending Stress}_{12,10}} = \frac{(F)(0.347)}{(F)(0.185)} = 1.87$$

Thus, under the same loading, the 10-in by 8-in (0.25-m by 0.20-m) post experiences bending stresses 87 percent higher than the 12-in by 10-in (0.30-m by 0.25-m) post.

The shear stresses for the two posts are:

$$\text{Shear Stress}_{12,10} = \frac{F}{A} = \frac{(F)}{(120)}$$

$$\text{Shear Stress}_{10,8} = \frac{F}{A} = \frac{(F)}{(80)}$$

The ratio of shear stresses is:

$$\frac{\text{Shear Stress}_{10,8}}{\text{Shear Stress}_{12,10}} = \frac{(F)/(80)}{(F)/(120)} = 1.50$$

Thus, under the same loading, the 10-in by 8-in (0.25-m by 0.20-m) post experiences shear stresses 50 percent higher than the 12-in by 10-in (0.30-m by 0.25-m) post.

It should be noted that these comparisons are only a relative assessment of the strengths of the two posts under similar loadings. Depending upon the post spacing and the post embedment depth, the increased capacity of the larger post may, or may not, be needed to have the guardrail redirect an errant vehicle. The 8-in by 10-in (0.20-m by 0.25-m) post was used by WFLHD for the initial design for aesthetic considerations, and because this post size would result in a 33 percent cost saving over the 10-in by 12-in (0.25-m by 0.30-m) post. The full-scale test showed that the larger post size was necessary.

b. Effects of Soil Plates on Post Deflection

In a previously conducted study, a series of 15 and 20 mi/h (6.7 and 8.9 m/s) pendulum tests on standard 6-in (0.15-m) I-beam posts with and without soil plates was conducted.[2] The following summarizes the results of these tests in two discussions.

(1). <u>Level Ground Pendulum Tests</u>

Three 15 mi/h (6.7 m/s) pendulum tests were conducted. The test conditions were:

- 6-ft post (1.8-m), level ground, 44-in (1.12-m) embedment depth, 8-in high by 8-in wide (0.20-m by 0.20-m) soil plate located 2 in (0.05 m) below grade, Virginia 21A soil (NCHRP 230 S-1 soil), FHWA FOIL test number 86P043,

- 6-ft post (1.8-m), level ground, 44-in (1.12-m) embedment depth, 12-in high by 8-in wide (0.30-m by 0.20-m) soil plate located 2 in (0.05 m) below grade, Virginia 21A soil, FHWA FOIL test number 86P044, and

- 6-ft post (1.8-m), level ground, 44-in (1.12-m) embedment depth, 8-in high by 12-in wide (0.20-m by 0.30-m) soil plate located 2 in (0.05 m) below grade, Virginia 21A soil, FHWA FOIL test number 86P045.

All test conditions were the same except the size and orientation of the 0.375-in (0.010-m) thick steel soil plates. The results of the tests are shown in table 8. The impact severity of these tests was 17.3 kip-ft (23442 N-m), less than the small car, 60 mi/h (26.8 m/s), 20 degree test specified in NCHRP 230.

The goal of barrier post design is to make a post that utilizes the full strength of the soil/subgrade. In other words, the post should bend or break just before pushing away through the soil.

Table 8. 15 mi/h, soil plate pendulum tests.

Test	Maximum Post Deflection (in)	Did the Post Bend?	Max Post Angle (degrees)	Peak Force (kips)
8-in by 8-in soil plate, FOIL 86P043	15.0	No	31	9.0
12-in by 8-in soil plate, FOIL 86P044	15.0	No	34	9.6
8-in by 12-in soil plate, FOIL 86P045	8.2	Yes	42	7.7

1 in = 0.03 m 1 kip = 4450 N

Posts that push through the soil are generally over designed for the soil conditions.

Based on the results of these tests, the following observations can be made:

- The 8-in high by 12-in wide (0.20-m by 0.30-m) soil plate was the best of the three since it caused minimum deflection and the post bent.
- A properly oriented soil plate reduced post deflection by as much as 6.8 in (0.17 m) or 45 percent.
- Soil plates are more effective when oriented laterally. This raises the centroid and the bearing area at the centroid.
- Given the size of the timber posts in the NPS timber guardrail system, larger soil plates are required.

(2). Foreslope Pendulum Tests

Five 20 mi/h (8.9 m/s) pendulum tests were conducted. The test conditions were:

- 6-ft (1.8-m) post, level ground, 44-in (1.12-m) embedment depth, no soil plate, Virginia 21A soil, FOIL test number 87P079,
- 6-ft (1.8-m) post, at break of 1.5:1 foreslope, 44-in (1.12-m) embedment depth, no soil plate, Virginia 21A soil, FOIL test number 87P080,
- 6-ft (1.8-m) post, at break of 1.5:1 foreslope, 44-in (1.12-m) embedment depth, 18-in high by 24-in wide by 0.25-in thick (0.46-m by 0.61-m by 0.006-m) soil plate located 2 in (0.05 m) below grade, Virginia 21A soil, FOIL test number 87P089,

- 6-ft (1.8-m) post, 1 ft (0.30 m) from break of 1.5:1 foreslope, 44-in (1.12-m) embedment depth, Virginia 21A soil, no soil plate, FOIL test number 87P083, and

- 7-ft (2.1-m) post, at break of 1.5:1 foreslope, 56-in (1.42-m) embedment depth, Virginia 21A soil, no soil plate, FOIL test number 87P081.

The soil and impact speed were the same but the test conditions, post length and location varied. The soil plate used is a standard breakaway cable terminal (BCT) soil plate. The impact severity of these tests was 30.7 kip-ft (41599 N-m), which is slightly higher than the small car, 60 mi/h (26.8 m/s), 20 degree test specified in NCHRP 230. The results of these tests are shown in table 9.

Table 9. 20 mi/h, soil plate pendulum tests.

Test	Maximum Post Deflection (in)	Did the Post Bend?	Did the Soil Plate Bend?	Peak Force (kips)
6-ft post, level ground, no soil plate, FOIL 87P079	10.5	Yes	n/a	16.2
6-ft post, @ Break, no soil plate, FOIL 87P080	20.5	No	n/a	8.5
6-ft post, @ Break, soil plate, FOIL 87P089	23.5	No	Yes	16.0
6-ft post, 1 ft from break, no soil plate, FOIL 87P083	12.8	Yes	No	17.8
7-ft post, @ Break, no soil plate, FOIL 87P081	13.4	Yes	n/a	20.7

1 in = 0.03 m 1 kip = 4450 N 1 ft = 0.30 m

Based on the results of these tests, the following conclusions can be drawn for the given impact severity:

- Adding soil plates to posts at breakpoints of backslopes provides questionable benefit. The post with a soil plate still pushed away and the displacements were similar. However, the peak force was practically doubled, which improves the redirection potential.

- At foreslope breakpoints, increasing the embedment depth by 1 ft (0.30 m) reduces the displacement from 23.5 to 13.4 in (0.60 m to 0.34 m) (57 percent). Additionally, the peak force of the post was increased by 29 percent, which gives better redirection potential.

- Posts (with or without soil plate) located at breakpoints of backslopes deflect twice as much as those on level ground or even 1 ft (0.30 m) from the breakpoint.

- The 0.25-in (0.006-m) thick soil plate should be increased to at least 0.375 in (0.010 m) thick. If the soil plate bends and the post pushes away, the soil plate is not strong enough.

The present NPS guardrail system uses 7-ft (2.1-m) long timber posts embedded 58 in (1.47 m). Test results indicate 8 in (0.20 m) to 10 in (0.25 m) of lateral post displacement under NCHRP 230 test 10 conditions. Increasing the embedment depth another 6 to 12 in (0.15 to 0.30 m) will probably reduce the lateral deflection to approximately 4 in (0.10 m). This is based on conservative engineering judgement that post displacement is changed by the ratio of embedment depth squared, (L^2). However, the economics of posts 1 ft (0.30 m) longer and holes 1 ft (0.30 m) deeper are probably not merited. For 6-in (0.15-m) I-beams, which can be driven easily, increasing the depth by 1 ft (0.30 m) is more feasible. The use of 18-in high by 24-in wide by 0.375-in thick (0.46-m by 0.61-m by 0.010-m) soil plates with timber posts should reduce the lateral post displacement to an acceptable level. This modification, coupled with improved rail design and a reduced post spacing, should make the timber guardrail system acceptable according to NCHRP 230 evaluation criteria.

The rail designer must compare these two options to determine which is more feasible and cost effective for the particular installation. Basically, the tradeoff is 1 ft (0.30 m) of post for 45 lb (20.4 kg) of steel plate. The steel plate needs to be galvanized and attached to the post, thus adding cost. Also, additional installation time may be required. The longer post may require a larger post driving machine.

2. NEW DESIGN OF NPS TIMBER GUARDRAIL SYSTEM

The NPS uses a variety of longitudinal barrier systems, as needed, along approximately 8100 mi (13032900 m) of park roads. Timber guardrail systems (with and without steel reinforcement) are popular barriers due to their aesthetics for blending into the park environment. Within the EFLHD of the FHWA, 38 percent of the NPS longitudinal barriers are wooden.

Through government sponsored research and testing the design of

timber guardrail systems has evolved over the last 3 years in an attempt to meet the structural adequacy criteria specified in NCHRP Report 230 (4500-lb (2043-kg) car, 60 mi/h (26.8 m/s), 25 degrees). The first step involved the addition of steel reinforcement to the back of the wood rail. The second step was an improvement in the connection details from installation and structural analysis standpoints. Recent improvements have been to increase the post embedment depth from 42 to 58 in (1.07 to 1.47 m) and to use 12-in by 10-in (0.30-m by 0.25-m) posts. Figure 3 provides an assembly drawing of the current timber system design that was investigated and crash tested during this contract.

In October 1987, a 4500-lb (2043-kg), 60 mi/h (26.8 m/s), 25 degree test (NCHRP 230 test 10) was conducted on the system shown in figure 3. The vehicle was redirected at 10 degrees and with a speed reduction of 36 mi/h (16.1 m/s). Furthermore, the vehicle tire snagged on the first post past the impact point, two posts were pushed back 8 to 10 in (0.20 to 0.25 m). The rail pocketed and the wooden portion snapped. The steel portion maintained its structural integrity. This test met the evaluation criteria of NCHRP 230. However, the rail could be improved. This section proposes improvements to the present system, compares it with a standard W-beam system, and provides new designs.

a. Improvements to Present System

A flaw with this rail system is that the vehicle bumper pushes under the rail and the front tire snags on one or more posts. Based on test analysis, it appears that approximately 3 in (0.08 m) of tire snag occurred. Another flaw with this timber guardrail system is the snapping of the rail under bending stress.

Two recommendations are made to alleviate these flaws. First, the rail should be thickened from 6 in (0.15 m) to 7 in (0.18 m). Using Mc/I calculations where $I = 1/12\ (b)(h)^3$, the 17 percent increase in rail thickness provides a 36 percent increase in bending resistance for the wood alone. This is a much easier and cheaper approach to stiffening the rail than to decrease the post spacing. A decrease in post spacing increases the installation time and labor cost significantly while thickening the rail by 1 in (0.03 m) has a negligible effect on installation time. This 1 in (0.03 m) generates an additional inch of blocked out space between the rail face and the post, lowering the potential for snag. Furthermore, a 1-in (0.03-m) increase in the rail thickness uses less wood material when compared to decreasing the post spacing from 10 ft (3.0 m) to 8 ft (2.4 m) for a 12-in by 10-in by 7-ft (0.30-m by 0.25-m by 2.1-m) post. From an economical standpoint, money is better spent in enlarging the rails than increasing the number of posts.

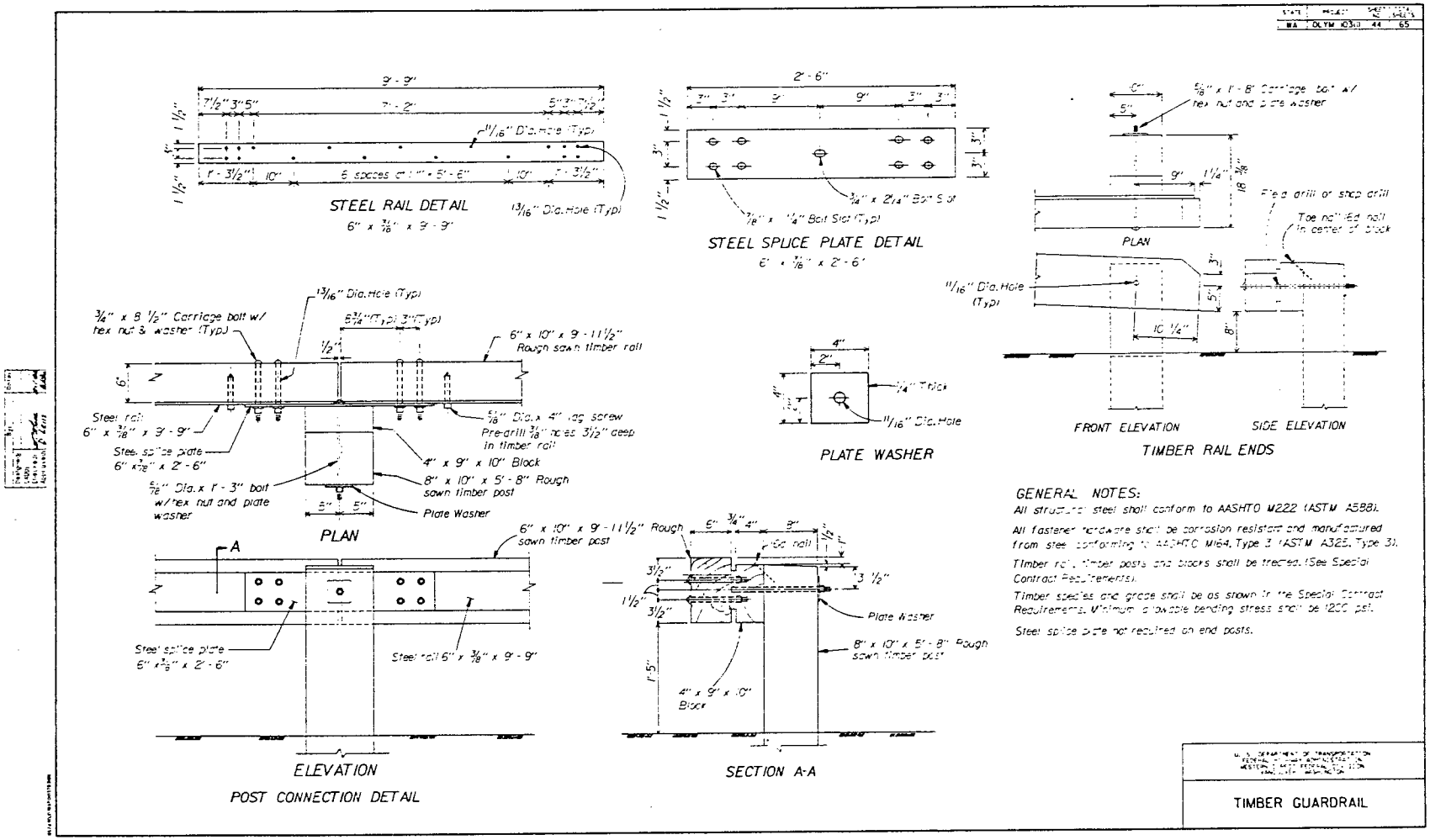

1 in = 0.03 m 1 ft = 0.30 m

Figure 3. Standard wooden guardrail system design.

The second recommendation is to increase the blockout distance from 4 in (0.10 m) to 6 in (0.15 m). Thus, the total post/blockout distance (including rail thickness) will be increased from 10.75 in (0.27 m) to 13.75 in (0.35 m). This additional 3 in (0.08 m) should help to eliminate snagging and result in cleaner redirection and higher redirection speeds.

b. Comparison to W-beam Steel System

Standard blocked-out W-beam steel guardrail systems have proven successful with a total post/blockout distance of 10.25 in (0.26 m). Given that the present timber rail system has a post blockout distance of 10.75 in (0.27 m), it is strange that the snagging problem occurs. Upon comparison of the two rail geometries, two factors are apparent. First, the W-beam rail face height is 12 in (0.30 m) versus the 10-in (0.25-m) timber rail face height. Since both systems have a rail height of 27 in (0.69 m) above ground, the W-beam rail system has 2 in (0.05 m) less ground clearance for the vehicle bumper and tire to squeeze under the rail. Since the bumper is a more rigid structural member than the front quarterpanel, it is very important that the barrier system receive the impact of the bumper.

The second factor is the rail face shapes. The W-beam rail is shaped to promote nesting of the vehicle bumper in the rail while the timber rail is flat and allows vertical sliding of the bumper. Nesting of the bumper keeps the vehicle from squeezing under the rail and it allows for much better redirection. Therefore, given the height and shape of the timber rail, it more readily allows for snagging of the vehicle tire. The next section suggests two improved designs.

c. Improved Designs

Based on the discussions in the two previous sections, two new designs are proposed. The first design uses a 7-in deep by 12-in high by 10-ft long (0.18-m by 0.30-m by 3.0-m) rail with 6-in (0.15-m) blockouts mounted to the same posts with the same post spacing shown in figure 3. Steel reinforcement and connection details would also remain the same. Using Mc/I calculations, the 7-in by 12-in (0.18-m by 0.30-m) rail provides more bending resistance than the present 6-in by 10-in (0.15-m by 0.25-m) rail. This should help to eliminate rail pocketing and snapping. The additional rail face height of 2 in (0.05 m), coupled with the additional blockout depth of 3 in (0.08 m), should also help to eliminate vehicle snagging.

The second proposed design uses two 6-in deep by 6-in high by 10-ft long (0.15-m by 0.15-m by 3.0-m) rails mounted vertically 3 in (0.08 m) apart on 6-in (0.15-m) blockouts, with the same posts and connection details as above. The blockouts will also be spaced 3 in (0.08 m) apart (instead of a one piece blockout for both rails) so that better nesting can occur. Each rail will be reinforced with 0.375-in thick by 4-in high (0.010-m by 0.10-m)

steel plates in case one rail picks up a larger share of the load. The split rail approach will provide better nesting characteristics but one with less post/blockout distance and 40 percent less bending resistance than the first system discussed. The split rail approach may also provide better aesthetics since viewing between rails is possible. If this system is desired by NPS, thicker rail elements may be required.

Figure 4 provides plan views of each system.

3. HIGH-SPEED WOODEN GUARDRAIL SYSTEM

Another conceptual redesign of the wooden guardrail system, which was proposed by the FHWA, is shown in figure 5. This system was meant to be used for high-speed (60 mi/h (26.8 m/s)) installations. When this system was designed, a modified version of the later successfully tested wooden guardrail system was modified for lower speed installations. The high-speed design included many improvements to the strength of the standard system.

This system consists of 10-in by 12-in by 7-ft (0.25-m by 0.30-m by 2.1-m) posts set on 8-ft (2.4-m) centers. The posts are embedded 58 in (1.47 m). The rails are 6-in by 10-in (0.15-m by 0.25-m) and are backed with a 0.375-in by 6-in (0.010-m by 0.15-m) steel plate. A 6-in by 0.375-in by 36-in (0.15-m by 0.010-m by 0.91-m) splice plate joins the rail sections with five 0.625-in (0.016-m) carriage bolts on each end of the rail sections. The splice plate attaches to the post with a 0.625-in (0.016-m) carriage bolt. A 4.75-in (0.12-m) diameter plate washer is used on the nut end of the post bolt. This washer is set in a 1.5-in (0.04-m) deep, circular recess cut into the post. The rail mounting height is 27 in (0.69 m).

A rubrail mounted to the posts provides additional strength. This rubrail is a 4-in by 2-in by 0.25-in (0.10-m by 0.05-m by 0.006-m) box beam 16 ft (4.9 m) long. The rubrail splice sleeve consists of a 0.1875-in (0.005-m) plate rolled into a C-section. The splice is anchored to the post with a 0.625-in (0.016-m) carriage bolt. The nut end of the bolt features a 4.75-in (0.12-m) diameter plate washer, set in a 1.5-in (0.04-m) deep, circular recess cut into the post. Only one end of the rail is attached to the splice sleeve at the splice post location. Two 0.375-in (0.010-m) bolts attach the rail to the splice and the rubrail-post bolt passes through the rubrail and the splice. The other end of the rail slides over the splice sleeve, overlapping 18 in (0.46 m). Splices occur at every other post location. The center of the rubrail is 12 in (0.30 m) above grade.

An 18-in high by 24-in wide by 0.375-in (0.46-m by 0.61-m by 0.010-m) thick soil plate with an additional 2-in (0.05-m) long by 90 degree bend at the top is located behind the post, 2 in (0.05 m) below grade. In these discussions of the development of traffic barriers for park roads and parkways, it should be kept

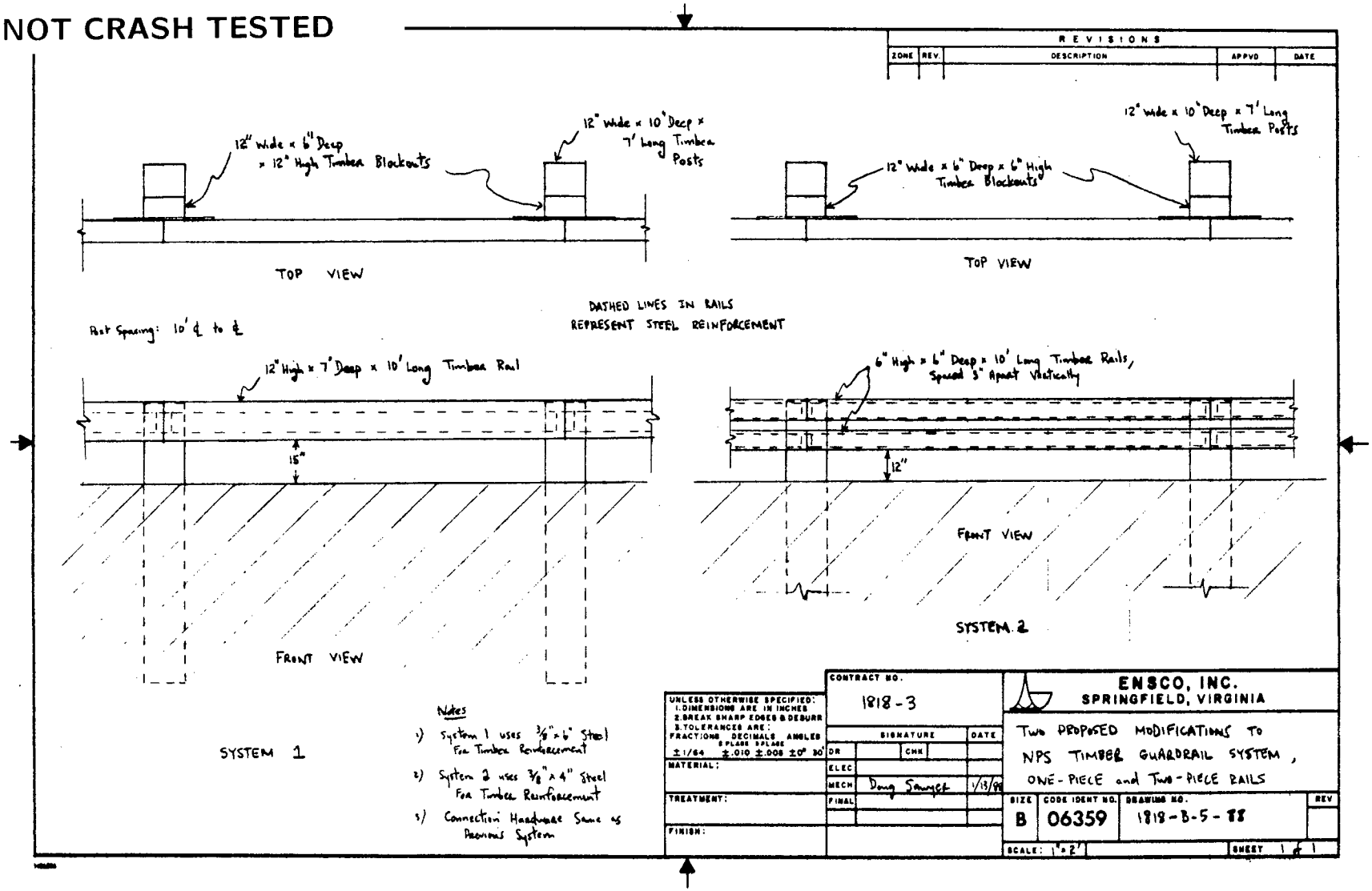

1 in = 0.03 m 1 ft = 0.30 m

Figure 4. Improved wooden guardrail designs.

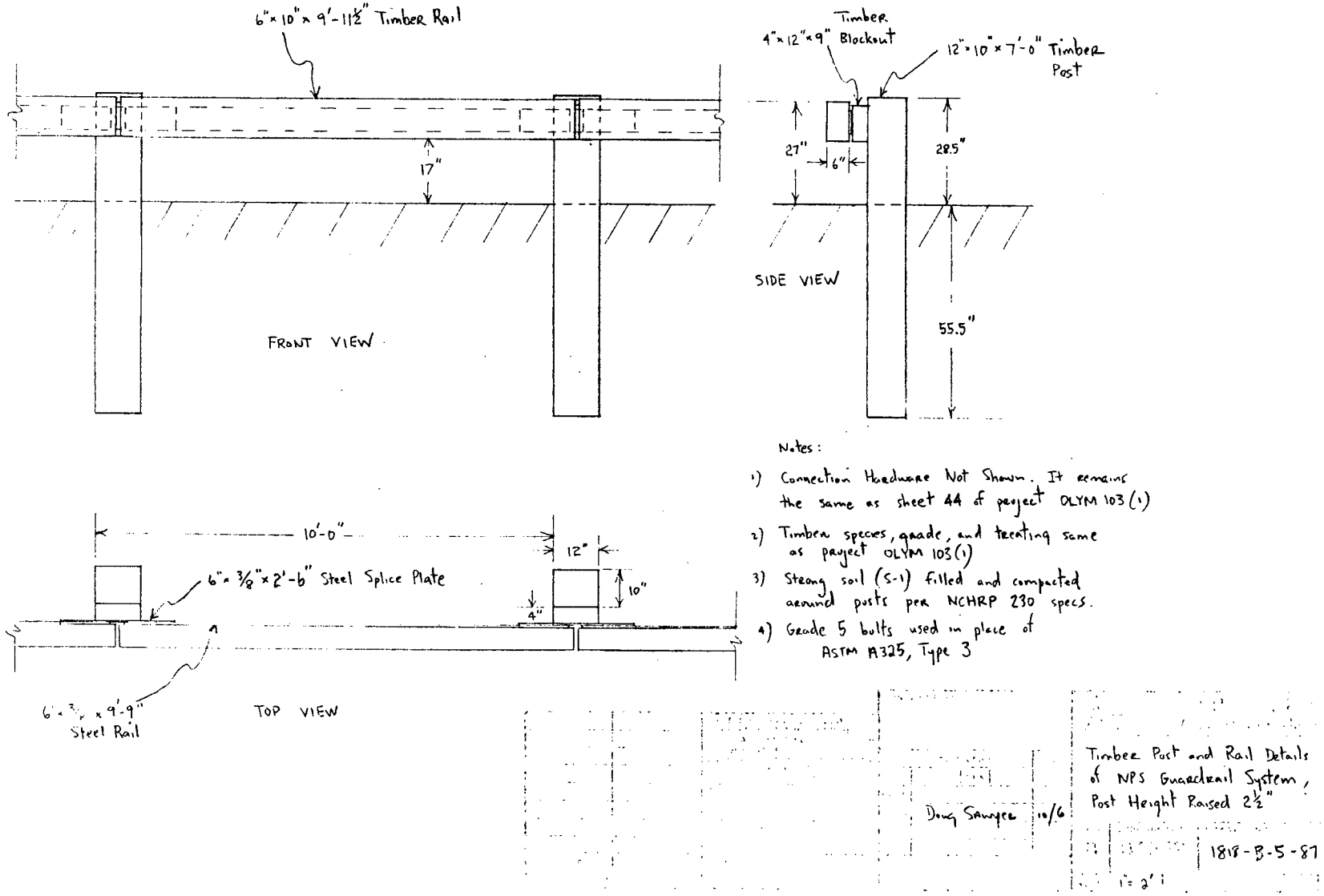

1 in = 0.03 m 1 ft = 0.30 m

Figure 4 (cont). Improved wooden guardrail designs.

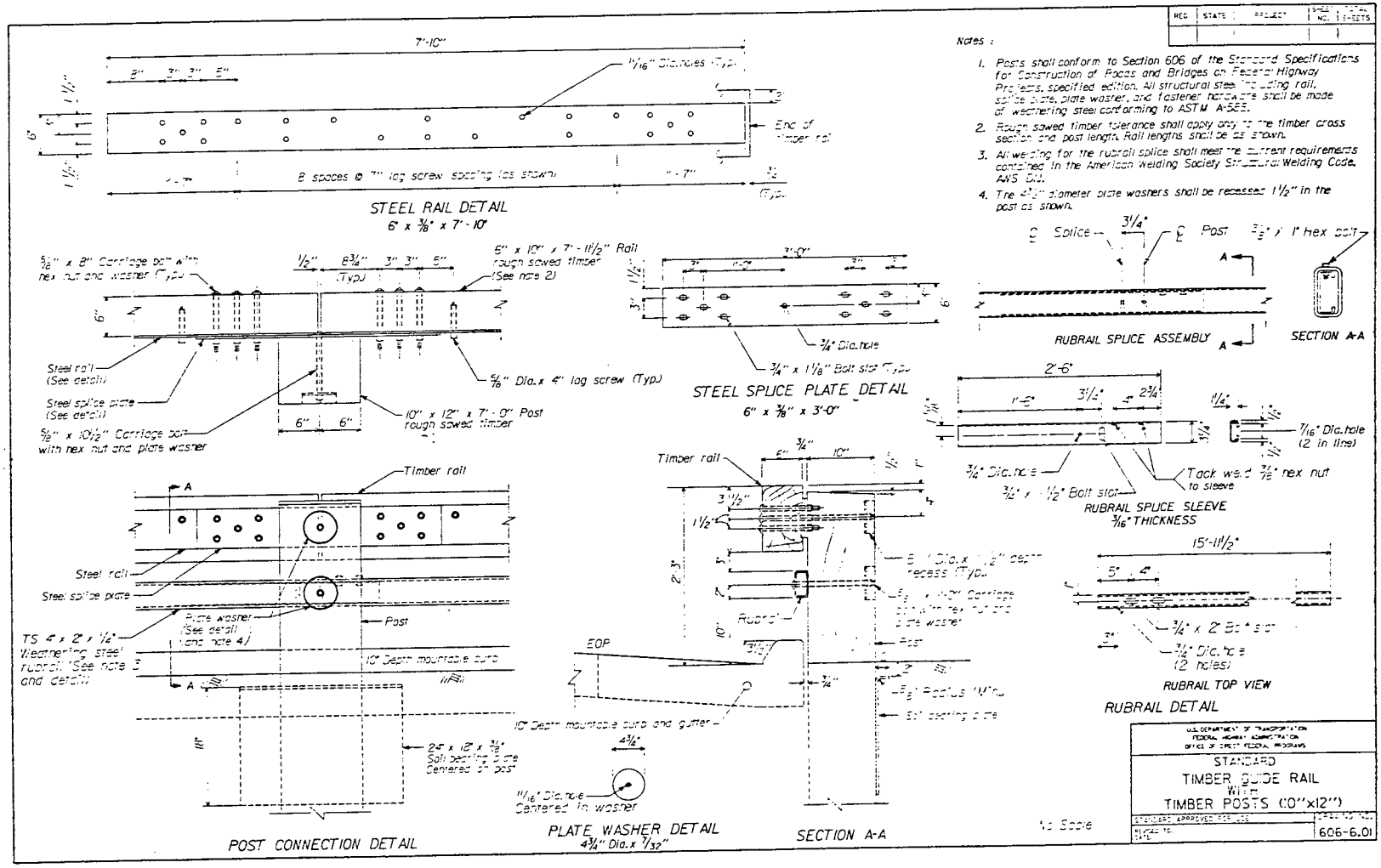

1 in = 0.03 m 1 ft = 0.30 m

Figure 5. High speed wooden guardrail design.

in mind that aesthetics is a primary design consideration. This greatly influenced the barrier selection and design process.

4. STONE MASONRY GUARDWALL SYSTEM

The stone masonry guardwall system is similar to that installed on the Skyline Drive within Shenandoah National Park. It consists of a rubble stone veneer applied to a precast concrete core. The stone material was a Maryland native mica schist. Three types of stone were used for the wall, as follows: ordinary rough for the face, sawed veneer for the one piece (full width) coping stones (at least 25 percent of length) and rubble building veneer for the remaining two-piece coping stones. The guardwall was built per FHWA specifications SHEN IA9 and SHEN 3BP. Espina Stone Company, the masonry contractor that built the Skyline Drive masonry guardwall, also built the guardwalls tested under this contract. The guardwall was 27 in (0.69 m) high, 24 in (0.61 m) wide, and 90 ft (27 m) long. The wall core height was 18 in (0.46 m). This section presents various design concepts for future application to this system. Figure 6 shows details of this system.

a. New Design of Stone Masonry Guardwall

As summarized in the full-scale test section, task E, the stone masonry guardwall was structurally inadequate under NCHRP 230 test 10 conditions. 15 ft (4.6 m) of coping stone was knocked 5 ft (1.53 m) behind the wall, 4 ft (1.22 m) of coping stone was angled back, and a one-piece coping stone was dislodged. Given that standard bumper heights for large sedans are 18 in (0.46 m) at the bumper center and the core height is 18 in (0.46 m) above ground level, the weakest point of the system is at the vertical impact point. The following recommendations are made to improve this design:

- Raise the core embedment depth 3 in (0.08 m) and reduce the coping thickness 3 in (0.08 m). Thus, the guardwall height remains at 27 in (0.69 m), however, the precast concrete core is contributing to the strength of the system.

- Use type S mortar instead of the present type N mortar. This will increase the mortar compressive strength from 750 lb/in^2 (5168 kPa) to 1200 lb/in^2 (8268 kPa), a 60 percent increase. The increase in cost is minimal.

- Improve the masonry to core top shear resistance by providing a 4-in wide by 4-in (0.10-m by 0.10-m) deep keyway in the center of the top of the precast core. Vertical dowels can also be used to strengthen the system, however these are not felt to be necessary.

A second test was conducted on the rough stone masonry guardwall system after modification of the system. The core was raised to

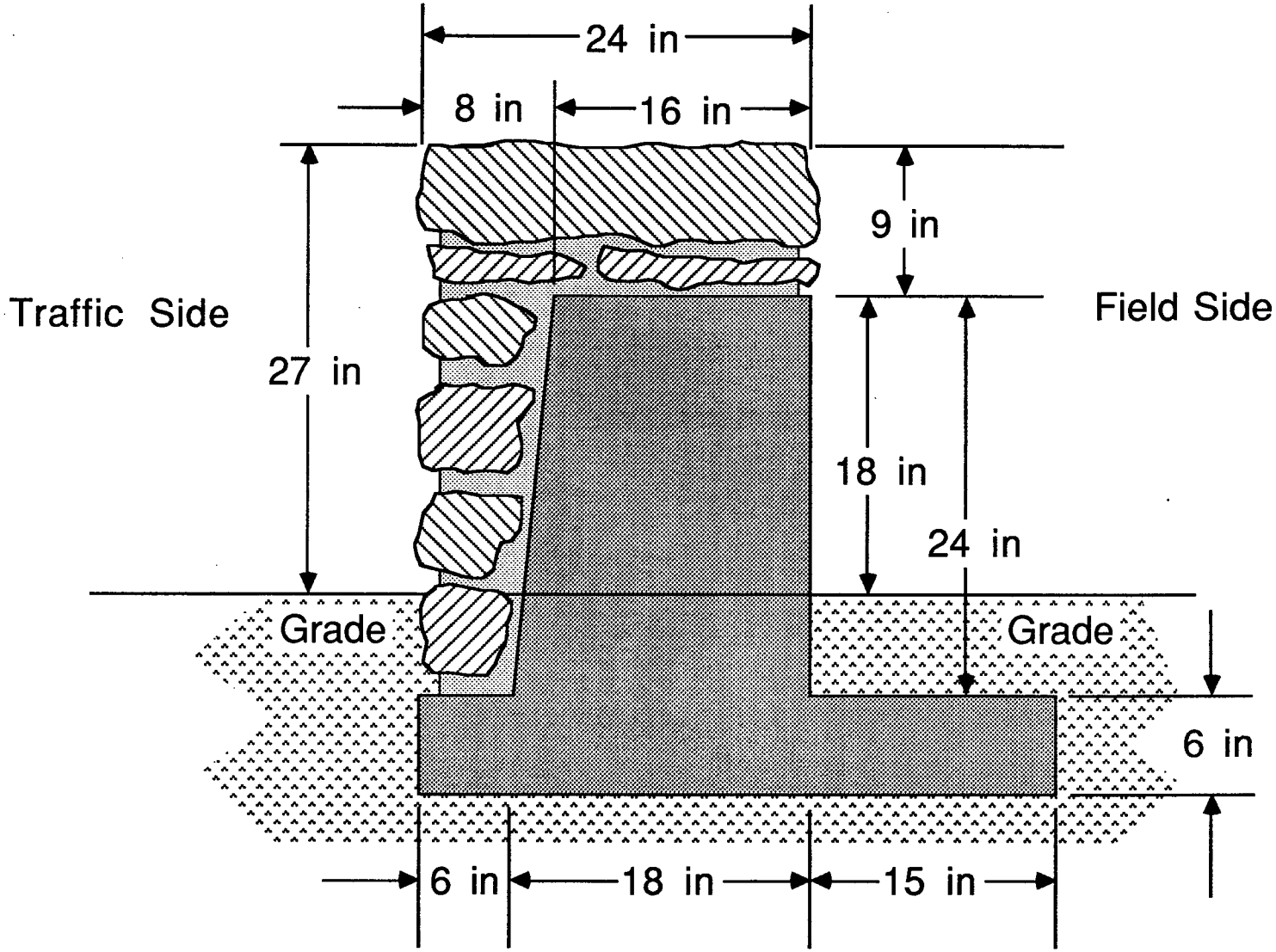

1 in = 0.03 m

Figure 6. Stone masonry guardwall system.

a 20 in (0.51 m) height while maintaining an overall wall height of 27 in (0.69 m). This retest met the evaluation criteria for test 10 of NCHRP 230.

b. Mountable Curb

The stone masonry guardwall intended for the Baltimore-Washington Parkway will have a 3.5-in (0.09-m) mountable curb located in front of the wall.

Two tests were conducted on a stone median barrier with a 3.5-in (0.09-m) mountable curb and gutter located in front of the wall (see task E, tests 7 and 12). From the roadway edge, 13 ft (4.0 m) of a 2 percent downslope led into the 2.5-ft (0.76-m) long, 3.5-in (0.09-m) high mountable curb and gutter. Between the curb and the face of the wall was 10.5 ft (3.2 m) of a 2 percent upslope.

The tests conducted were: NCHRP 230 test 10 (4500-lb (2043-kg) vehicle, 60 mi/h (26.8 m/s), 25 degrees) and test S13 (1800-lb (817-kg) vehicle, 60 mi/h (26.8 m/s), 20 degrees.)

During the tests, the vehicles rolled slightly while traversing the curb. The curb also caused the small car test vehicle (1800 lb (817 kg)) to turn slightly causing the impact to be upstream of the desired impact location. The trajectory of the large car test vehicle (4500 lb (2043 kg)) was not changed by the curb.

5. ARTIFICIAL STONE, PRECAST CONCRETE MEDIAN BARRIER

This barrier was designed to simulate a smooth stone median barrier while lowering overall cost by lowering the cost of installation and eliminating the required masonry work. Figure 7 shows details of this system.

The barrier was 27 in (0.69 m) high with a 1-in (0.03-m) capstone overhang. The barrier was 100 ft (30 m) long, consisting of ten 10-ft (3.0-m) sections. The sections were cast in Ladysmith, Virginia and shipped to the contractor's Delaware test facility. The sections were placed on a bed of packed crusher run 6 in (0.15 m) thick. Two of the sections featured the original square keyway design while the rest had the current round pin and socket design. The sections were shaped like a T with a base that was 3.5 ft (1.07 m) wide and 1 ft (0.30 m) thick. The stone-like part of the barrier rose 27 in (0.69 m) above the base.

Two tests were conducted on this barrier (see task E, tests 7 and 12). Overall, this system performed very well. Visually, the system was a very good representation of a smooth stone wall. The system successfully met the NCHRP 230 evaluation criteria for tests 10 and S13.

However, installation of this barrier was somewhat difficult. Each section was cast upside-down and the true bottom of the

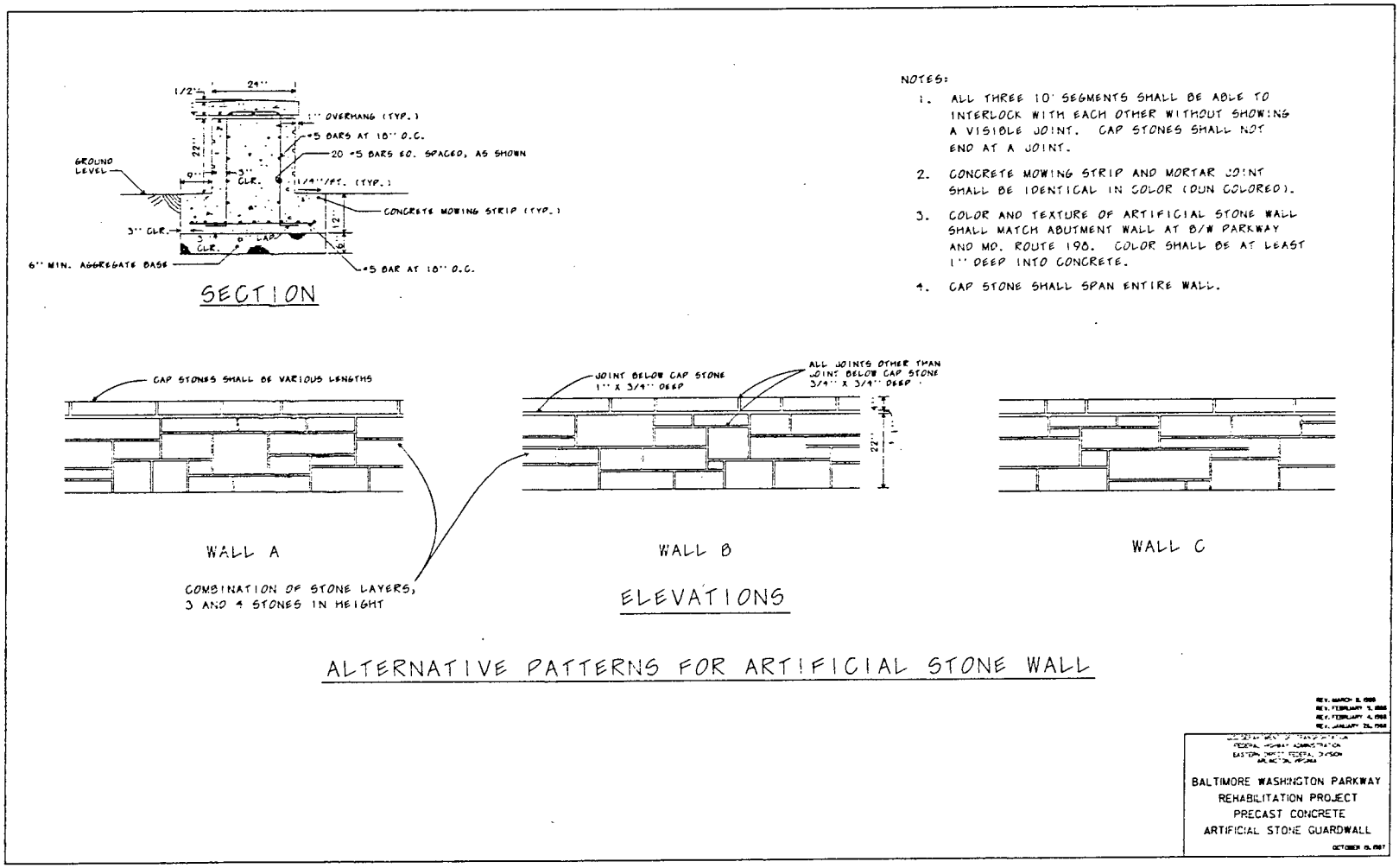

1 in = 0.03 m 1 ft = 0.30 m

Figure 7. Artificial, cast-concrete, smooth stone median barrier design.

section was screed to form a flat surface. However, this surface was not uniformly flat. To place and level the sections required repeated grading and smoothing of the crusher run base. A solution to this problem is to tighten the manufacturing quality control specifications for the production of this barrier.

6. LOG GUARDRAIL SYSTEM

The log guardrail system shown in figure 8 is considered structurally adequate. However, this system has the same limitations as the timber system discussed previously. The splice plate/rail connections should be improved to reduce the inherent slack in the system. Furthermore, the contact surface of the log rail presents problems unless it is adequately blocked-out. The round log shape will promote either vaulting or nosing of impacting vehicles. In the case of nosing vehicles, which is more likely, snagging becomes a problem. Therefore, an adequate blockout is required. Two tapered cast steel blockouts were designed and submitted for review to the FHWA. One blockout had straight tapered edges while the second blockout had curved tapered edges. Figure 8 is a drawing of the curved edge blockout. The FHWA plans to crash test this log guardrail under a future contract.

7. REMOVEABLE GUARDRAIL SYSTEM DESIGNS

a. Introduction

The Glacier National Park uses a removeable guardrail on some of their roads. The current design is in need of upgrading. A new conceptual design was proposed by WFLHD, and reviewed by the contractor. This system used 8-in by 8-in (0.20-m by 0.20-m) wood rails and built-up steel posts. The posts were attached to the deck with a single bolt anchor setup. Analysis of this design found several deficiencies, including, insufficient rail splice strength to carry rail tensile loads, marginal rail strength, and a weak connection of the post to the deck detail.

Several rail concepts were developed by the contractor for FHWA review. Desirable features from those concepts were selected by WFLHD. Based on this review, a set of designs were generated for connecting the post to the deck, the basic shape of the rail, and the connection of the rail to the post. A set of engineering drawings depicting each concept was generated.

The drawings were delivered to the FHWA. Appendix C includes reductions of these drawings. Two combinations of the systems are presented in an artist type sketch, shown in figures 9 and 10. These illustrate the flexibility of these combinations of posts and rails.

The first is based on the slide base mount for anchoring the post to the ground and the pin link rail to post attachment. The other depicts the angle rail system with the insert splice with

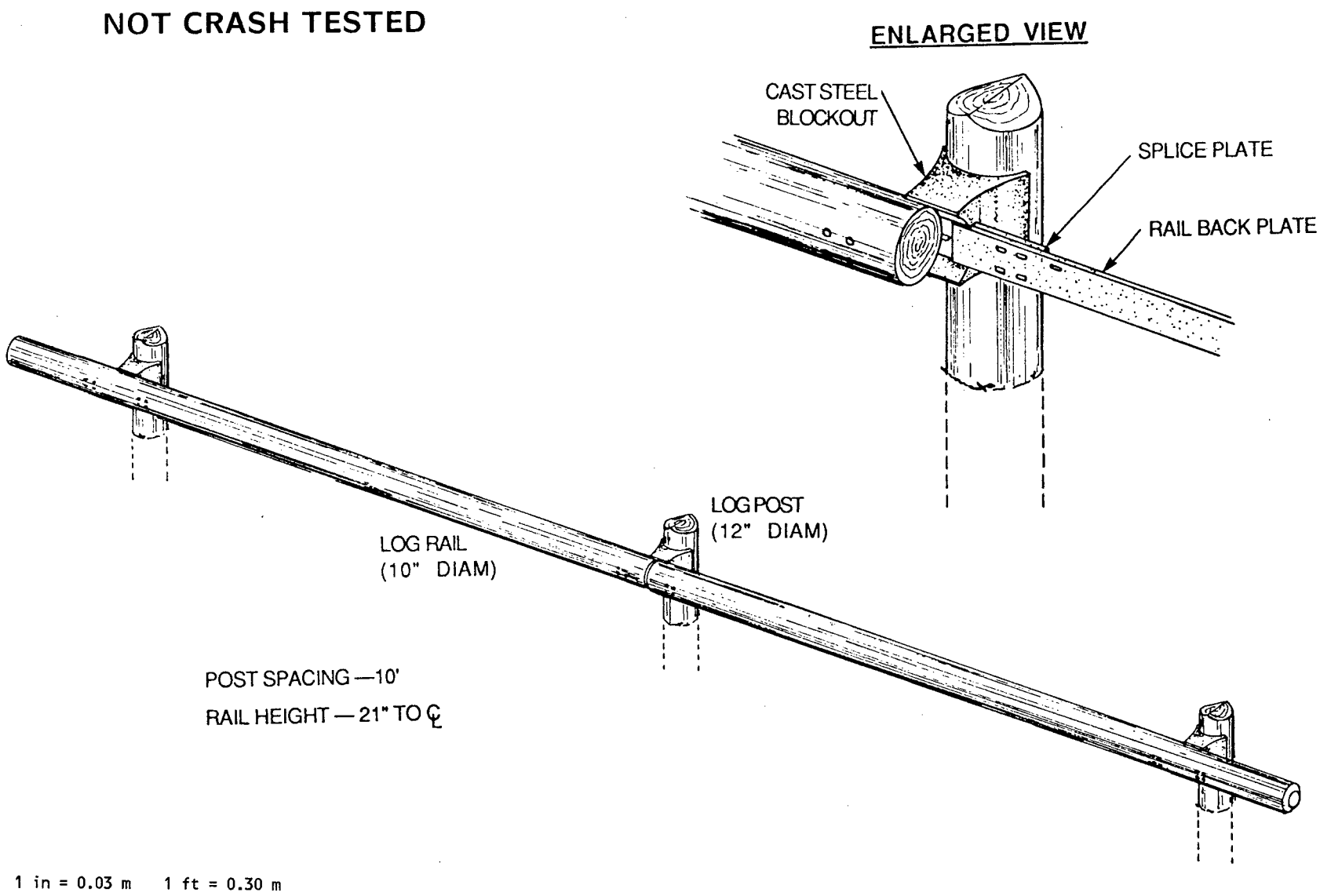

Figure 8. Curved edge blockout design.

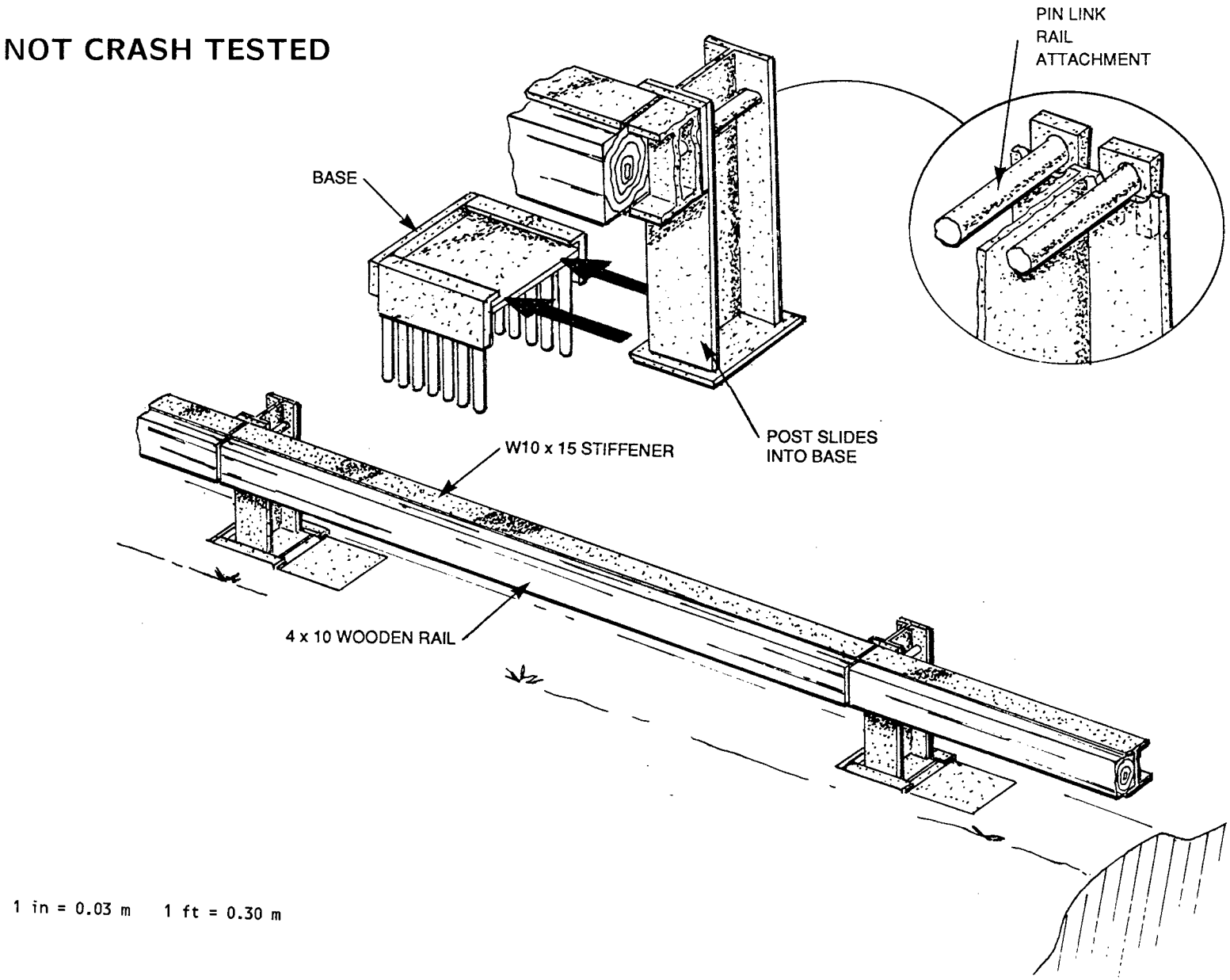

Figure 9. Removeable guardrail system design, concept 1.

NOT CRASH TESTED

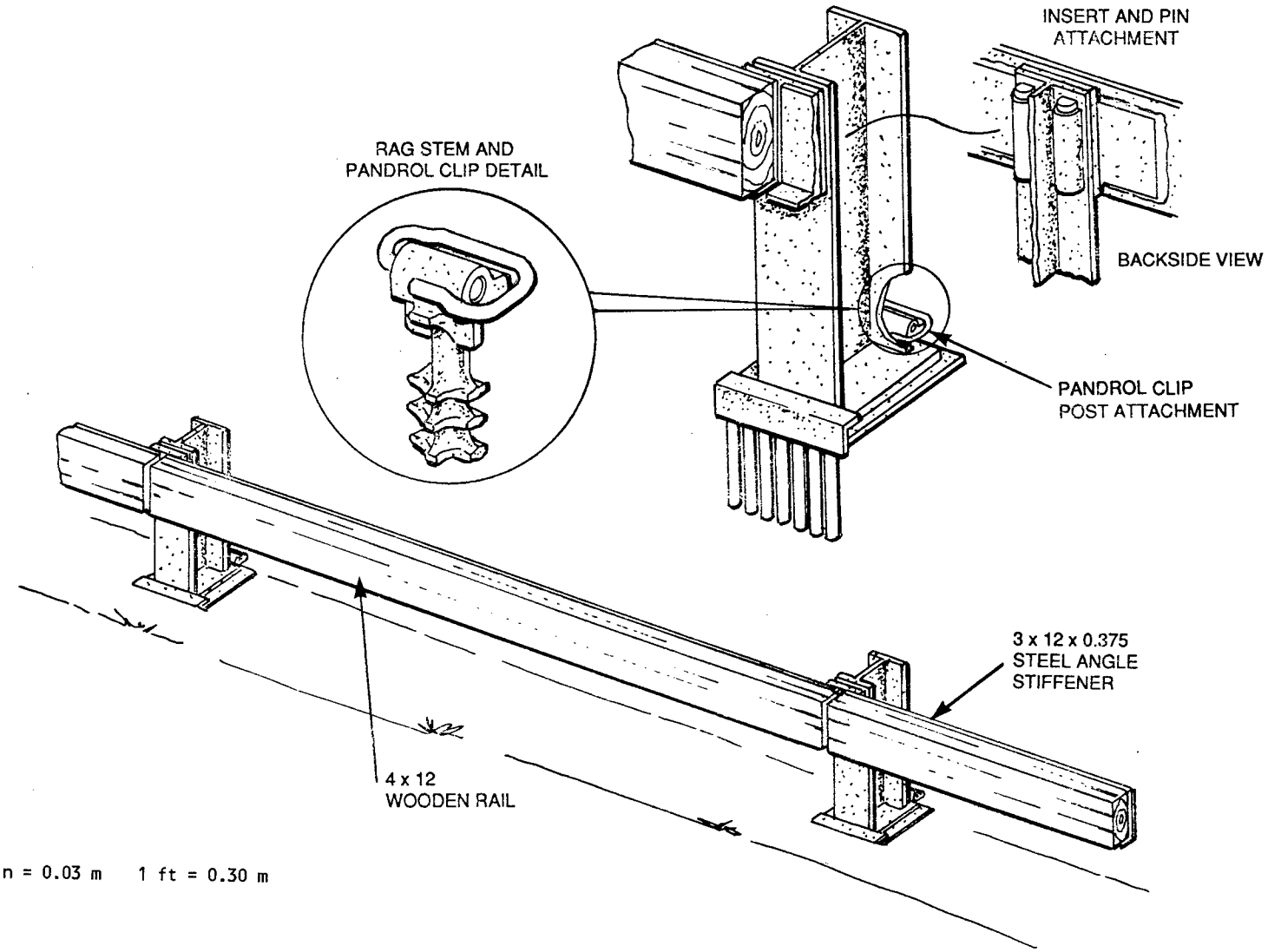

1 in = 0.03 m 1 ft = 0.30 m

Figure 10. Removeable guardrail system design, concept 2.

pin rail attachment and the Pandrol post mount. These two sketches show two combinations of the rail to post and post to ground attachments. Almost any combination of these attachments can be used with both the rail concepts shown in the illustrations and detailed in the drawing package.

b. Description of Various Concepts

This section presents brief discussions of each of the concepts presented for the removable system. This section is broken down into three areas, 1) rail options, 2) post/post to ground attachment options, and 3) rail to post connection options.

(1). <u>Rail Options</u>

The two rail designs discussed in this section were shown in the two illustrations. The two rail types are:

1. 4-in by 10-in (0.10-m by 0.25-m) wooden rail element with W10x15 backup beam.

2. 4-in by 12-in (0.10-m by 0.30-m) wooden rail element with 3-in by 12-in by 0.375-in (0.08-m by 0.30-m by 0.010-m) built-up angle backup beam.

(a). W-Beam Design

The W-beam rail design consists of a 10-in by 4-in (0.25-m by 0.10-m) wooden rail element nested inside a steel backup beam. The backup rail is constructed using a W10x15 stiffener rail. The top of the beam is mounted 27 in (0.69 m) above the pavement. This design is blocked-out about 3 in (0.08 m) due to the nature of the beam geometry and the attachment to the post.

(b). Angle Design

The angle rail design features a 12-in by 4-in (0.30-m by 0.10-m) wooden rail element and a 3-in by 12-in by 0.375-in (0.08-m by 0.30-m by 0.010-m) angle back up stiffener. It is mounted at 27 in (0.69 m), measured from the top of the wooden rail to the pavement. The extra 2 in (0.05 m) of rail are added to make up for the lack of a blockout. This depth effectively reduces the spacing between the bottom of the rail and the pavement, thus lowering the possibility of wheel snag.

(2). <u>Post to Ground Attachment Options</u>

Each of the seven concepts are discussed in the following paragraphs.

Table 10 is a list of the post/post to ground attachment options along with their associated drawing number. The drawing numbers which end in () contain more than one page. All the drawings are reproduced in appendix C.

Table 10. Post to ground attachment concept drawing numbers.

Drawing Number	Concept Number	Title
1818-B-15-()	1	Slide Base
1818-B-16	2	One Side Latch
1818-B-17-()	3	Lug Lock
1818-B-18-()	4	Pandrol Clip
1818-B-19	5	Dual Bolt Clip
1818-B-20	6	Key Lock
1818-B-25	7	Rotate Lock

(a). Slide Base

The slide base post uses a W-beam post welded to a 1-in (0.03-m) base plate. The post and its base plate is slid into a base unit which is comprised of two angles cast into the concrete footing. The base unit is about 4 in (0.10 m) longer than the post base plate to allow for the post to be moved side to side for rail alignment.

(b). One Side Latch

This design uses the same post as the slide base concept but has a different base unit design. The angle is removed from the back side and replaced with a vertical plate. Two wedge shaped pins are driven into the vertical plate to hold the post in position. This nonsymmetrical design allows for strong support in the direction of loading from an errant vehicle, while maintaining the easy removal design feature.

(c). Lug Lock

The lug lock post attachment uses a set of four lugs which engage a set of matching holes in the base plate. The lugs have a 2-in (0.05-m) head diameter and a 1-in (0.03-m) neck diameter. To install the post, the lugs are dropped into a set of large openings and then slid into position. Locking is accomplished with a 0.5-in (0.013-m) keeper bolt. This design is expensive to build because of the lugs and will not allow for a great amount of adjustment for varying rail lengths and anchor misalignments, but will be very easy to use.

(d). Pandrol Clip

In this design, the post is the same as the slip base design. The base unit is comprised of an angle on the load side to control the moment and a Pandrol clip on the backside to lock the post in place. Pandrol clips are used in great numbers in fastening railroad rails to concrete ties. They have a good clamping load (about 2200 lb (9790 N) each), are installed with a sledge hammer and can be reused many times. The devices are also fairly inexpensive, with the clip costing about $1.75 and the rag anchor about $4 to $5.

(e). Dual Bolt Clip

In this design the post base plate is actually anchored on the back side with two Coil bolts. These bolts are specially designed for use in concrete and can be installed and removed many times. The front side of the base unit uses the angle to maintain the strength to redirect crashing vehicles.

(f). Key Lock

The key lock design uses a wedged Z-shaped key to lock the post base plate to the base unit. This design incorporates easy installation and a positive lock to maintain the post in position during a crash. The key is driven in place and removed with a hammer.

(g). Rotate Lock

The rotate lock post uses a base plate which locks into the base unit when it is twisted 90 degrees. After dropping the post into the base unit, the post is then rotated back the 90 degrees to lock it into place. This design has the feature that no hardware is needed to anchor the post to the base while maintaining a full containment of the post during a crash. The disadvantage might be that it will be hard to clean after the winter season.

(3). <u>Rail to Post Connection Options</u>

Table 11 lists the rail to post attachment options along with their associated drawing number. All the drawings are reproduced in appendix C. Each of the four concepts are discussed in the following paragraphs.

Table 11. Rail to post connection concept drawing numbers.

Drawing Number	Concept Number	Title
1818-B-21-1	1	Pin Link
1818-B-21-2	1	Pin Link with W10x15 backup
1818-B-21-3	1	Pin Link with angle backup
1818-B-22	2	Vertical Pin
1818-B-23	3	Insert and Pin
1818-B-24	4	Slip Joint

(a). Pin Link

The pin link rail to post attachment uses a 1.25-in (0.03-m) diameter pin to attach each end of the rail to a post. The pin is slid into holes in the post flanges and locked in place on the back side with a wedge. The wedge is installed with a hammer. On the front side of the post, a 0.5-in (0.013-m) thick plate is welded to carry the tensile load in the rail from one panel to

the next. The pins are welded to the rail stiffener beam in such a way to carry the load. This concept was depicted in figure 9.

(b). Vertical Pin

This concept works best with the W-beam stiffener, but could be adapted to the angle backup. Two shelf angles are welded to the front face of the post with a spacing compatible with the 10-in (0.25-m) W-beam. The web is removed over the last 6 in (0.15 m) of the beam and a set of holes are installed to permit the use of a vertical pin to lock the rail element to the post.

(c). Insert and Pin

This design utilizes an egg-shaped steel bracket welded to the back of the stiffener beam. This bracket is then slipped into a rectangular hole in the post flange. A tapered pin is driven into the bracket to lock the rail to the post. A 0.5-in (0.013-m) face plate is welded to the front of the post to carry the loads in the rail through the post. This concept was illustrated in figure 10.

(d). Slip Joint

In this design, collars are welded to each end of the rail element. The collars are large enough to slip over the top of the post and rest on a shelf welded to the post. The collars are welded to the rail with one end at the top side and the other end at the bottom side. This allows the elements to be all the same and allows them to be stacked on the post. A keeper bolt is installed on the top collar to lock them to the post.

TASK D - TEST PROGRAM DEVELOPMENT

The initial test matrix containing 10 tests was set forth in the contract. Five of these tests were conducted. Based upon the results of these tests and the output from the survey, analysis and design tasks, modifications were proposed and developed in connection with and with guidance from the FHWA. The actual matrix of tests conducted is given in table 12.

Table 9. Test matrix.

Test Number	Vehicle	Speed (mi/h)	Angle (degrees)	Appurtenance
1818-5-1-87	1982 Honda Civic	61.9	20.4	Blocked-out, steel-backed wood guardrail, 8-in by 10-in by 5-ft, 8-in posts
1818-5-2-87	1978 Ford Thunderbird	60.2	25.2	Blocked-out, steel-backed wood guardrail, 8-in by 10-in by 7-ft posts
1818-5-3-87	1981 Honda Civic	61.2	20.2	Rough Stone Masonry Guardwall, 18-in core height
1818-5-4-87	1978 Ford LTD II	60.8	25.0	Rough Stone Masonry Guardwall, 18-in core height
1818-5-88	1981 Plymouth Gran Fury	61.0	24.0	Rough Stone Masonry Guardwall, 20-in core height
1818-5-6-87	1978 Ford LTD II	62.4	24.4	Blocked-out, steel-backed wood guardrail, 10-in by 12-in by 7-ft posts
1818-7-88	1982 Honda Civic	61.3	21.0	Artificial Stone, Precast Concrete Median Barrier
1818-8-88	1982 Honda Civic	63.5	20.0	Blocked-out, steel-backed wood guardrail, 10-in by 12-in by 7-ft posts
1818-9-89	1981 Plymouth Gran Fury	60.4	25.0	32-in BW Parkway, Smooth Stone Masonry Bridge Rail
1818-12-88	1981 Plymouth Gran Fury	61.5	25.0	Artificial, Cast-concrete, Smooth-Stone Median Barrier
1818-14-88	1981 Plymouth Gran Fury	51.1	25.0	Low-speed, steel-backed wood guardrail, 10-in by 12-in by 7-ft posts

Note: Due to a change in the test numbers during the course of the contract, tests 10, 11 and 13 were not conducted.

1 mi/h = 0.45 m/s 1 in = 0.03 m 1 ft = 0.30 m

TASK E - FULL-SCALE TESTS

Eleven tests were conducted under this contract. Each test is discussed in detail in this section. Photographs, drawings, data plots and descriptions of the test setup and results are presented for each test.

Due to a change in the test numbers during the course of the contract, tests 10, 11 and 13 were not conducted. The test numbers consist of the job number (first four digits), the test sequence number (center digits), and the year the test was conducted (last two digits).

1. TEST 1818-5-1-87

a. Test Device

The test device was a blocked-out, steel-backed wood guardrail designed by the FHWA WFLHD. This system is similar the EFLHD system installed on the George Washington Memorial Parkway. The guardrail was 90 ft (27 m) long. The posts were 8 in by 10 in by 5 ft, 8 in (0.20 m by 0.25 m by 1.73 m) set at 10-ft (3.0-m) spacing with 6-in by 10-in by 10-ft (0.15-m by 0.25-m by 3.0-m) rails. The rails were backed with 6-in by 0.375-in (0.15-m by 0.010-m) steel plates. These plates were attached to the rail with nine 0.625-in (0.016-m) lag screws. The ends of the rails were through-bolted to a 2-ft, 6-in long by 6-in by 0.375-in (0.76-m by 0.15-m by 0.010-m) splice plate with four 0.75-in (0.019-m) bolts. The splice plate was bolted to the post with one 0.625-in (0.016-m) bolt. A 4-in by 9-in by 10-in (0.10-m by 0.23-m by 0.25-m) blockout was mounted between the post and the rail. A 4-in by 4-in (0.10-m by 0.10-m) plate washer was used on the back of the splice plate bolt. The rail height was 27 in (0.69 m) and the posts were embedded 42 in (1.07 m).

Figure 11 shows the test site and test device. Figure 12 shows a detailed drawing of the test device. Figure 13 shows pretest photographs of the guardrail system.

b. Test Vehicle

The test vehicle was a 1982 Honda Civic. The target inertial vehicle weight was 1800 ± 50 lb (817 ± 23 kg). The inertial weight of the vehicle was 1815 lb (824 kg). The target gross vehicle weight was 1950 ± 50 lb (885 ± 23 kg). The gross weight of the vehicle was 1998 lb (907 kg).

X-, y- and z-axis accelerometers were mounted in the car along with roll and yaw rate gyros. One fully-instrumented dummy was placed in the vehicle in the driver seat, unrestrained. The dummy instrumentation consisted of x-, y- and z-axis accelerometers in the head and chest and load cells in the legs. Pretest photographs of the test vehicle are shown in figure 14.

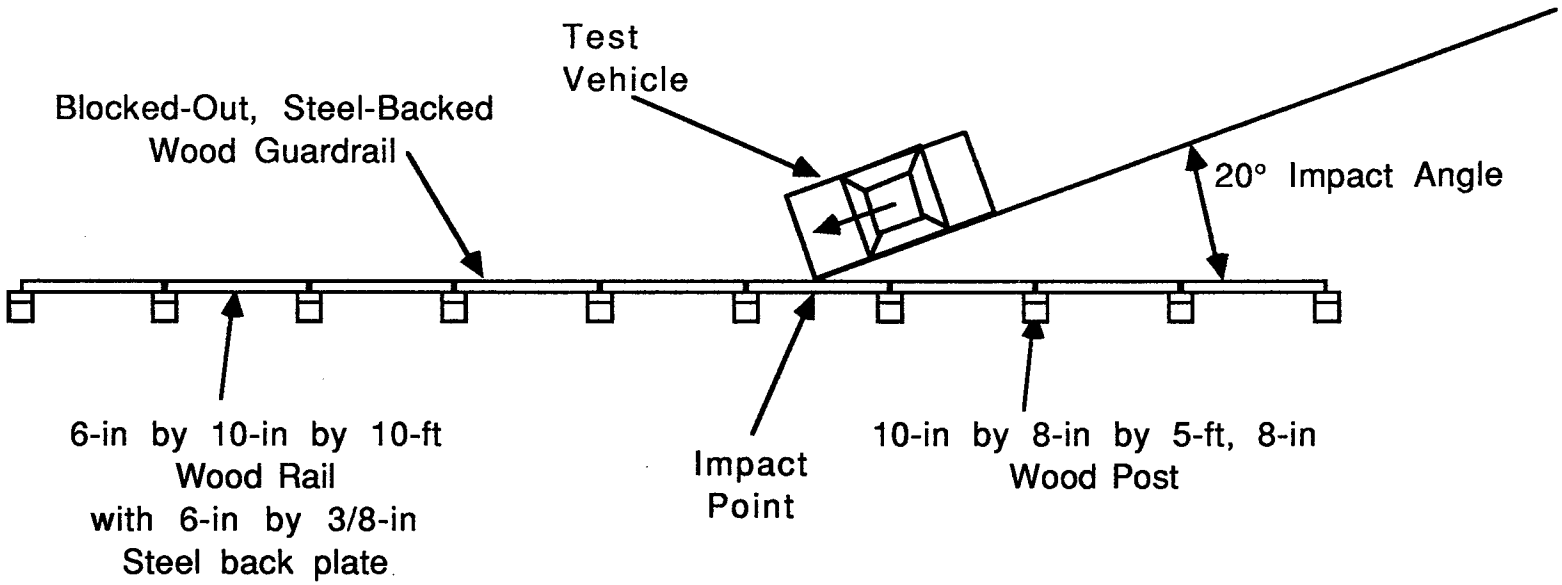

Design also features:
4-in by 9-in by 10-in blockout between post and splice plate
6-in by 3-ft by 3/8-in splice plate
Single bolt splice plate attachment
4 bolt per rail-end attachment to splice plate

1 in = 0.03 m 1 ft = 0.30 m

Figure 11. Test site layout, test 1818-5-1-87.

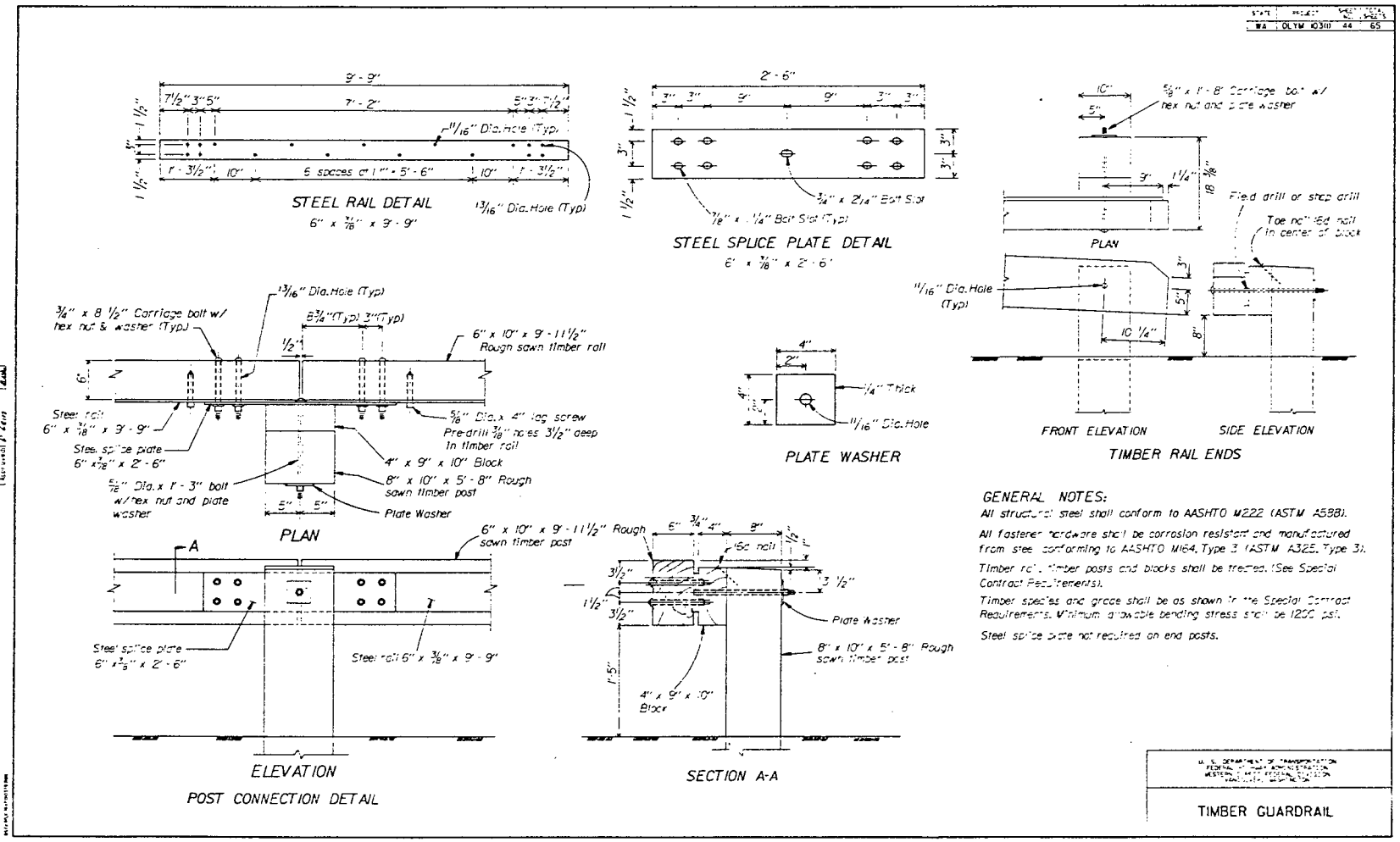

1 in = 0.03 m 1 ft = 0.30 m

Figure 12. Test device, test 1818-5-1-87.

Figure 13. Pretest photographs of guardrail system, test 1818-5-1-87.

Figure 14. Pretest photographs of test vehicle, test 1818-5-1-87.

c. Impact Description

Review of the high-speed films, fifth wheel and speed trap data indicated that the test vehicle impacted at 61.9 mi/h (27.7 m/s) and 20.4 degrees. This review also indicated that the vehicle impacted at the desired point.

During the crush of the vehicle left front fender, the first downstream post (post 5) pushed back, allowing the vehicle tire to ride under the rail. The car continued downstream into post 6, which did not deflect. The post and connecting rail section blew out due to the force of this impact. The rail ends disintegrated and the post completely rotated out of the ground. The impact with the post caused most of the damage to the left front corner of the vehicle. The impact with the post caused the vehicle to yaw while continuing downstream. The vehicle remained in contact with the rail for 15 ft (4.6 m). The vehicle came to rest centered on post 7, at a 95 degree angle to the rail.

Tire scrub was found on the underside of the rail and on post 5. The rail sections at posts 4 through 8 were laterally displaced and debris was thrown up to 60 ft (18 m) behind the rail system.

Inside the vehicle, it was observed that the dummy's head collided with the A-pillar and windshield header. The upper portion of the driver side door was wedged outward from the impact of the dummy. The dummy received a large gash in the face from contacting the breaking windshield. The dummy came to rest with its head between the seats.

A summary of the test conditions and results is given in figure 15. Data analysis was performed and the vehicle x-axis and y-axis, 100 Hz acceleration traces are shown in figure 16.

d. Dummy Data Analysis

Due to a break in the data cable during the test, no dummy data was obtained.

e. Vehicle Damage

Damage occurred mainly to the left front fender, grill and bumper. The driver side door was wedged outward and the windshield and driver side window glass were shattered. Posttest photographs of the vehicle are shown in figure 17.

f. Guardrail Damage

Due to the severe impact that occurred at post 6, the splice plate and all connection hardware were bent or sheared. The fifth rail and the sixth post and blockout were severely damaged. Posttest photographs of the guardrail are shown in figure 18.

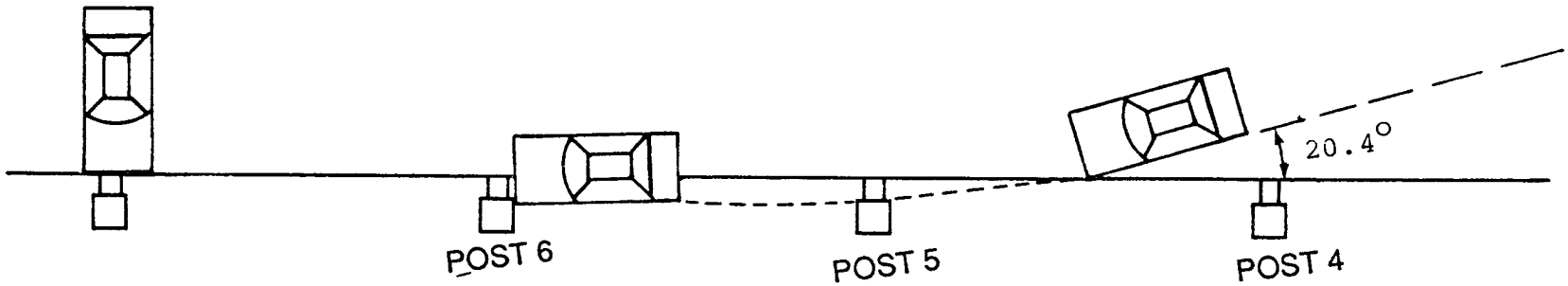

Date: 8 July 1987
Weather: Sunny 90° F

Test Vehicle: 1982 Honda Civic

Device Configuration: Blocked-out, steel-backed wood guardrail, 90 ft long, 27 in high. 8-in by 10-in by 5-ft, 8-in posts. 6-in by 10-in by 10-ft rails. 4-in by 9-in by 10-in blockouts. 3-ft splice plates, 4 bolt splice to rail attachment, single bolt rail attachment to post.

1. Vehicle Weight:

	Test Inertial	Gross
Planned:	1800 ± 50	1950 ± 50
Actual:	1815	1998

2. Number of Occupants: One

3. Occupant Model: Anthropomorphic Dummy, 50th percentile, male

4. Occupant Location: Driver Seat, Unrestrained

5. Impact:

	Speed	Angle (a)	Location
Planned:	60.0 mi/h	20°	Midspan, posts 4 and 5
Actual:	61.9 mi/h	20.4°	Midspan, posts 4 and 5

6. Redirection Angle: 0 degrees

7. Redirection Speed: not calculated*

8. Total Speed Change: not calculated*

9. Total Momentum Change: not calculated*

10. Vehicle Damage Index: (SAE J224a) 11LFEW2

11. NCHRP 230 Test Number: S13

12. Impact Severity:

$\frac{m(V \sin a)^2}{2}$ 28.2 kip-ft (Spec: 23 to 29 kip-ft)

13. Vehicle Analysis:

	Observed	Design/ Limit Value
NCHRP 230:		
Longitudinal:		
Delta-V at 2 ft:	-25.7 ft/s	30/40 ft/s
Ridedown Acceleration:	-20.5 g's	15/20 g's
Delta-V at 1.67 ft (actual):	-22.0 ft/s	20/30 ft/s
Ridedown Acceleration:	-20.5 g's	15/20 g's
Lateral:		
Delta-V at 1 ft:	-15.6 ft/s	20/30 ft/s
Ridedown Acceleration:	-9.1 g's	15/20 g's
Delta-V at 0.83 ft (actual):	-18.6 ft/s	20/30 ft/s
Ridedown Acceleration:	-9.1 g's	15/20 g's
TRC 191:		
Peak 50 ms acceleration:		
Longitudinal:	-17.2 g's	
Lateral:	-5.7 g's	

14. Test Results Conclusion: Vehicle was not smoothly redirected by the rail. The vehicle underrode the guardrail and snagged severly on post 6. Test was not successful.

* Vehicle did not leave rail and was stopped 25 ft downstream of the impact point.

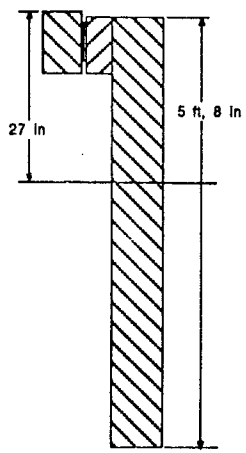

1 mi/h = 0.45 m/s
1 mi = 1609 m
1 in = 0.03 m
1 kip = 4450 N
1 ft = 0.30 m
1 kip-ft = 1355 N·m
1 lb = 0.45 kg
1 ft/s = 0.30 m/s
1 'g' = 32.2 ft/s^2 = 9.8 m/s^2
1 lb-sec = 4.45 N-s

Figure 15. Test summary, test 1818-5-1-87.

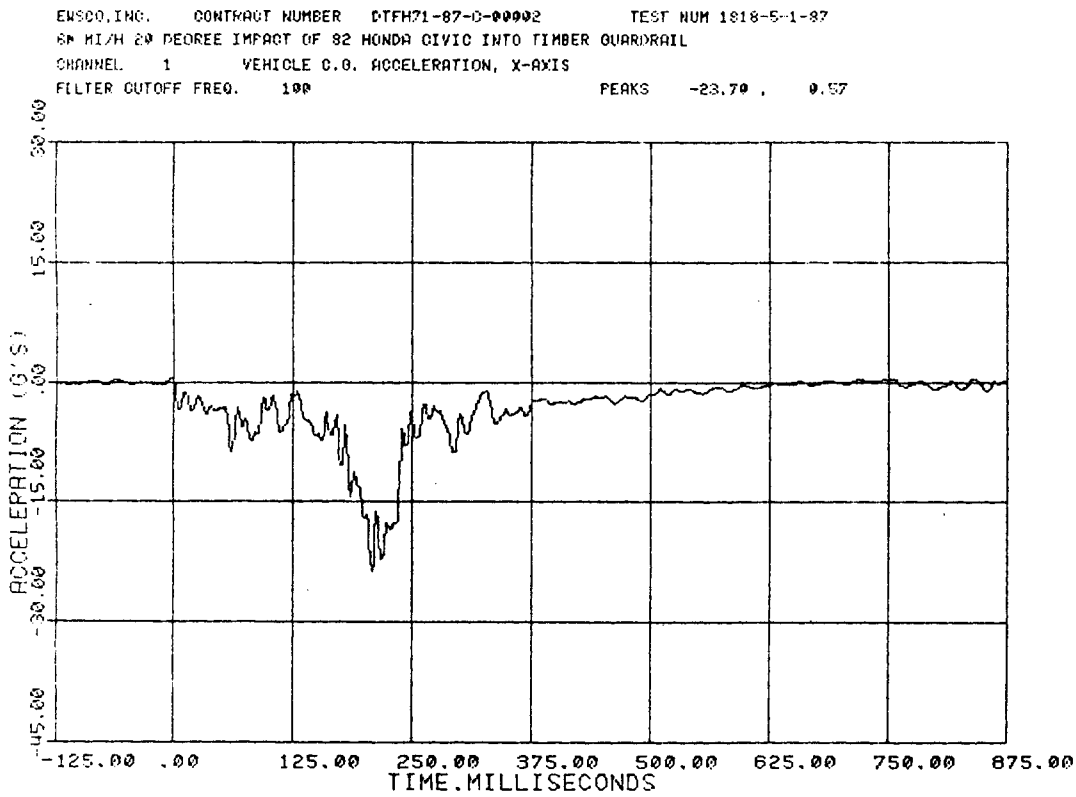

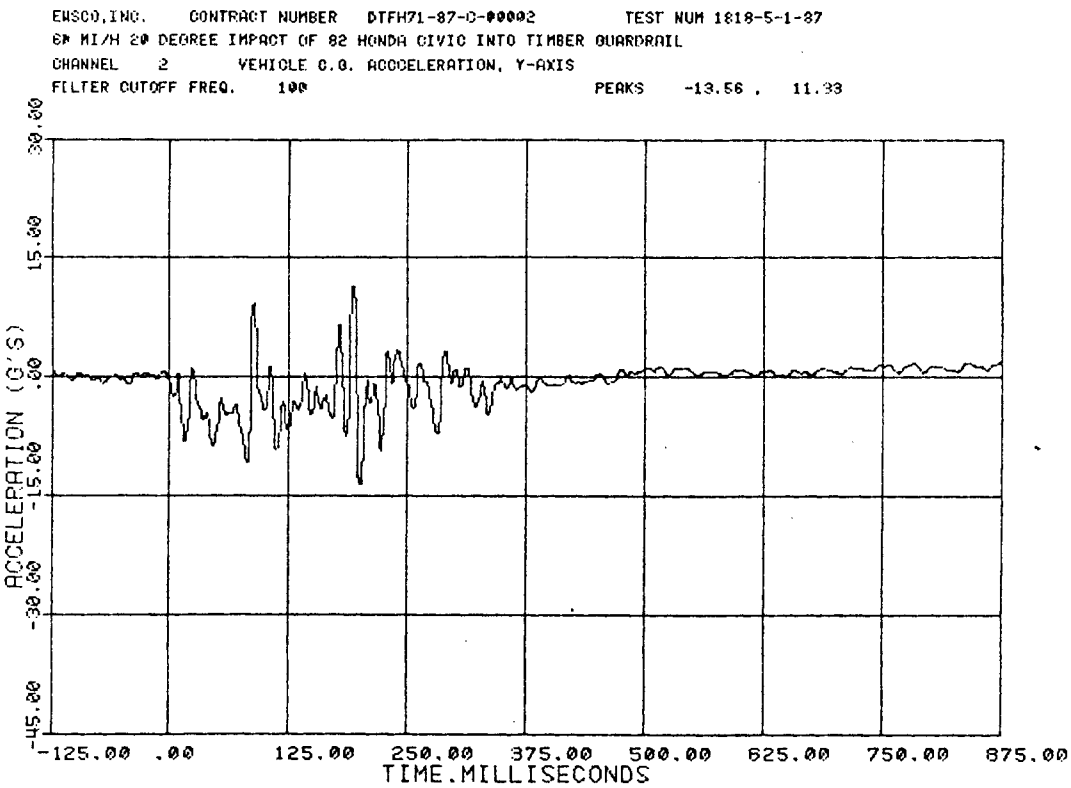

Figure 16. Vehicle acceleration, test 1818-5-1-87.

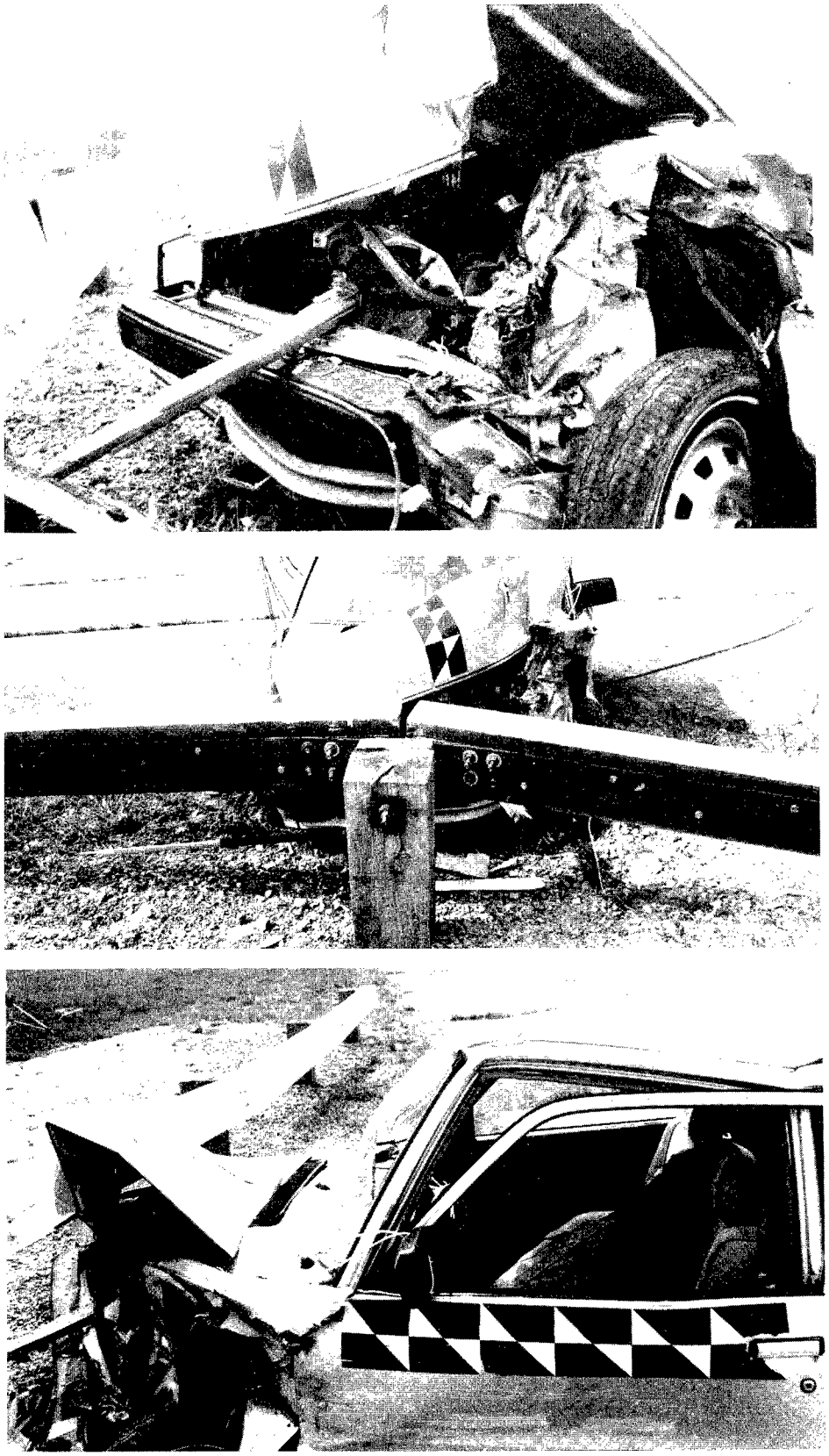

Figure 17. Posttest photographs of test vehicle, test 1818-5-1-87.

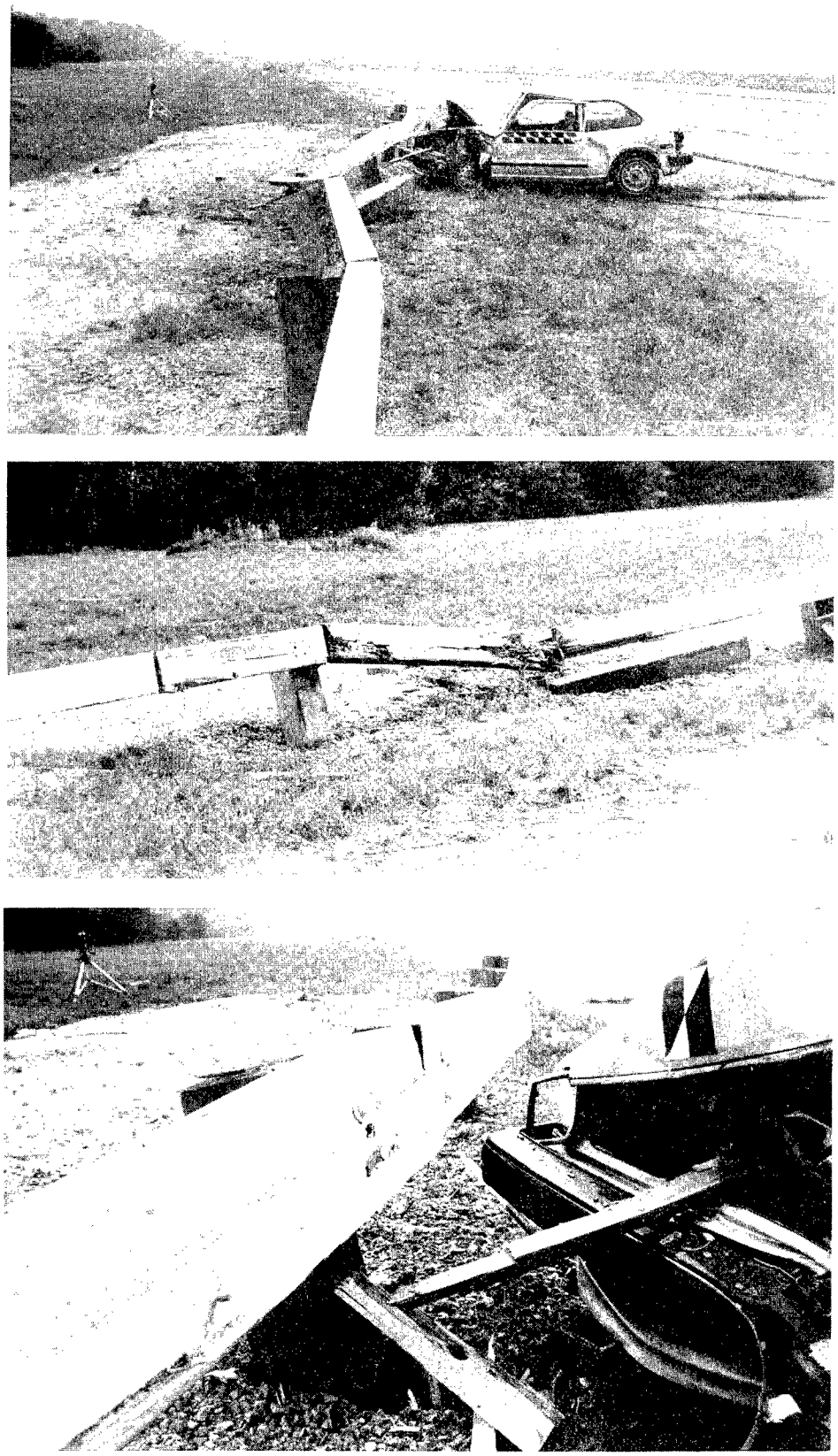

Figure 18. Posttest photographs of guardrail system, test 1818-5-1-87.

2. TEST 1818-5-2-87

a. Test Device

The test device was a blocked-out, steel-backed wood guardrail designed by the FHWA WFLHD. The rail system is similar to the system tested in test 1818-5-1-87. The posts were changed to 8 in by 10 in by 7 ft (0.20 m by 0.25 m by 2.1 m). The post length was the only detail that was changed from test 1818-5-1-87. The guardrail was 90 ft (27 m) long. The rail height was 27 in (0.70 m) and the posts were embedded 58 in (1.47 m).

Figure 19 shows the test site and test device. Figure 20 shows a detailed drawing of the test device. Figure 21 shows pretest photographs of the guardrail system.

b. Test Vehicle

The test vehicle was a 1978 Ford Thunderbird. The target inertial vehicle weight was 4500 ± 200 lb (2043 ± 91 kg). The inertial weight of the vehicle was 4313 lb (1958 kg). The target gross vehicle weight was 4500 ± 300 lb (2043 ± 136 kg). The gross weight of the vehicle was 4670 lb (2120 kg).

X-, y- and z-axis accelerometers were mounted in the car along with roll and yaw rate gyros. Two fully-instrumented dummies were placed in the vehicle in the driver seat, unrestrained and in the passenger seat, restrained. The dummy instrumentation consisted of x-, y- and z-axis accelerometers in the head and chest and load cells in the legs. Pretest photographs of the test vehicle are shown in figure 22.

c. Impact Description

Review of the high-speed films, fifth wheel and speed trap data indicated that the test vehicle impacted at 60.6 mi/h (27.1 m/s) and 25.2 degrees. This review also indicated that the vehicle impacted at the desired point.

During the crush of the vehicle left front fender, the first downstream post (post 5) broke, allowing the vehicle tire to ride under the rail. The car continued downstream into post 6, which also broke. Prior to impacting post 6, all four of the 0.75-in (0.019-m) bolts sheared off at the upstream splice plate of rail 5. Upon impacting post 6, the post bolt pulled out of the post. Thus, rails 5 and 6 were free to move on the upstream end. They rotated 180 degrees and came to rest parallel with rails 7 and 8. The vehicle continued downstream and impacted post 7. The impact with the post caused the vehicle to yaw while continuing downstream. The vehicle remained in contact with the rail for 15 ft (4.6 m). The vehicle came to rest centered on post 7, at a 25 degree angle to the rail. Impacts with posts 6 and 7 caused most of the damage to the left front corner of the vehicle.

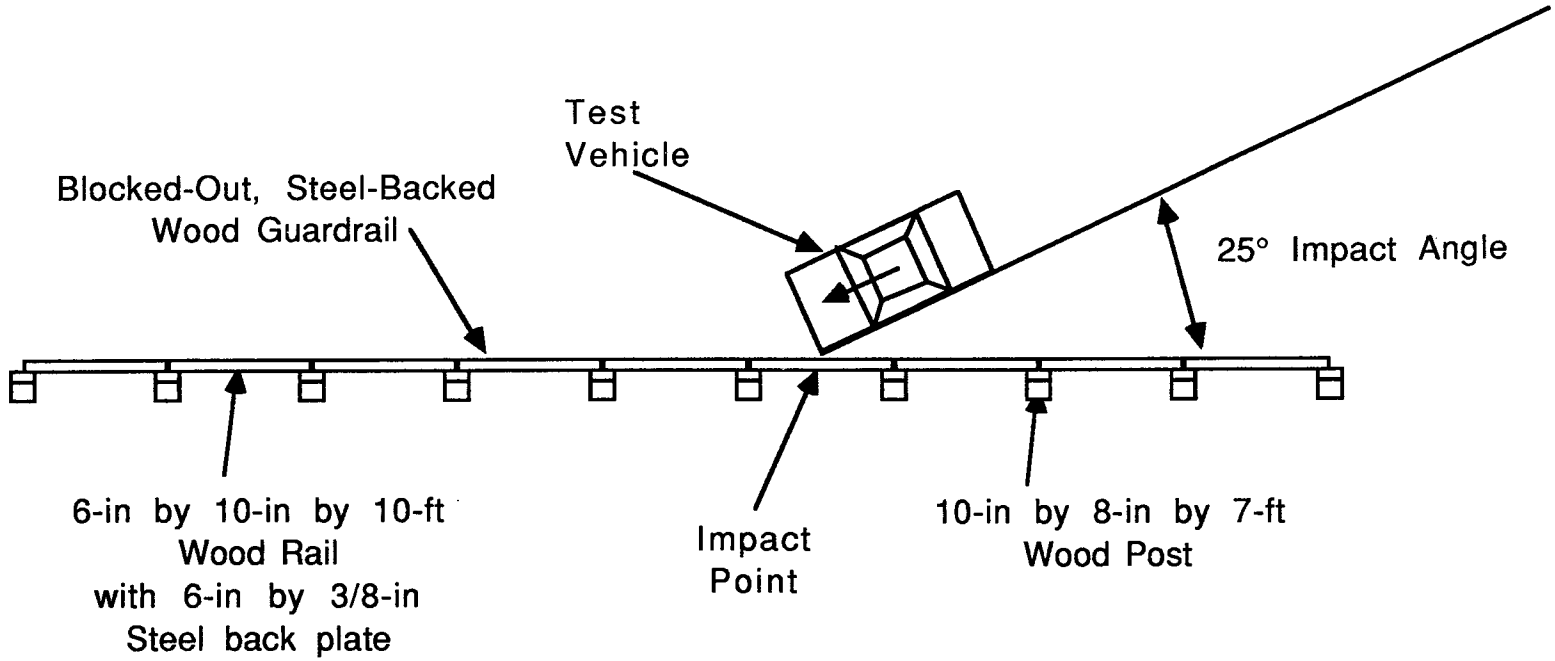

Design also features:
4-in by 9-in by 10-in blockout between post and splice plate
6-in by 3-ft by 3/8-in splice plate
Single bolt splice plate attachment
4 bolt per rail-end attachment to splice plate

1 in = 0.03 m 1 ft = 0.30 m

Figure 19. Test site layout, test 1818-5-2-87.

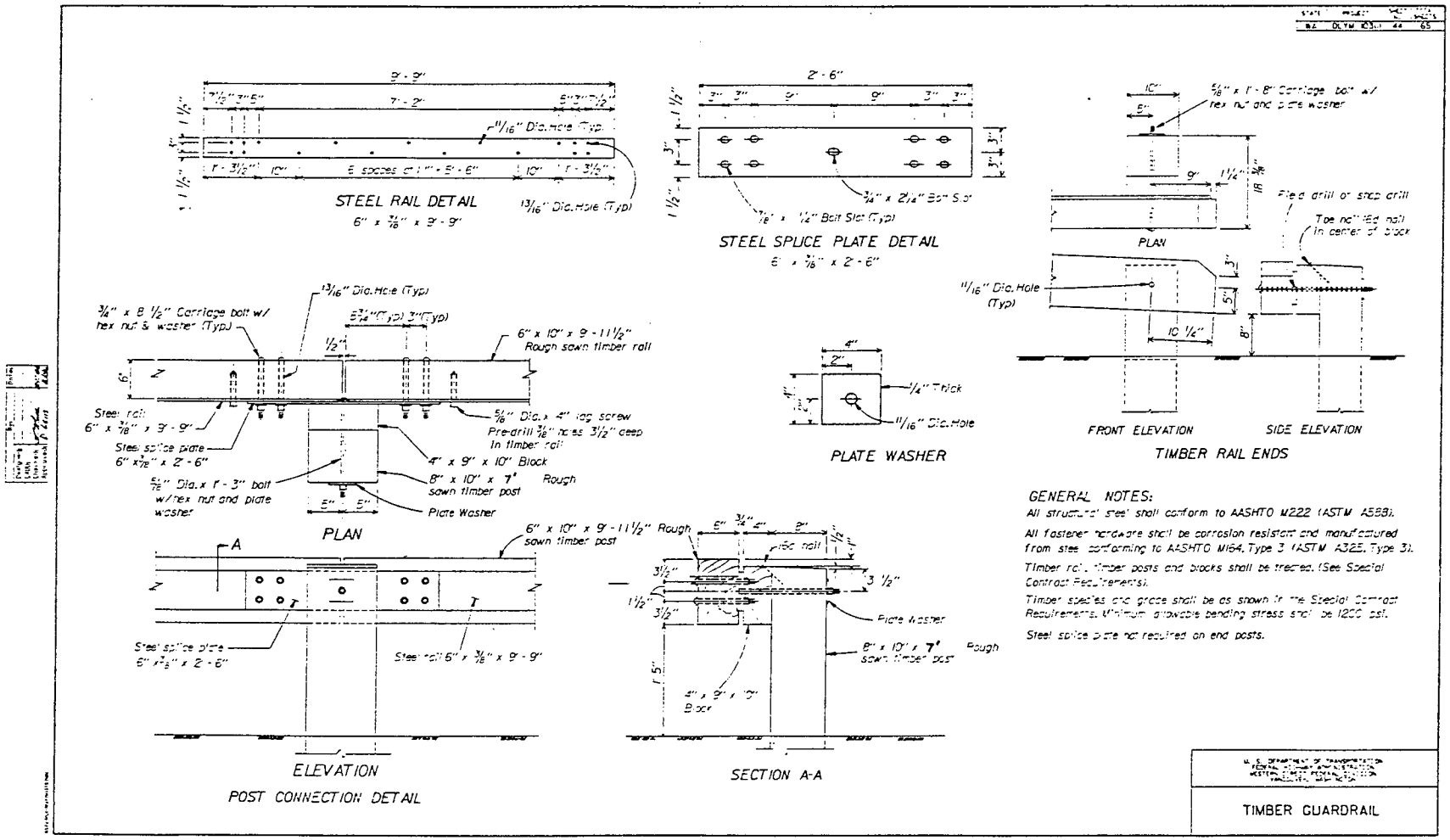

1 in = 0.03 m 1 ft = 0.30 m

Figure 20. Test device, test 1818-5-2-87.

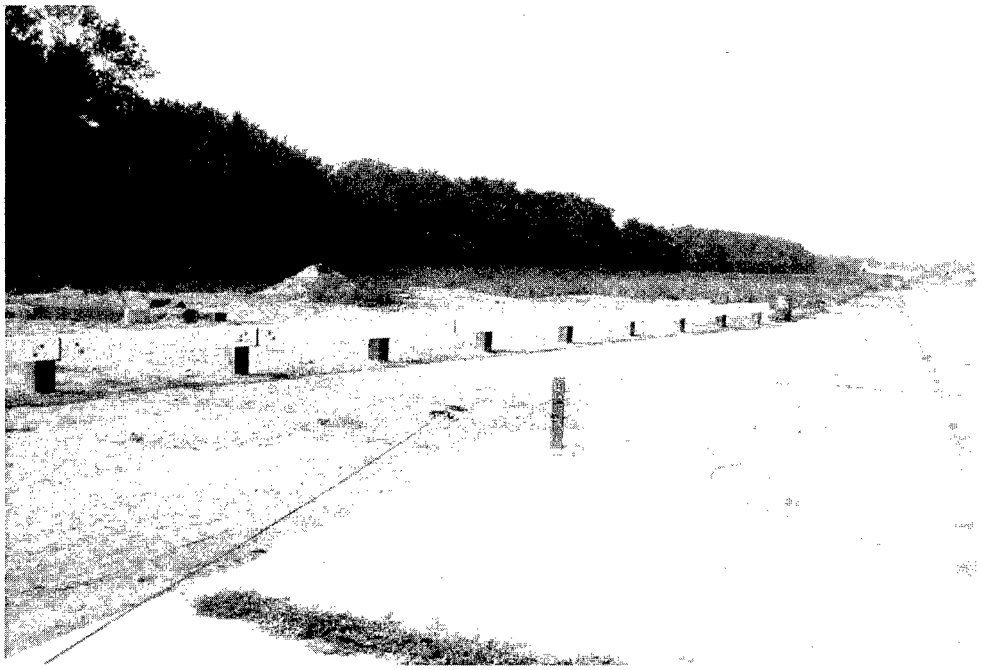

Figure 21. Pretest photographs of guardrail system, test 1818-5-2-87.

Figure 22. Pretest photographs of test vehicle, test 1818-5-2-87.

Tire scrub was found on the underside of rails 4 and 5 and on posts 5 and 6.

Inside the vehicle, it was observed that the dummy's head impacted the upper left corner of the windshield. The upper portion of the driver side door was wedged outward from the impact of the dummy and the side window was shattered

A summary of the test conditions and results is given in figure 23. Data analysis was performed and the vehicle x-axis and y-axis, 100 Hz acceleration traces are shown in figure 24.

d. Dummy Data Analysis

Dummy data analysis was performed. The dummy data was digitized at 8000 Hz and processed to compute the required parameters. Table 13 lists the dummy head, chest and femur parameters.

Table 13. Dummy parameters, test 1818-5-2-87.

	Driver	Passenger
Head		
HIC	543	61
Start time	0.152500	0.122125
End time	0.168375	0.226625
Time duration	0.015875	0.104500
Chest		
CSI	n/a	71
0.003 s Chest Acceleration	24.6	14.8
Time	0.157875	0.425125
Femur		
Right Load	560	127
Left Load	760	320

e. Vehicle Damage

Damage occurred mainly to the left front fender, grill and bumper. Both left tires and the right front tire were flat after the impact. The front left wheel rim was damaged from post snag. The driver side door was wedged outward and the windshield and driver side window glass were shattered. Posttest photographs of the vehicle are shown in figure 25.

f. Guardrail Damage

Due to the failure of the posts and the connection hardware at post 5, a significant amount of damage occurred. Posts 5, 6 and

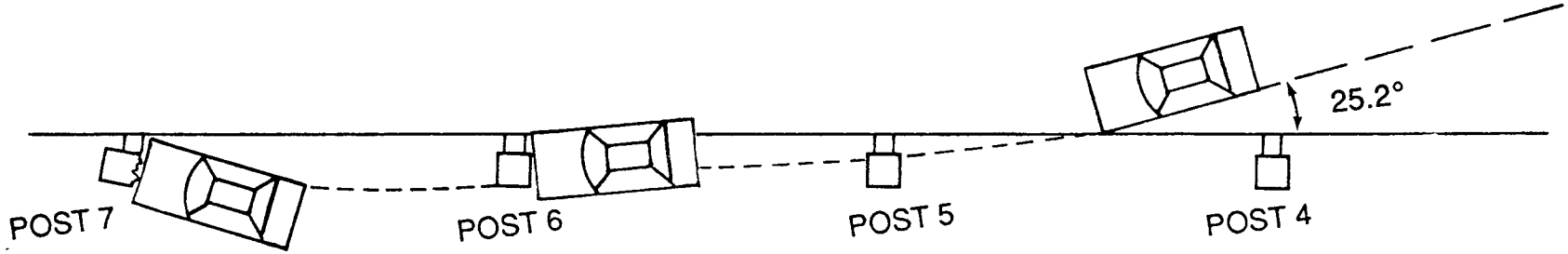

Date: 16 September 1987
Weather: Partly Sunny 85° F

Test Vehicle: 1978 Ford Thunderbird

Device Configuration: Blocked-out, steel-backed wood guardrail, 90 ft long, 27 in high. 8-in by 10-in by 7-ft posts. 6-in by 10-in by 10-ft rails. 4-in by 9-in by 10-in blockouts. 2-ft, 6-in splice plates, 4 bolt splice to rail attachment, single bolt rail attachment to post.

1. Vehicle Weight:

	Test Inertial	Gross
Planned:	4500 ± 200	4500 ± 300
Actual:	4313	4670

2. Number of Occupants: Two

3. Occupant Model: Anthropomorphic Dummy, 50th percentile, male

4. Occupant Location: Driver Seat, Unrestrained
Passenger Seat, Restrained

5. Impact:

	Speed	Angle (a)	Location
Planned:	60.0 mi/h	25°	Midspan, posts 4 and 5
Actual:	60.2 mi/h	25.2°	Midspan, posts 4 and 5

6. Redirection Angle: 0 degrees

7. Redirection Speed: not calculated*

8. Total Speed Change: not calculated*

9. Total Momentum Change: not calculated*

10. Vehicle Damage Index: (SAE J224a) 11FYEW2

11. NCHRP 230 Test Number: 10

12. Impact Severity:

$\frac{m(V \sin a)^2}{2}$ 94.7 kip-ft (Spec: 88 to 114 kip-ft)

13. Vehicle Analysis:

	Observed	Design/ Limit Value
NCHRP 230:		
Longitudinal:		
Delta-V at 2 ft:	-23.0 ft/s	30/40 ft/s
Ridedown Acceleration:	-11.3 g's	15/20 g's
Driver:		
Delta-V at 1.75 ft (actual):	-21.7 ft/s	20/30 ft/s
Ridedown Acceleration:	-11.3 g's	15/20 g's
Passenger:		
Delta-V at 1.50 ft (actual):	-21.3 ft/s	20/30 ft/s
Ridedown Acceleration:	-11.3 g's	15/20 g's
Lateral:		
Delta-V at 1 ft:	-12.2 ft/s	20/30 ft/s
Ridedown Acceleration:	-7.3 g's	15/20 g's
Delta-V at 0.83 ft (driver and passenger actual):	-18.6 ft/s	20/30 ft/s
Ridedown Acceleration:	-9.1 g's	15/20 g's
TRC 191:		
Peak 50 ms acceleration:		
Longitudinal:	-9.2 g's	
Lateral:	-14.7 g's	

14. Test Results Conclusion: Vehicle was not smoothly redirected by the rail. The vehicle underrode the guardrail. The guardrail failed at post 6. Vehicle squarely impacted post 7. Test was not successful.

* Vehicle did not leave rail and was stopped 25 ft downstream of the impact pointy

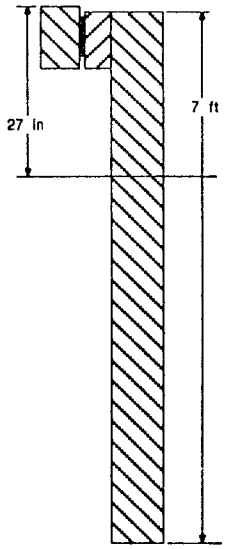

1 mi/h = 0.45 m/s
1 mi = 1609 m
1 in = 0.03 m
1 kip = 4450 N
1 ft = 0.30 m
1 kip-ft = 1355 N-m
1 lb = 0.45 kg
1 ft/s = 0.30 m/s
1 'g' = 32.2 ft/s^2 = 9.8 m/s^2
1 lb-sec = 4.45 N-s

Figure 23. Test summary, test 1818-5-2-87.

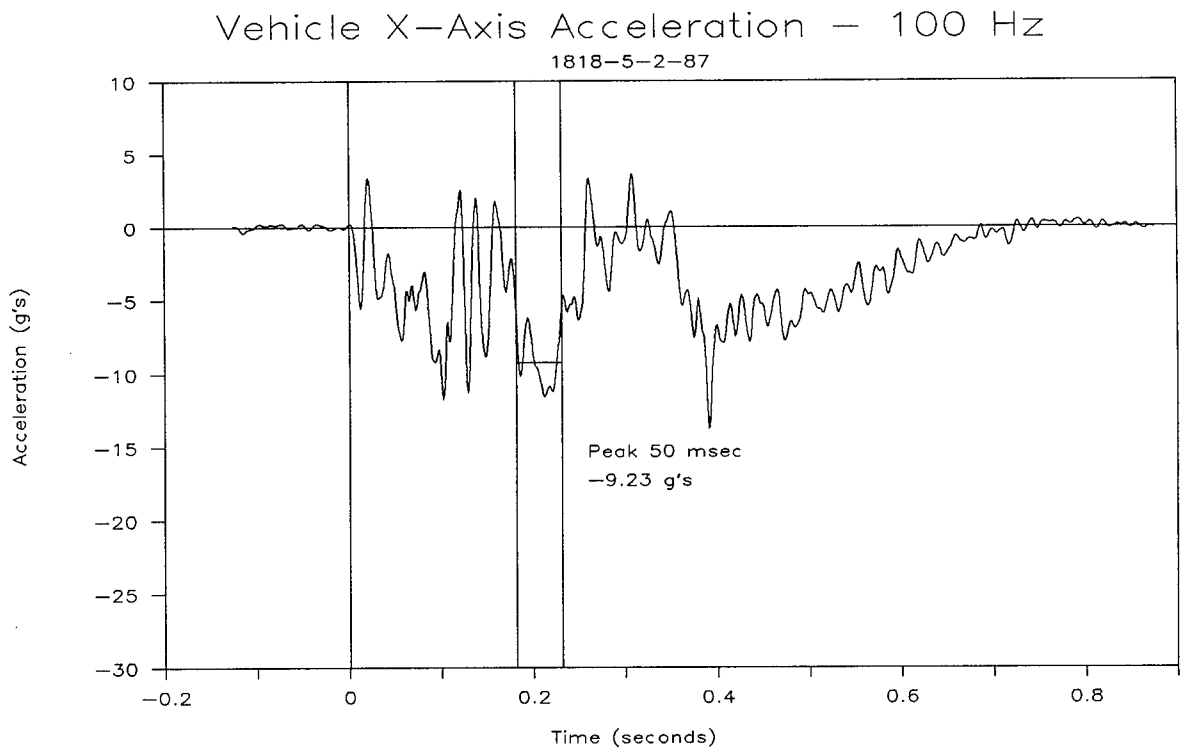

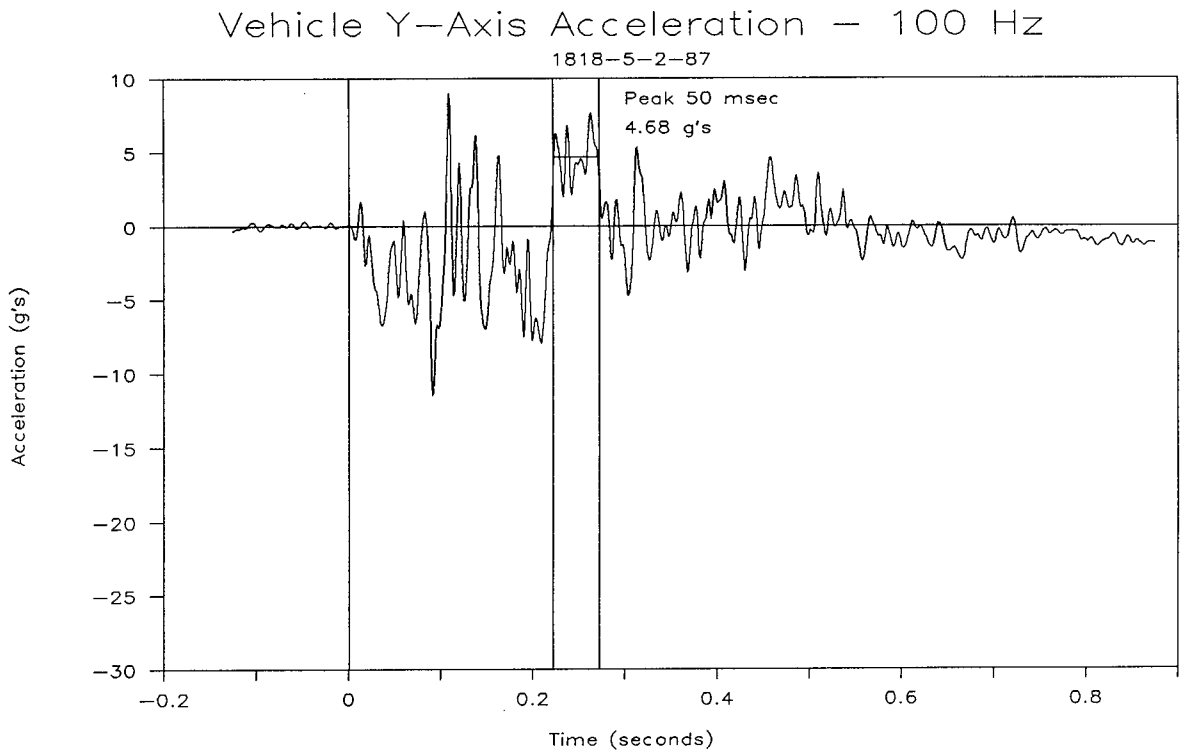

Figure 24. Vehicle acceleration, test 1818-5-2-87.

Figure 25. Posttest photographs of test vehicle, test 1818-5-2-87.

7 were broken at or below ground level. Post 6 was cracked open at the top where the rail attachment bolt pulled out. The four 8.5-in (0.22-m) long carriage bolts were sheared off at the upstream end of rail 4. Three splice plates were bent significantly. Posttest photographs of the guardrail are shown in figure 26.

3. TEST 1818-5-3-87

a. Test Device

The test device was a rough stone masonry guardwall system similar to that installed on the Skyline Drive within Shenandoah National Park. This system was 90 ft (27 m) long and contained nine 10-ft (3.0-m) long precast concrete single masonry face cores with one side infilled with stone masonry work. The stone material was a Maryland native mica schist. Three types of stone were used for the wall, as follows: ordinary rough for the face, sawed veneer for the one piece (full width) coping stones (at least 25 percent of length) and rubble building veneer for the remaining two-piece coping stones. The guardwall was built per FHWA specifications SHEN IA9 and SHEN 3BP. Espina Stone Company, the masonry contractor that built the Skyline Drive masonry guardwall, also built this guardwall. The guardwall was 27 in (0.69 m) high, 24 in (0.61 m) wide, and 90 ft (27 m) long. The wall core height was 18 in (0.46 m).

Figure 27 shows the test site and test device. Figure 28 shows a detailed drawing of the test device. Figure 29 shows pretest photographs of the guardwall system.

b. Test Vehicle

The test vehicle was a 1981 Honda Civic. The target inertial vehicle weight was 1800 ± 50 lb (817 ± 23 kg). The inertial weight of the vehicle was 1810 lb (822 kg). The target gross vehicle weight was 1950 ± 50 lb (885 ± 23 kg). The gross weight of the vehicle was 1957 lb (888 kg).

X-, y- and z-axis accelerometers were mounted in the car along with roll and yaw rate gyros. One fully-instrumented dummy was placed in the vehicle in the driver seat, unrestrained. The dummy instrumentation consisted of x-, y- and z-axis accelerometers in the head and chest and load cells in the legs. Pretest photographs of the test vehicle are shown in figure 30.

c. Impact Description

Review of the high-speed movie films, fifth wheel and speed trap data indicated that the test vehicle impacted at 61.2 mi/h (27.4 m/s) and 20.2 degrees. This review also indicated that the right corner of the vehicle impacted the guardwall 1 ft (0.30 m) upstream of the desired point.

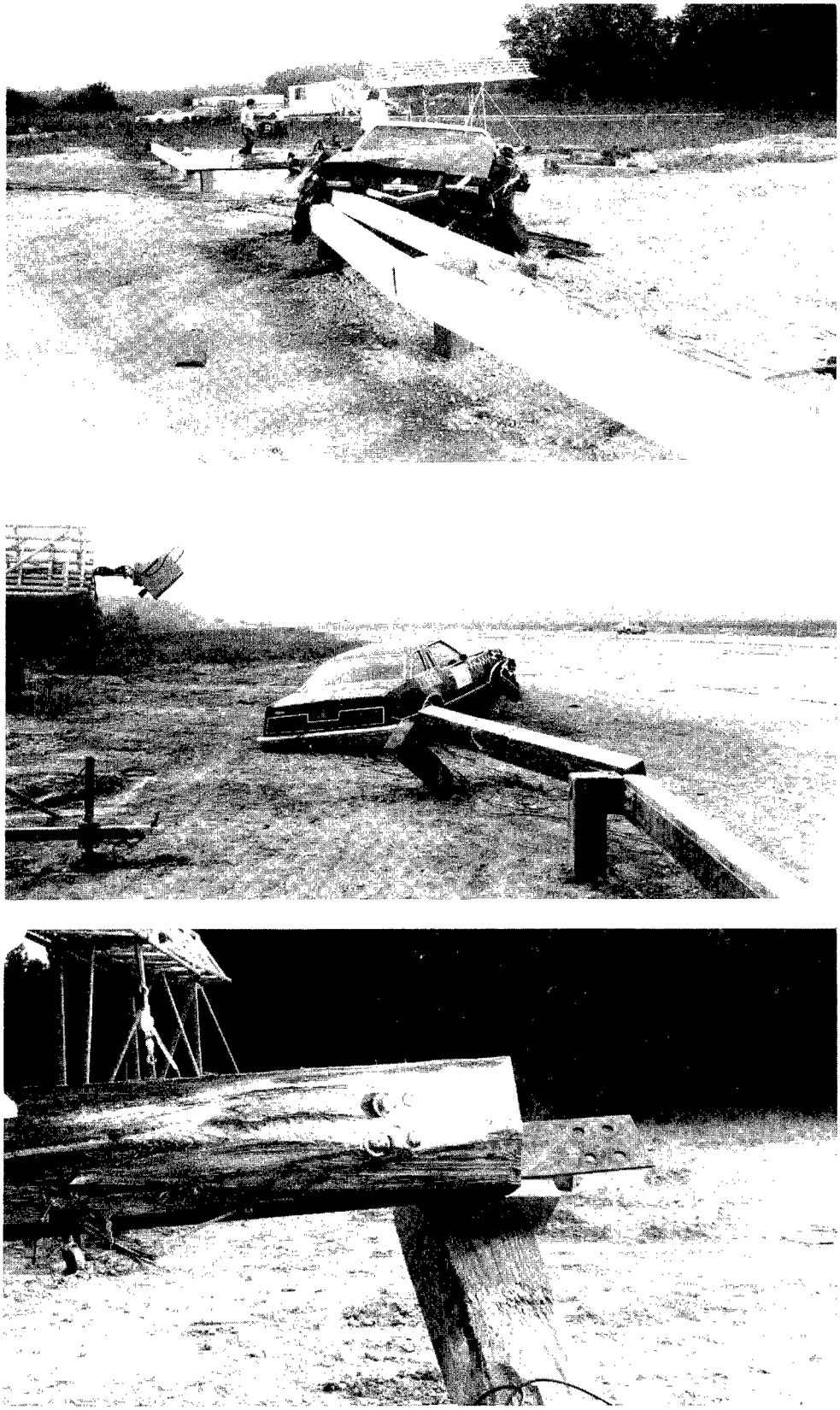

Figure 26. Posttest photographs of guardrail system, test 1818-5-2-87.

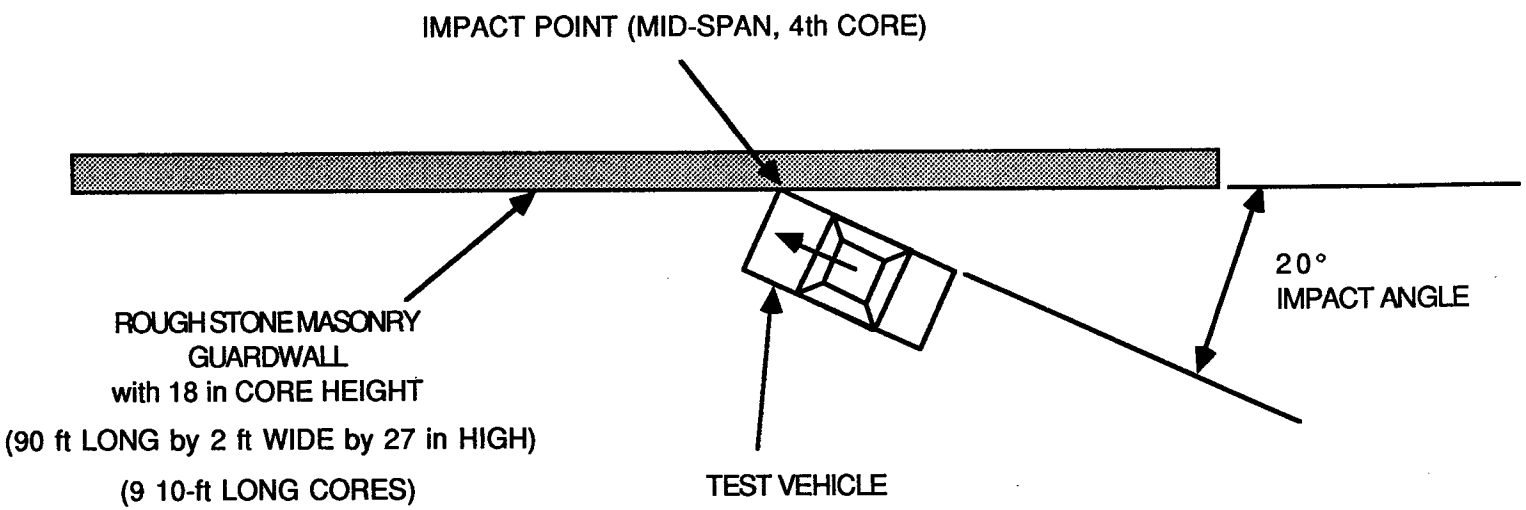

1 in = 0.03 m 1 ft = 0.30 m

Figure 27. Test site layout, test 1818-5-3-87.

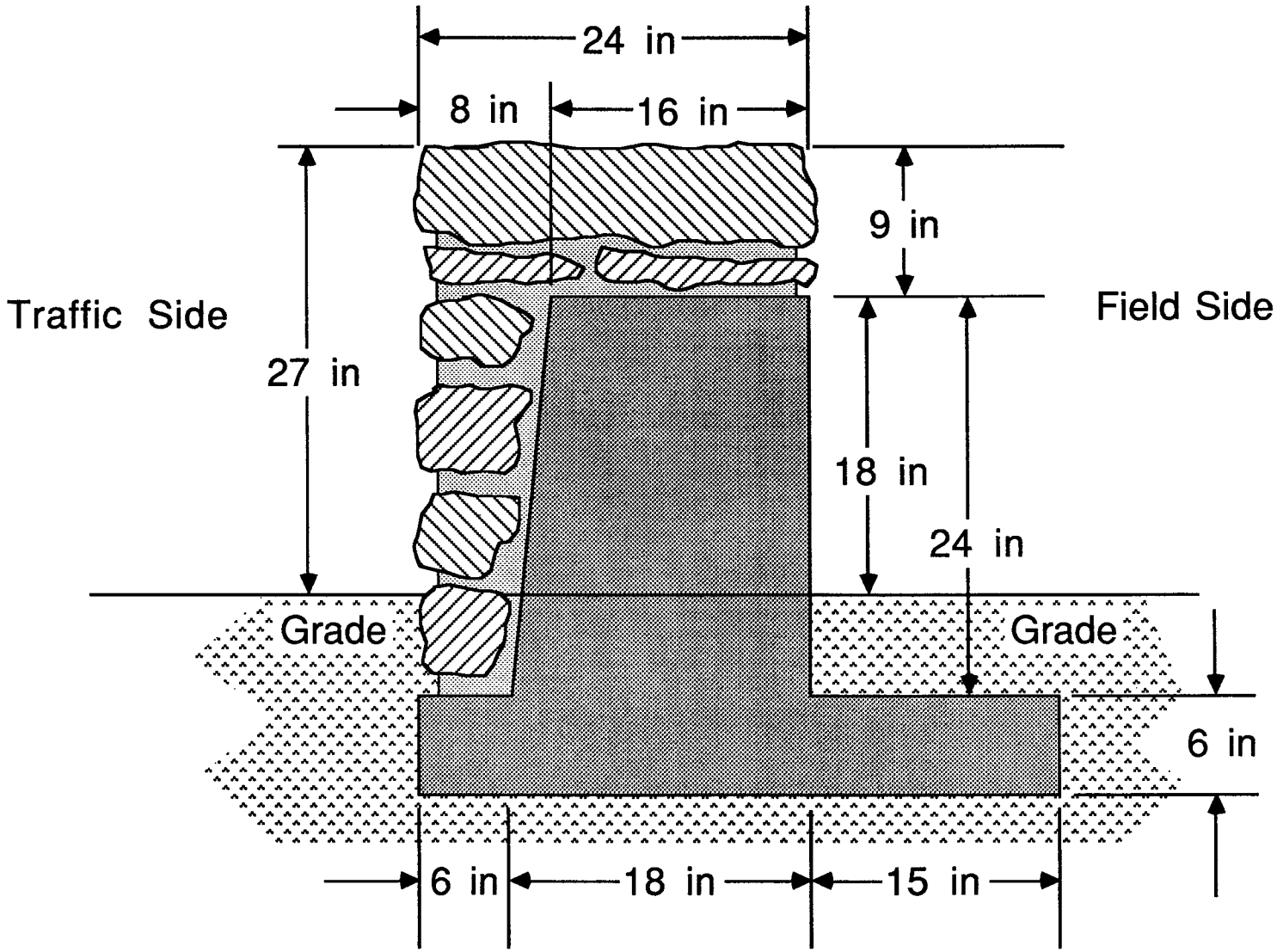

Figure 28. Test device, test 1818-5-3-87.

Figure 29. Pretest photographs of guardwall system, test 1818-5-3-87.

Figure 30. Pretest photographs of test vehicle, test 1818-5-3-87.

Upon impact, the front of the vehicle was deformed and skewed toward the non-impact side. The right front corner of the vehicle continued to crush until the vehicle A-pillar struck the wall. The vehicle then yawed around and exited the rail. The vehicle remained in contact with the wall for approximately 11 ft (3.4 m). The vehicle was redirected at 44.0 mi/h (19.7 m/s).

Inside the vehicle, it was observed that the unrestrained dummy's head impacted the windshield just inside the passenger pillar breaking the windshield.

A summary of the test conditions and results is given in figure 31. Data analysis was performed and the vehicle x-axis and y-axis, 100 Hz acceleration traces are shown in figure 32.

d. Dummy Data Analysis

Dummy data analysis was performed. The dummy data was digitized at 8000 Hz and processed to compute the required parameters. Table 14 lists the dummy head, chest and femur parameters.

Table 14. Dummy parameters, test 1818-5-3-87.

	Driver
Head	
HIC	1052
Start time	0.121500
End time	0.163875
Time duration	0.042375
Chest	
CSI	155
0.003 s Chest Acceleration	33.2
Time	0.158375
Femur	
Right Load	380
Left Load	1325

e. Vehicle Damage

Vehicle damage occurred mainly to the right front fender, grill and bumper. The front right tire rim was damaged from impacting the wall, resulting in a flat tire. The passenger side door was wedged outward and the windshield was shattered on the passenger side due to the impact from the dummy. Windshield fragments were thrown 35 to 40 ft (10.7 to 12.2 m) behind the guardwall. Posttest photographs of the vehicle are shown in figure 33.

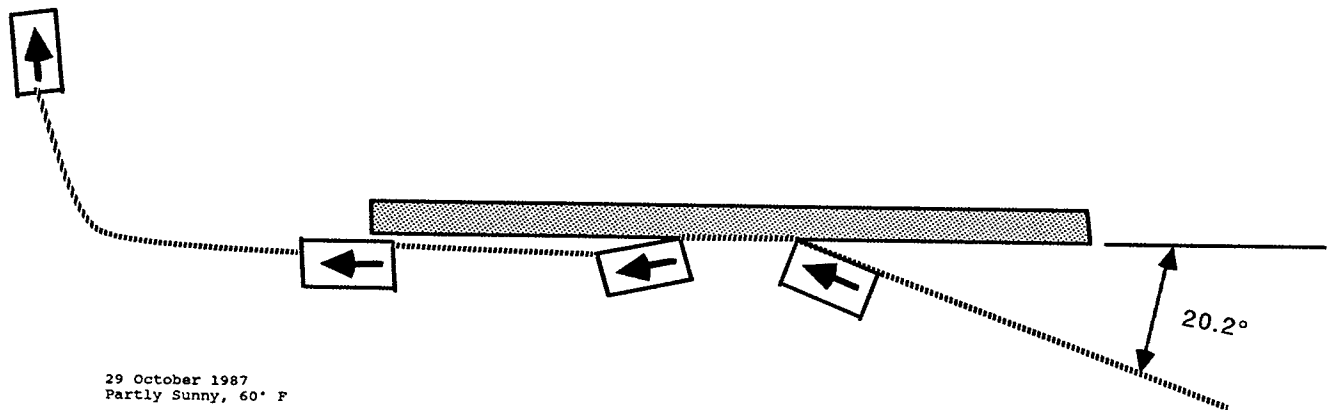

Date: 29 October 1987
Weather: Partly Sunny, 60° F

Test Vehicle: 1981 Honda Civic

Device Configuration: Rough Stone Masonry Guardwall, 90 ft long, 2 ft wide, 27 in high, 18-in core height. Similar to Skyline Drive Guardwall.

1. Vehicle Weight:

	Test Inertial	Gross
Planned:	1800 ± 50	1950 ± 50
Actual:	1810	1957

2. Number of Occupants: One

3. Occupant Model: Anthropomorphic Dummy, 50th percentile, male

4. Occupant Location: Driver Seat, Unrestrained

5. Impact:

	Speed	Angle (a)	Location
Planned:	60.0 mi/h	20°	Midspan, section 3
Actual:	61.2 mi/h	20.2°	1 ft upstream of desired point

6. Redirection Angle: 4.5 degrees

7. Redirection Speed: 44.0 mi/h (64.5 ft/s)

8. Total Speed Change: 17.2 mi/h (25.2 ft/s)

9. Total Momentum Change: 1532 lb-s

10. Vehicle Damage Index: (SAE J224a) 01RDAE3

11. NCHRP 230 Test Number: S13

12. Impact Severity:

$\frac{m(V \sin a)^2}{2}$ 27.0 kip-ft (Spec: 23 to 29 kip-ft)

13. Vehicle Analysis:

	Observed	Design/ Limit Value
NCHRP 230:		
Longitudinal:		
Delta-V at 2 ft:	-29.3 ft/s	30/40 ft/s
Ridedown Acceleration:	-1.8 g's	15/20 g's
Delta-V at 1.75 ft (actual):	-29.2 ft/s	30/40 ft/s
Ridedown Acceleration:	-1.8 g's	15/20 g's
Lateral:		
Delta-V at 1 ft:	27.5 ft/s	20/30 ft/s
Ridedown Acceleration:	9.0 g's	15/20 g's
Delta-V at 0.63 ft (actual):	21.3 ft/s	20/30 ft/s
Ridedown Acceleration:	14.4 g's	15/20 g's
TRC 191:		
Peak 50 ms acceleration:		
Longitudinal:	-13.6 g's	
Lateral:	-13.8 g's	

14. Test Results Conclusion: Vehicle was redirected by the guardwall at 44.0 mi/h and 4.5 degrees. Because the vehicle did not intrude or come to rest in the adjacent traffic lanes, the vehicle slowdown criteria does not apply. Negligible damage was done to the guardwall.

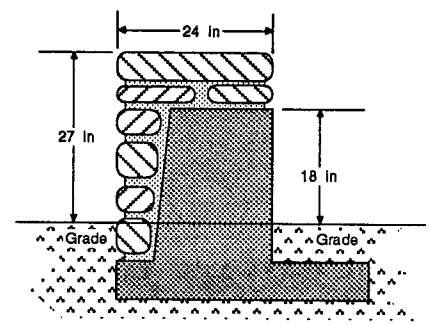

1 mi/h = 0.45 m/s
1 mi = 1609 m
1 in = 0.03 m
1 kip = 4450 N
1 ft = 0.30 m
1 kip-ft = 1355 N-m
1 lb = 0.45 kg
1 ft/s = 0.30 m/s
1 'g' = 32.2 ft/s^2 = 9.8 m/s^2
1 lb-sec = 4.45 N-s

Figure 31. Test summary, test 1818-5-3-87.

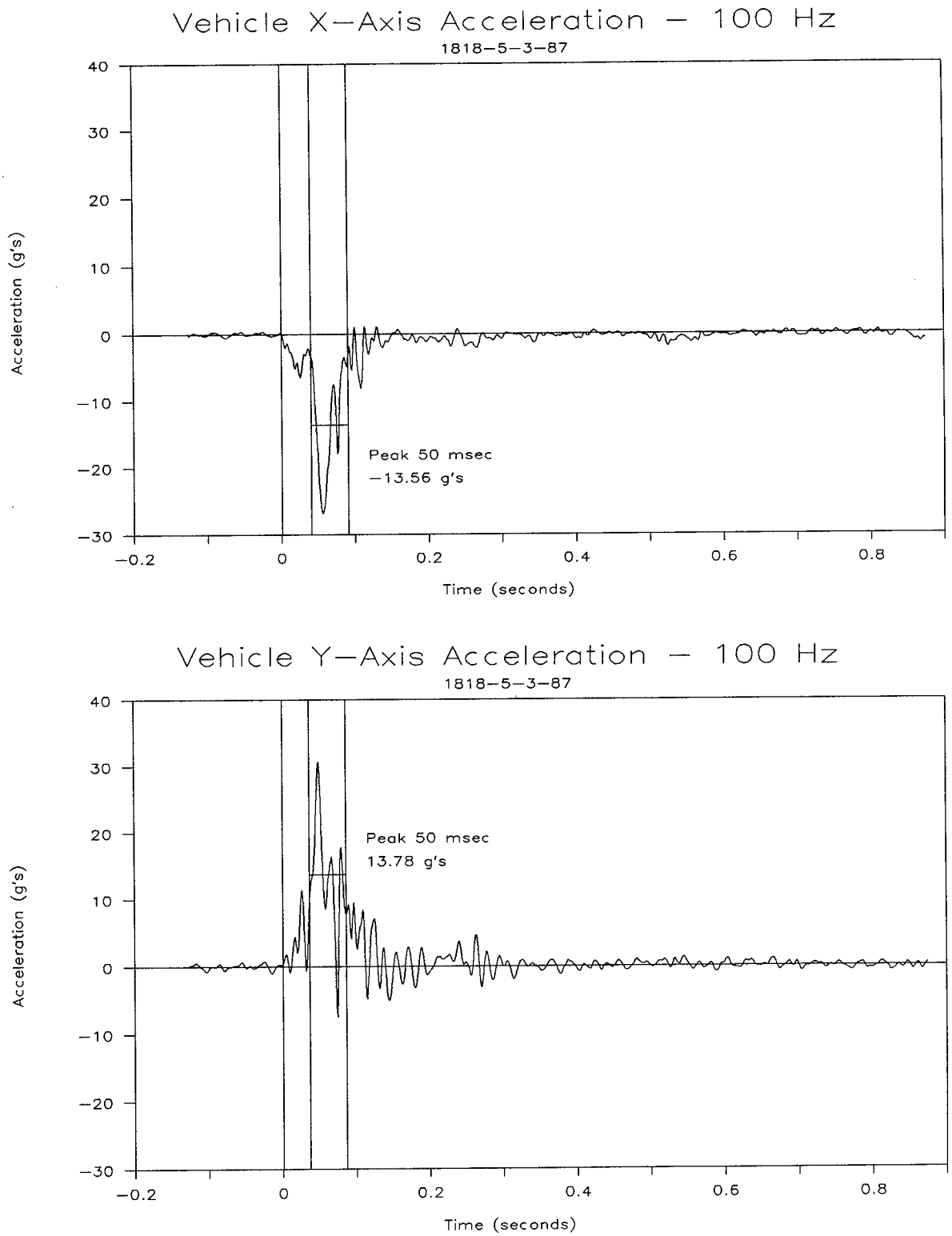

Figure 32. Vehicle acceleration, test 1818-5-3-87.

Figure 33. Posttest photographs of test vehicle, test 1818-5-3-87.

f. Guardwall Damage

Damage to the guardwall system was minimal. Paint marks were found for 11 ft (3.4 m) on the guardwall. One stone in the guardwall face was found to be slightly loose with a 2 in (0.05 m) corner chipped off. A horizontal hairline crack was created 9.5 in (0.24 m) below the top of the wall for a length of 7 ft (2.1 m). This crack corresponds to the top of the concrete core and it ran horizontally along stone surfaces. Posttest photographs of the guardwall are shown in figure 34.

4. TEST 1818-5-4-87

a. Test Device

The test device was the rough stone masonry guardwall. This system was tested in test 1818-5-3-87. The guardwall was 27 in (0.69 m) high, 24 in (0.61 m) wide, and 90 ft (27 m) long. The wall core height was 18 in (0.46 m).

Figure 35 shows the test site and test device. Figure 36 provides a drawing of the stone masonry guardwall. Figure 37 shows pretest photographs of the guardwall system.

b. Test Vehicle

The test vehicle was a 1978 Ford LTD II. The target inertial vehicle weight was 4500 ± 200 lb (2043 ± 91 kg). The inertial weight of the vehicle was 4311 lb (1957 kg). The target gross vehicle weight was 4500 ± 300 lb (2043 ± 136 kg). The gross weight of the vehicle was 4634 lb (2104 kg).

X-, y- and z-axis accelerometers were mounted in the car along with roll and yaw rate gyros. Two fully-instrumented dummies were placed in the vehicle in the driver seat, unrestrained and in the passenger seat, restrained. The dummy instrumentation consisted of x-, y- and z-axis accelerometers in the head and chest and load cells in the legs. Pretest photographs of the test vehicle are shown in figure 38.

c. Impact Description

Review of the high-speed movie films, fifth wheel and speed trap data indicated that the test vehicle impacted at 60.8 mi/h (27.2 m/s) and 25.3 degrees. This review also indicated that the right corner of the vehicle impacted the guardwall 4 in downstream of the desired impact point. The impact point was shifted 10 ft (3.0 m) from the small car impact in test 1818-5-3-87 to avoid impacting the system near the existing crack.

Upon impact, the front of the vehicle was deformed and skewed toward the non-impact side. The right front corner of the vehicle continued to crush. The vehicle rode up on top of the wall, knocking off approximately 15 ft (4.6 m) of coping stone.

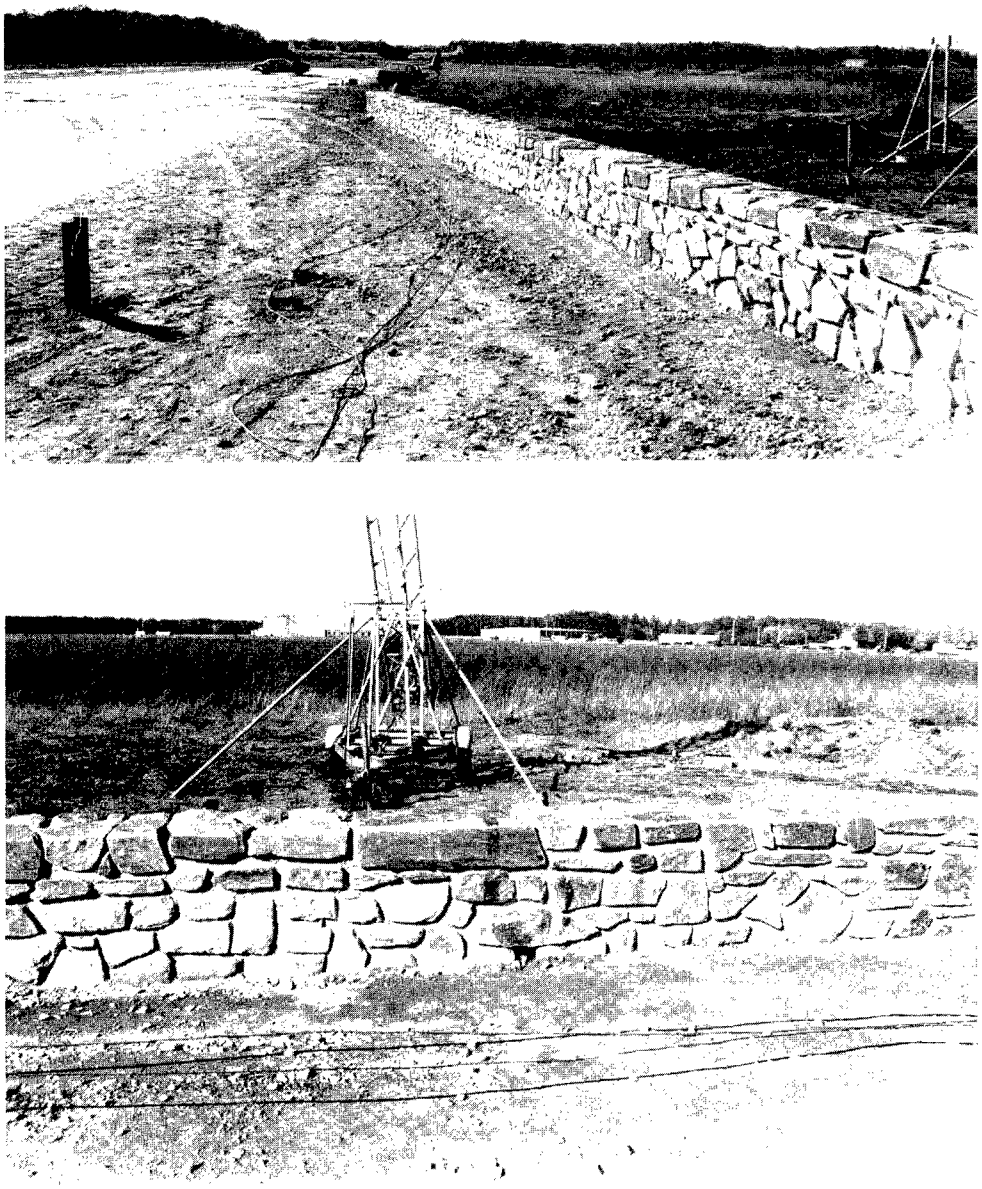

Figure 34. Posttest photographs of guardwall system, test 1818-5-3-87.

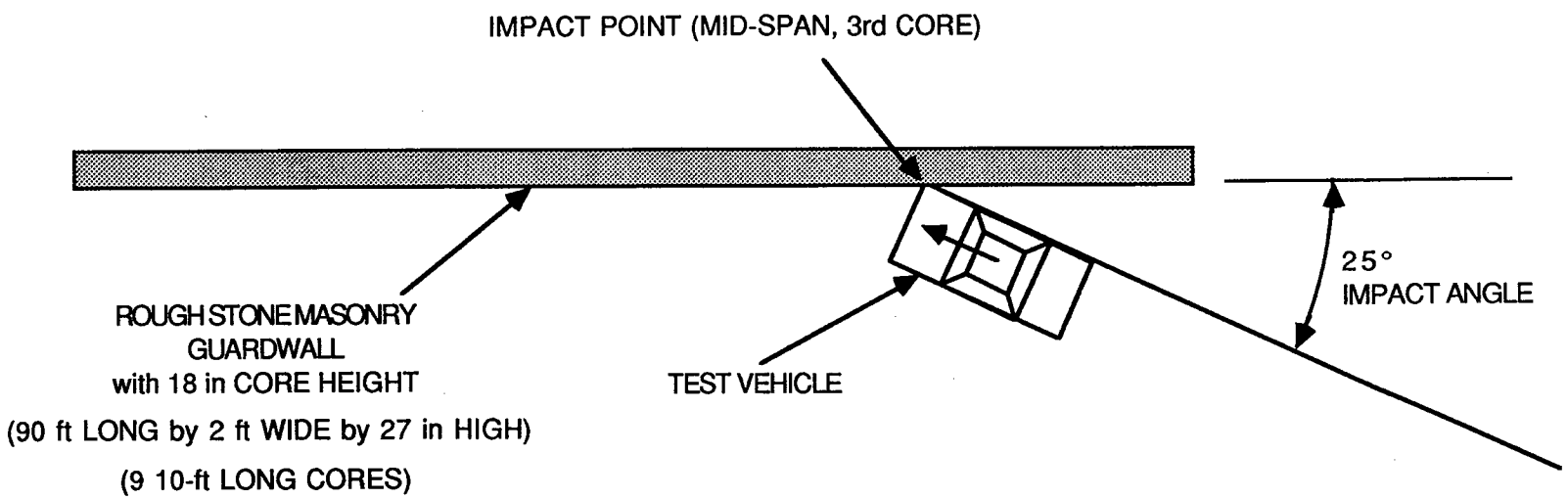

1 in = 0.03 m 1 ft = 0.30 m

Figure 35. Test site layout, test 1818-5-4-87.

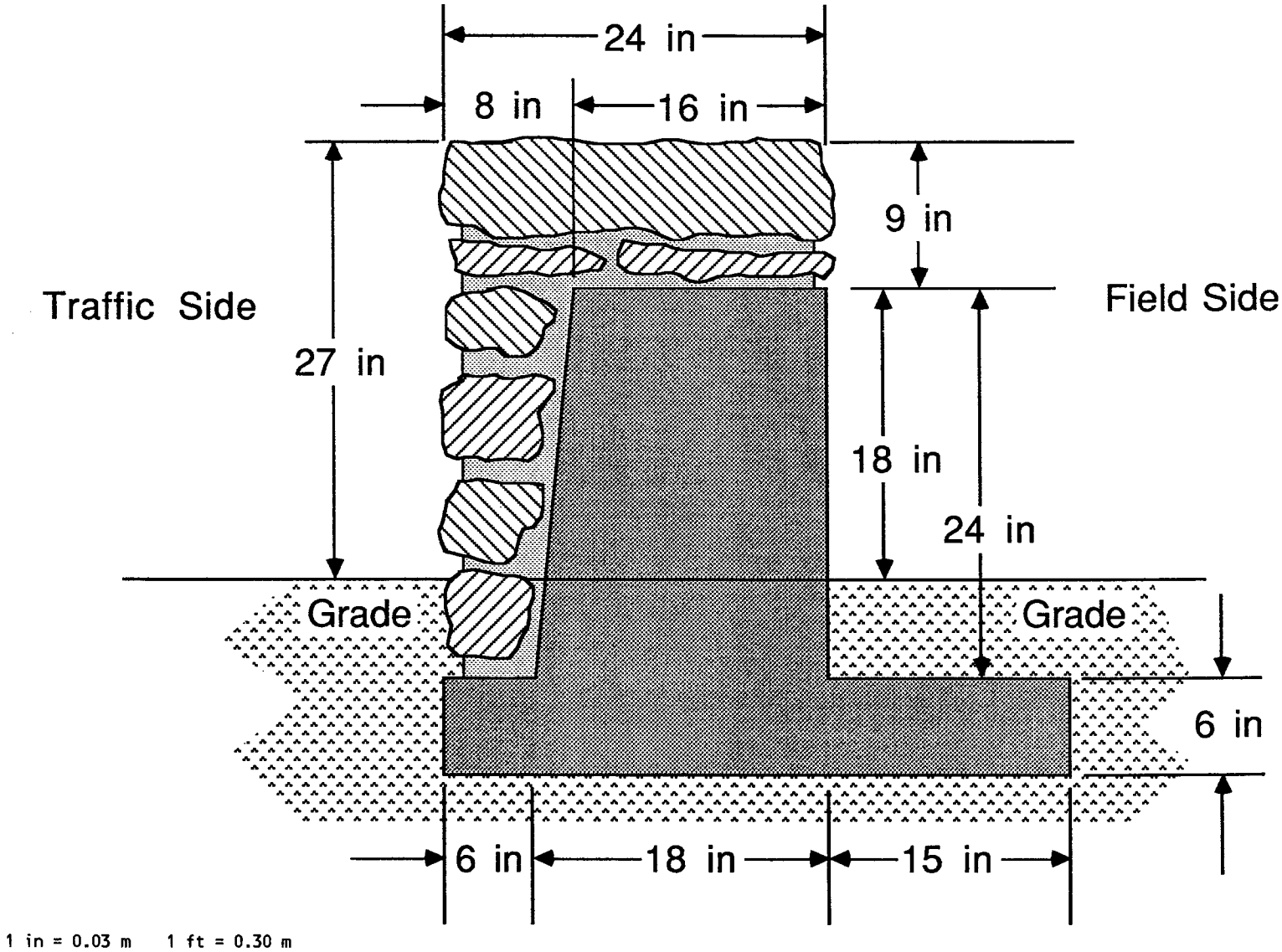

Figure 36. Test device, test 1818-5-4-87.

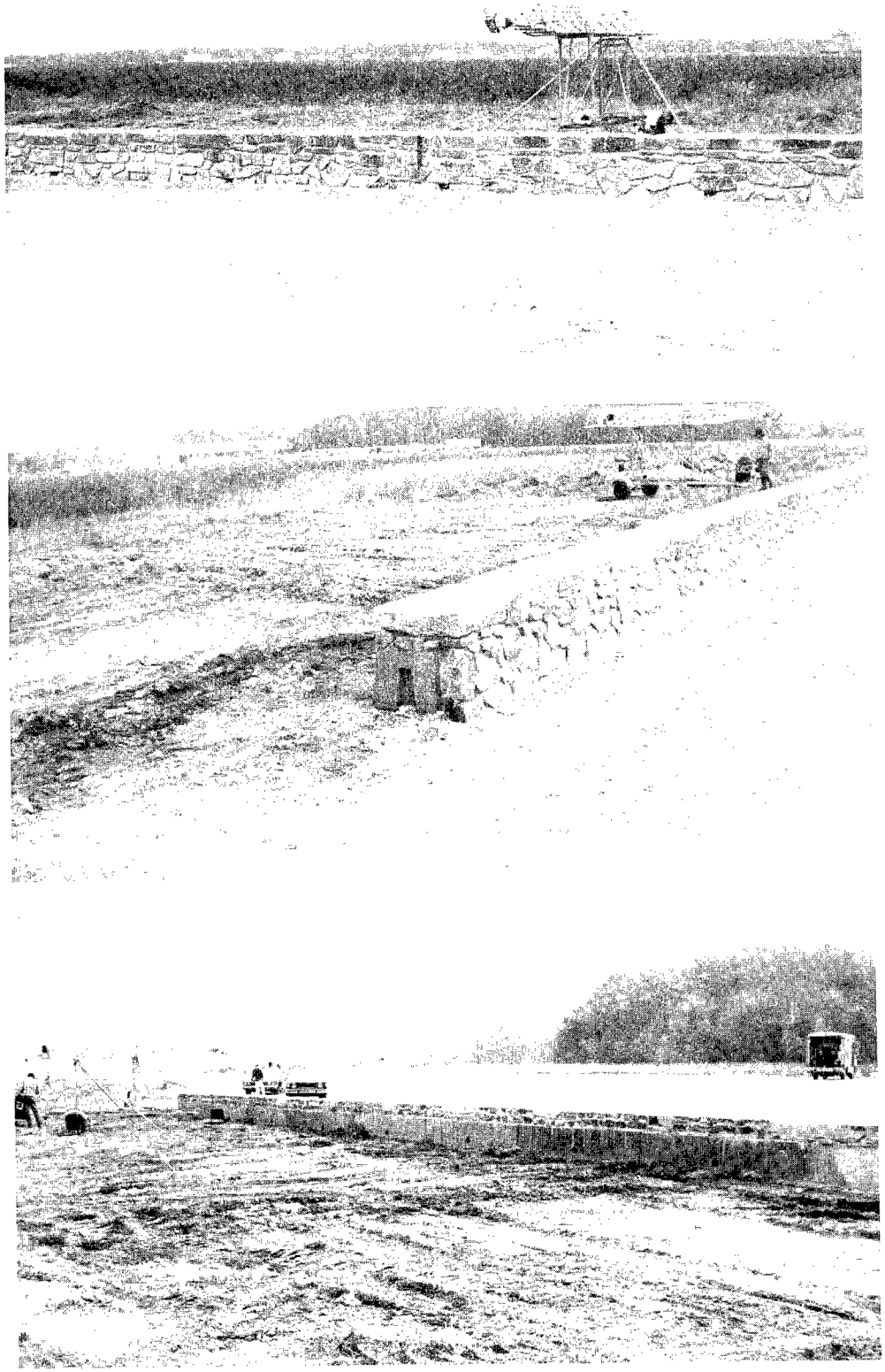

Figure 37. Pretest photographs of guardwall system, test 1818-5-4-87.

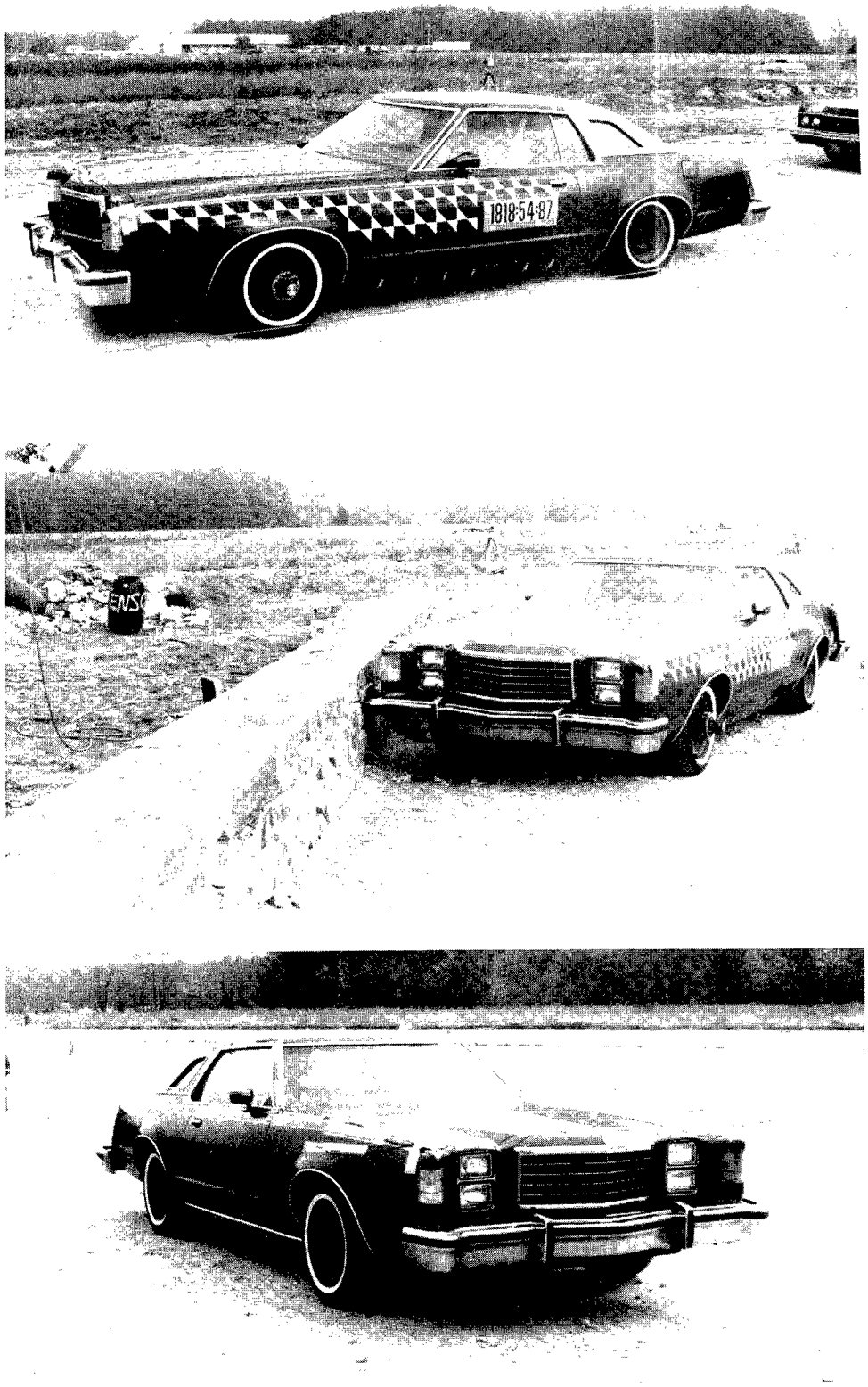

Figure 38. Pretest photographs of test vehicle, test 1818-5-4-87.

The vehicle remained in contact with the wall for approximately 64 ft (20 m) before redirecting. The vehicle was redirected at 36.4 mi/h (16.3 m/s).

Inside the vehicle, it was observed that the unrestrained dummy's head impacted the windshield on the passenger side, breaking the windshield.

A summary of the test conditions and results is given in figure 39. Data analysis was performed and the vehicle x-axis and y-axis, 100 Hz acceleration traces are shown in figure 40.

d. Dummy Data Analysis

Dummy data analysis was performed. The dummy data was digitized at 8000 Hz and processed to computed the required parameters. Table 15 lists the dummy head, chest and femur parameters.

Table 15. Dummy parameters, test 1818-5-4-87.

	Driver	Passenger
Head		
HIC	418	250
Start time	0.156750	0.120125
End time	0.189125	0.198750
Time duration	0.032375	0.078625
Chest		
CSI	830	177
0.003 s Chest Acceleration	55.0	57.7
Time	0.154000	0.095250
Femur		
Right Load	n/a	1362
Left Load	n/a	525

e. Vehicle Damage

Vehicle damage occurred mainly to the right side of the car. The right front fender, grill, bumper, rear quarterpanel, and vehicle steering and suspension were damaged significantly. The two right wheels were damaged from impacting the rail thus, resulting in flat tires. The passenger side door was wedged outward and the windshield was shattered on the passenger side due to the impact from the dummy. Posttest photographs of the vehicle are shown in figure 41.

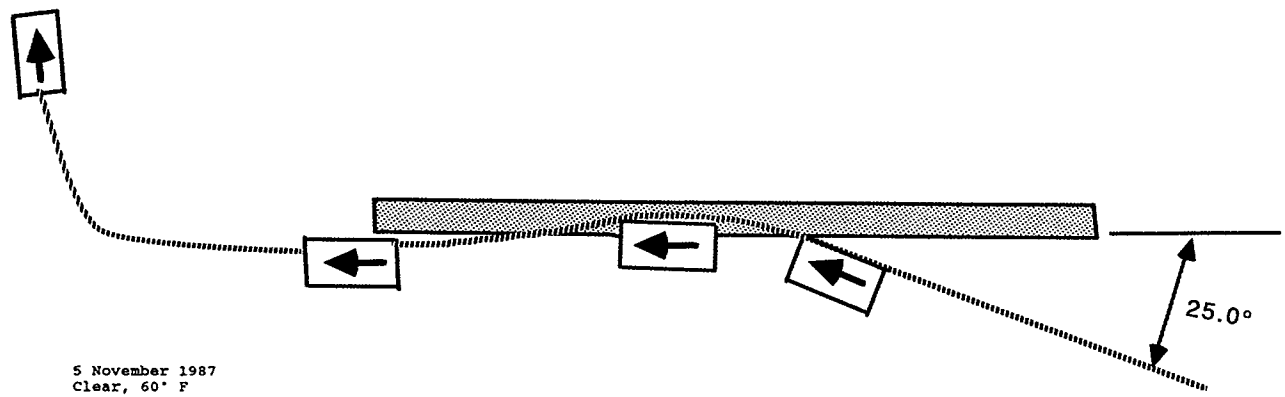

Date: 5 November 1987
Weather: Clear, 60° F

Test Vehicle: 1978 Ford LTD II

Device Configuration: Rough Stone Masonry Guardwall, 90 ft long, 2 ft wide, 27 in high, 18-in core height. Similar to Skyline Drive Guardwall.

1. Vehicle Weight:

	Test Inertial	Gross
Planned:	4500 ± 200	4500 ± 300
Actual:	4311	4634

2. Number of Occupants: Two

3. Occupant Model: Anthropomorphic Dummy, 50th percentile, male

4. Occupant Location: Driver Seat, Unrestrained
Passenger Seat, Restrained

5. Impact:

	Speed	Angle (a)	Location
Planned:	60.0 mi/h	25°	Midspan, section 3
Actual:	60.8 mi/h	25°	4 in downstream of desired point

6. Redirection Angle: 4 degrees

7. Redirection Speed: 36.4 mi/h (53.4 ft/s)

8. Total Speed Change: 24.4 mi/h (35.8 ft/s)

9. Total Momentum Change: 5152 lb-s

10. Vehicle Damage Index: (SAE J224a) 01RDAE3

11. NCHRP 230 Test Number: 10

12. Impact Severity:

$\frac{m(V \sin a)^2}{2}$ 95.1 kip-ft
(Spec: 88 to 114 kip-ft)

13. Vehicle Analysis:

	Observed	Design/ Limit Value
NCHRP 230:		
Longitudinal:		
Delta-V at 2 ft:	-34.8 ft/s	30/40 ft/s
Ridedown Acceleration:	-7.9 g's	15/20 g's
Delta-V at 1.92 ft (driver and passenger actual):	-35.2 ft/s	30/40 ft/s
Ridedown Acceleration:	-7.9 g's	15/20 g's
Lateral:		
Delta-V at 1 ft:	-18.9 ft/s	20/30 ft/s
Ridedown Acceleration:	-11.7 g's	15/20 g's
Delta-V at 0.83 ft (driver and passenger actual):	-18.7 ft/s	20/30 ft/s
Ridedown Acceleration:	-11.7 g's	15/20 g's
TRC 191:		
Peak 50 ms acceleration:		
Longitudinal:	-11.0 g's	
Lateral:	8.1 g's	

14. Test Results Conclusion: Vehicle rode up on guardwall and was redirected. Significant damage occurred to guardwall - 20 ft of coping stone knocked off top of wall. Vehicle was redirected by the guardwall at 36.4 mi/h and 4 degrees. Because the vehicle did not intrude or come to rest in the adjacent traffic lanes, the vehicle slowdown criteria does not apply.

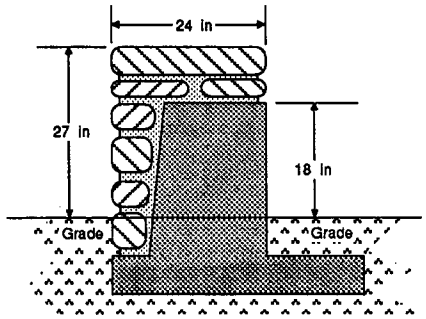

1 mi/h = 0.45 m/s
1 mi = 1609 m

1 in = 0.03 m
1 kip = 4450 N

1 ft = 0.30 m
1 kip-ft = 1355 N-m

1 lb = 0.45 kg
1 ft/s = 0.30 m/s

1 'g' = 32.2 ft/s^2 = 9.8 m/s^2
1 lb-sec = 4.45 N-s

Figure 39. Test summary, test 1818-5-4-87.

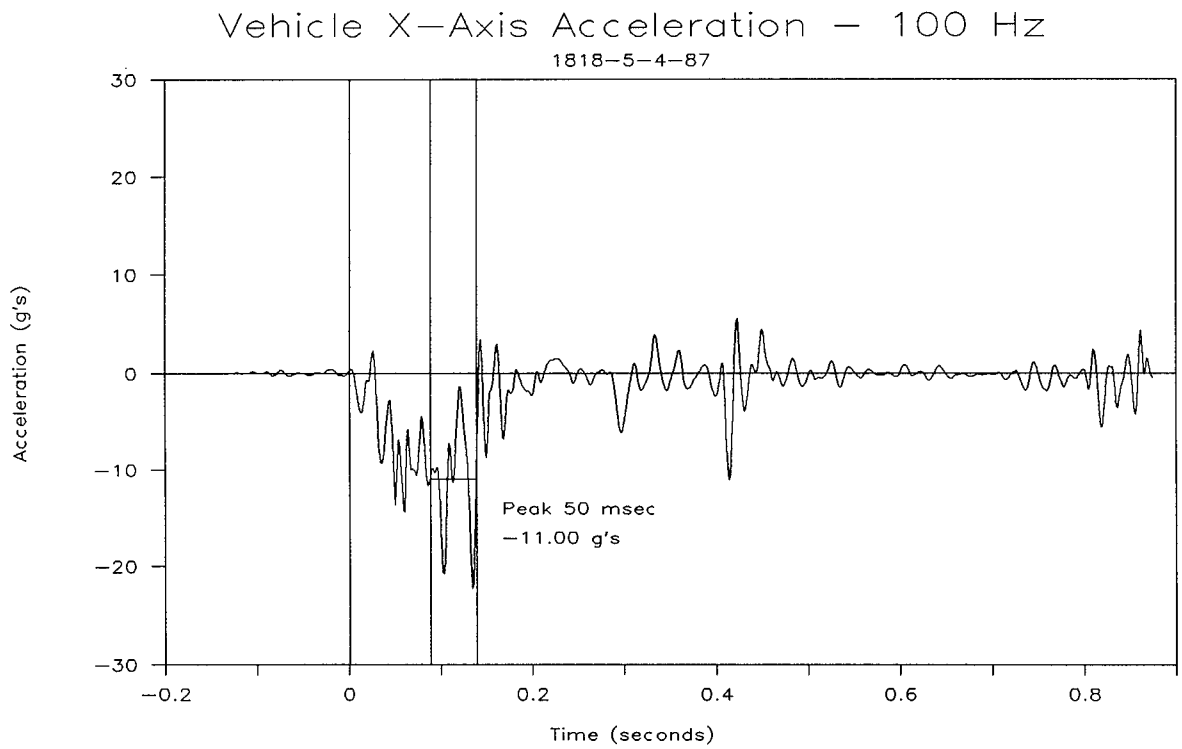

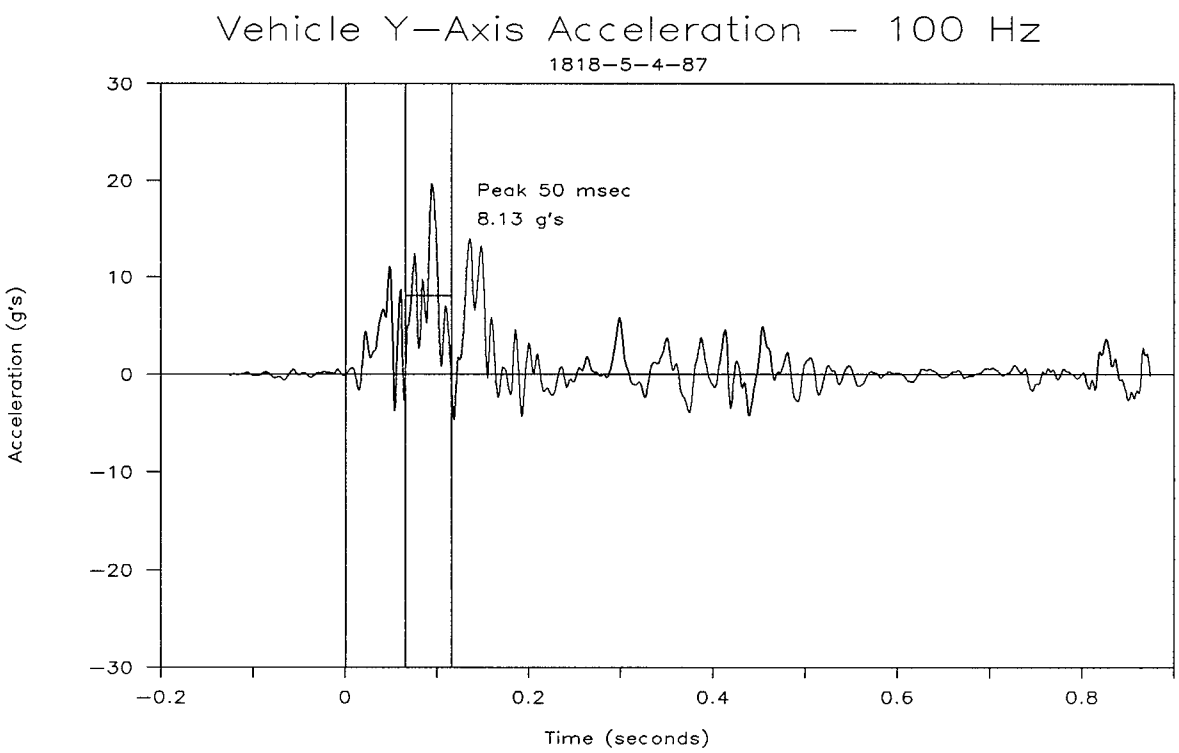

Figure 40. Vehicle acceleration, test 1818-5-4-87.

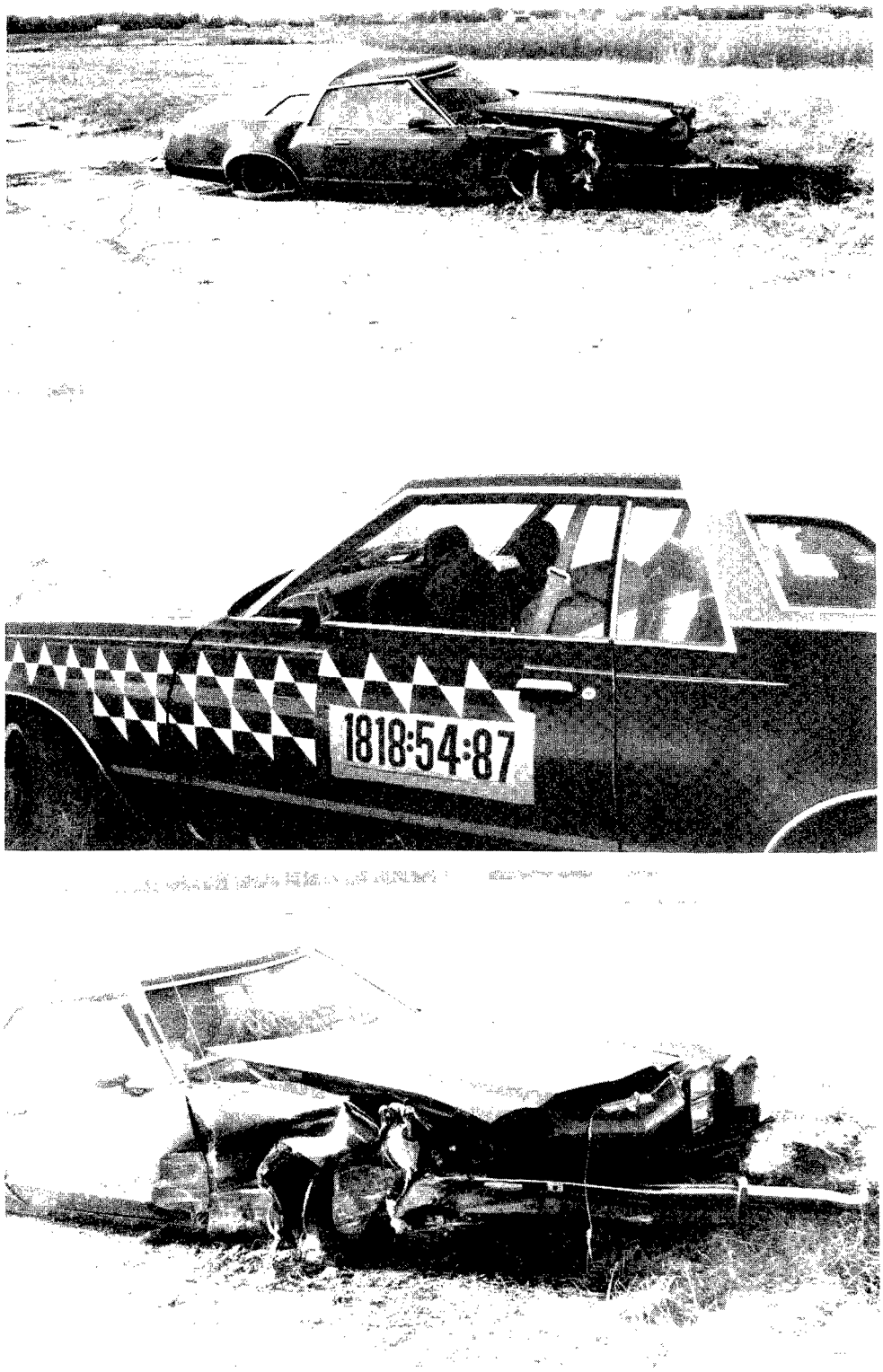

Figure 41. Posttest photographs of test vehicle, test 1818-5-4-87.

f. Guardwall Damage

Damage to the guardwall system was significant. 15 ft (4.6 m) of coping stone was knocked off the wall, 4 ft (1.22 m) of coping stone was angled back, and a one-piece coping stone was dislodged. No other damage to the face or coping was observed. No displacement of the concrete cores was observed. Posttest photographs of the guardwall are shown in figure 42.

5. TEST 1818-5-88

a. Test Device

The test device was a rough stone masonry guardwall. This system was similar to the system tested in tests 1818-5-3-87 and 1818-5-4-87. The guardwall was 27 in (0.69 m) high, 24 in (0.61 m) wide, and 90 ft (27 m) long. For this test, the core was raised to 20 in (0.51 m). This was accomplished by removing the old coping stones, removing part of the front stonework, grading in front of the wall to achieve a 20-in (0.51-m) core height, and replacing the stone to a 27-in (0.69-m) height above grade.

Figure 43 shows the test site and test device. Figure 44 provides a detailed drawing of the stone masonry guardwall. Figure 45 shows pretest photographs of the guardwall system.

b. Test Vehicle

The test vehicle was a 1982 Plymouth Gran Fury. The target inertial vehicle weight was 4500 ± 200 lb (2043 ± 91 kg). The inertial weight of the vehicle was 4325 lb (1964 kg). The target gross vehicle weight was 4500 ± 300 lb (2043 ± 136 kg). The gross weight of the vehicle was 4650 lb (2111 kg).

X-, y- and z-axis accelerometers were mounted in the car along with roll and yaw rate gyros. Two uninstrumented dummies were placed in the vehicle in the driver seat, unrestrained and in the passenger seat, restrained. Pretest photographs of the test vehicle are shown in figure 46.

c. Impact Description

Review of the high-speed movie films, fifth wheel and speed trap data indicated that the test vehicle impacted at 61.0 mi/h (27.3 m/s) and 24 degrees. This review also indicated that the right corner of the vehicle impacted the guardwall 1 ft (0.30 m) downstream of the desired point.

Upon impact, the front of the vehicle was deformed and skewed toward the non-impact side. The hood came open just after impact. The passenger side door bent open but did not come unlatched. The right front corner of the vehicle continued to crush until the vehicle A-pillar struck the wall. The vehicle then yawed around and exited the wall. The vehicle remained in

Figure 42. Posttest photographs of guardwall system, test 1818-5-4-87.

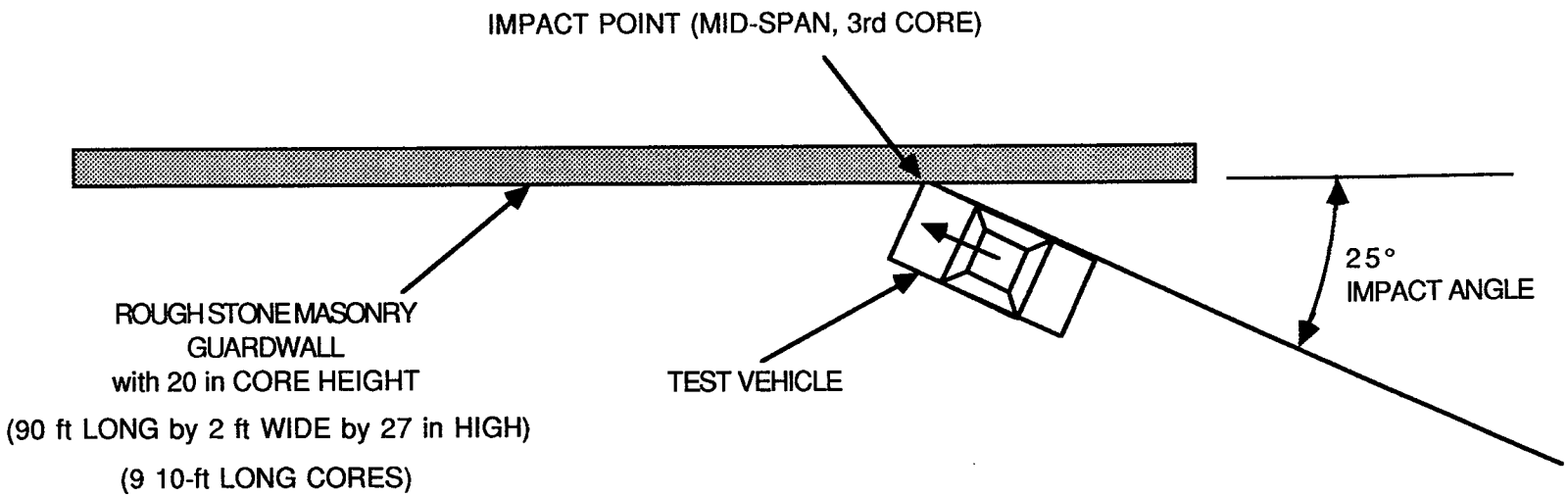

1 in = 0.03 m 1 ft = 0.30 m

Figure 43. Test site layout, test 1818-5-88.

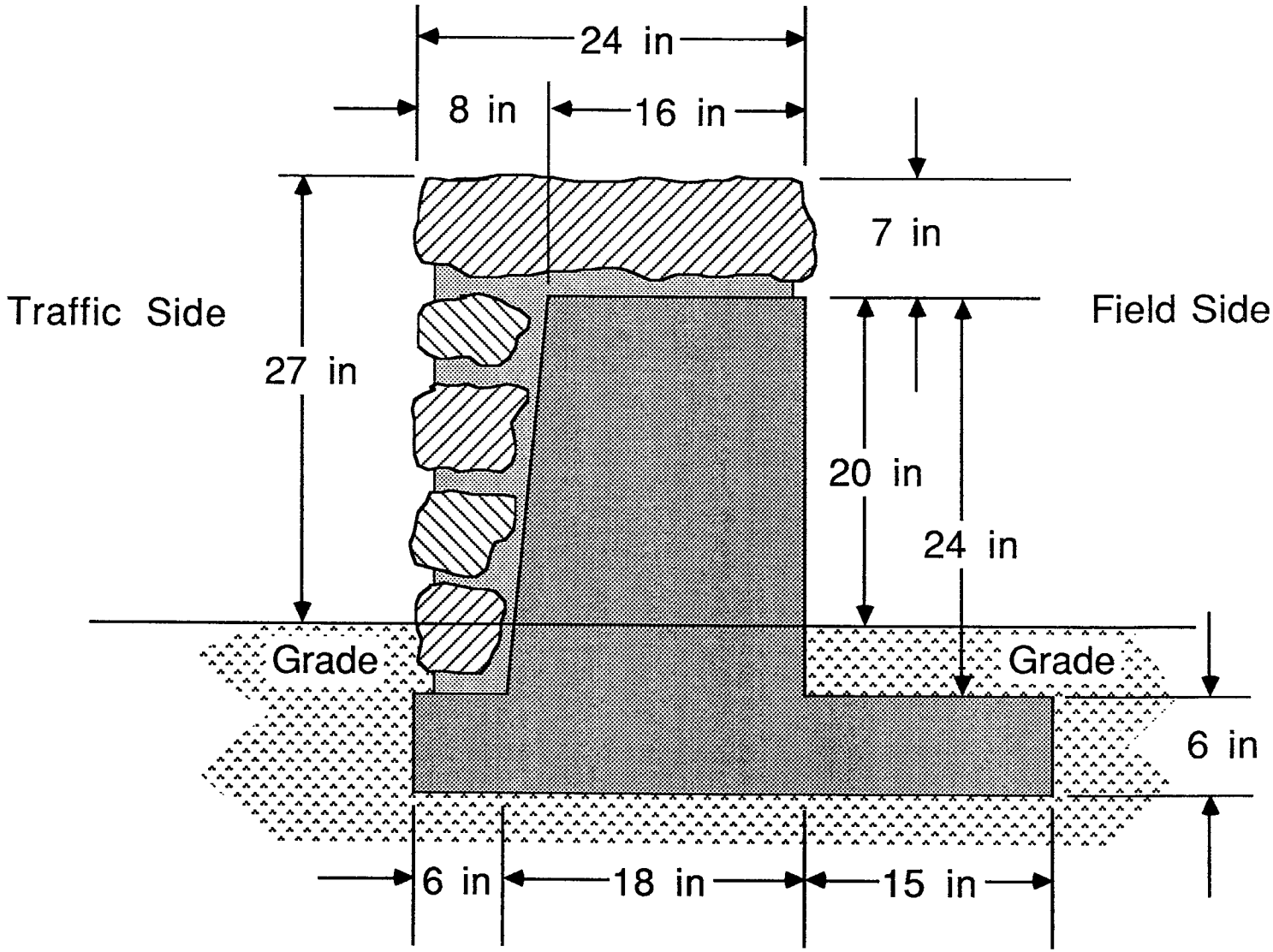

1 in = 0.03 m 1 ft = 0.30 m

Figure 44. Test device, test 1818-5-88.

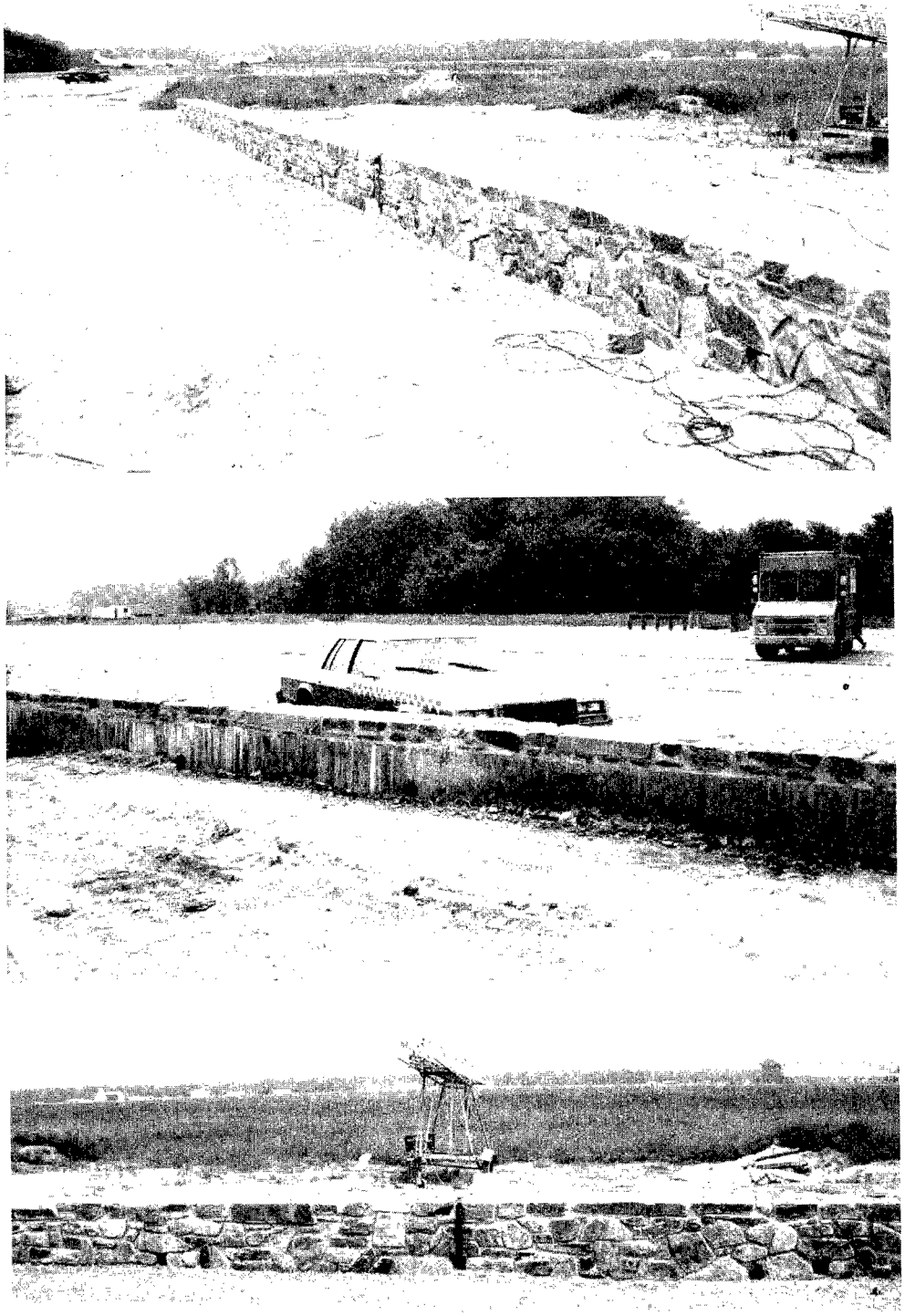

Figure 45. Pretest photographs of guardwall system, test 1818-5-88.

Figure 46. Pretest photographs of test vehicle, test 1818-5-88.

contact with the wall for approximately 17 ft (5.2 m). The vehicle was redirected at 37.9 mi/h (16.9 m/s) and 6 degrees. The vehicle came to rest 25 ft (7.6 m) past the end of the wall, 13 ft (4.0 m) in front of the wall.

Inside the vehicle, it was observed that the unrestrained driver dummy punched out the lower passenger side of the windshield and came to rest in this position. The restrained passenger dummy struck the door but remained seated throughout the impact event.

A summary of the test conditions and results is given in figure 47. Due to a data cable failure, no data was recorded during the test.

d. Vehicle Damage

Vehicle damage occurred mainly to the right side of the car. The right front fender, grill, bumper, rear quarterpanel, and vehicle steering suspension were damaged significantly. The passenger side door was wedged outward and the windshield was shattered on the passenger side due to the impact from the dummy. Posttest photographs of the vehicle are shown in figure 48.

e. Guardwall Damage

This rough stone guardwall performed as designed. No structural damage was evident. One 1-ft (0.30-m) long hairline crack was detected on the front face, downstream of impact. Two stones had front faces cleaved off, probably by the rear bumper as the vehicle was redirected. Posttest photographs of the guardwall are shown in figure 49.

6. TEST 1818-5-6-87

a. Test Device

The test device was a blocked-out, steel-backed timber guardrail designed by the FHWA WFLHD. This system is similar to the system tested in test 1818-5-2-87. The posts were 10 in by 12 in by 7 ft (0.25 m by 0.30 m by 2.1 m). The post size was the only detail that was changed from test 1818-5-2-87. The guardrail was 90 ft (27 m) long. The rail height was 27 in (0.69 m) and the posts were embedded 58 in (1.47 m).

Figure 50 shows the test site and test device. Figure 51 shows a detailed drawing of the system. Figure 52 shows pretest photographs of the guardrail system.

b. Test Vehicle

The test vehicle was a 1978 Ford LTD II. The target inertial vehicle weight was 4500 ± 200 lb (2043 ± 91 kg). The inertial weight of the vehicle was 4309 lb (1956 kg). The target gross

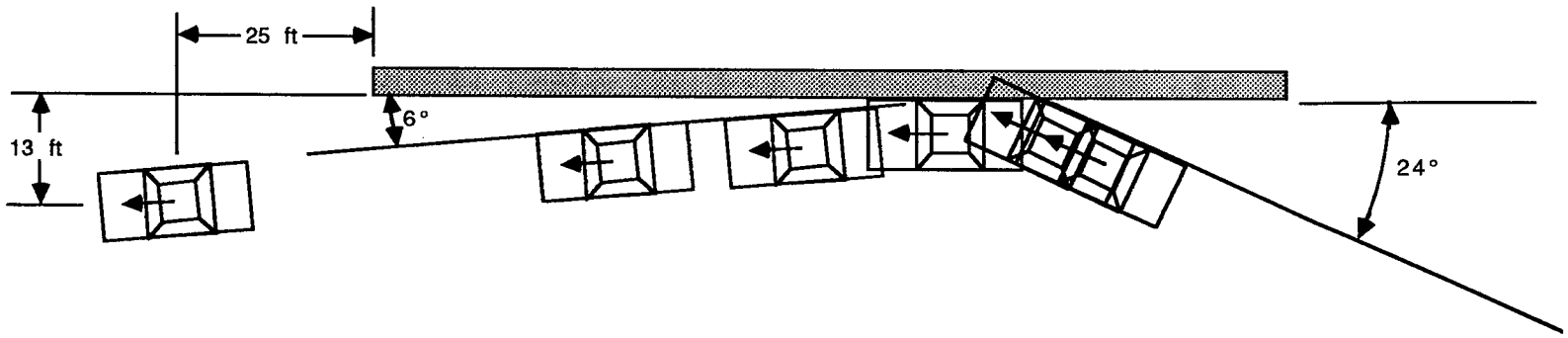

Date: 23 May 1988
Weather: Clear, 60° F

Test Vehicle: 1981 Plymouth Gran Fury

Device Configuration: Rough Stone Masonry Guardwall, 90 ft long, 2 ft wide, 27 in high, 20-in core height. Similar to Skyline Drive Guardwall.

1. Vehicle Weight:

	Test Inertial	Gross
Planned:	4500 ± 200	4500 ± 300
Actual:	4325	4650

2. Number of Occupants: Two

3. Occupant Model: Anthropomorphic Dummy, 50th percentile, male

4. Occupant Location: Driver Seat, Unrestrained
Passenger Seat, Restrained

5. Impact:

	Speed	Angle (a)	Location
Planned:	60.0 mi/h	25°	Midspan, section 3
Actual:	61.0 mi/h	24°	1 ft downstream of desired point

6. Redirection Angle: 6 degrees

7. Redirection Speed: 37.9 mi/h (55.6 ft/s)

8. Total Speed Change: 23.1 mi/h (33.9 ft/s)

9. Total Momentum Change: 4895 lb-s

10. Vehicle Damage Index: (SAE J224a) 01RFEW3

11. NCHRP 230 Test Number: 10

12. Impact Severity:

$$\frac{m(V \sin a)^2}{2}$$

88.9 kip-ft
(Spec: 88 to 114 kip-ft)

13. Test Results Conclusion: Vehicle was smoothly redirected by the guardwall at 37.9 mi/h and 6 degrees. Because the vehicle did not intrude or come to rest in the adjacent traffic lanes, the vehicle slowdown criteria does not apply.

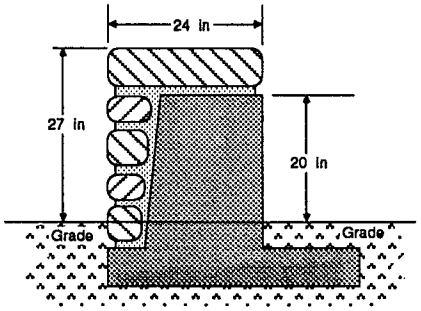

1 mi/h = 0.45 m/s
1 mi = 1609 m
1 in = 0.03 m
1 kip = 4450 N
1 ft = 0.30 m
1 kip-ft = 1355 N-m
1 lb = 0.45 kg
1 ft/s = 0.30 m/s
1 'g' = 32.2 ft/s^2 = 9.8 m/s^2
1 lb-sec = 4.45 N-s

Figure 47. Test summary, test 1818-5-88.

Figure 48. Posttest photographs of test vehicle, test 1818-5-88.

Figure 49. Posttest photographs of guardwall system, test 1818-5-88.

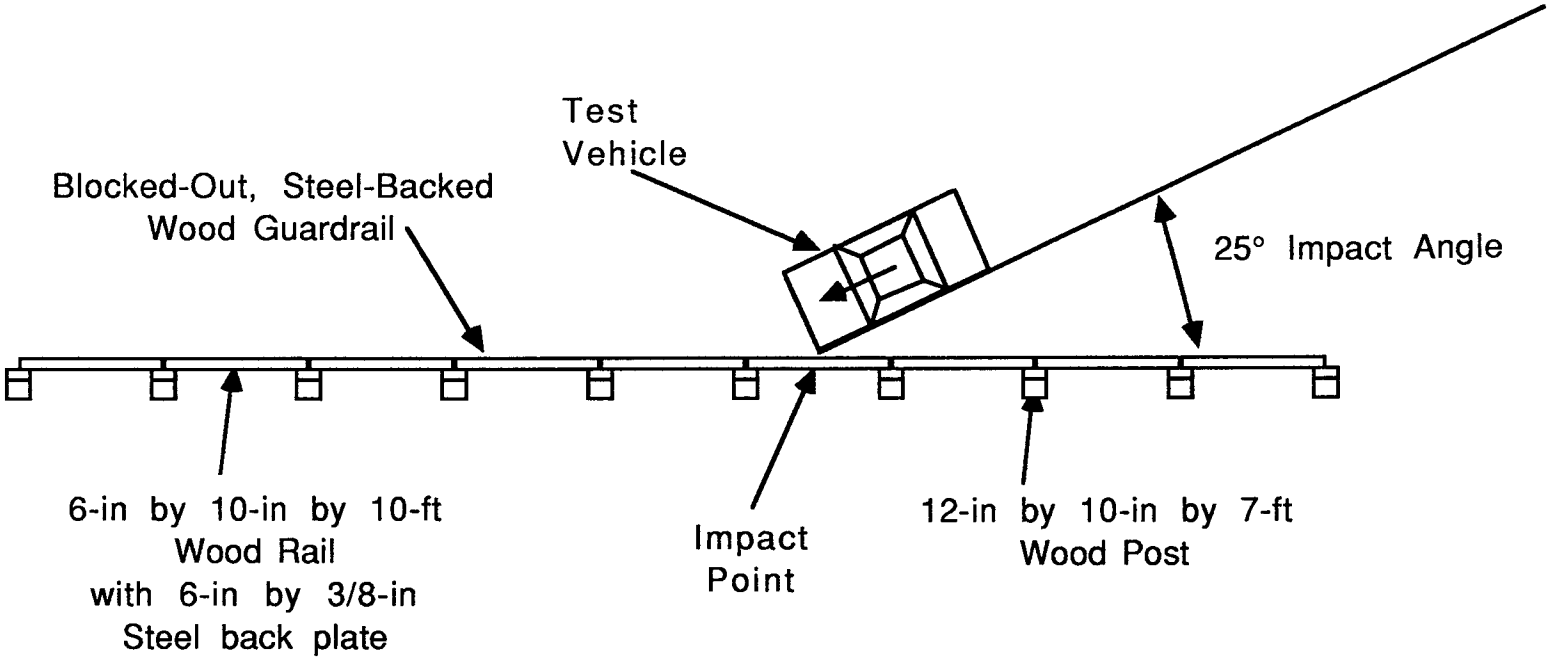

Design also features:
4-in by 9-in by 12-in blockout between post and splice plate
6-in by 3-ft by 3/8-in splice plate
Single bolt splice plate attachment
4 bolt per rail-end attachment to splice plate

1 in = 0.03 m 1 ft = 0.30 m

Figure 50. Test site layout, test 1818-5-6-87.

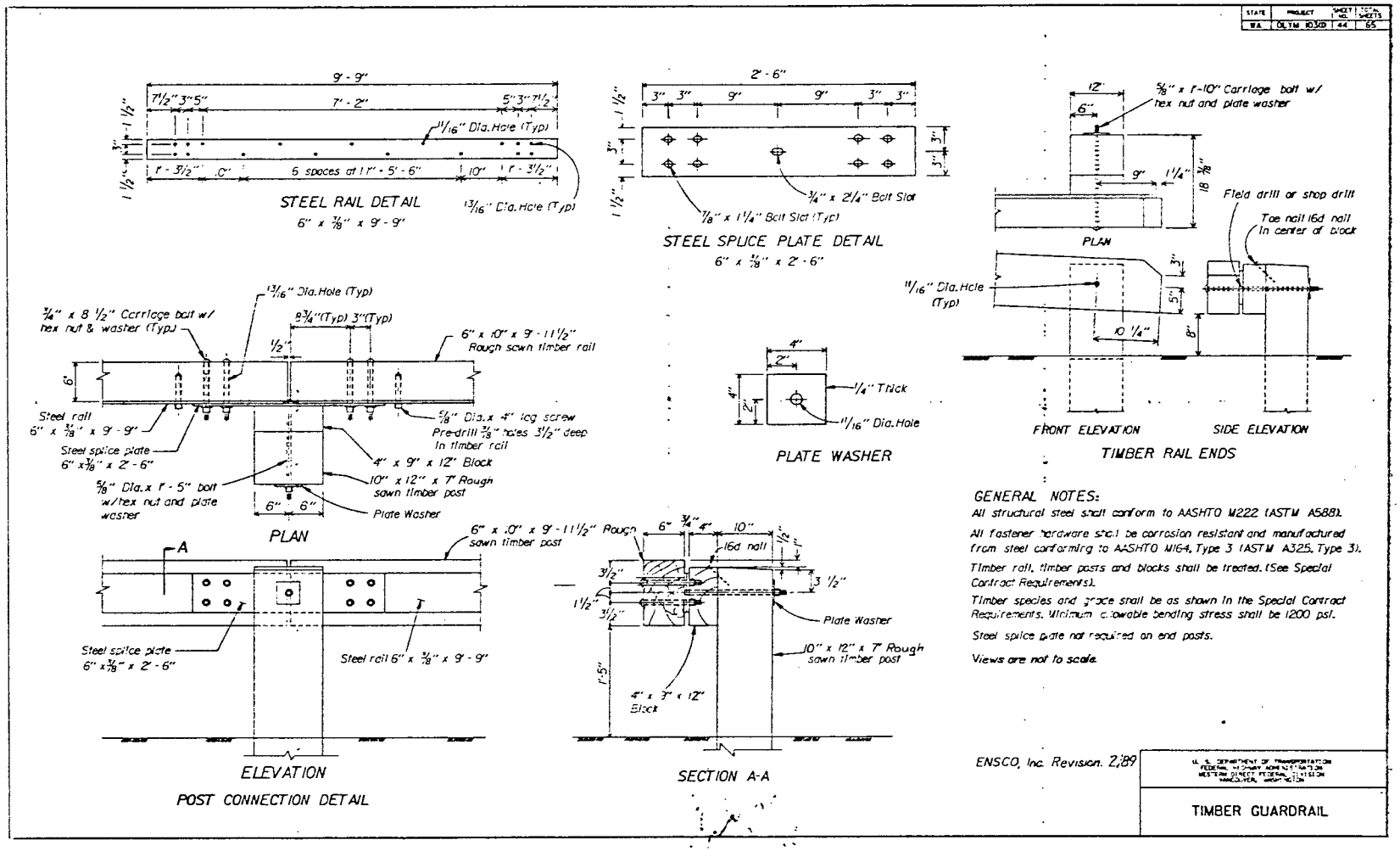

1 in = 0.03 m 1 ft = 0.30 m

Figure 51. Test device, test 1818-5-6-87.

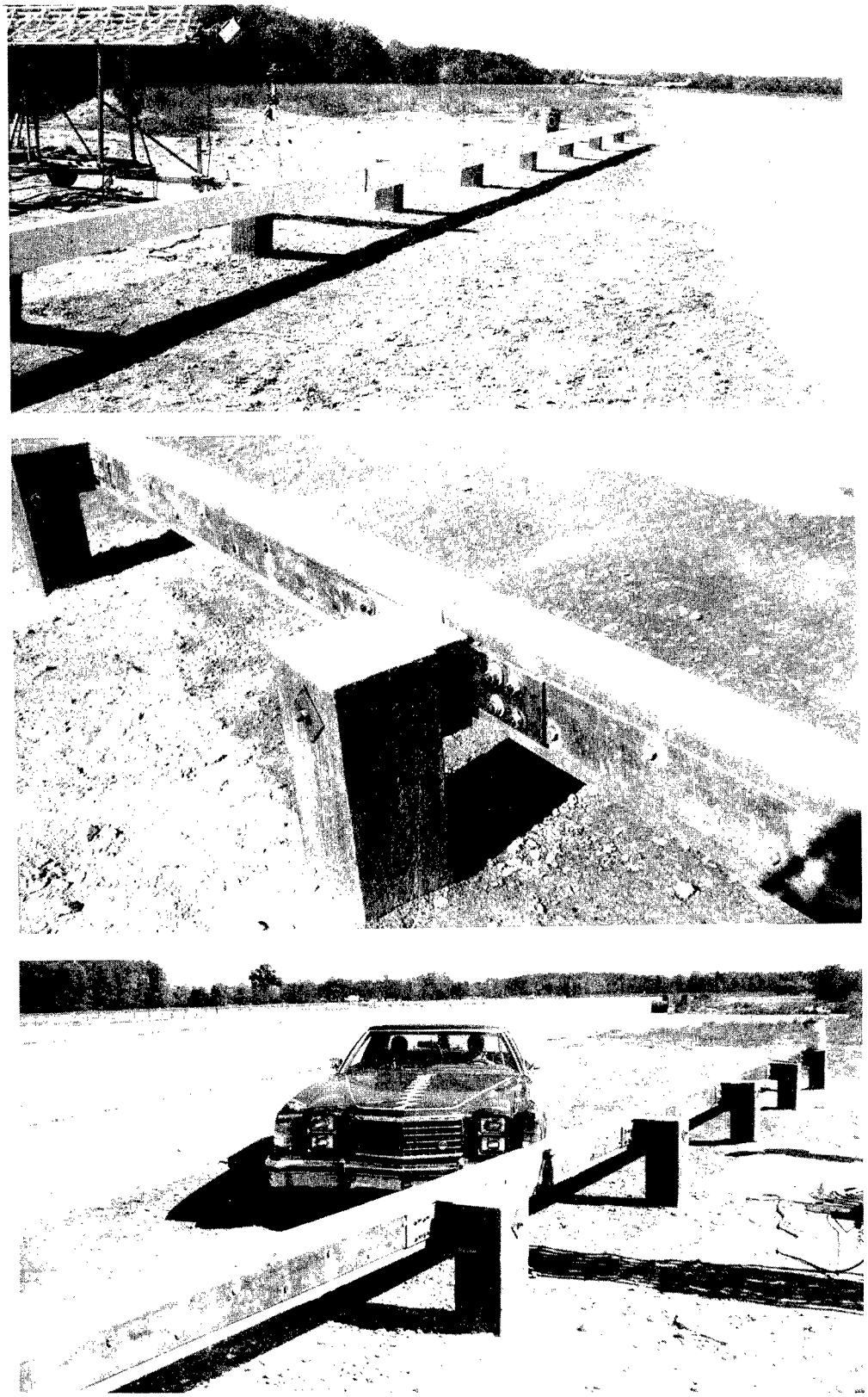

Figure 52. Pretest photographs of guardrail system, test 1818-5-6-87.

vehicle weight was 4500 ± 300 lb (2043 ± 136 kg). The gross weight of the vehicle was 4654 lb (2113 kg).

X-, y- and z-axis accelerometers were mounted in the car along with roll and yaw rate gyros. Two fully-instrumented dummies were placed in the vehicle in the driver seat, unrestrained and in the passenger seat, restrained. The dummy instrumentation consisted of x-, y- and z-axis accelerometers in the head and chest and load cells in the legs. Pretest photographs of the test vehicle are shown in figure 53.

c. Impact Description

Review of the high-speed movie films, fifth wheel and speed trap data indicated that the test vehicle impacted at 62.4 mi/h (27.9 m/s) and 24.4 degrees. This review also indicated that the left corner of the vehicle impacted the rail at the desired point.

During the crush of the vehicle left front fender, posts 5 and 6 pushed back allowing the vehicle tire to ride under the rail. The car pocketed the fifth rail and snapped the timber rail (but not the steel backup plate) approximately 4 ft (1.22 m) from post 6. The left front tire grazed post 6 and sheared off 0.5 in (0.013 m) of wood material. Due to the considerable pocketing of the rail, the vehicle was redirected at an angle of 10 degrees. The vehicle remained in contact with the rail for 25 ft (7.6 m) before the vehicle was redirected from the system. The vehicle continued past the end of the system and came to rest 50 ft (15.3 m) from the end of the system.

Tire marks were found on the underside of rails 4 and 5 and on the front face of posts 5 and 6.

After the test, the static rail height was 31 in (0.79 m) at post 5 and 32 in (0.81 m) at post 6. The rail was lifted 4 to 5 in (0.10 to 0.13 m) when the posts pushed back and the vehicle tire rode under the rail.

Inside the vehicle, it was observed that the unrestrained driver's head collided with the outside edge of the A-pillar. The restrained passenger did not impact the windshield.

A summary of the test conditions and results is given in figure 54. Data analysis was performed and the vehicle x-axis and y-axis, 100 Hz acceleration traces are shown in figure 55.

d. Dummy Data Analysis

Dummy data analysis was performed. The dummy data was digitized at 8000 Hz and processed to computed the required parameters. Table 16 lists the dummy head, chest and femur parameters. During the test, the passenger dummy cable broke and no passenger data values are reported.

Figure 53. Pretest photographs of test vehicle, test 1818-5-6-87.

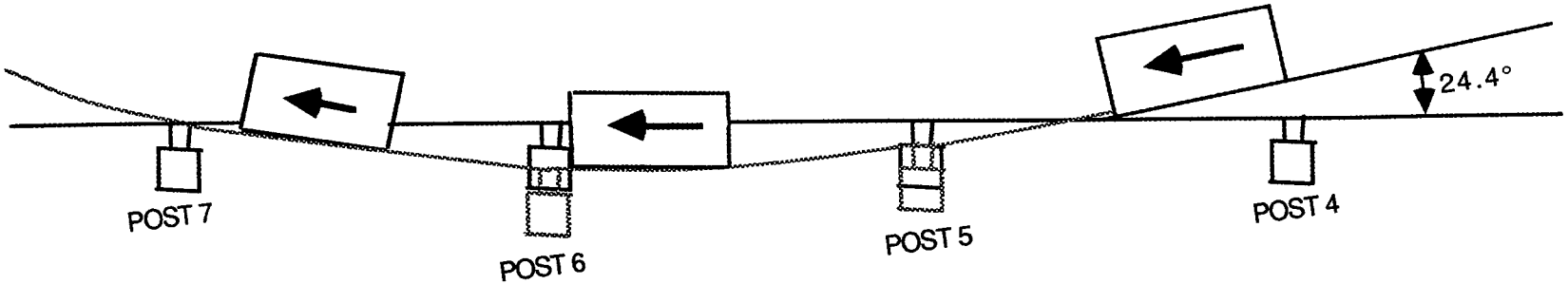

Date: 26 October 1987
Weather: Partly Sunny 85° F

Test Vehicle: 1978 Ford LTD II

Device Configuration: Blocked-out, steel-backed wood guardrail, 90 ft long, 27 in high. 10-in by 12-in by 7-ft posts. 6-in by 10-in by 10-ft rails. 4-in by 9-in by 12-in blockouts. 3-ft, 6-in splice plates, 4 bolt splice to rail attachment, single bolt rail attachment to post.

1. Vehicle Weight:

	Test Inertial	Gross
Planned:	4500 ± 200	4500 ± 300
Actual:	4309	4654

2. Number of Occupants: Two

3. Occupant Model: Anthropomorphic Dummy, 50th percentile, male

4. Occupant Location: Driver Seat, Unrestrained
Passenger Seat, Restrained

5. Impact:

	Speed	Angle (a)	Location
Planned:	60.0 mi/h	25°	Midspan, posts 4 and 5
Actual:	62.4 mi/h	24.4°	Midspan, posts 4 and 5

6. Redirection Angle: 10 degrees

7. Redirection Speed: 26.1 mi/h (38.3 ft/s)

8. Total Speed Change: 36.3 mi/h (53.2 ft/s)

9. Total Momentum Change: 7689 lb-s

10. Vehicle Damage Index: (SAE J224a) 11LFMW3

11. NCHRP 230 Test Number: 10

12. Impact Severity:

$\frac{m(V \sin a)^2}{2}$ 95.6 kip-ft
(Spec: 88 to 114 kip-ft)

13. Vehicle Analysis:

	Observed	Design/ Limit Value
NCHRP 230:		
Longitudinal:		
Delta-V at 2 ft:	-26.7 ft/s	30/40 ft/s
Ridedown Acceleration:	-12.8 g's	15/20 g's
Delta-V at 2.08 ft (driver and passenger actual):	-27.9 ft/s	30/40 ft/s
Ridedown Acceleration:	-12.8 g's	15/20 g's
Lateral:		
Delta-V at 1 ft:	-18.3 ft/s	20/30 ft/s
Ridedown Acceleration:	-11.6 g's	15/20 g's
Delta-V at 0.83 ft (driver and passenger actual):	-15.2 ft/s	20/30 ft/s
Ridedown Acceleration:	-11.6 g's	15/20 g's
TRC 191:		
Peak 50 ms acceleration:		
Longitudinal:	-7.9 g's	
Lateral:	-5.5 g's	

14. Test Results Conclusion: Vehicle was redirected by the rail at 26.1 mi/h and 10 degrees. Because the vehicle did not intrude or come to rest in the adjacent traffic lanes, the vehicle slowdown criteria does not apply.

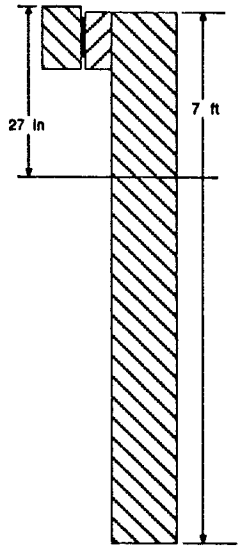

1 mi/h = 0.45 m/s
1 mi = 1609 m
1 in = 0.03 m
1 kip = 4450 N
1 ft = 0.30 m
1 kip-ft = 1355 N-m
1 lb = 0.45 kg
1 ft/s = 0.30 m/s
1 'g' = 32.2 ft/s^2 = 9.8 m/s^2
1 lb-sec = 4.45 N-s

Figure 54. Test summary, test 1818-5-6-87.

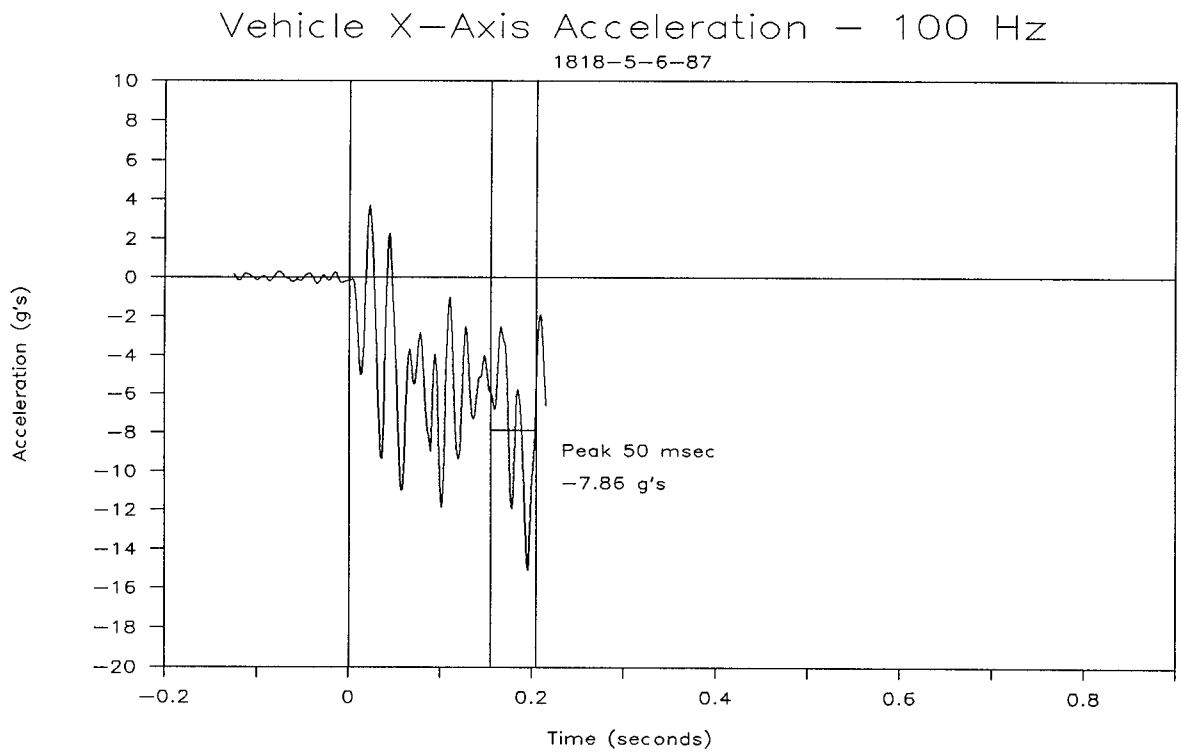

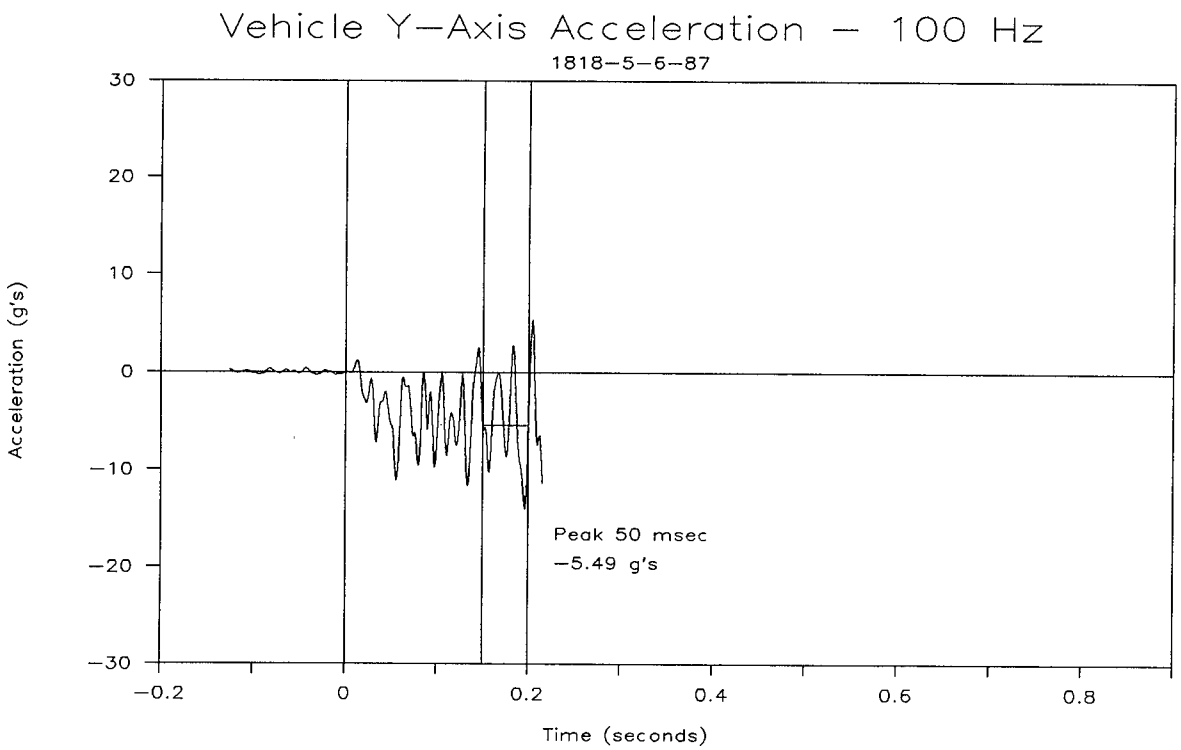

Figure 55. Vehicle acceleration, test 1818-5-6-87.

Table 16. Dummy parameters, test 1818-5-6-87.

	Driver	Passenger
Head		
HIC	214	n/a
Start time	0.137125	n/a
End time	0.267125	n/a
Time duration	0.130000	n/a
Chest		
CSI	130	n/a
0.003 s Chest Acceleration	22.4	n/a
Time	0.141000	n/a
Femur		
Right Load	291	n/a
Left Load	1087	n/a

e. Vehicle Damage

Vehicle damage occurred mainly to the left front fender, grill bumper, and suspension/steering. The front left wheel was damaged from post snagging causing the tire to deflate. The driver side door was wedged outward. The windshield and the drivers side window glass were shattered. Posttest photographs of the vehicle are shown in figure 56.

f. Guardrail Damage

Damage to the guardrail system was minimal. The 6 in by 10 in (0.15 m by 0.25 m) timber part of the fifth rail snapped due to pocketing of the vehicle. There was a 16 in (0.41 m) long crack at the trailing end of rail 4. This crack was mostly cosmetic. A 0.5-in (0.013-m) strip of wood was torn off the front corner of post 6. The blockout of post 6 was cracked throughout its entire length. Posttest photographs of the guardrail are shown in figure 57.

7. TEST 1818-7-88

a. Test Device

The test device was an artificial stone, precast concrete median barrier. The barrier was 27 in (0.69 m) high with a 1-in (0.03-m) capstone overhang. The barrier was 100 ft (30 m) long, consisting of 10 10-ft (3.0-m) sections. The sections were cast by MG Architectural Products. The sections were placed on a 6-in (0.15-m) layer of packed crusher run. Two of the sections

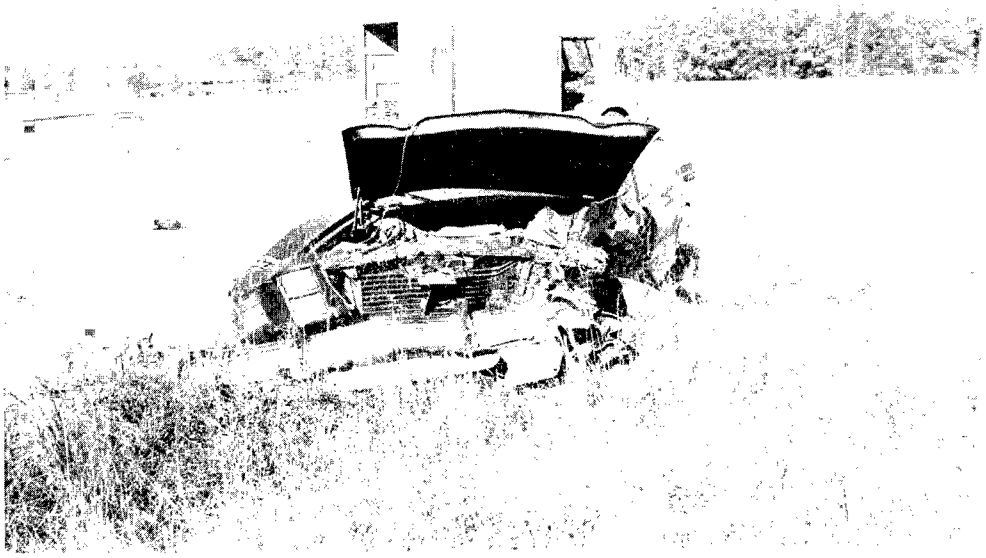

Figure 56. Posttest photographs of test vehicle, test 1818-5-6-87.

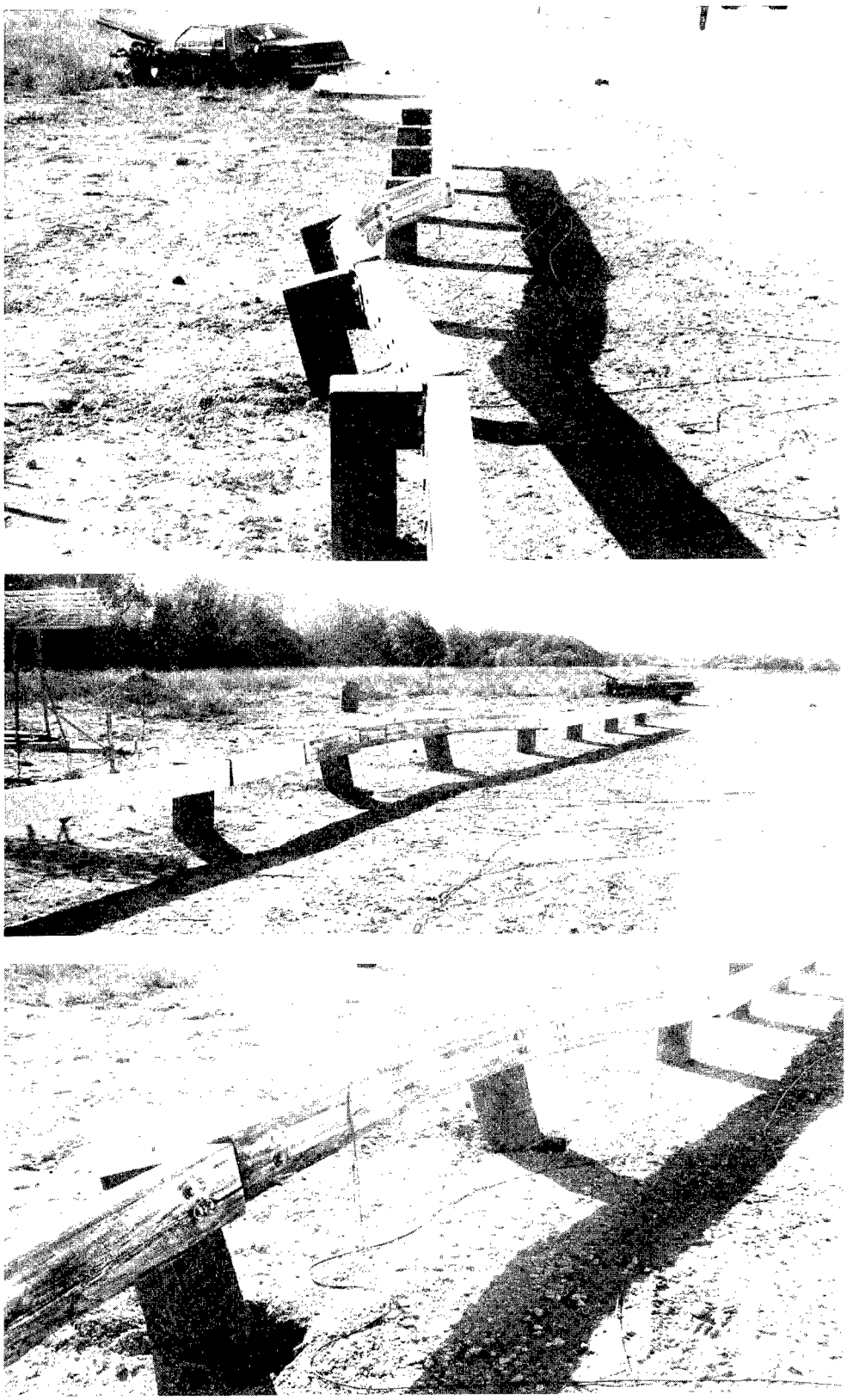

Figure 57. Posttest photographs of guardrail system, test 1818-5-6-87.

featured the original square keyway design while the rest had the current round pin and socket design. The sections were shaped like an upside-down T with a base that was 3.5 ft (1.07 m) wide and 1 ft (0.30 m) thick. The stone-like part of the barrier rose 27 in (0.69 m) above the base.

A 3.5-in (0.09-m) mountable curb and gutter and a shoulder was installed for this test. From the roadway, there was 13 ft (4.0 m) of a 2 percent downslope leading into the 2.5-ft (0.76-m) wide, 3.5-in (0.09-m) high mountable curb and gutter. Between the curb and face of the wall was 10.5 ft (3.2 m) of a 2 percent upslope.

Figure 58 shows the test site and test device. Figure 59 shows a detailed drawing of the test device. Figure 60 shows pretest photographs of the median barrier system.

b. Test Vehicle

The test vehicle was a 1982 Honda Civic. The target inertial vehicle weight was 1800 ± 50 lb (817 ± 23 kg). The inertial weight of the vehicle was 1796 lb (815 kg). The target gross vehicle weight was 1950 ± 50 lb (885 ± 23 kg). The gross weight of the vehicle was 1958 lb (889 kg).

X-, y- and z-axis accelerometers were mounted in the car along with roll and yaw rate gyros. One uninstrumented dummy was placed in the vehicle in the driver seat, restrained. Pretest photographs of the test vehicle are shown in figure 61.

c. Impact Description

Review of the high-speed films, fifth wheel data and speed trap data indicated that the test vehicle impacted the barrier at 61.3 mi/h (27.4 m/s) and 21 degrees. This review also indicated that the left corner of the vehicle impacted the median barrier approximately 3 ft (0.92 m) upstream of the straight line impact path. This occurred because the curb caused the vehicle to turn slightly.

Prior to impact, the vehicle rolled slightly while traversing the shoulder, curb and gutter.

Upon impact, the front of the vehicle was deformed and pushed inward. The left front of the vehicle continued to crush until the vehicle A-pillar contacted the barrier. The vehicle the yawed around and exited the wall. The vehicle remained in contact with the wall for approximately 15 ft (4.6 m). The vehicle was redirected at 41.0 mi/h (18.3 m/s) and 5 degrees. After exiting the wall, the vehicle rolled toward the driver side and pitched downward. The vehicle came to rest 150 ft (46 m) downstream of the impact point, 3 ft (0.92 m) behind the line of the barrier.

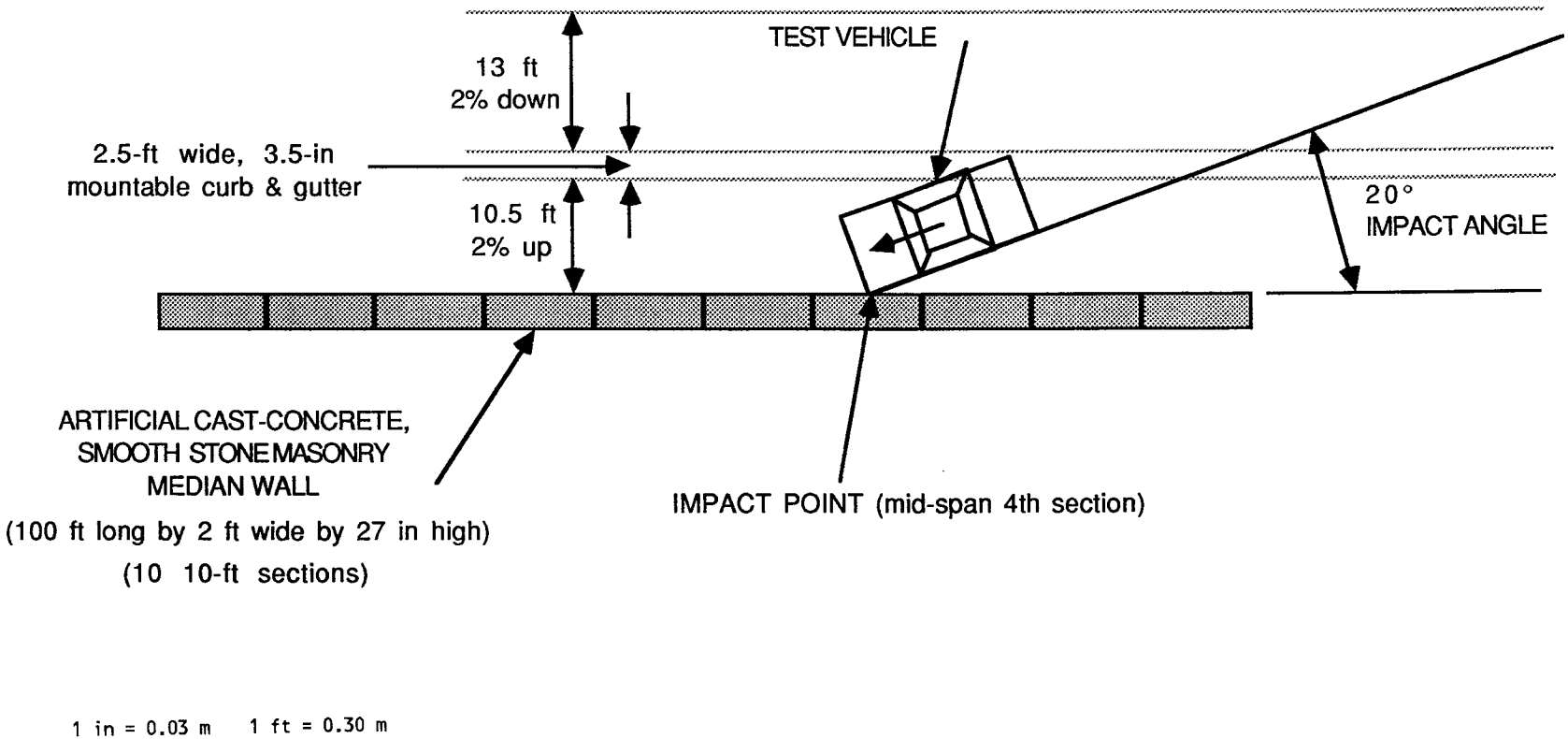

Figure 58. Test site layout, test 1818-7-88.

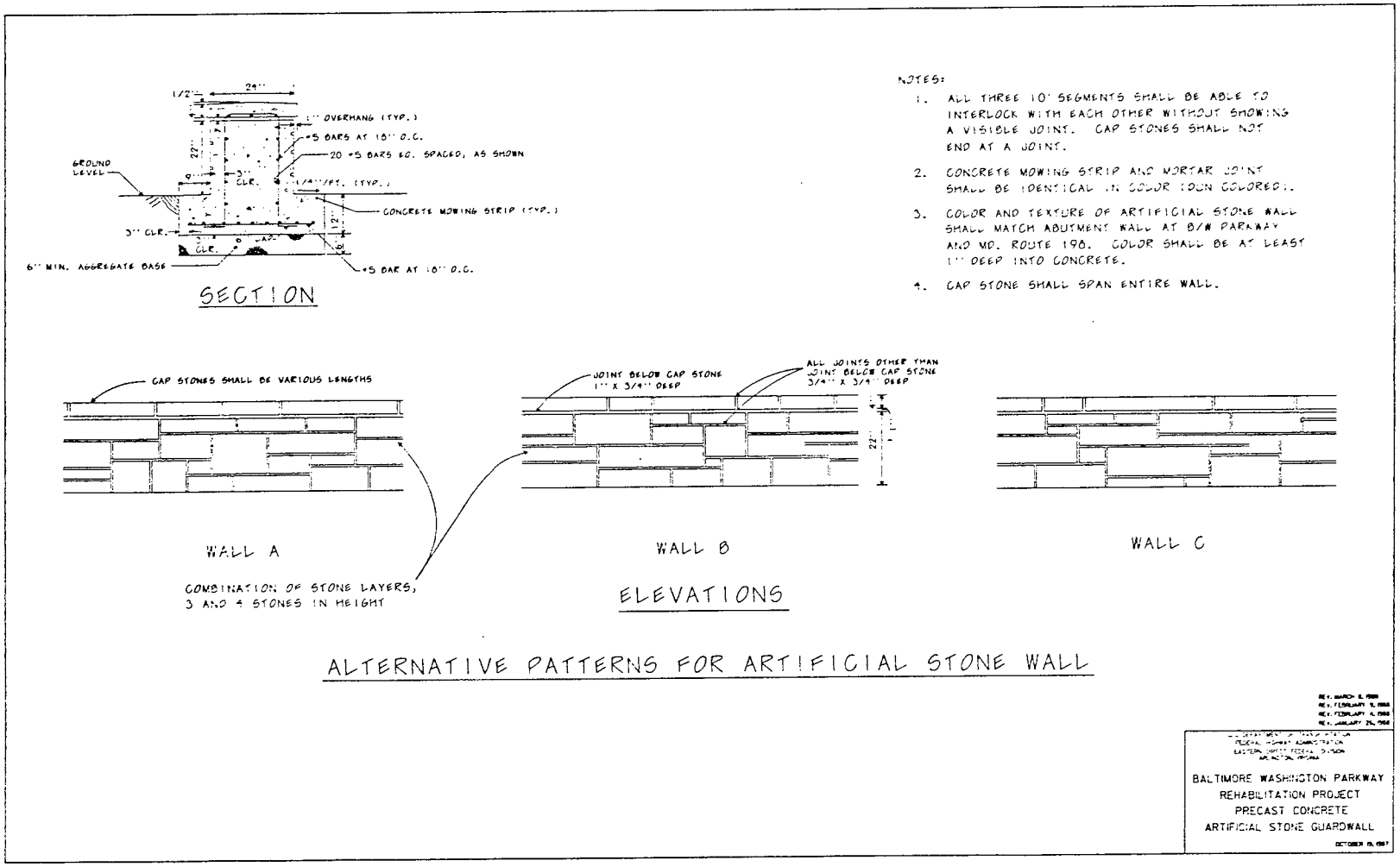

1 in = 0.03 m 1 ft = 0.30 m

Figure 59. Test device, test 1818-7-88.

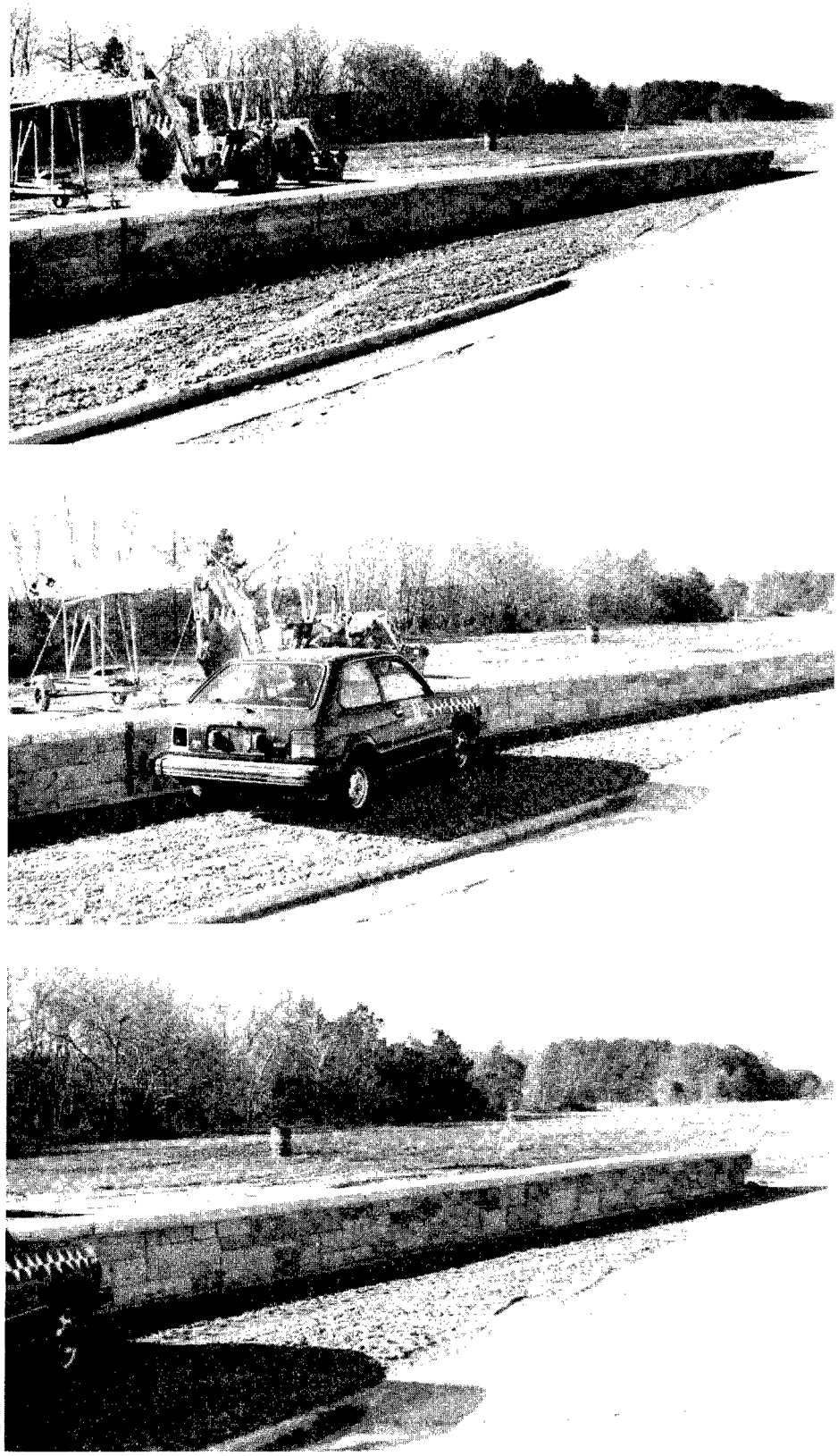

Figure 60. Pretest photographs of median barrier system, test 1818-7-88.

Figure 61. Pretest photographs of test vehicle, test 1818-7-88.

Inside the vehicle, it was observed that the dummy hit the driver side window but remained in its seat. The dummy came to rest upright.

A summary of the test conditions and results is given in figure 62. Data analysis was performed and the vehicle x-axis and y-axis, 100 Hz acceleration traces are shown in figure 63.

d. Vehicle Damage

Vehicle damage occurred mainly to the left side and front of the car. The left front fender, grill, bumper, drivers door, vehicle steering suspension were damaged significantly. Posttest photographs of the vehicle are shown in figure 64.

e. Median Barrier Damage

This barrier performed well. The vehicle was redirected. Some light marring of the concrete occurred at the impact point. The barrier showed no permanent deformation. Posttest photographs of the median barrier are shown in figure 65.

8. TEST 1818-8-88

a. Test Device

The test device was a blocked-out, steel-backed wood guardrail system. This system was previously evaluated with a full-sized vehicle impacting at 60 mi/h (26.8 m/s) and 25 degrees in test 1818-5-6-87. The rail backing plates were attached to the rail with 12 0.625-in (0.016-m) lag screws. The ends of the rails were through-bolted to a 3-ft by 6-in by 0.375-in (0.66-m by 0.15-m by 0.010-m) splice plate with five 0.625-in (0.016-m) carriage bolts. The splice plate was bolted to the post with one 0.625-in (0.016-m) carriage bolt. A 4.75-in (0.12-m) plate washer was used on the backside of the splice plate bolt. The washer was set into a 5-in (0.13-m) diameter, 1.5-in (0.04-m) deep recess. The rail height was 27 in (0.69 m) and the post was embedded 58 in (1.47 m).

Figure 66 shows the test site and test device. Figure 67 shows a detailed drawing of the guardrail system. Figure 68 shows pretest photographs of the guardrail system.

b. Test Vehicle

The test vehicle was a 1982 Honda Civic. The target inertial vehicle weight was 1800 ± 50 lb (817 ± 23 kg). The inertial weight of the vehicle was 1812 lb (823 kg). The target gross vehicle weight was 1950 ± 50 lb (885 ± 23 kg). The gross weight of the vehicle was 1994 lb (905 kg).

X-, y- and z-axis accelerometers were mounted in the car along with roll and yaw rate gyros. One uninstrumented dummy was

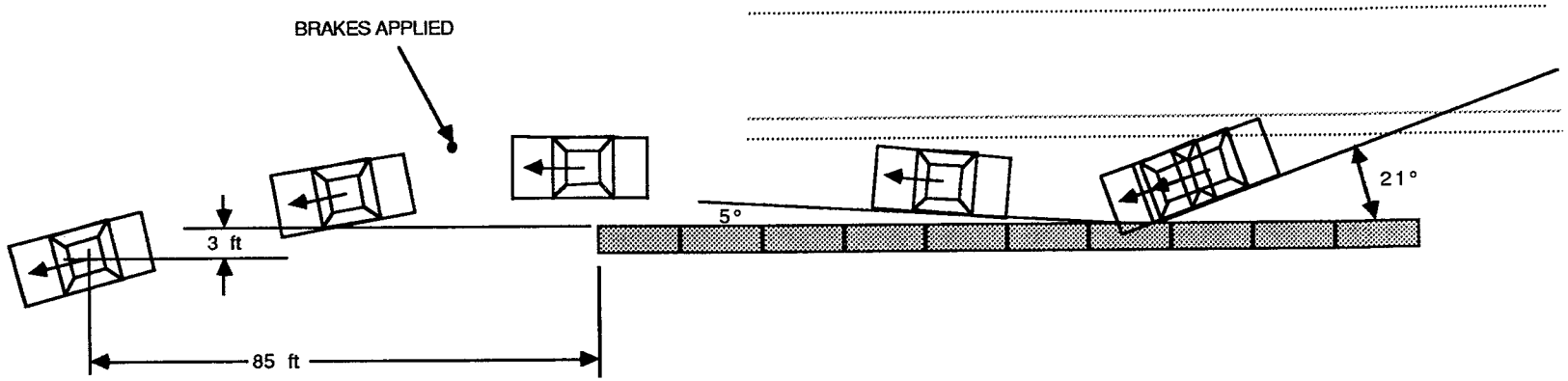

Date: 1 December 1988
Weather: Clear, 40° F

Test Vehicle: 1982 Honda Civic

Device Configuration: Artificial, Cast-concrete, Smooth-Stone Median Barrier, 100 ft long, 27 in high, 1-in capstone overhang. 10 10-ft sections, round pin and socket keyway design. Set on foundation of packed crusher run type soil.

1. Vehicle Weight:

	Test Inertial	Gross
Planned:	1800 ± 50	1950 ± 50
Actual:	1796	1958

2. Number of Occupants: One

3. Occupant Model: Anthropomorphic Dummy, 50th percentile, male

4. Occupant Location: Driver Seat, Restrained

5. Impact:

	Speed	Angle (a)	Location
Planned:	60.0 mi/h	20°	Midspan, section 4
Actual:	61.3 mi/h	21°	3 ft upstream of desired point

6. Redirection Angle: 5 degrees

7. Redirection Speed: 41.0 mi/h (60.1 ft/s)

8. Total Speed Change: 20.3 mi/h (29.8 ft/s)

9. Total Momentum Change: 1812 lb-s

10. Vehicle Damage Index: (SAE J224a) 11LFEW3

11. NCHRP 230 Test Number: S13

12. Impact Severity:

$\frac{m(V \sin a)^2}{2}$ 29.0 kip-ft (Spec: 23 to 29 kip-ft)

13. Vehicle Analysis:

	Observed	Design/ Limit Value
NCHRP 230:		
Longitudinal:		
Delta-V at 2 ft:	-24.8 ft/s	30/40 ft/s
Ridedown Acceleration:	-2.8 g's	15/20 g's
Delta-V at 1.75 ft (actual):	-24.3 ft/s	30/40 ft/s
Ridedown Acceleration:	-2.8 g's	15/20 g's
Lateral:		
Delta-V at 1 ft:	-30.3 ft/s	20/30 ft/s
Ridedown Acceleration:	-6.0 g's	15/20 g's
Delta-V at 0.54 ft (actual):	-25.6 ft/s	20/30 ft/s
Ridedown Acceleration:	-12.0 g's	15/20 g's
TRC 191:		
Peak 50 ms acceleration:		
Longitudinal:	-12.3 g's	
Lateral:	-16.3 g's	

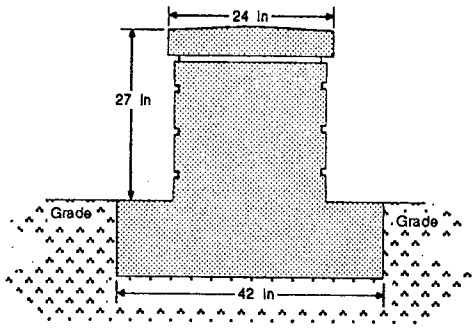

14. Test Results Conclusion: Vehicle was redirected by the wall at 41.0 mi/h and 5 degrees. Because the vehicle did not intrude or come to rest in the adjacent traffic lanes, the vehicle slowdown criteria does not apply.

1 mi/h = 0.45 m/s
1 mi = 1609 m
1 in = 0.03 m
1 kip = 4450 N
1 ft = 0.30 m
1 kip-ft = 1355 N·m
1 lb = 0.45 kg
1 ft/s = 0.30 m/s
1 'g' = 32.2 ft/s^2 = 9.8 m/s^2
1 lb-sec = 4.45 N·s

Figure 62. Test summary, test 1818-7-88.

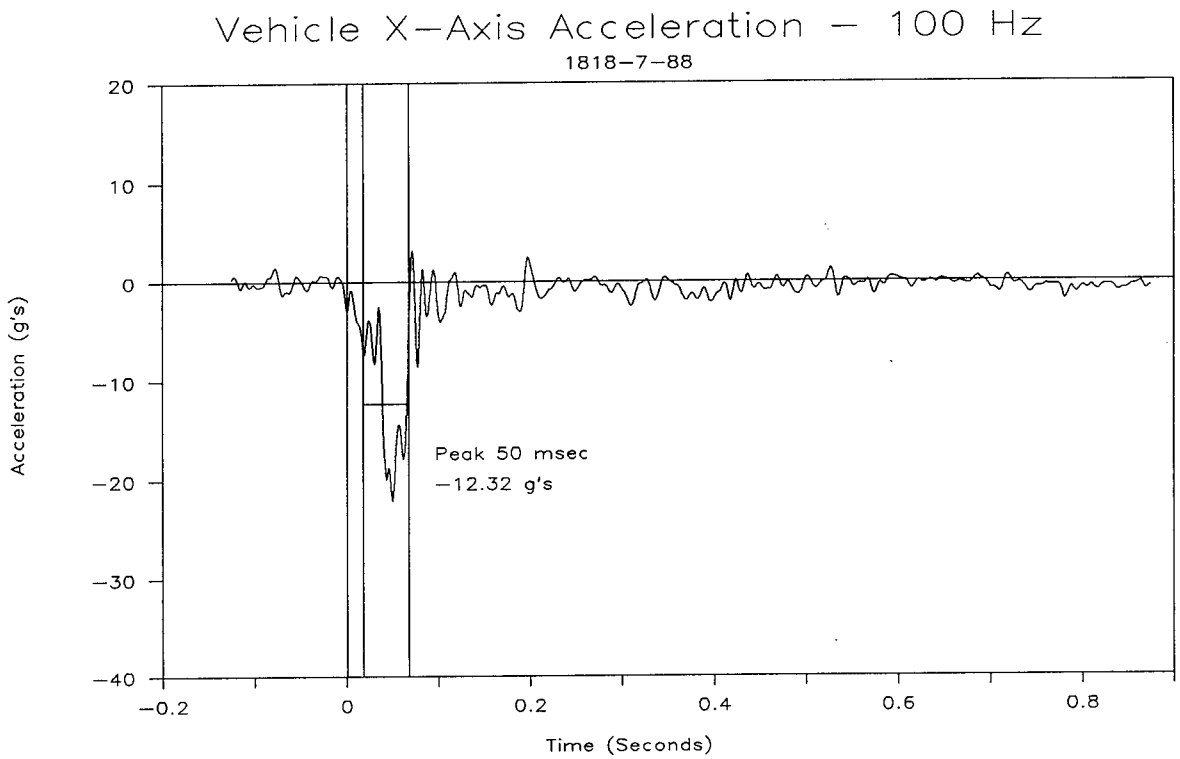

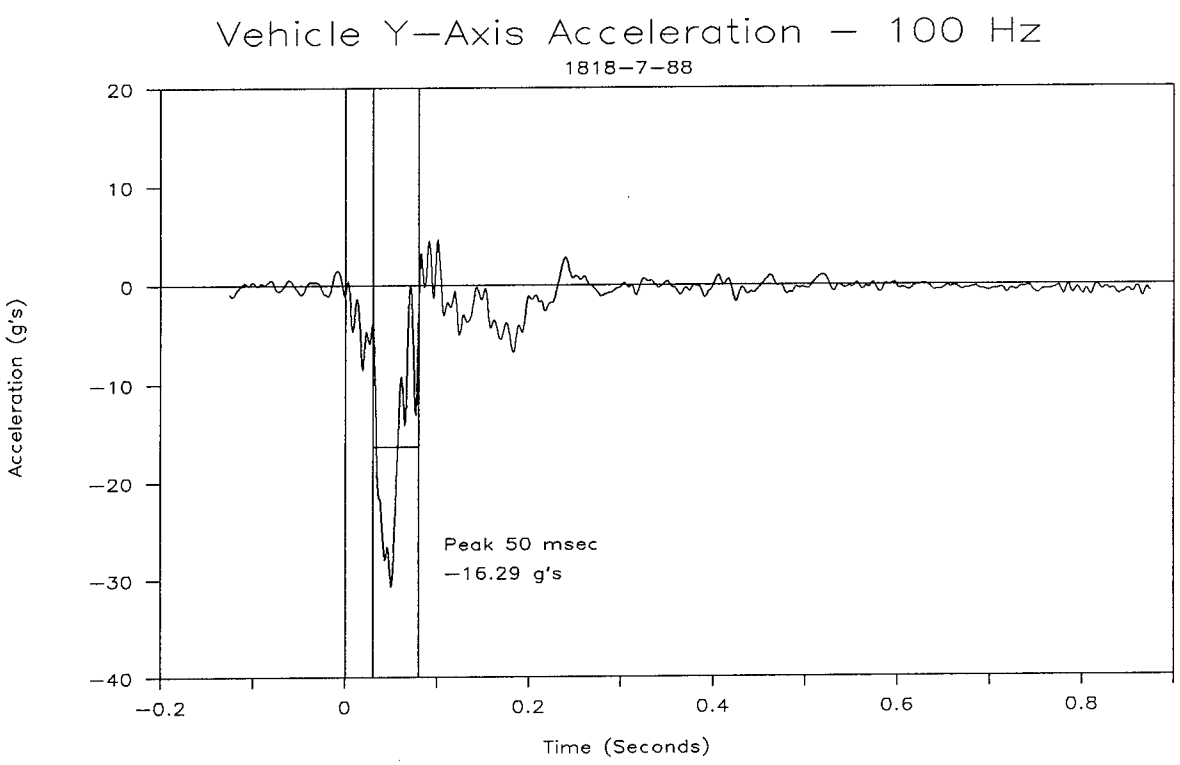

Figure 63. Vehicle acceleration, test 1818-7-88.

Figure 64. Posttest photographs of test vehicle, test 1818-7-88.

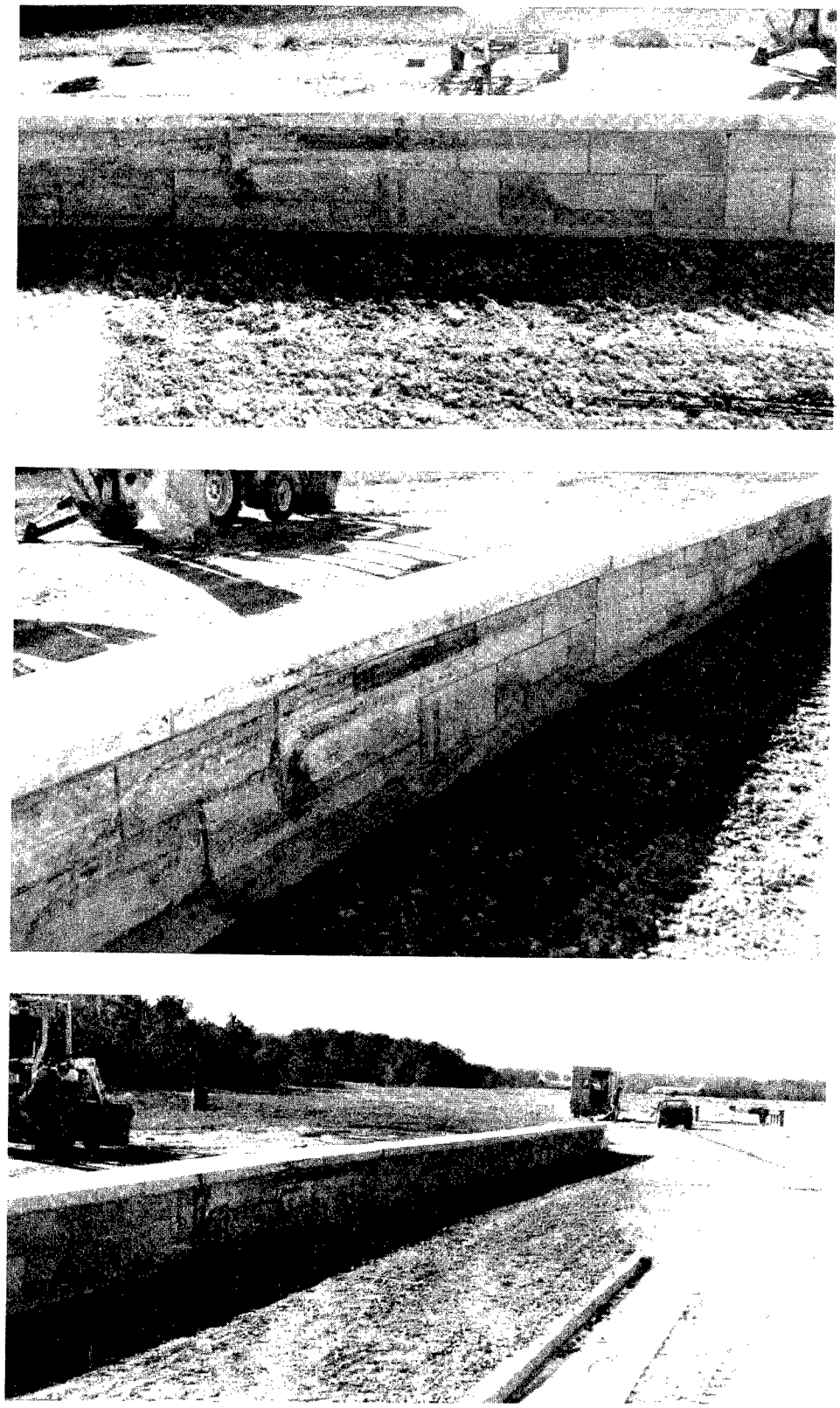

Figure 65. Posttest photographs of median barrier system, test 1818-7-88.

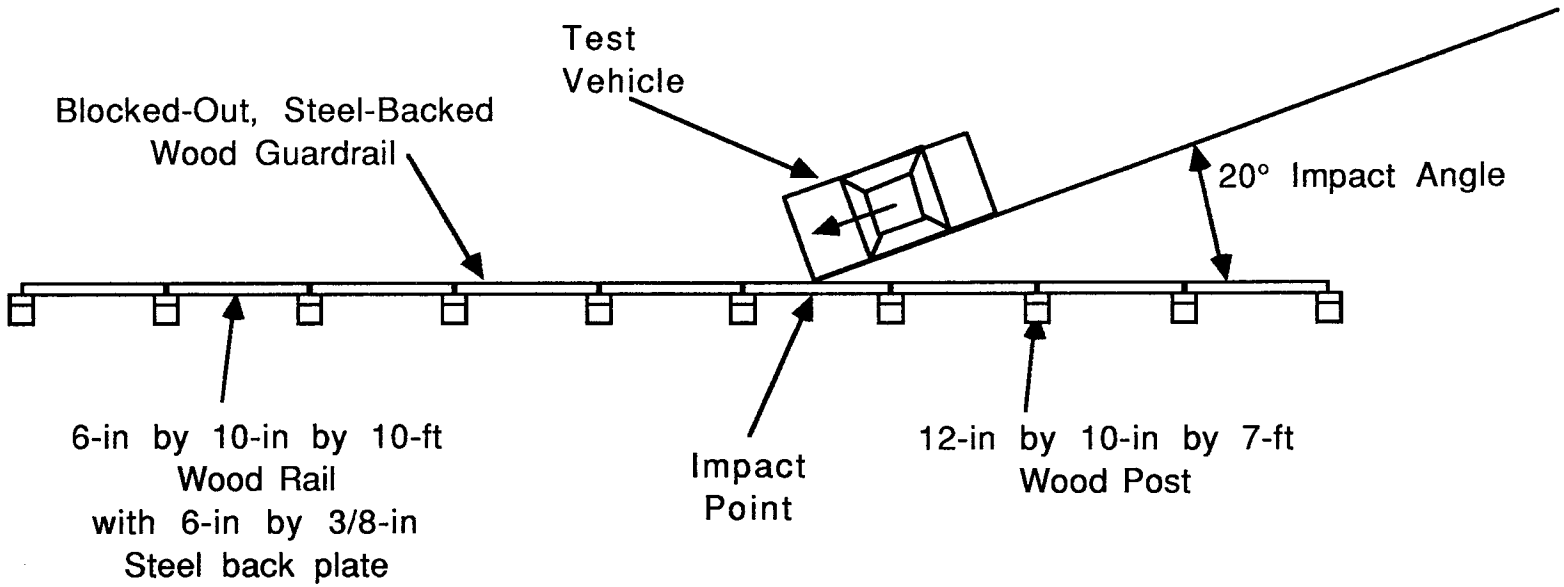

Design also features:
4-in by 9-in by 12-in blockout between post and splice plate
6-in by 3-ft by 3/8-in splice plate
Single bolt splice plate attachment
5 bolt per rail-end attachment to splice plate
4.75-in diameter plate washer in 1.5-in recess at rear of post

1 in = 0.03 m 1 ft = 0.30 m

Figure 66. Test site layout, test 1818-8-88.

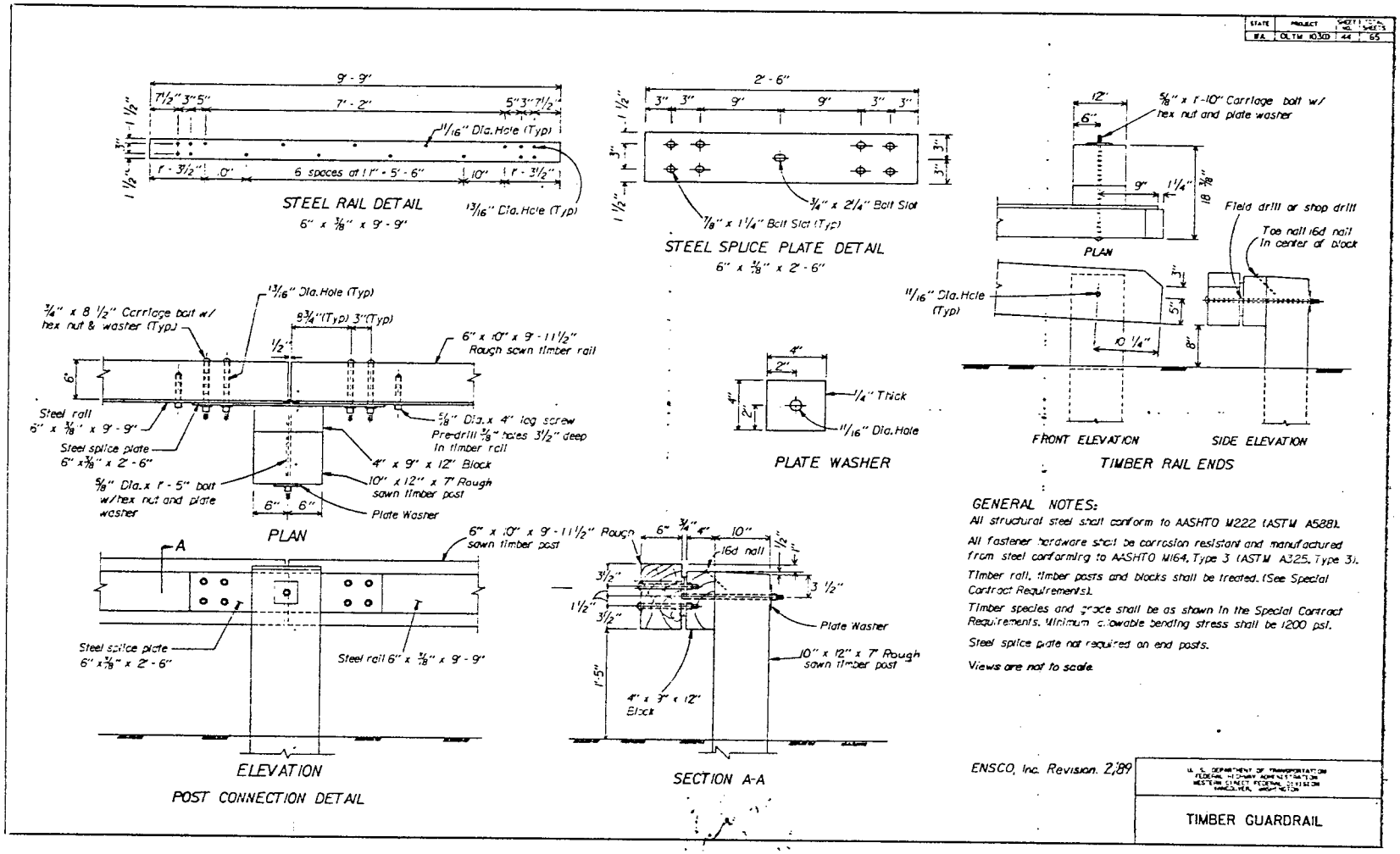

1 in = 0.03 m 1 ft = 0.30 m

Figure 67. Test device, test 1818-8-88.

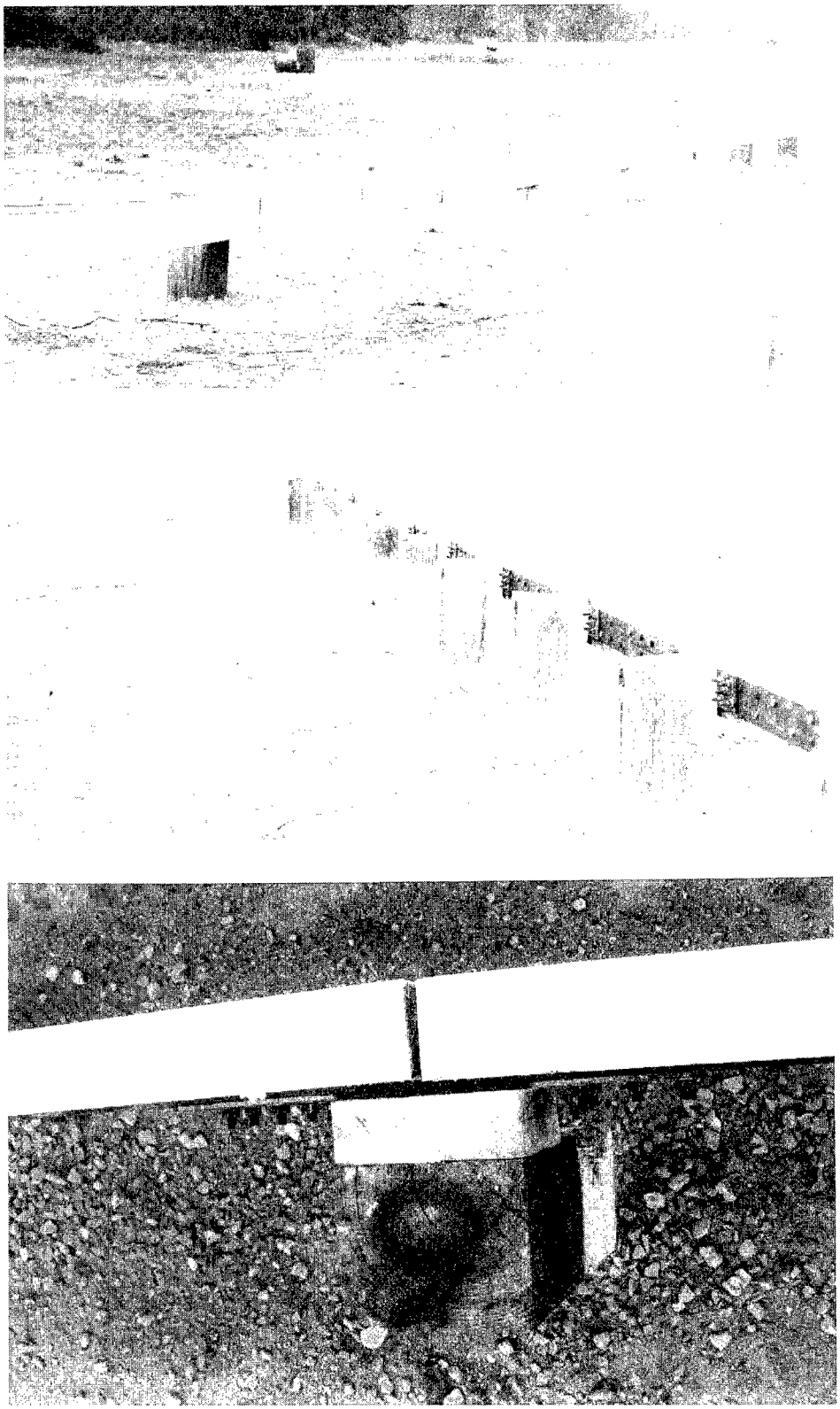

Figure 68. Pretest photographs of guardrail system, test 1818-8-88.

placed in the vehicle in the driver seat, restrained. Pretest photographs of the test vehicle are shown in figure 69.

c. Impact Description

Review of the high-speed films, fifth wheel data and speed trap data indicated that the test vehicle impacted the guardrail at 63.5 mi/h (28.4 m/s) and 20 degrees. This review also indicated that the left corner of the vehicle impacted the guardrail at the desired point.

Upon impact, the front of the vehicle was deformed and pushed inward. The left front of the vehicle continued to crush until the vehicle A-pillar contacted the guardrail. The vehicle yawed around and began to exit the rail. The vehicle remained in contact with the rail for approximately 20 ft (6.1 m). The vehicle rode under the rail for approximately 18 ft (5.5 m) , beginning 2 ft (0.61 m) past impact. The front face of the rail showed contact for 15 ft (4.6 m) beginning at impact. There was tire scrub on posts 5 and 6. The vehicle was redirected at 37.8 mi/h (16.9 m/s) and 5.5 degrees. After exiting the rail, the vehicle began to yaw counterclockwise as it continued downstream. The vehicle came to rest 115 ft (35 m) downstream of the impact point, 3 ft (0.92 m) behind the line of the guardrail after yawing approximately 105 degrees in reference to the rail.

Inside the vehicle, it was observed that the dummy broke the driver side window. The dummy then fell into the passenger seat and came to rest in its seatbelt leaning into the passenger seat.

A summary of the test conditions and results is given in figure 70. Data analysis was performed and the vehicle x-axis and y-axis, 100 Hz acceleration traces are shown in figure 71.

d. Vehicle Damage

Vehicle damage occurred mainly to the left side of the car. The left front fender, grill, bumper, and drivers door were damaged significantly. Posttest photographs of the vehicle are shown in figure 72.

e. Guardrail Damage

This guardrail performed well. The vehicle was redirected. There was tire scrub on the front of post 5 and the front and side of post 6. Post 6 was impacted by the vehicle front wheel. The bottom of the rail showed tire scrub for 18 ft (5.5 m) (from 2 ft (0.61 m) past impact to midspan of rail 6). The rail at post 5 was pushed back approximately 8 in (0.20 m) dynamically and 5 in (0.13 m) statically and was pushed up approximately 5 in (0.13 m) dynamically and 2.5 in (0.06 m) statically. A portion of the push back and lift were actually rail and splice twist. Posttest photographs of the guardrail are shown in figure 73.

Figure 69. Pretest photographs of test vehicle, test 1818-8-88.

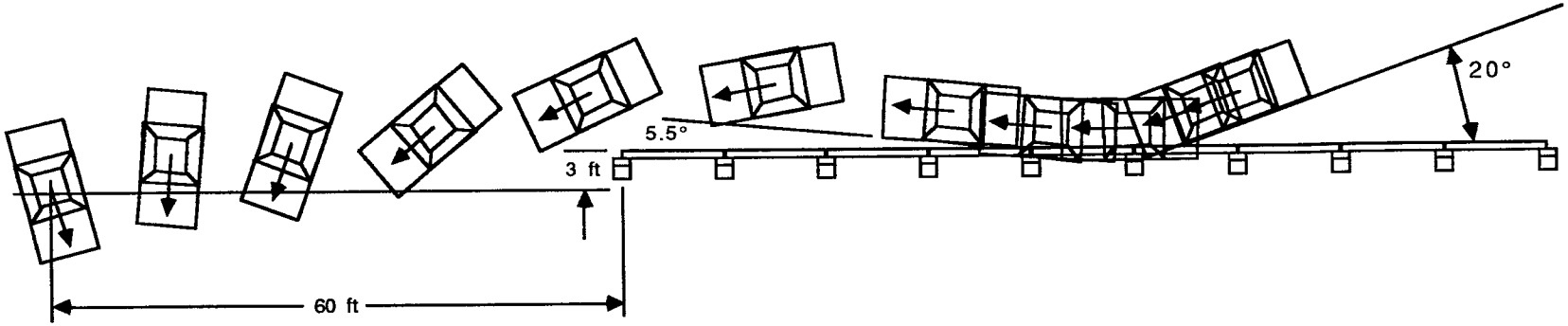

Date:	21 December 1988
Weather:	Overcast 60° F
Test Vehicle:	1982 Honda Civic
Device Configuration:	Blocked-out, steel-backed wood guardrail, 90 ft long, 27 in high. 10-in by 12-in by 7-ft posts. 6-in by 10-in by 10-ft rails. 4-in by 9-in by 12-in blockouts. 3-ft splice plates, 5 bolt splice to rail attachment, single bolt rail attachment to post.

		Test Inertial	Gross
1.	Vehicle Weight:		
	Planned:	1800 ± 50	1950 ± 50
	Actual:	1812	1994

5.	Impact:	Speed	Angle (a)	Location
	Planned:	60.0 mi/h	20°	Midspan, posts 4 and 5
	Actual:	63.5 mi/h	20°	Midspan, posts 4 and 5

2.	Number of Occupants:	One
3.	Occupant Model:	Anthropomorphic Dummy, 50th percentile, male
4.	Occupant Location:	Driver Seat, Restrained
6.	Redirection Angle:	5.5 degrees
7.	Redirection Speed:	37.8 mi/h (55.5 ft/s)
8.	Total Speed Change:	25.7 mi/h (37.6 ft/s)
9.	Total Momentum Change:	2328 lb-s
10.	Vehicle Damage Index: (SAE J224a)	11LFEW2
11.	NCHRP 230 Test Number:	S13
12.	Impact Severity: $\frac{m(V \sin a)^2}{2}$	28.5 kip-ft (Spec: 23 to 29 kip-ft)

13. Vehicle Analysis:	Observed	Design/ Limit Value
NCHRP 230:		
Longitudinal:		
Delta-V at 2 ft:	-26.0 ft/s	30/40 ft/s
Ridedown Acceleration:	-7.4 g's	15/20 g's
Actual flail was 2.0 ft		
Lateral:		
Delta-V at 1 ft:	-21.4 ft/s	20/30 ft/s
Ridedown Acceleration:	-9.6 g's	15/20 g's
Delta-V at 0.75 ft (actual):	-18.6 ft/s	20/30 ft/s
Ridedown Acceleration:	-9.6 g's	15/20 g's
TRC 191:		
Peak 50 ms acceleration:		
Longitudinal:	-7.4 g's	
Lateral:	-8.8 g's	

14. Test Results Conclusion: Vehicle was redirected by the rail at 37.8 mi/h and 5.5 degrees. Because the vehicle did not intrude or come to rest in the adjacent traffic lanes, the vehicle slowdown criteria does not apply.

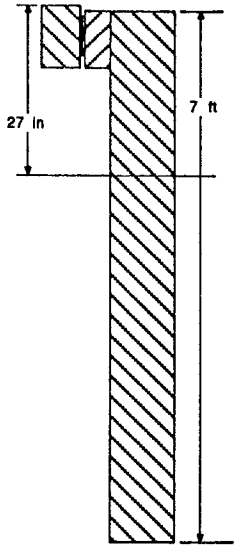

1 mi/h = 0.45 m/s
1 mi = 1609 m
1 in = 0.03 m
1 kip = 4450 N
1 ft = 0.30 m
1 kip-ft = 1355 N-m
1 lb = 0.45 kg
1 ft/s = 0.30 m/s
1 'g' = 32.2 ft/s^2 = 9.8 m/s^2
1 lb-sec = 4.45 N-s

Figure 70. Test summary, test 1818-8-88.

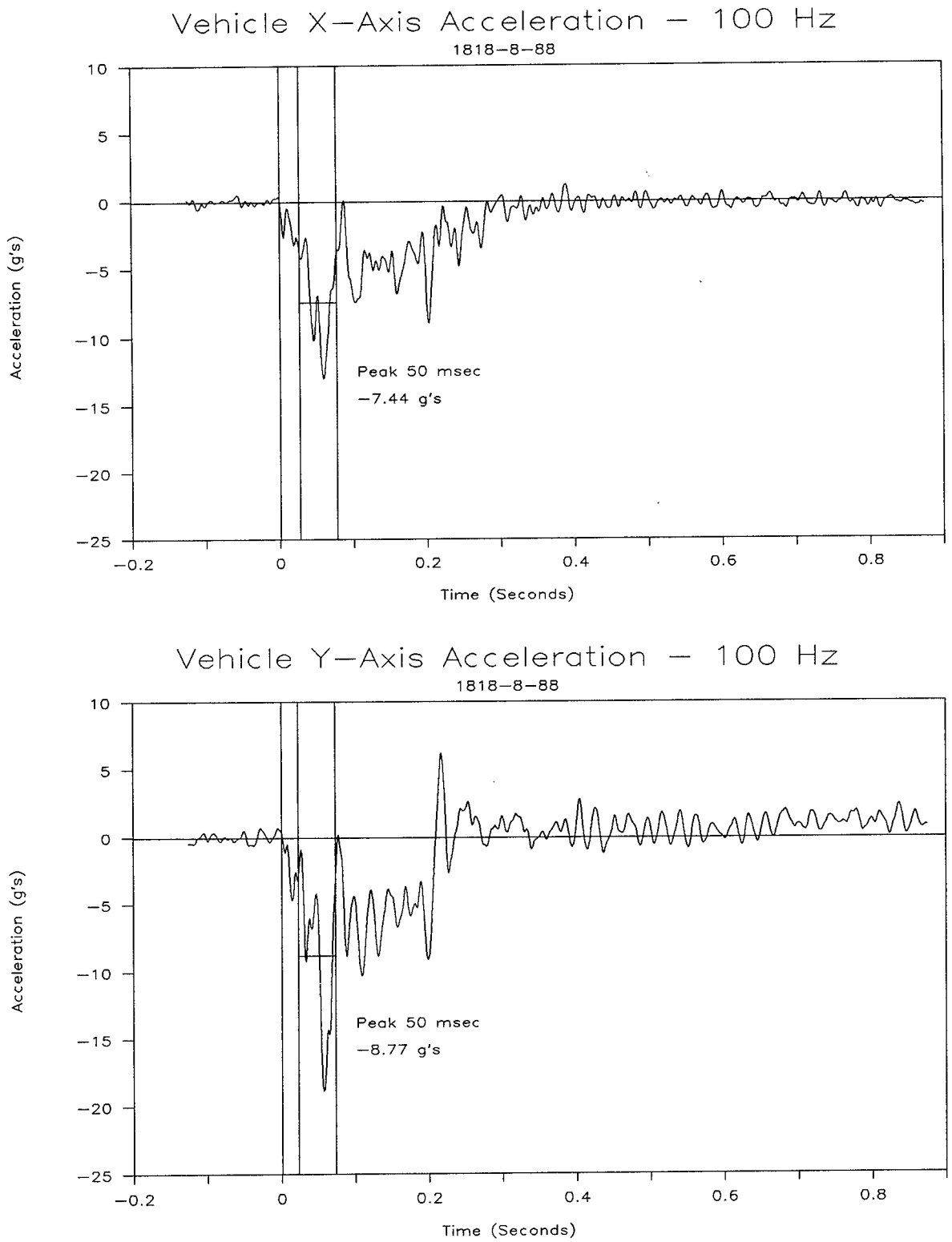

Figure 71. Vehicle acceleration, test 1818-8-88.

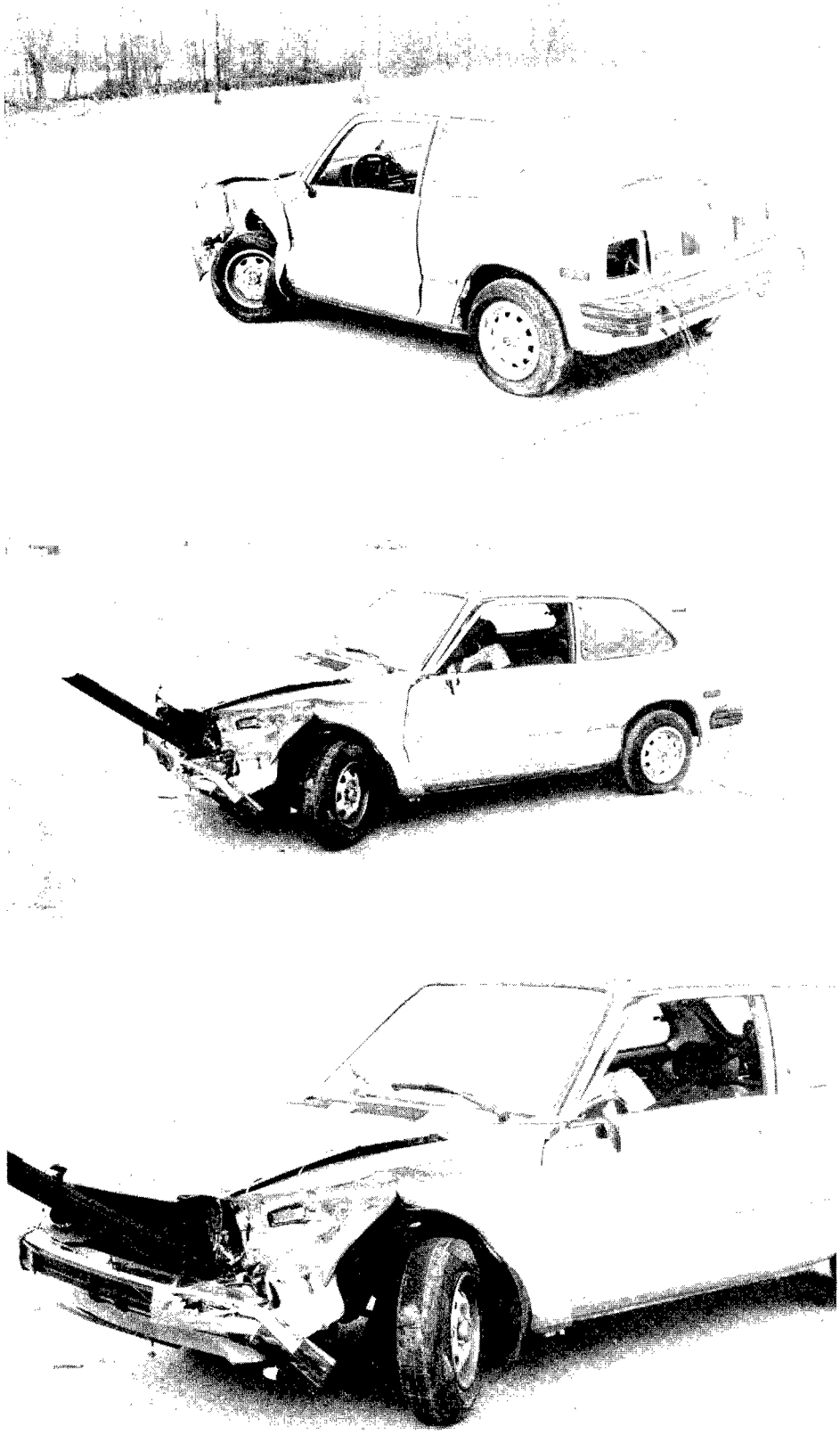

Figure 72. Posttest photographs of test vehicle, test 1818-8-88.

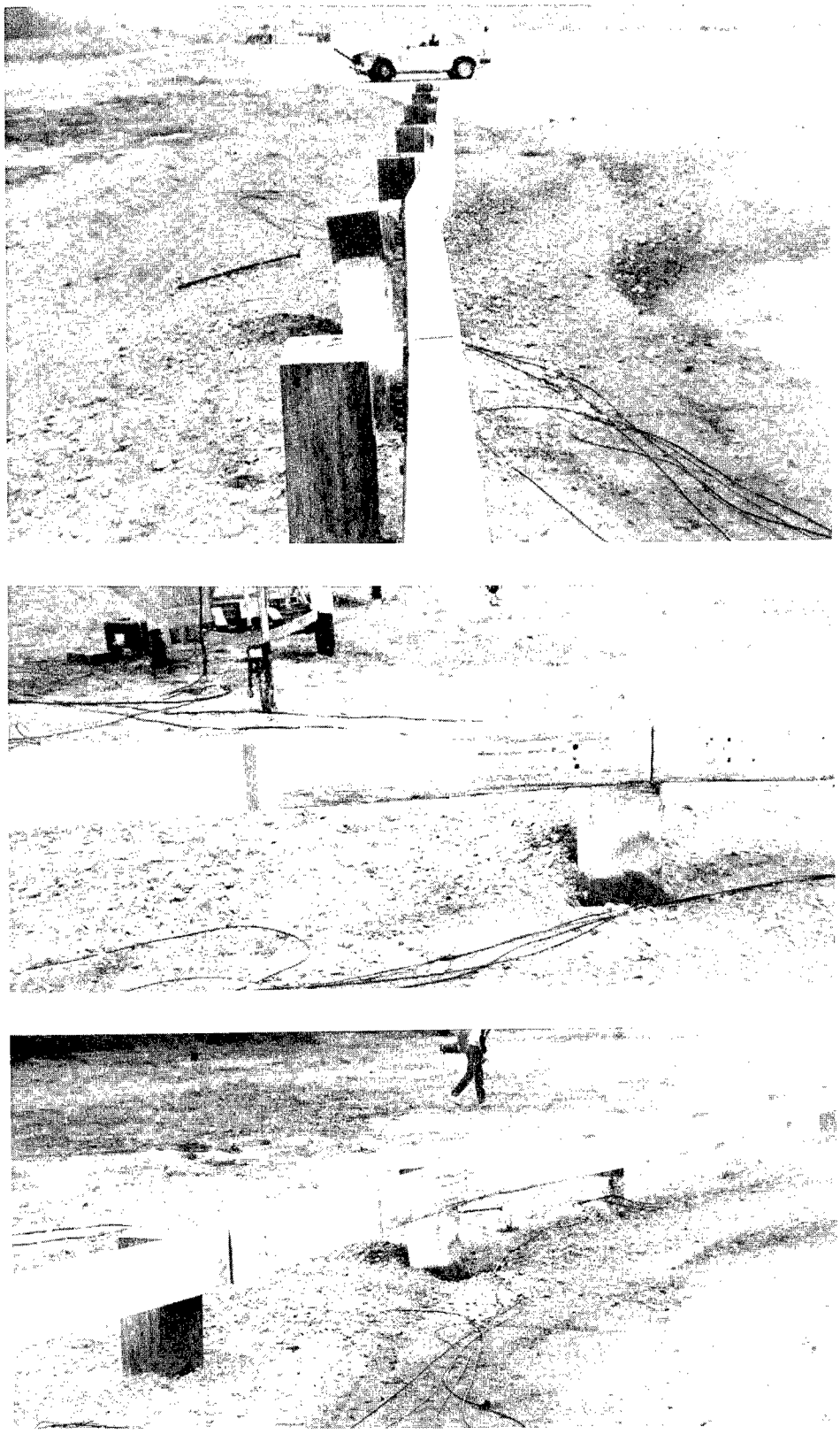

Figure 73. Posttest photographs of guardrail system, test 1818-8-88.

9. TEST 1818-9-90

a. Test Device

The test device was the 32-in (0.81-m) Baltimore-Washington Parkway, smooth stone masonry bridge rail. The bridge rail consisted of masonry 27 in (0.69 m) high, 9 in (0.23 m) thick placed in front of a concrete wall of the same dimensions cast with the simulated bridge deck. Cap stones 5 in (0.13 m) thick and 20 in (0.51 m) wide were placed on the top of the masonry and concrete. The cap stones were 2 ft (0.61 m) and 3 ft (0.92 m) long laid randomly. The 20-in (0.51-m) width provided a 1-in (0.03-m) overhang on the front and back of the bridge rail. Each cap stone was anchored to the concrete wall with two 10-in (0.25-m) long, 0.75-in (0.019-m) diameter rebar pieces, epoxy grouted to the wall and capstone.

The masonry portion of the bridge rail (face stones and cap stones) was approximately 80 percent North Carolina granite and 20 percent Maryland native mica.

The concrete portion of the bridge rail was 75 ft (23 m) long and was located at the edge of a cantilevered concrete deck attached to a rigid, simulated support structure. The concrete deck and concrete wall were built to FHWA and NPS specifications. Epoxy-coated rebar was used throughout. Lateral deck bars were set on 6-in (0.15-m) centers. FHWA 4000 lb/in^2 (27560 kPa) class D(AE) concrete was used for the deck and wall.

The bridge rail was 75 ft (22 m) long. Figure 74 shows the test site and test device. Figure 75 shows a detailed drawing of the bridge rail system. Figure 76 shows pretest photographs of the bridge rail system.

b. Test Vehicle

The test vehicle was a 1981 Plymouth Gran Fury. The target inertial vehicle weight was 4500 ± 200 lb (2043 ± 91 kg). The inertial weight of the vehicle was 4377 lb (1987 kg). The target gross vehicle weight was 4500 ± 300 lb (2043 ± 136 kg). The gross vehicle weight was 4694 lb (2131 kg).

X-, y- and z-axis accelerometers were mounted in the car along with roll and yaw rate gyros. Two uninstrumented dummies were placed in the vehicle in the driver seat, restrained and in the passenger seat, restrained. Pretest photographs of the test vehicle are shown in figure 77.

c. Impact Description

Review of the high-speed films, fifth wheel and speed trap data indicated that the test vehicle impacted at 60.4 mi/h (27.0 m/s) and 25 degrees. This review also indicated that the right corner of the vehicle impacted the bridge rail at the desired point.

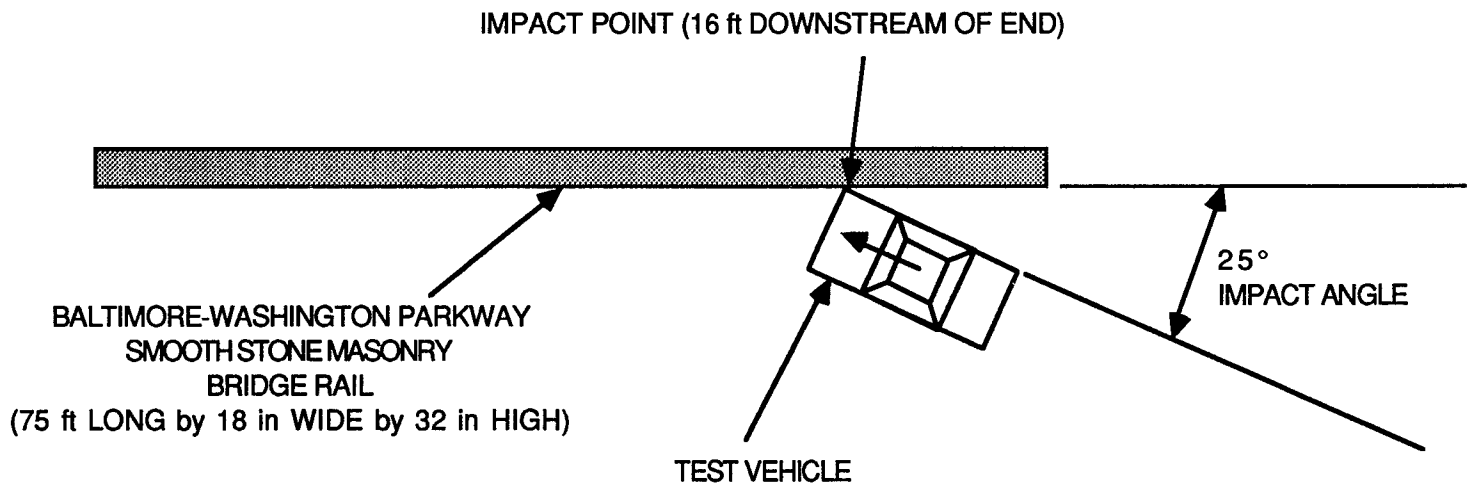

1 in = 0.03 m 1 ft = 0.30 m

Figure 74. Test site layout, test 1818-9-90

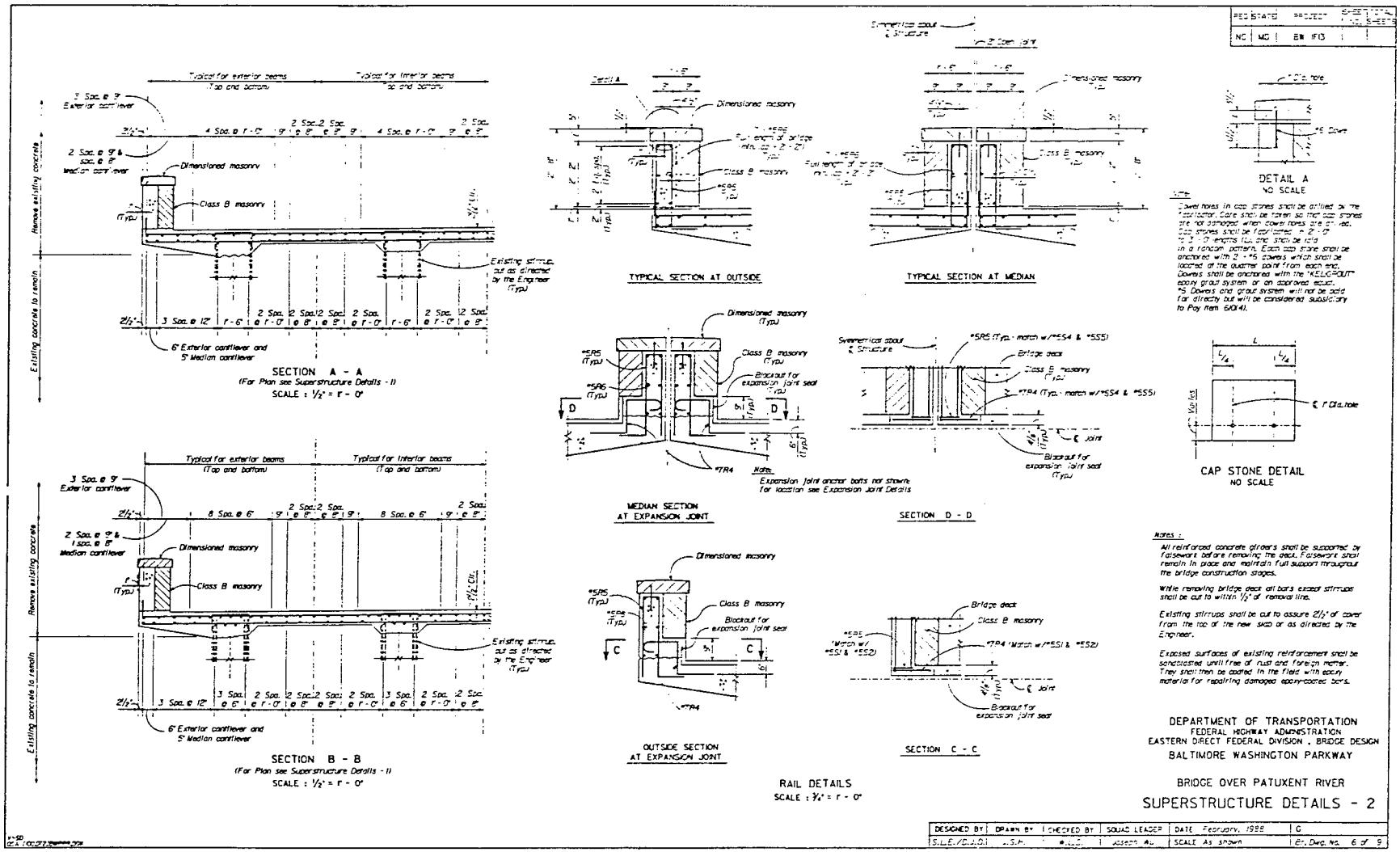

1 in = 0.03 m 1 ft = 0.30 m

Figure 75. Test device, test 1818-9-90.

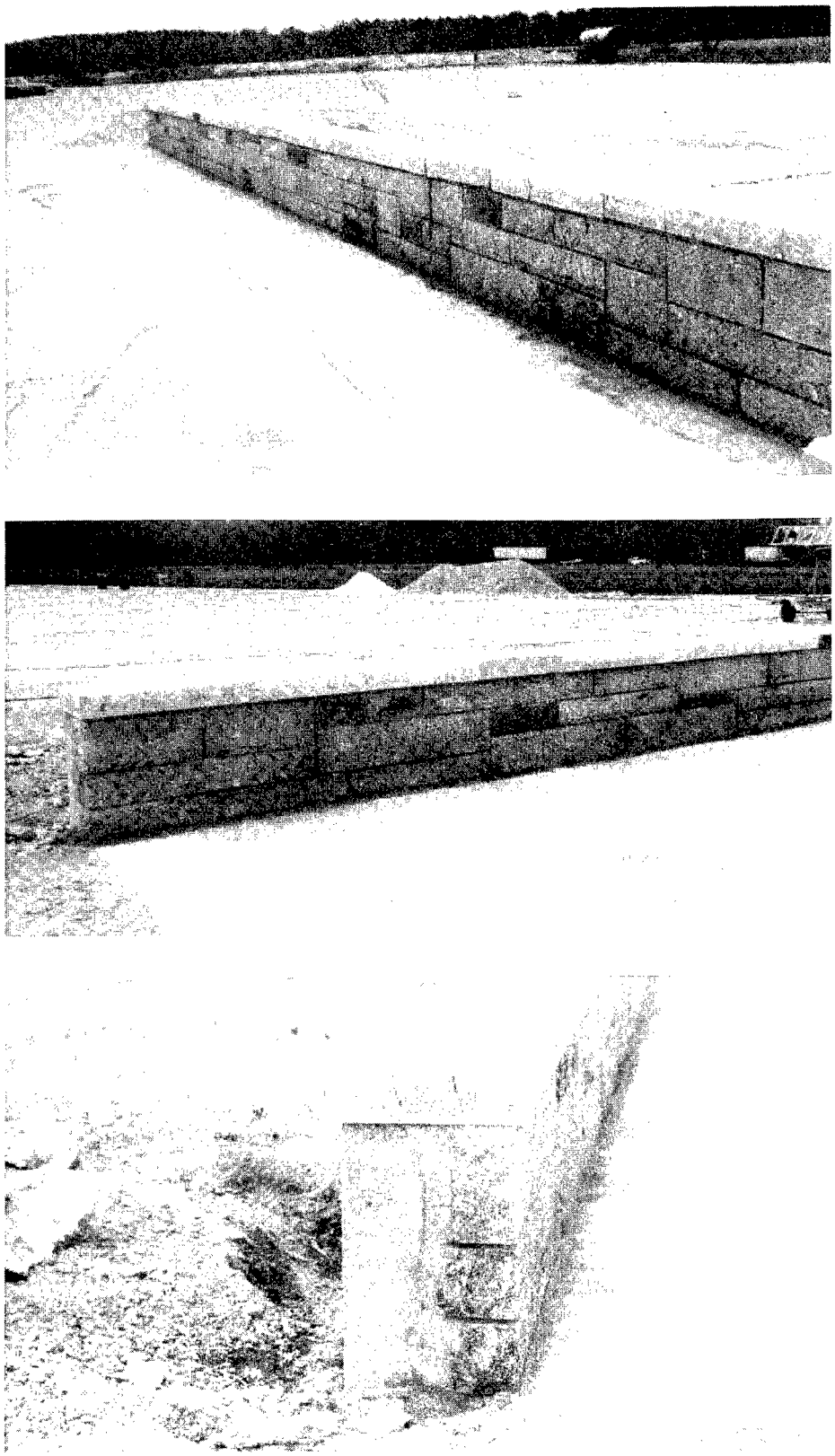

Figure 76. Pretest photographs of bridge rail system, test 1818-9-90.

Figure 77. Pretest photographs of test vehicle, test 1818-9-90.

Upon impact, the front of the vehicle was deformed and skewed toward the non-impact side. The vehicle continued to crush until the A-pillar contacted the bridge rail. The vehicle then yawed around, the end of the vehicle slapped against the bridge rail and the vehicle exited the bridge rail. The vehicle remained in contact with the bridge rail for approximately 15 ft (4.6 m). The vehicle was redirected at 42.6 mi/h (19.0 m/s) and 3 degrees. The vehicle came to rest 100 ft (30 m) downstream of the end of the bridge rail, 43 ft (13.1 m) behind the front face, after turning and yawing 175 degrees from the angle of the bridge rail.

Upon impact, the driver dummy fell into the passenger seat, held by the seat belt. The passenger dummy's head shattered the passenger side window and the dummy bent the passenger side door. The passenger dummy's head and shoulders were outside of the window during the entire impact event. The driver dummy came to rest upright and the passenger dummy came to rest leaning on the driver.

A summary of test conditions and results are shown in figure 78. Data analysis was performed and the vehicle x-axis and y-axis, 100 Hz acceleration traces are shown in figure 79.

d. Vehicle Damage

Damage occurred to the grill, front bumper, hood and entire right side of the vehicle. The passenger side door was pushed out due to the impact of the passenger dummy. Posttest photographs of the vehicle are shown in figure 80.

e. Bridge Rail Damage

The bridge rail showed only minor scuffing for the 15 ft (4.6 m) that the vehicle was in contact. Other than this scuffing, there was no damage to the bridge rail. Posttest photographs of the bridge rail are shown in figure 81.

10. TEST 1818-12-88

a. Test Device

The test device was an artificial stone, precast concrete median barrier. The device for this test was described earlier in this section (see subsection 7 - test 1818-7-88).

Figure 82 shows the test site and test device. Figure 83 shows a detailed drawing of the median barrier system. Figure 84 shows pretest photographs of the median barrier system.

b. Test Vehicle

The test vehicle was a 1981 Plymouth Gran Fury. The target inertial vehicle weight was 4500 ± 200 lb (2043 ± 91 kg). The inertial weight of the vehicle was 4356 lb (1978 kg). The target

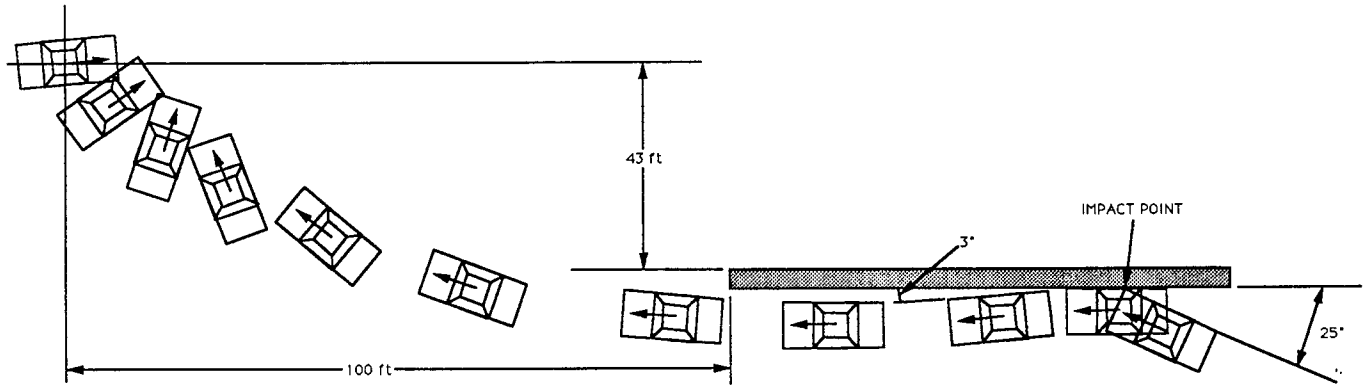

Date: 20 April 1990
Weather: Partially Cloudy, 60° F

Test Vehicle: 1981 Plymouth Gran Fury

Device Configuration: 32-in Baltimore-Washington Parkway, smooth-stone masonry bridge rail, 75 ft long. 27 in high, 9 in thick masonry in front of 27 in high, 9 in thick concrete wall. 5 in thick, 20 in wide cap stones, 1-in overhang. Masonry 80% North Carolina granite and 20% Maryland native mica.

1. Vehicle Weight:

	Test Inertial	Gross
Planned:	4500 ± 200	4500 ± 300
Actual:	4377	4694

2. Number of Occupants: Two

3. Occupant Model: Anthropomorphic Dummy, 50th percentile, male

4. Occupant Location: Driver Seat, Restrained
Passenger Seat, Restrained

5. Impact:

	Speed	Angle (a)	Location
Planned:	60.0 mi/h	25°	16 ft downstream of end
Actual:	60.4 mi/h	25°	16 ft downstream of end

6. Redirection Angle: 3 degrees

7. Redirection Speed: 42.6 mi/h (62.5 ft/s)

8. Total Speed Change: 17.8 mi/h (26.1 ft/s)

9. Total Momentum Change: 3804 lb-s

10. Vehicle Damage Index: (SAE J224a) 01RFEW2

11. NCHRP 230 Test Number: 10

12. Impact Severity:

$\frac{m(V \sin a)^2}{2}$ 95.3 kip-ft (Spec: 88 to 114 kip-ft)

13. Vehicle Analysis:

	Observed	Design/ Limit Value
NCHRP 230:		
Longitudinal:		
Delta-V at 2 ft:	-27.6 ft/s	30/40 ft/s
Ridedown Acceleration:	-6.4 g's	15/20 g's
Driver:		
Delta-V at 1.92 ft (actual):	-27.2 ft/s	30/40 ft/s
Ridedown Acceleration:	-6.4 g's	15/20 g's
Passenger actual flail was also 1.92 ft		
Lateral:		
Delta-V at 1 ft:	29.8 ft/s	20/30 ft/s
Ridedown Acceleration:	7.8 g's	15/20 g's
Driver:		
Delta-V at 0.96 ft (actual):	29.7 ft/s	20/30 ft/s
Ridedown Acceleration:	7.8 g's	15/20 g's
Passenger actual flail was also 0.96 ft		
TRC 191:		
Peak 50 ms acceleration:		
Longitudinal:	-10.8 g's	
Lateral:	14.3 g's	

14. Test Results Conclusion: Vehicle was redirected by the wall at 42.6 mi/h and 3 degrees. Because the vehicle did not intrude or come to rest in the adjacent traffic lanes, the vehicle slowdown criteria does not apply.

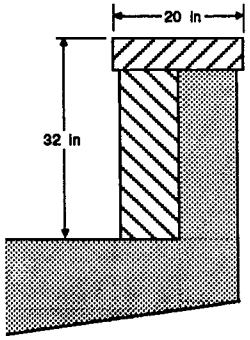

1 mi/h = 0.45 m/s
1 mi = 1609 m
1 in = 0.03 m
1 kip = 4450 N
1 ft = 0.30 m
1 kip-ft = 1355 N-m
1 lb = 0.45 kg
1 ft/s = 0.30 m/s
1 'g' = 32.2 ft/s^2 = 9.8 m/s^2
1 lb-sec = 4.45 N-s

Figure 78. Test summary, test 1818-9-90.

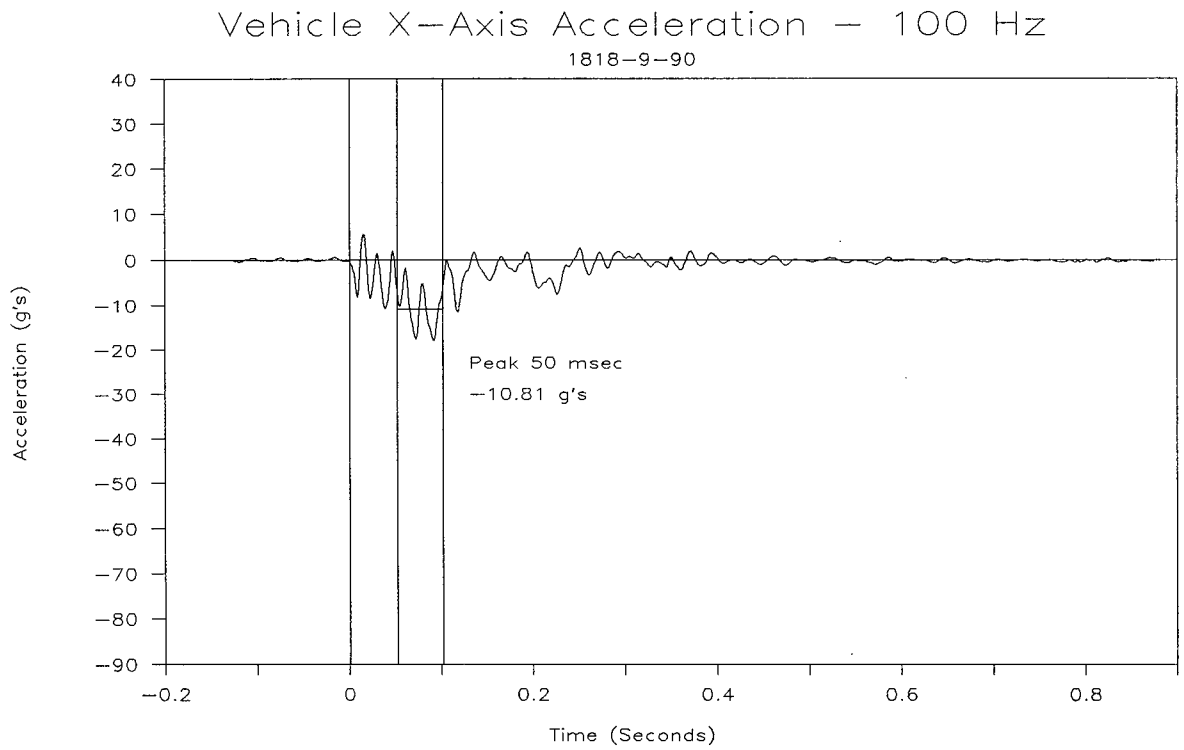

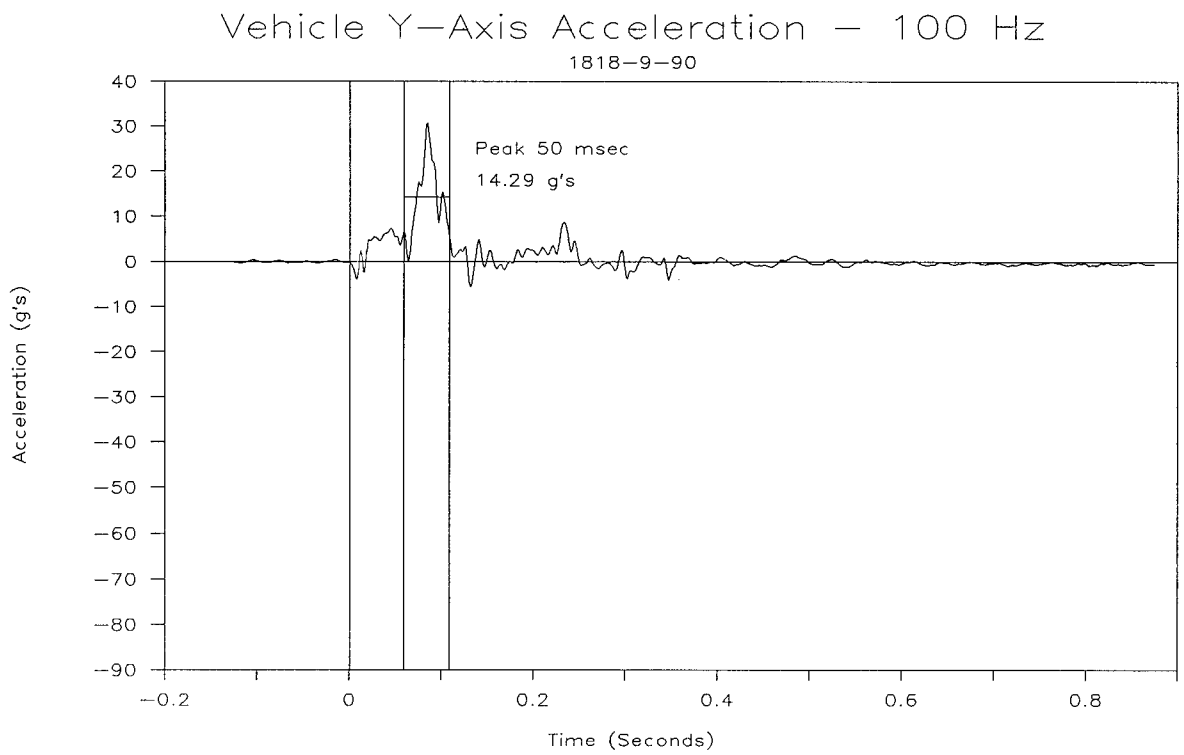

Figure 79. Vehicle acceleration, test 1818-9-90.

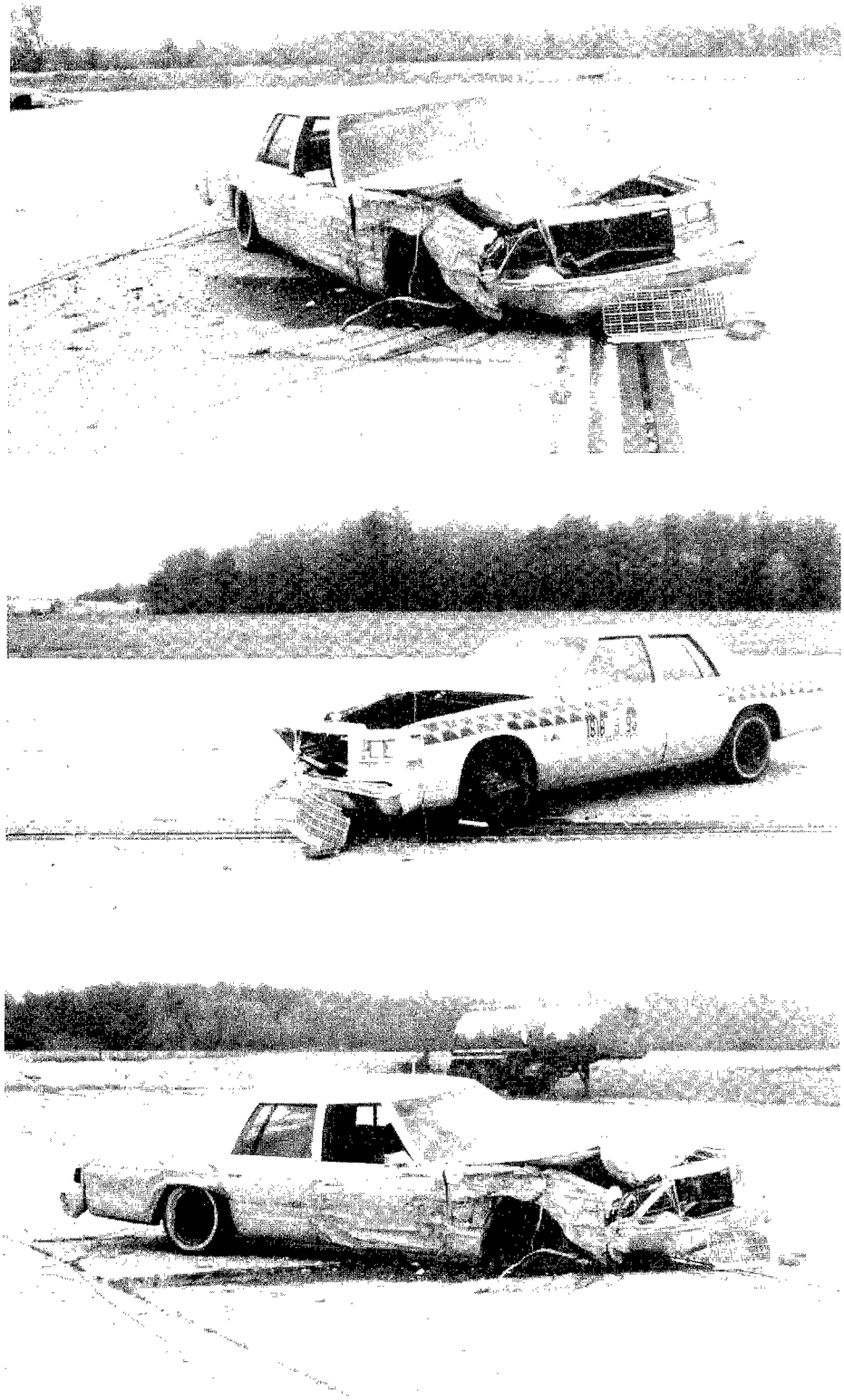

Figure 80. Posttest photographs of test vehicle, test 1818-9-90.

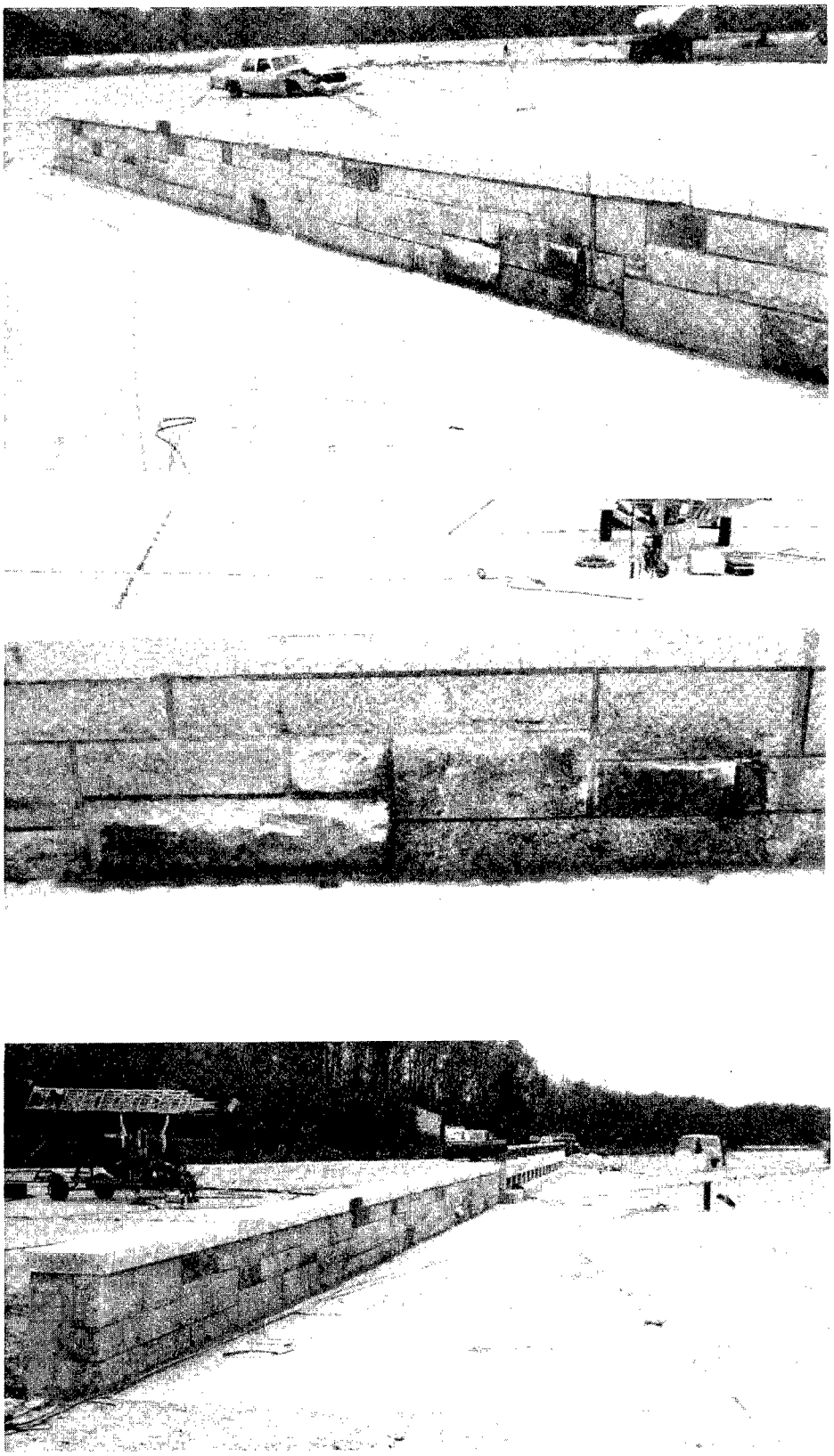

Figure 81. Posttest photographs of bridge rail system, test 1818-9-90.

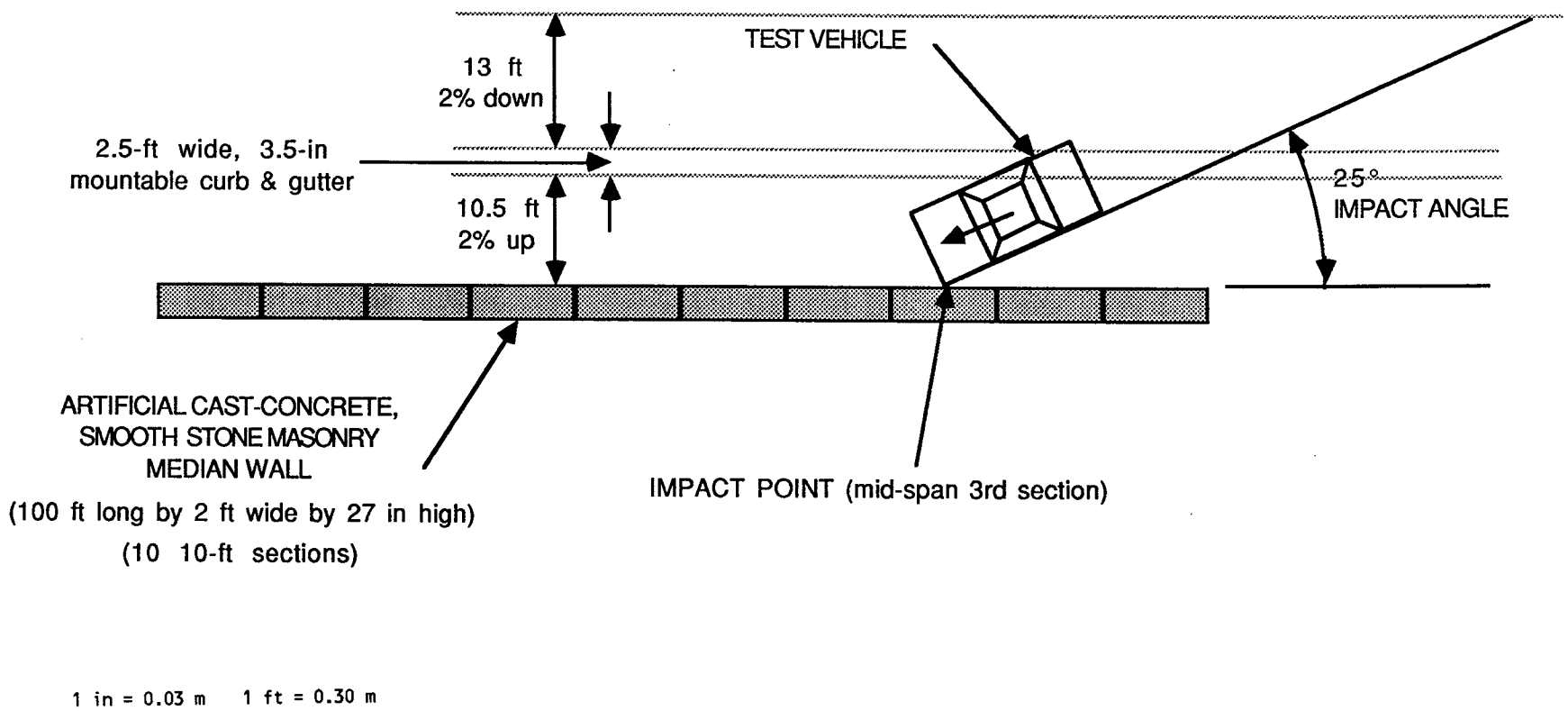

Figure 82. Test site layout, test 1818-12-88.

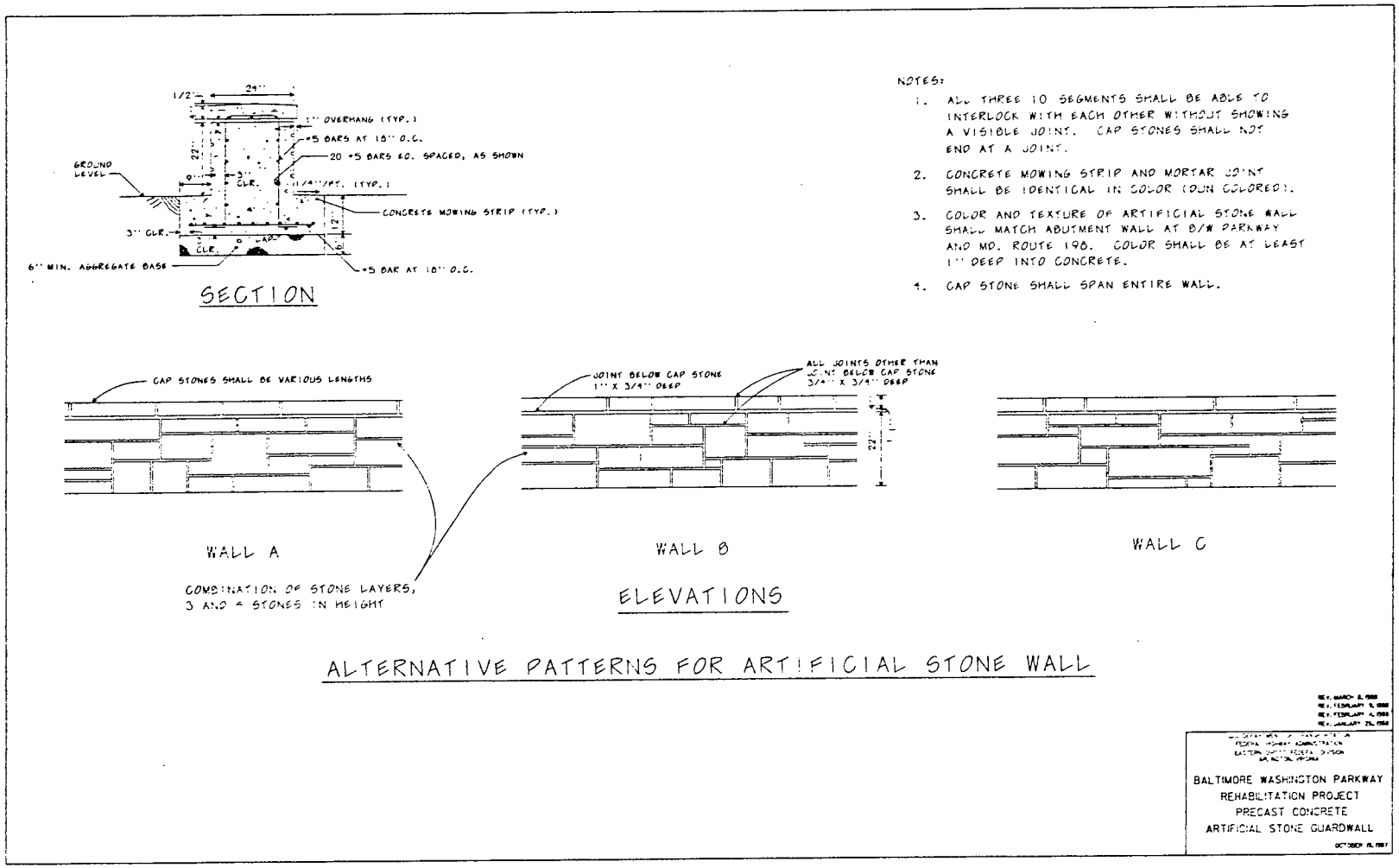

1 in = 0.03 m 1 ft = 0.30 m

Figure 83. Test device, test 1818-12-88.

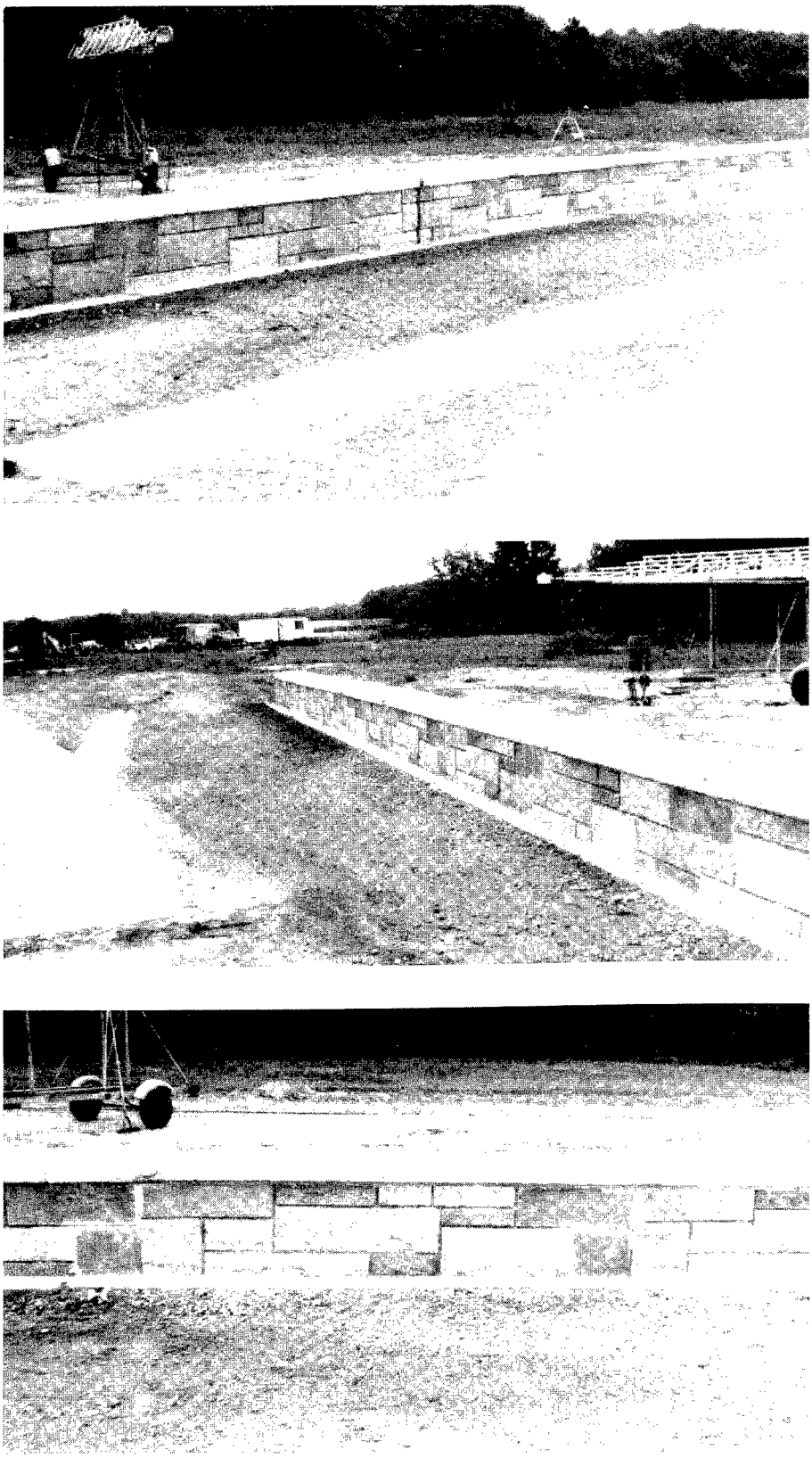

Figure 84. Pretest photographs of median barrier system, test 1818-12-88.

gross vehicle weight was 4500 ± 300 lb (2043 ± 136 kg). The gross weight of the vehicle was 4656 lb (2114 kg).

X-, y- and z-axis accelerometers were mounted in the car along with roll and yaw rate gyros. Two uninstrumented dummies were placed in the vehicle in the driver seat, restrained and in the passenger seat, restrained. Pretest photographs of the test vehicle are shown in figure 85.

c. Impact Description

Review of the high-speed films, fifth wheel data and speed trap data indicated that the test vehicle impacted the barrier at 61.5 mi/h (27.5 m/s) and 25 degrees. This review also indicated that the left corner of the vehicle impacted the median barrier 6 in (0.15 m) downstream of the desired impact point.

Prior to impact, the vehicle rolled approximately 10 degrees while traversing the shoulder, curb and gutter.

Upon impact, the front of the vehicle was deformed and skewed toward the non-impact side. The hood came open as the front of the car deformed. The left front of the vehicle continued to crush until the vehicle A-pillar contacted the barrier. The vehicle then yawed around and exited the wall. The vehicle remained in contact with the wall for approximately 15 ft (4.6 m). The vehicle was redirected at 37.6 mi/h (16.8 m/s) and 1 degree. The vehicle came to rest 170 ft (52 m) downstream of the impact point, 10 ft (3.0 m) behind the line of the barrier.

During the impact, the impact section of the wall and the next section downstream rotated back out of the line of the barrier approximately 3 in (0.08 m).

Inside the vehicle, it was observed that the dummies moved around but remained in their seats. The passenger fell into the lap of the driver. The dummies came to rest leaning toward and against each other.

A summary of the test conditions and results is given in figure 86. Data analysis was performed and the vehicle x-axis and y-axis, 100 Hz acceleration traces are shown in figure 87.

d. Vehicle Damage

Vehicle damage occurred mainly to the left side and front of the car. The left front fender, grill, bumper, drivers door, vehicle steering suspension were damaged significantly. Posttest photographs of the vehicle are shown in figure 88.

e. Median Barrier Damage

This barrier performed well. The vehicle was redirected. During the impact, the impact section and the next section downstream

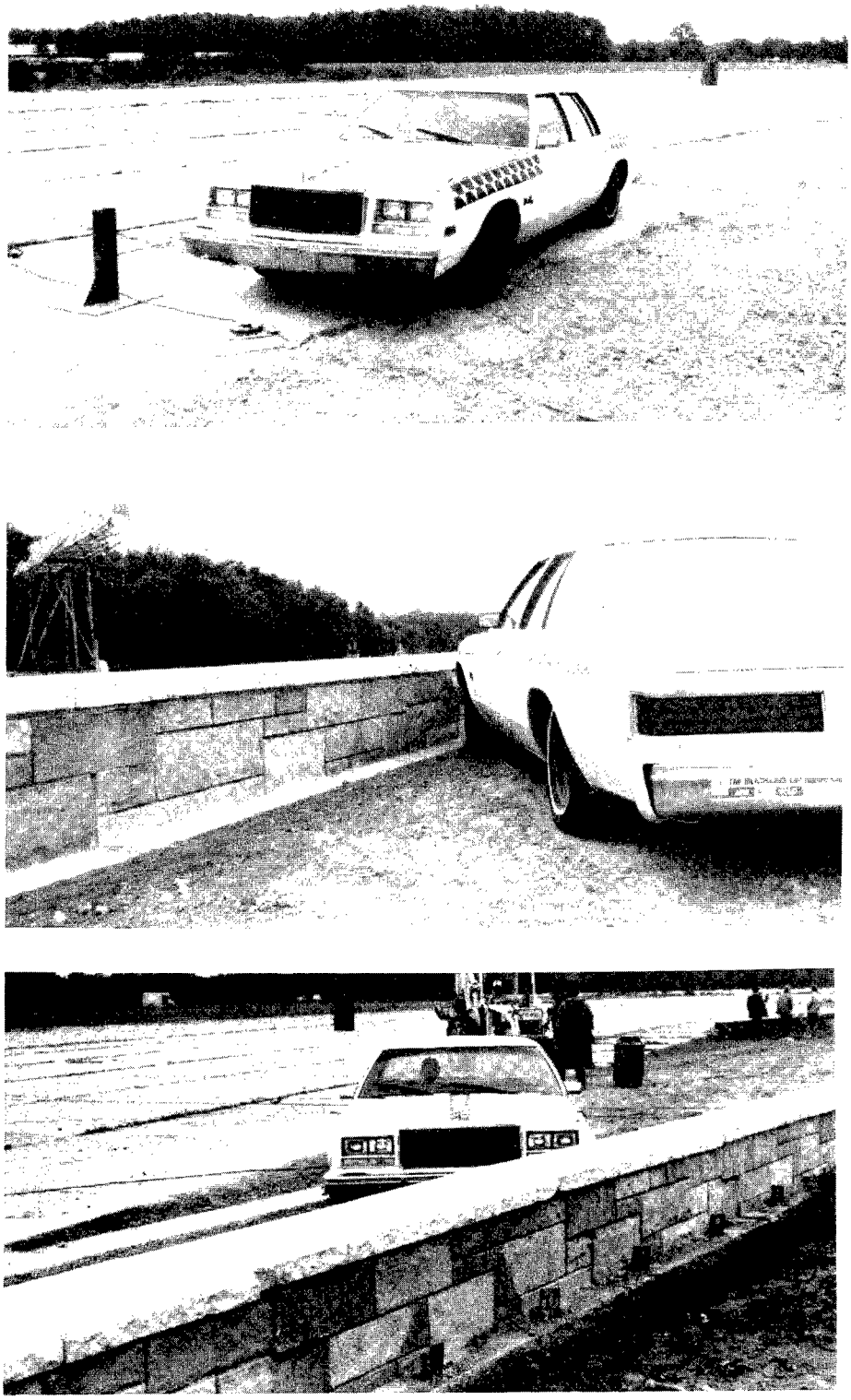

Figure 85. Pretest photographs of test vehicle, test 1818-12-88.

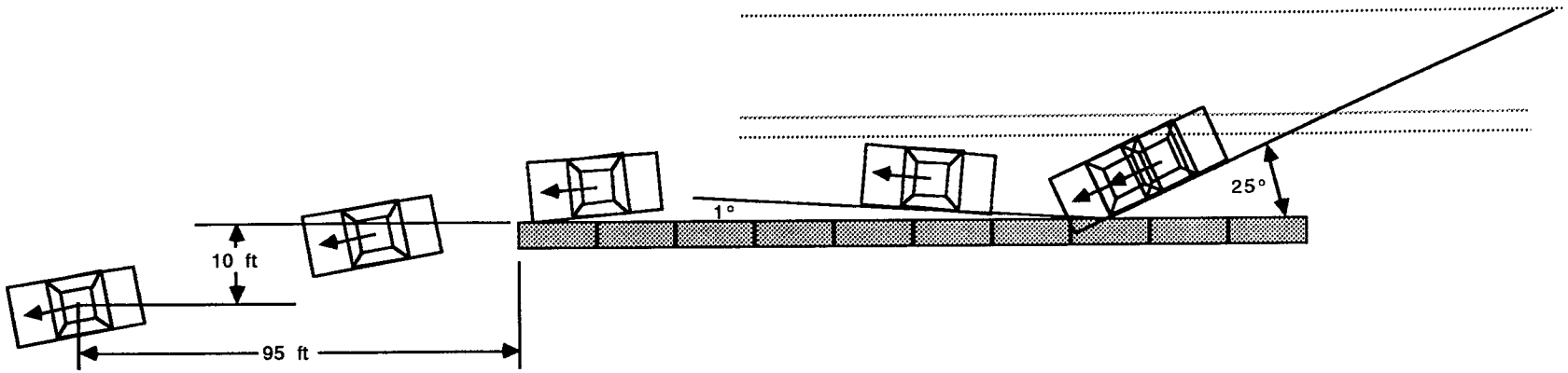

Date: 29 September 1988
Weather: Overcast, 60° F

Test Vehicle: 1981 Plymouth Gran Fury

Device Configuration: Artificial, Cast-concrete, Smooth-Stone Median Barrier, 100 ft long, 27 in high, 1-in capstone overhang. 10 10-ft sections, round pin and socket keyway design. Set on foundation of packed crusher run type soil.

1. Vehicle Weight:

	Test Inertial	Gross
Planned:	4500 ± 200	4500 ± 300
Actual:	4356	4656

2. Number of Occupants: Two

3. Occupant Model: Anthropomorphic Dummy, 50th percentile, male

4. Occupant Location: Driver Seat, Restrained
Passenger Seat, Restrained

5. Impact:

	Speed	Angle (a)	Location
Planned:	60.0 mi/h	25°	Midspan, section 3
Actual:	61.5 mi/h	25°	6 in downstream of desired point

6. Redirection Angle: 1 degree

7. Redirection Speed: 37.6 mi/h (55.1 ft/s)

8. Total Speed Change: 23.9 mi/h (35.1 ft/s)

9. Total Momentum Change: 5075 lb-s

10. Vehicle Damage Index: 11LFEW3
(SAE J224a)

11. NCHRP 230 Test Number: 10

12. Impact Severity:

$\frac{m(V \sin a)^2}{2}$ 98.3 kip-ft
(Spec: 88 to 114 kip-ft)

13. Vehicle Analysis:

	Observed	Design/ Limit Value
NCHRP 230:		
Longitudinal:		
Delta-V at 2 ft:	-27.1 ft/s	30/40 ft/s
Ridedown Acceleration:	-5.5 g's	15/20 g's
Driver actual flail was 2.0 ft		
Passenger:		
Delta-V at 2.13 ft (actual):	-27.3 ft/s	30/40 ft/s
Ridedown Acceleration:	-5.5 g's	15/20 g's
Lateral:		
Delta-V at 1 ft:	-23.6 ft/s	20/30 ft/s
Ridedown Acceleration:	-7.3 g's	15/20 g's
Driver actual flail was 1.0 ft		
Passenger:		
Delta-V at 0.96 ft (actual):	-23.1 ft/s	20/30 ft/s
Ridedown Acceleration:	-7.3 g's	15/20 g's
TRC 191:		
Peak 50 ms acceleration:		
Longitudinal:	-9.9 g's	
Lateral:	-11.7 g's	

14. Test Results Conclusion: Vehicle was redirected by the rail at 37.6 mi/h and 1 degree. Because the vehicle did not intrude or come to rest in the adjacent traffic lanes, the vehicle slowdown criteria does not apply.

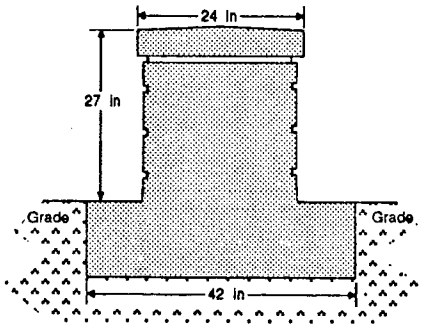

1 mi/h = 0.45 m/s
1 mi = 1609 m

1 in = 0.03 m
1 kip = 4450 N

1 ft = 0.30 m
1 kip-ft = 1355 N-m

1 lb = 0.45 kg
1 ft/s = 0.30 m/s

1 'g' = 32.2 ft/s^2 = 9.8 m/s^2
1 lb-sec = 4.45 N-s

Figure 86. Test summary, test 1818-12-88.

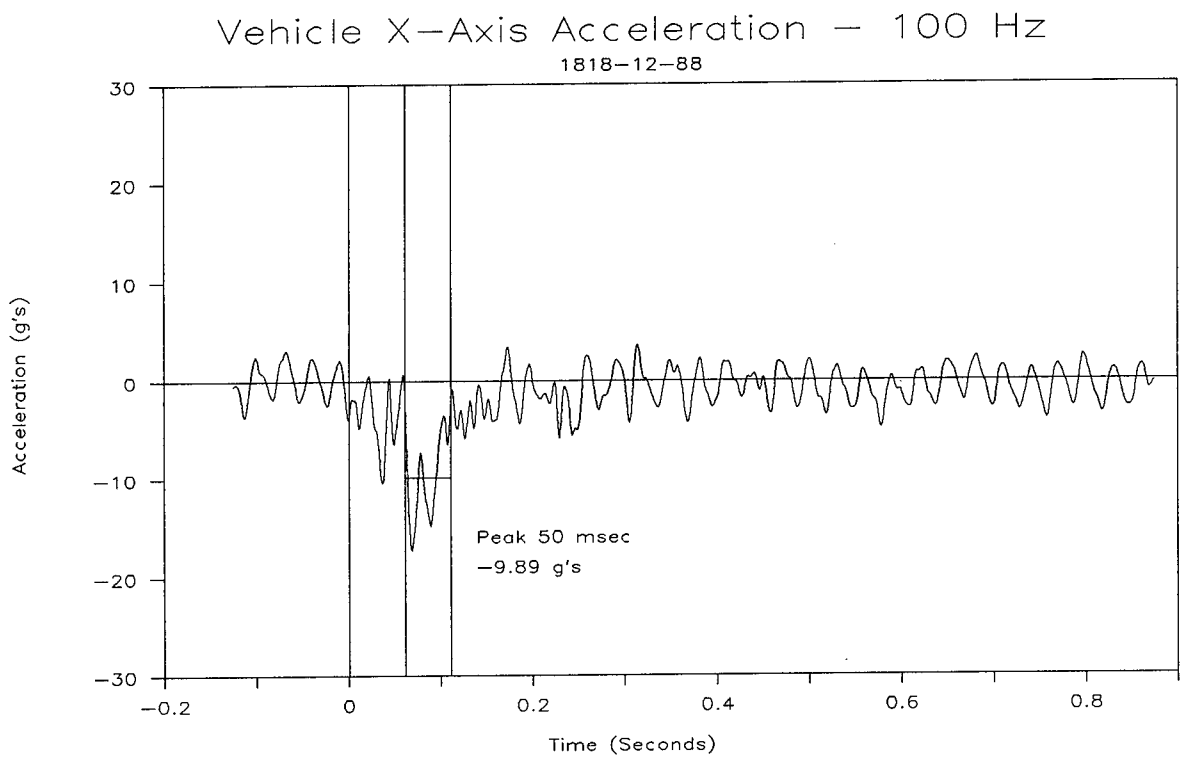

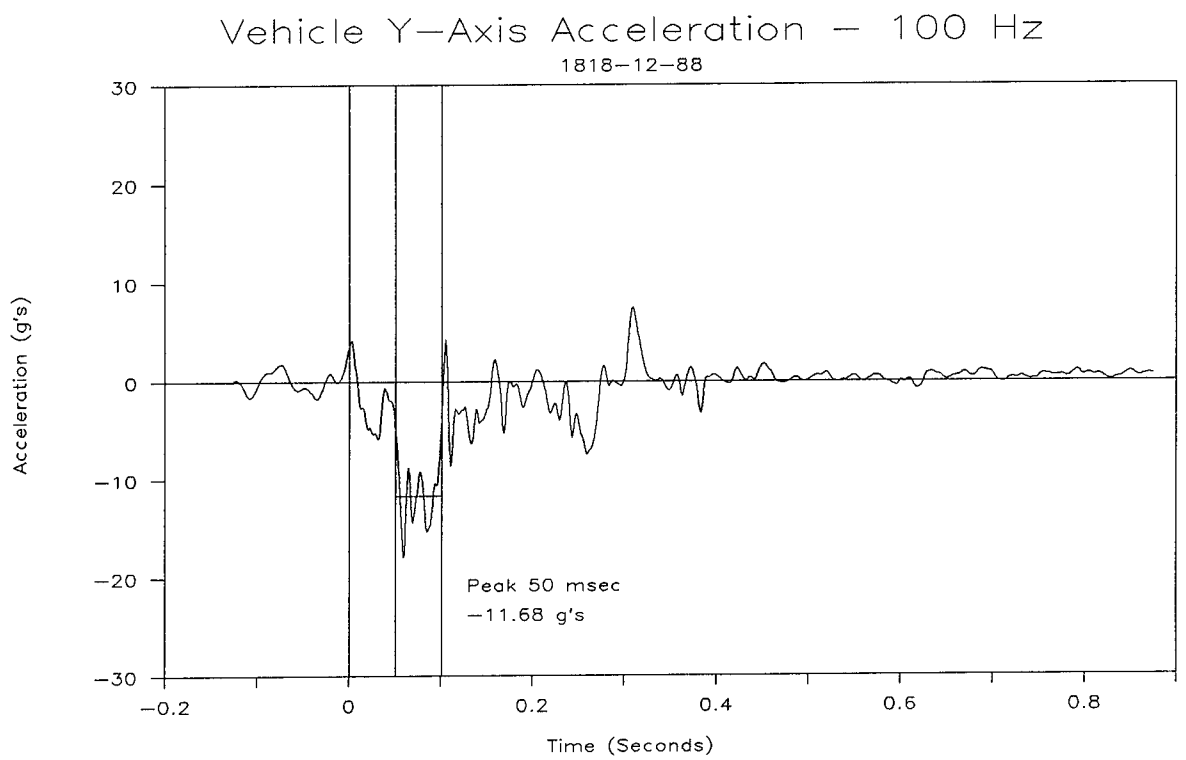

Figure 87. Vehicle acceleration, test 1818-12-88.

Figure 88. Posttest photographs of test vehicle, test 1818-12-88.

rotated back out of the line of the barrier approximately 3 in (0.08 m). Statically, the sections were also pushed back slightly. The maximum push back occurred at the section joint downstream of impact and was measured to be 3 in (0.08 m). Posttest photographs of the median barrier are shown in figure 89.

11. TEST 1818-14-88

a. Test Device

The test device was a low-speed design of a steel-backed, wood guardrail system. The posts were 10-in by 12-in by 7-ft (0.25-m by 0.30-m by 2.1-m) Southern Pine set at 10-ft (3.0-m) spacing with 6-in by 10-in by 10-ft (0.15-m by 0.25-m by 3.0-m) rails. The rails were backed by 6-in by 0.375-in (0.15-m by 0.010-m) steel plates. These plates were attached to the rail with 12 0.625-in (0.016-m) lag screws. The ends of the rails were through-bolted to a 3-ft by 6-in by 0.375-in (0.92-m by 0.15-m by 0.010-m) splice plate with 5 0.625-in (0.016-m) carriage bolts. The splice plate was bolted to the post with one 0.625-in (0.016-m) carriage bolt. A 4.75-in (0.12-m) plate washer was used on the backside of the splice plate bolt. The washer was set into a 5-in (0.13-m) diameter, 1.5-in (0.04-m) deep recess. There was no blockout between the post and the rail assembly. The rail height was 27 in (0.69 m) and the post was embedded 58 in (1.47 m).

Figure 90 shows the test site and test device. Figure 91 shows a detailed drawing of the guardrail system. Figure 92 shows pretest photographs of the guardrail system.

b. Test Vehicle

The test vehicle was a 1981 Plymouth Gran Fury. The target inertial vehicle weight was 4500 ± 200 lb (2043 ± 91 kg). The inertial weight of the vehicle was 4302 lb (1953 kg). The target gross vehicle weight was 4500 ± 300 lb (2043 ± 136 kg). The gross weight of the vehicle was 4632 lb (2103 kg).

X-, y- and z-axis accelerometers were mounted in the car along with roll and yaw rate gyros. Two uninstrumented dummies were placed in the vehicle in the driver seat, restrained and in the passenger seat, restrained. Pretest photographs of the test vehicle are shown in figure 93.

c. Impact Description

Review of the high-speed movie films and fifth wheel data indicated that the test vehicle impacted at 51.1 mi/h (22.8 m/s) and 25 degrees. This review also indicated that the right corner of the vehicle impacted the guardwall 1 ft (0.30 m) upstream of the desired point.

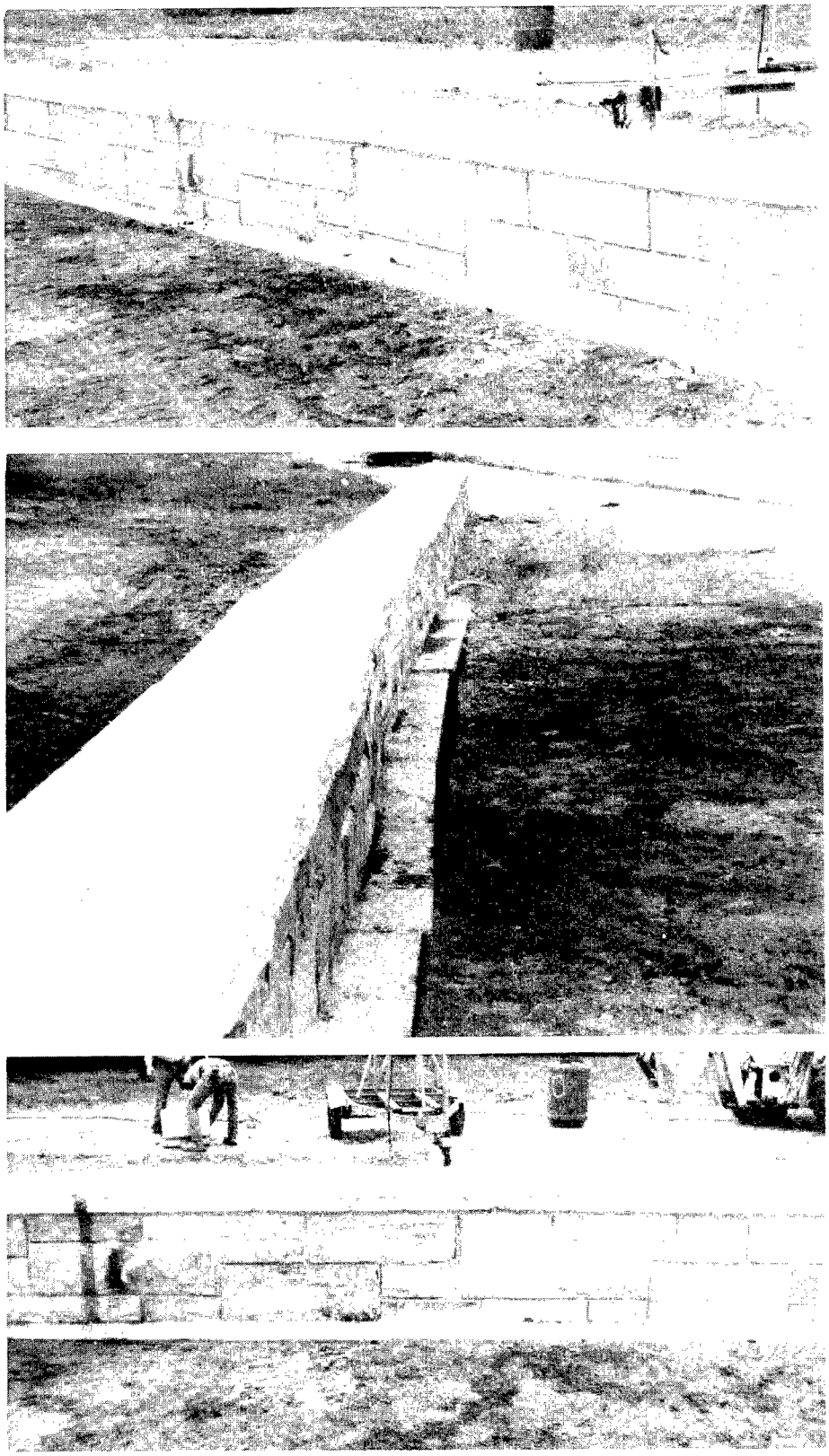

Figure 89. Posttest photographs of median barrier system, test 1818-12-88.

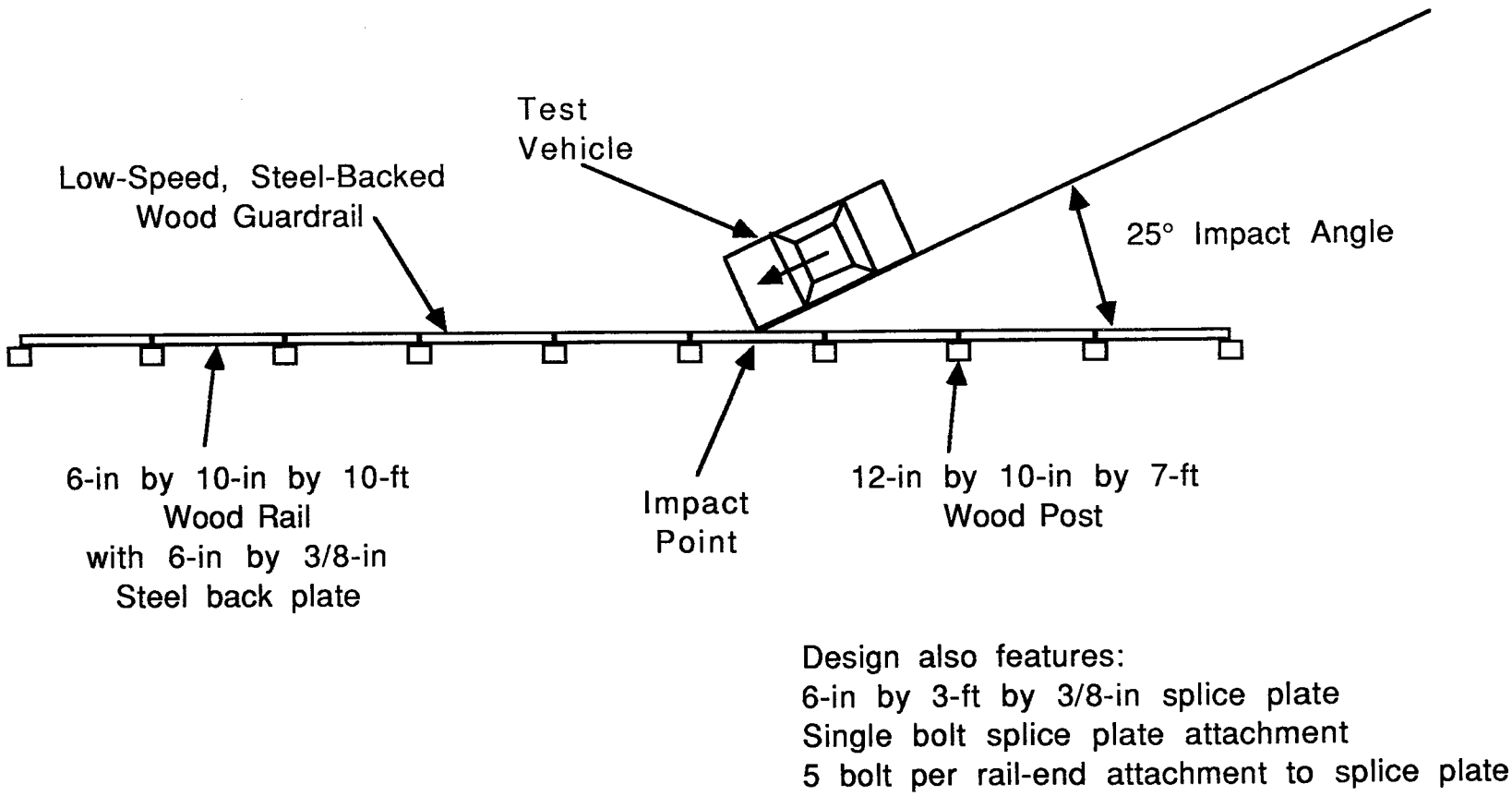

1 in = 0.03 m 1 ft = 0.30 m

Figure 90. Test site layout, test 1818-14-88.

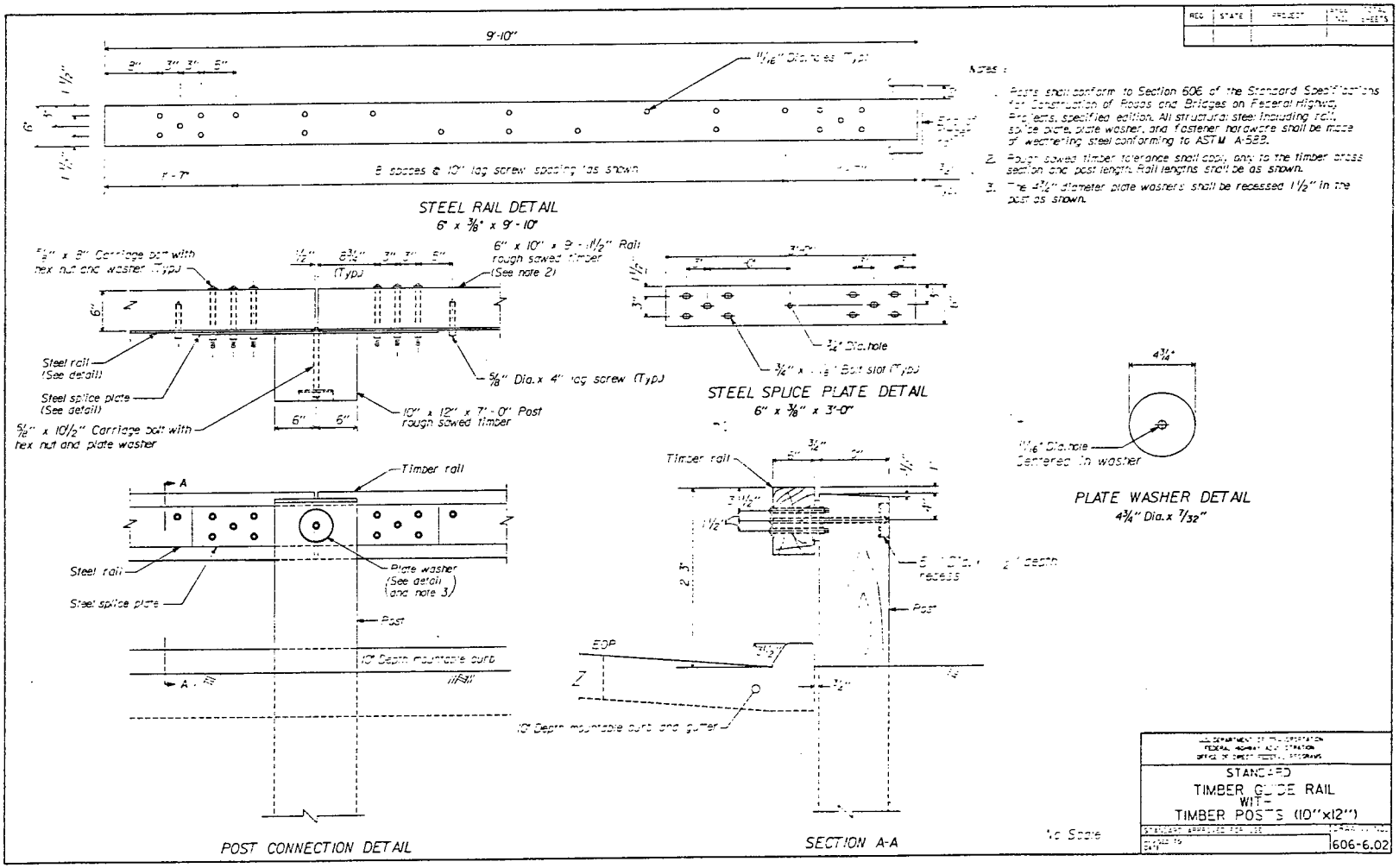

1 in = 0.03 m 1 ft = 0.30 m

Figure 91. Test device, test 1818-14-88.

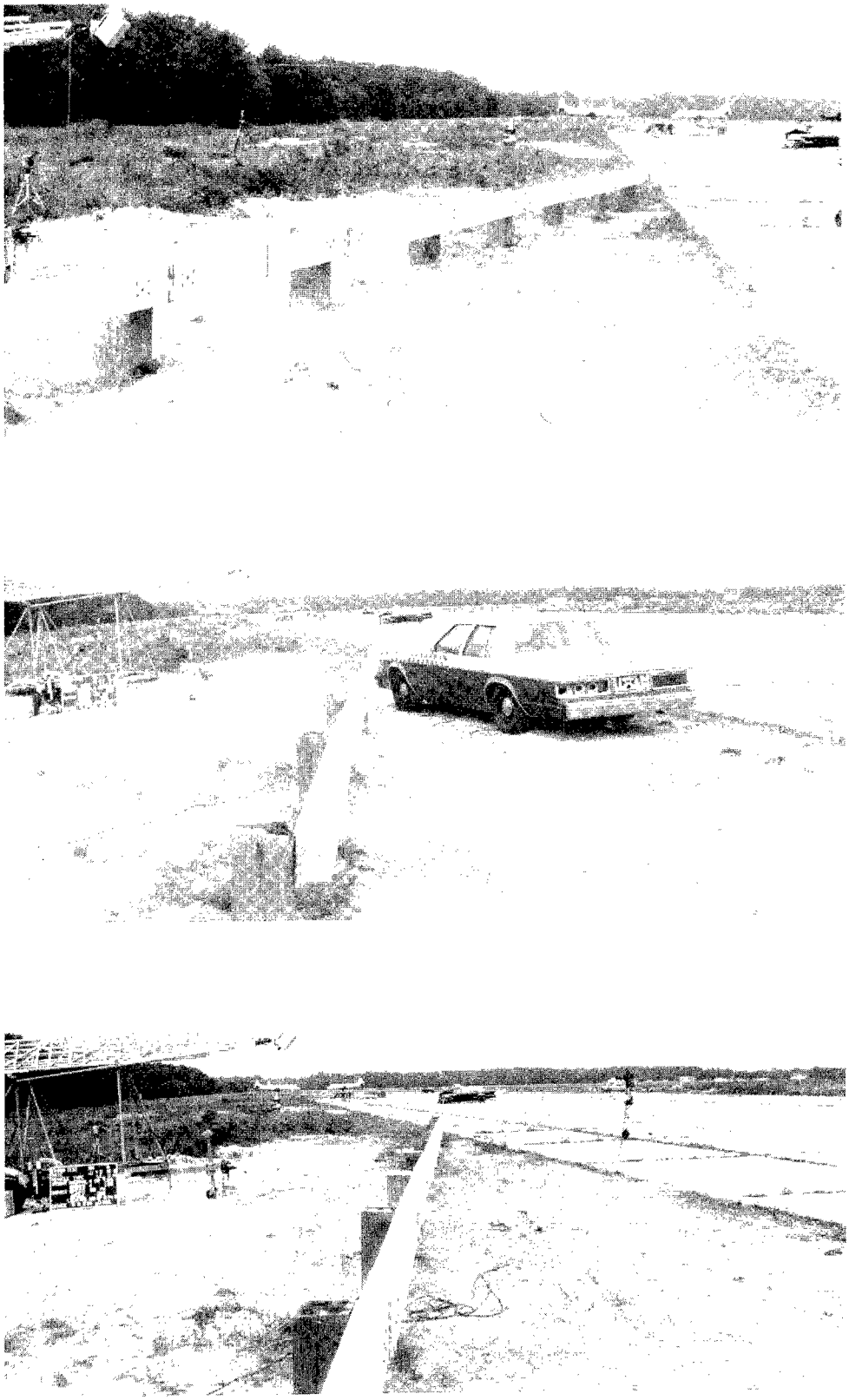

Figure 92. Pretest photographs of guardrail system, test 1818-14-88.

Figure 93. Pretest photographs of test vehicle, test 1818-14-88.

Upon impact, the front of the vehicle was deformed. The left front tire became wedged under the rail and was torn off in the impact with post 5 when post 5 rotated after the impact, the rail rose above the standard height. It is felt that the car getting under the rail caused the rail to rise and not the converse. The vehicle then yawed around and exited the rail. The vehicle remained in contact with the rail for approximately 15 ft (4.6 m). The vehicle was redirected at a speed of 24.8 mi/h (11.1 m/s) and at an angle of 8 degrees. The vehicle came to rest 155 ft (47 m) downstream of the impact point, 35 ft (11 m) behind the line of the guardrail.

Inside the vehicle, it was observed that the dummies moved around slightly but remained in their seats. The passenger fell into the lap of the driver but came upright again. The dummies came to rest leaning toward and against each other.

A summary of the test conditions and results is given in figure 94. Data analysis was performed and the vehicle x-axis and y-axis, 100 Hz acceleration traces are shown in figure 95.

d. Vehicle Damage

Vehicle damage occurred mainly to the left side and front of the car. The left front fender, grill, bumper, drivers door, and vehicle steering suspension were damaged significantly. The left front wheel was turn off in the impact with post number 5. No vehicle glass was broken during the impact. Posttest photographs of the vehicle are shown in figure 96.

e. Guardrail Damage

This guardrail performed adequately. The vehicle getting under the rail caused the rail to rise. The left front wheel of the vehicle was torn from the car in the impact with post 5. Posts 4 and 6 were pushed back 1 in (0.03 m) and post 5 was pushed back 5 in (0.13 m). Posttest photographs of the guardrail are shown in figure 97.

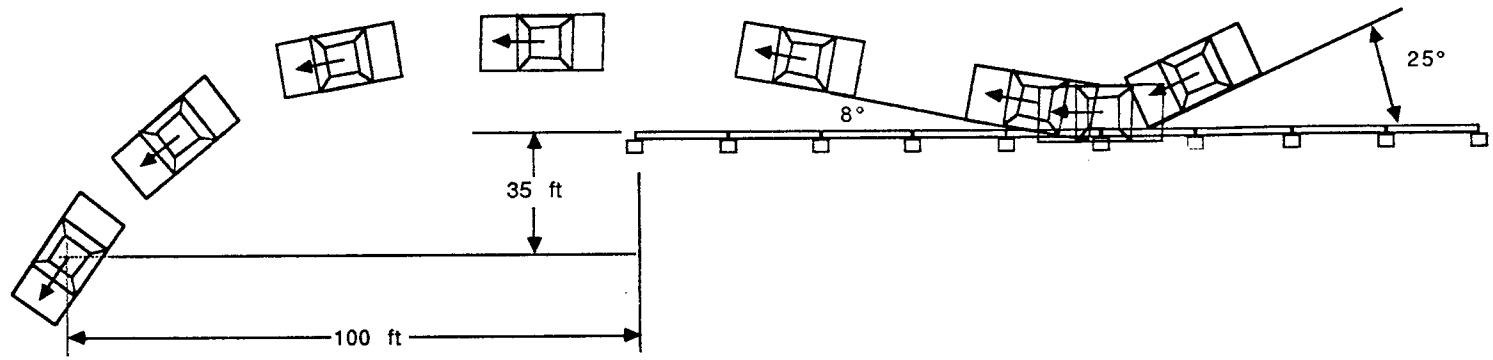

Date: 20 July 1988
Weather: Overcast 80° F

Test Vehicle: 1981 Plymouth Gran Fury

Device Configuration: Low speed, steel-backed wood guardrail, 90 ft long, 27 in high. 10-in by 12-in by 7-ft posts. 6-in by 10-in by 10-ft rails. 3-ft splice plates, 5 bolt splice to rail attachment, single bolt rail attachment to post.

1. Vehicle Weight:

	Test Inertial	Gross
Planned:	4500 ± 200	4500 ± 300
Actual:	4302	4632

2. Number of Occupants: Two

3. Occupant Model: Anthropomorphic Dummy, 50th percentile, male

4. Occupant Location: Driver Seat, Restrained
Passenger Seat, Restrained

5. Impact:

	Speed	Angle (a)	Location
Planned:	50.0 mi/h	25°	Midspan, posts 4 and 5
Actual:	51.1 mi/h	25°	One ft upstream of desired point

6. Redirection Angle: 8.0 degrees

7. Redirection Speed: 24.8 mi/h (36.4 ft/s)

8. Total Speed Change: 26.3 mi/h (38.6 ft/s)

9. Total Momentum Change: 5553 lb-s

10. Vehicle Damage Index: 11LFEW3
(SAE J224a)

11. NCHRP 230 Test Number: n/a

12. Impact Severity:

$\frac{m(V \sin a)^2}{2}$ 67.0 kip-ft
(Target: 67.1 kip-ft)

13. Vehicle Analysis:

	Observed	Design/ Limit Value
NCHRP 230:		
Longitudinal:		
Delta-V at 2 ft:	-27.7 ft/s	30/40 ft/s
Ridedown Acceleration:	-12.3 g's	15/20 g's
Driver:		
Delta-V at 2.46 ft (actual):	-30.9 ft/s	30/40 ft/s
Ridedown Acceleration:	-12.3 g's	15/20 g's
Passenger:		
Delta-V at 2.38 ft:	-29.9 ft/s	30/40 ft/s
Ridedown Acceleration:	-12.3 g's	15/20 g's
Lateral:		
Delta-V at 1 ft:	-15.1 ft/s	20/30 ft/s
Ridedown Acceleration:	-9.0 g's	15/20 g's
Driver actaul flail was 1.0 ft		
Passenger:		
Delta-V at 0.96 ft (actual):	-15.2 ft/s	20/30 ft/s
Ridedown Acceleration:	-9.0 g's	15/20 g's
TRC 191:		
Peak 50 ms acceleration:		
Longitudinal:	-9.2 g's	
Lateral:	-4.5 g's	

14. Test Results Conclusion: Vehicle was redirected by the rail at 24.8 mi/h and 8 degrees. Because the vehicle did not intrude or come to rest in the adjacent traffic lanes, the vehicle slowdown criteria does not apply.

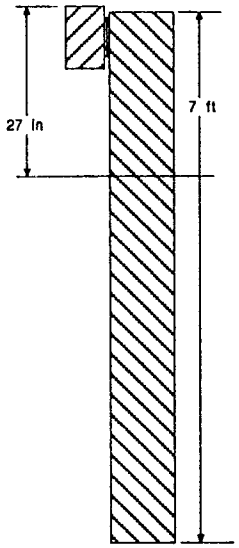

1 mi/h = 0.45 m/s
1 mi = 1609 m
1 in = 0.03 m
1 kip = 4450 N
1 ft = 0.30 m
1 kip-ft = 1355 N·m
1 lb = 0.45 kg
1 ft/s = 0.30 m/s
1 'g' = 32.2 ft/s^2 = 9.8 m/s^2
1 lb-sec = 4.45 N·s

Figure 94. Test summary, test 1818-14-88.

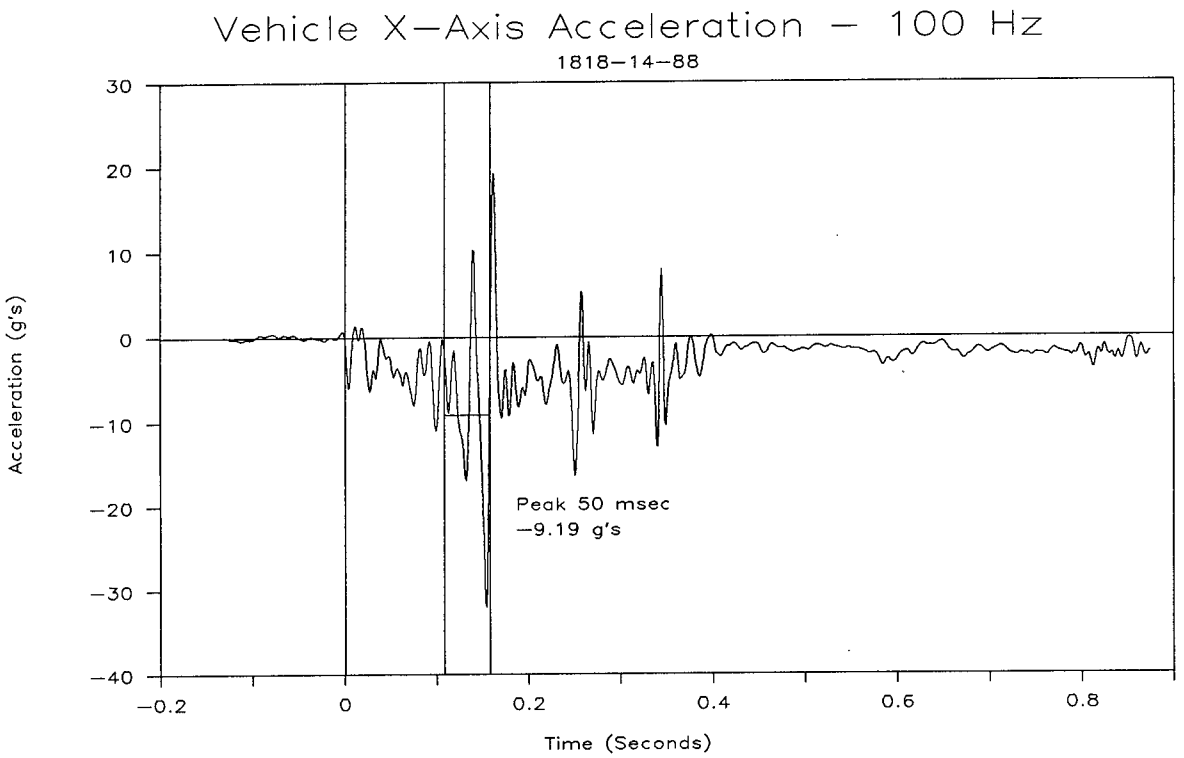

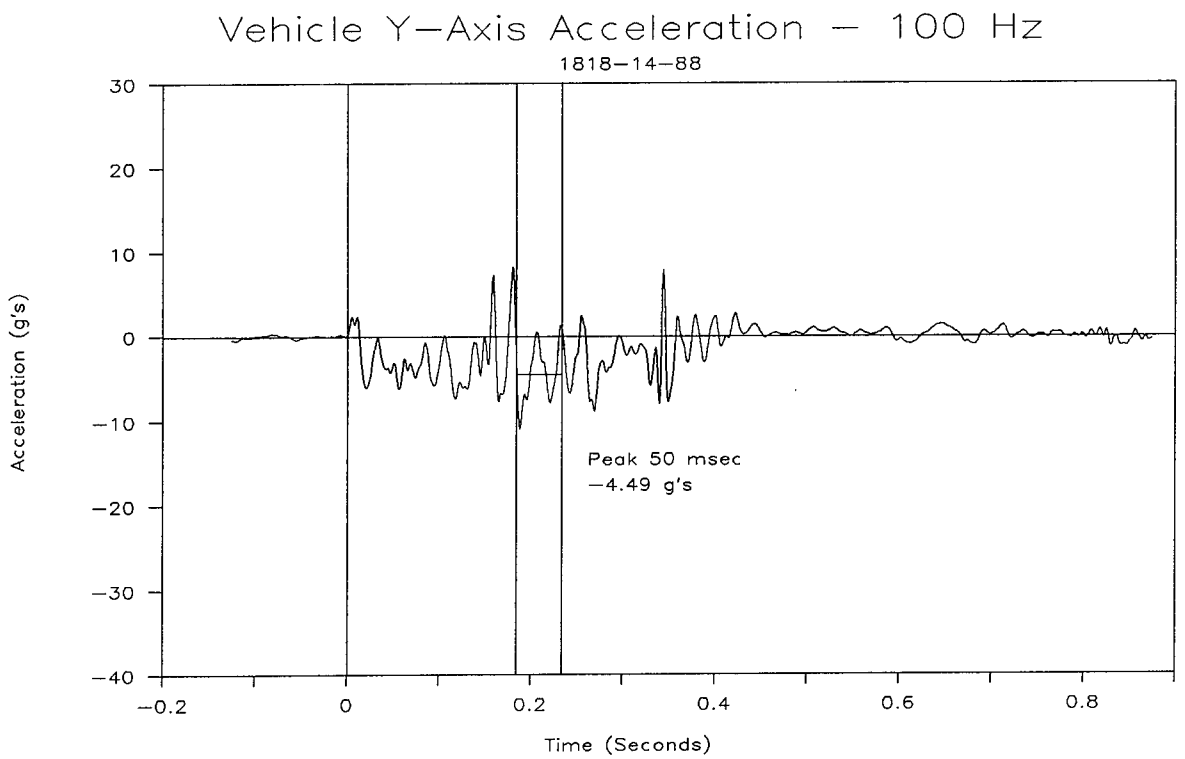

Figure 95. Vehicle acceleration, test 1818-14-88.

Figure 96. Posttest photographs of test vehicle, test 1818-14-88.

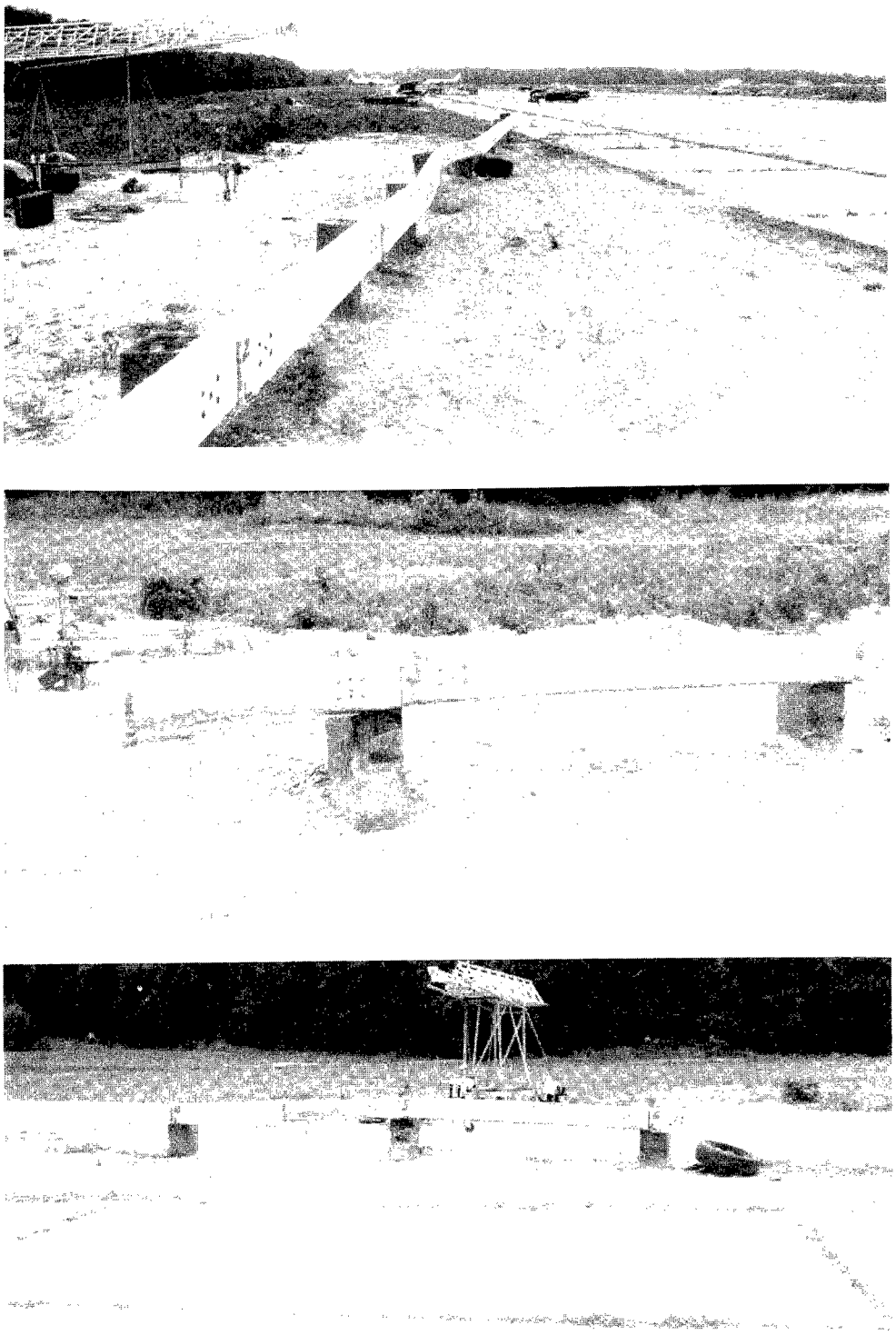

Figure 97. Posttest photographs of guardrail system, test 1818-14-88.

CONCLUSIONS

The following conclusions are based on the findings of this research project. They are divided by test article type.

1. STEEL-BACKED, WOODEN GUARDRAIL SYSTEM

a. The standard steel-backed, wooden guardrail system (8-in by 10-in by 5-ft, 8-in (0.20-m by 0.25-m by 1.73-m) posts) was proven inadequate during an 1800-lb (817-kg) vehicle test. Two iterations of redesign developed new alternatives.

b. The first redesign featured 8-in by 10-in by 7-ft (0.20-m by 0.25-m by 2.1-m) posts. This system was proven inadequate during a 4500-lb (2043-kg) vehicle test.

c. The second redesign featured 10-in by 12-in by 7-ft (0.25-m by 0.30-m by 2.1-m) posts, embedded 58 in (1.47 m). This design was successfully tested with an 1800-lb (817-kg) vehicle at 20 degrees and 60 mi/h (26.8 m/s) and a 4500-lb (2043-kg) vehicle at 25 degrees and 60 mi/h (26.8 m/s). These tests met all NCHRP 230 evaluation criteria.

d. Pendulum tests conducted indicated that increasing the embedment depth of the standard post by 10 in (0.25 m) (52 in vs. 42 in (1.32 m vs. 1.07 m), a 24 percent increase) increased the maximum force from 15.5 kips (68975 N) to 21 kips (93450 N) (a 35 percent increase). This indicates that the longer post is more able to utilize the strength of the post/soil system.

e. The low-speed design of the steel-backed, wooden guardrail was tested with a 4500-lb (2043-kg) vehicle at 25 degrees and 50 mi/h (22.4 m/s). This test met all evaluation criteria.

2. ROUGH STONE MASONRY GUARDWALL SYSTEM

The rough stone masonry guardwall with an 18-in (0.46-m) core height was found to be unacceptable when tested with a 4500-lb (2043-kg) vehicle at 60 mi/h (26.8 m/s) and 25 degrees. Analysis indicated that shifting the precast core up in the wall to a 20-in (0.51-m) height (maintaining a 27-in (0.69-m) wall height) would strengthen the wall. This change would utilize the added strength of the core to contribute to the strength of the system. This was confirmed during testing. The test conducted on the 20-in (0.51-m) core height wall with the 4500-lb (2043-kg) vehicle at 25 degrees and 60 mi/h (26.8 m/s) met all NCHRP 230 evaluation criteria.

3. ARTIFICIAL STONE, PRECAST CONCRETE MEDIAN BARRIER SYSTEM

a. The tests conducted on this system (4500-lb (2043-kg) vehicle, 25 degrees, 60 mi/h (26.8 m/s) and 1800-lb (817-kg) vehicle, 20 degrees, 60 mi/h (26.8 m/s)) met all NCHRP 230

evaluation criteria. These tests also featured the 3.5-in (0.09-m) mountable curb. The trajectory of the small car was altered slightly by the curb. The vehicle impacted approximately 3 ft (0.92 m) upstream of the desired point. This did not affect the results of the test. The large vehicle test was not affected.

b. The use of this barrier in place of the actual stone masonry median barrier could result in a great saving of time, labor and money.

c. However, installation of this barrier was somewhat difficult. Each section was cast upside-down and the true bottom of the section was screed to form a flat surface. However, this surface was not uniformly flat. To place and level the sections required repeated grading and smoothing of the crusher run base. A solution to this problem is required before mass production of this barrier.

4. SMOOTH STONE MASONRY BRIDGE RAIL SYSTEM

The 32-in (0.81-m) Baltimore-Washington Parkway, smooth stone masonry bridge rail was tested with a 4500-lb (2043-kg) vehicle at 25 degrees and 60 mi/h (26.8 m/s). This test met all NCHRP 230 evaluation criteria.

5. REMOVABLE GUARDRAIL SYSTEM

Designs were developed for the Removable Guardrail system for use in Glacier National Park. Seven post attachment methods and four rail attachment methods were developed and drawn. Any combination of these methods should be successful for the implementation of this design.

RECOMMENDATIONS

1. STEEL-BACKED, WOODEN GUARDRAIL SYSTEM

This system showed acceptable performance during testing, following the redesign efforts. This system should be implemented for new service locations.

2. ROUGH STONE MASONRY GUARDWALL SYSTEM

The 20-in (0.51-m) core height guardwall was successfully tested and should be implemented for new service locations.

3. ARTIFICIAL STONE, PRECAST CONCRETE MEDIAN BARRIER SYSTEM

This system showed acceptable performance. However, before implementation, a solution to the non-level bottom problem is required. The manufacturing quality control specifications for the sections must be tightened.

4. SMOOTH STONE MASONRY BRIDGE RAIL SYSTEM

This system showed acceptable performance during testing and should be implemented on the Baltimore-Washington Parkway and in other new service locations.

5. REMOVABLE GUARDRAIL SYSTEM

The designs for this system should be reviewed, modified, if necessary, and acted upon. Designs were submitted to the FHWA but comments were not received. Prototypes of the designs should be manufactured and tested for ease of installation and removal. The most promising designs should be refined, statically tested and crash tested, if necessary.

REFERENCES

1. Grader's Manual for Boards and 2-inch Dimensions, Southern Pine Inspection Bureau, Pensacola, FL, 1977.

2. D. Stout, J. Hinch, and T-L. Yang, *Force-Deflection Characteristics of Guardrail Posts*, FHWA-RD-88-193, Federal Highway Administration, Washington, DC, September 1988.

3. C. E. Buth, W. L. Campise, L. I. Griffin III, M. L. Love and D. L. Sicking, *Performance Limits of Longitudinal Barrier Systems, Volume I - Summary Report*, FHWA/RD-86/153, Federal Highway Administration, Washington, DC, May 1985.

4. Michie, J. D., "Recommended Procedures for the Safety Performance Evaluation of Highway Appurtenances," *National Cooperative Highway Research Program Report 230*, March 1981.

5. "Recommended Procedures for Vehicle Crash Testing of Highway Appurtenances," *Transportation Research Circular 191*, Transportation Research Board, Washington, DC, February 1978.

6. "Occupant Crash Protection in Passenger Cars, Multipurpose Passenger Vehicles, Trucks and Buses," Code of Federal Regulations, Title 49, Transportation, Part 571, Federal Motor Vehicle Safety Standard No. 208.

7. "Vehicle Damage Scale for Traffic Accident Investigators," *Traffic Accident Data Project Technical Bulletin No. 1*, National Safety Council, 1971.

8. "Collision Deformation Classification," *Recommended Practice J224a*, Society of Automotive Engineers, February 1971.

9. "Human Tolerance to Impact Conditions As Related to Motor Vehicle Design," *Information Report J885a*, Society of Automotive Engineers, December 1966.

10. "Dynamic Crash Test Information Reference Guide," version II, Automated Sciences Group, Inc., January 1982.

11. "Instrumentation for Impact Tests," *Recommended Practice J211b*, Society of Automotive Engineers, December 1974.

APPENDIX A - ANALYSIS OF VEHICLE OVERTURN DUE TO LATERAL LOADS

An analysis can be performed to determine the potential of vehicle overturn due to the lateral force acting on the vehicle by the guardrail. In this analysis, the impulse required to rotate the vehicle to its critical roll angle is computed. The critical roll angle is defined as the roll angle when the cg is located directly above the pivot point of the vehicle. See figure 98 for reference. First, assume the vehicle obtains a angular momentum due to an impulse (Im) at time t = 0. This momentum is just sufficient to raise the vehicle to the critical roll angle, thus:

at t = 0: $KE = 1/2\ I_T\ (\text{theta dot})^2$

$PE = 0$

at $t = t_c$: $KE = 0$

$PE = W\ (\text{delta } Z)$

where KE and PE are the kinetic and potential energies and

(theta dot)	= rotation rate (rad/sec)
I_T	= mass moment of inertial about the pivot
W	= vehicle weight
delta Z	= height change in cg
t_c	= time to obtain critical roll angle

Setting the energies equal:

$$PE_o + KE_o = PE_c + KE_c$$

or

$$1/2\ I_T\ (\text{theta dot})^2 = W\ (\text{delta } Z)$$

Substitute the expression I_T (theta dot) = Im (or theta dot = Im/I_T) into the equation, rearrange and solve for Im to obtain:

$$Im = [2(W)(\text{delta } Z)(I_T)]^{1/2} \qquad (1)$$

The equation was used to investigate a TTI bus test (TTI test number 4798-12) where overturn occurred.[3] Some approximations were made because the direct data needed for the analysis was not reported.

Find Z

From NCHRP 230, cg height (Z_o) = 56 in (1.42 m). If the wheel track is assumed to be 96 in (2.44 m), then the half track is 48

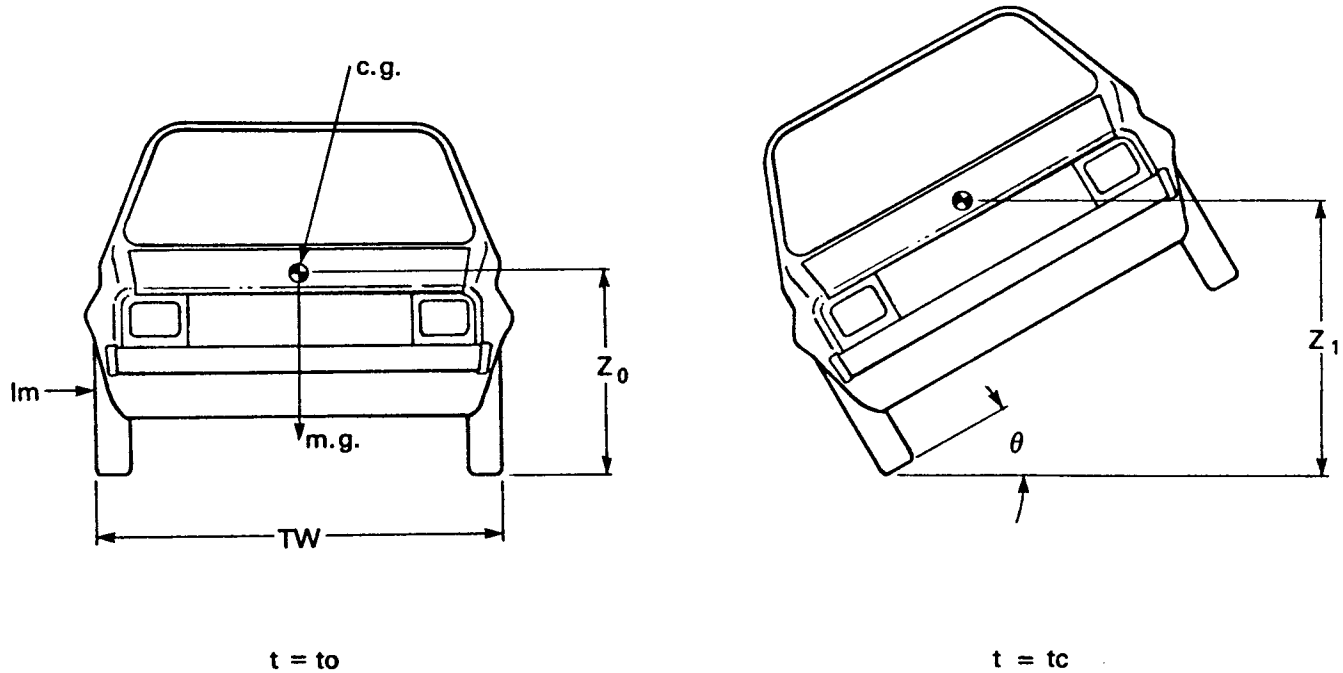

Figure 98. Overturn impulse model.

in (1.22 m). When the cg is directly above the pivot point is height is:

$$Z_C = [56^2+48^2]^{1/2}$$

$$= [5440]^{1/2}$$

$$= 73.8 \text{ in } (1.87 \text{ m})$$

then

$$\text{delta } Z = Z_C - Zo$$

$$= 73.8 - 56.0$$

$$= 17.8 \text{ in } (0.45 \text{ m})$$

or $= 1.5$ ft

Find I_T

From NCHRP 230, I_{roll} = 23000 slug-ft^2 (31280 kg-m^2) about the cg. The mass moment of inertia about the pivot point is:

$$I_T = I + Md^2$$

$$= 23000 + (39{,}970/32.2)(73.8/12)^2$$

$$= 69000 \text{ slug-ft}^2 \ (93840 \text{ kg-m}^2)$$

Find Im required for critical angle

Using equation (1) for Im:

$$Im = 91000 \text{ lb-s-ft } (123305 \text{ N-s-m})$$

This result can be compared to the actual measured impulse. The film record presented in the report indicated approximately a 10 degree roll angle developed in 100 ms. This is a roll rate of 1.7 rad/s. Multiplying this by the mass moment of inertia at the pivot point yields an estimate of the actual impulse, or

$$Im_{(actual)} = (1.7)(69000)$$

$$= 117000 \text{ lb-s-ft } (158535 \text{ N-s-m})$$

It can be seen that the actual impulse exceeded the impulse required to reach critical angle and thus the vehicle is likely to roll over.

Test results were required to perform this analysis but an estimate of the actual impulse can be obtained from other methods. One method is to directly compute the impulse from the geometry of the rail and impact condition. In the case of the

bus test, the impact angle was 15 degrees and an exit angle of 5 to 10 degrees could easily be expected. With a test speed of 60 mi/h (88 ft/s) (26.8 m/s), a lateral change in velocity of 34 ft/s (10.4 m/s) would be reasonable. The impulse lever arm can be estimated by subtracting the effective height of the center of the rail from the cg height of the vehicle. In this case, the lever arm would be:

$$\text{Lever arm (d)} = 56 - 23$$

$$= 33 \text{ in } (0.84 \text{ m})$$

or

$$= 2.75 \text{ ft}$$

Now the impulse can be calculated by:

$$I = M \text{ (delta V) } d$$

$$= \frac{40000}{32.2} (34) (2.75)$$

$$I = 116000 \text{ lb-s-ft } (157180 \text{ N-s-m})$$

This result is in agreement with the observed data taken from the film. This method was employed in the analysis performed in this project.

APPENDIX B - LONGITUDINAL STRENGTH OF THREE CURRENT NPS GUARDRAIL SYSTEMS

Design guidelines for guardrail systems require that they should withstand 50 kip (222500 N) tensile loadings in the longitudinal direction. This document presents analysis of three current NPS guardrail systems in use or under design according to the strength of the rail/splice plates and the bolted connections. The three guardrail systems evaluated are the timber with steel backed system used by EFLHD, the blocked-out and redesigned timber with steel-backed system proposed by WFLHD, and the log with steel-backed system proposed by WFLHD. The following pages document the analysis of these systems.

1. STEEL-BACKED TIMBER GUARDRAIL

a. Strength of Rail and Splice

Material ASTM A588 (COR-TEN)
Sy = 50 ksi (344500 kPa)
Ssy = (0.577)(50) = 28.9 ksi (199121 kPa)
Rail Thickness = 0.375 in (0.010 m)
Splice Thickness = 0.25 in (0.006 m)

(1). Strength of Rail Plate

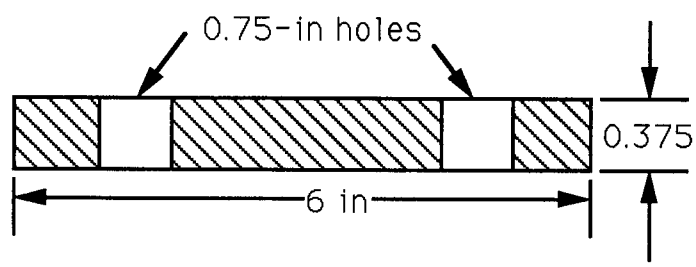

1 in = 0.03 m

$$\text{Area} = (6)(\tfrac{3}{8}) - (2)[(\tfrac{3}{4})(\tfrac{3}{8})] = 1.69 \text{ in}^2 \ (0.0011 \text{ m}^2)$$

$$\text{Sigma} = \frac{P}{A} \quad \text{-->} \quad P = (A)(\text{sigma})$$

$$P = (1.69)(50) = 84.4 \text{ kips } (375580 \text{ N})$$

(2). Strength of Splice Plate

(Splice is 2/3 thickness of the rail plate)

$$P = (\tfrac{2}{3})(84.4) = 56.3 \text{ kips } (250535 \text{ N})$$

b. Bolted Connection

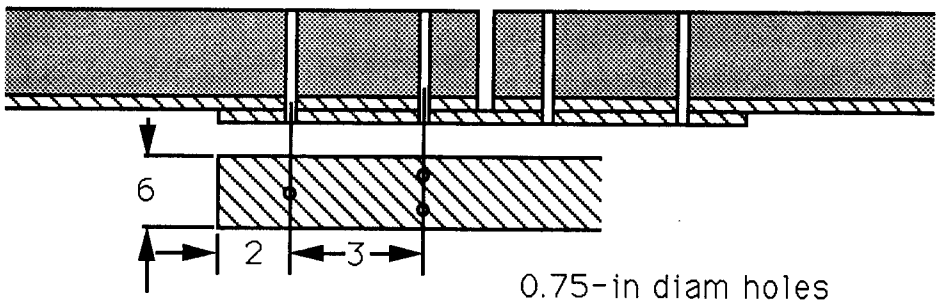

1 in = 0.03 m

0.75-in diam holes
0.625-in diam bolts

Bolts: ASTM A325
Sy = 80 ksi (551200 kPa)
Ssy = 46.2 ksi (318318 kPa)

Bolts not torqued due to their installation through wood rail face. No friction or preload exists.

(1). <u>Bearing Failure of Bolt</u>

(a). Rail Plate

$$\text{sigma} = \frac{P/3}{td} \quad \text{-->} \quad P = 3\ td\ Sy$$

$$P = (3)(\tfrac{3}{8})(\tfrac{5}{8})(80\ \text{ksi}) = 56\ \text{kips}\ (249200\ \text{N})$$

(b). Splice Plate

(Splice plate is 2/3 thickness of rail plate)

$$P = (\tfrac{2}{3})(56) = 37.3\ \text{kips}\ (165985\ \text{N})$$

(2). <u>Bearing Failure of Rail Plate</u>

$$P = (3)(\tfrac{3}{8})(\tfrac{5}{8})(50\ \text{ksi}) = 35\ \text{kips}\ (155750\ \text{N})$$

(3). <u>Bearing Failure of Splice Plate</u>

$$P = (\tfrac{2}{3})(35\ \text{kips}) = 23.3\ \text{kips}\ (103685\ \text{N})$$

(4). <u>Shear of Bolts</u>

$$Ssy = \frac{P/3}{A} \qquad \text{and} \qquad A = \frac{(Pi)(d)^2}{4} = 0.31\ \text{in}^2\ (0.0002\ \text{m}^2)$$

$$P = \frac{(3)(Ssy)(Pi)(d)^2}{4}$$

$$= (3)(.31)(46.2) = 45.5 \text{ kips } (202475 \text{ N})$$

(5). <u>Tearout</u>

(a). Rail Plate

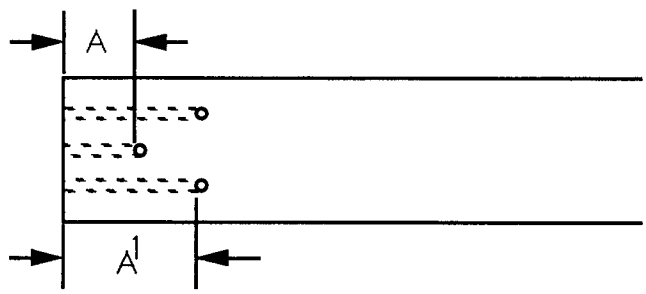

$$A = (2)-(\tfrac{3}{8}) = 1\tfrac{5}{8}$$

$$A^1 = (5)-(\tfrac{3}{8}) = 4\tfrac{5}{8}$$

$$t = \tfrac{3}{8}$$

2 tear lines/hole

$$A = \{(2)[(4\tfrac{5}{8})+(1\tfrac{5}{8})]\}(\tfrac{3}{8}) = 4.69 \text{ in}^2 \ (0.0030 \text{ m}^2)$$

$$P = (A)(Ssy)$$

$$= (4.69)(28.9)$$

$$= 135 \text{ kips } (600750 \text{ N})$$

(b). Splice Plate

(Splice plate is 2/3 thickness of rail plate)

$$= (\tfrac{2}{3})(135) = 90 \text{ kips } (400500 \text{ N})$$

c. Summary

This bolted connection is controlled by bearing failure of the splice plate and the rail plate, 23 and 35 kips (102350 and 155750 N) respectively. These are much lower than the rail unit (68 kips (302600 N)) and this should be upgraded to make use of

the rail material. It is also less than the 50 kip (222500 N) tensile strength guideline for guardrail systems. The addition of two more bolts or upgrading to four 0.75-in (0.019-m) bolts will accomplish this requirement. Also the splice plate should be changed to 0.375-in (0.010-m) thick material.

2. BLOCKED-OUT, STEEL-BACKED TIMBER GUARDRAIL

a. Strength of Rail and Splice

Material ASTM A588 (COR-TEN)
Sy = 50 ksi (344500 kPa)
Ssy = 28.9 ksi (199121 kPa)
Rail Thickness = 0.375 in (0.010 m)
Splice Thickness = 0.375 in (0.010 m)

(1). Strength of Rail Plate

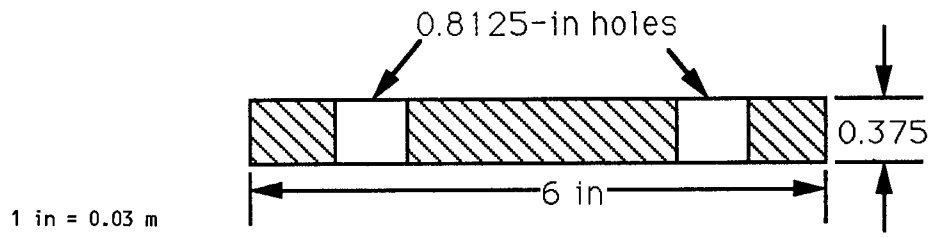

$$\text{Area} = (6)(\tfrac{3}{8}) - (2)[(\tfrac{13}{16})(\tfrac{3}{8})] = 1.64 \text{ in}^2 \ (0.0011 \text{ m}^2)$$

$$P = (Sy)(A) = (1.64)(50 \text{ kips}) = 82 \text{ kips } (364900 \text{ N})$$

(2). Strength of Splice Plate

Same as rail = 82 kips (364900 N)

b. Bolted Connection

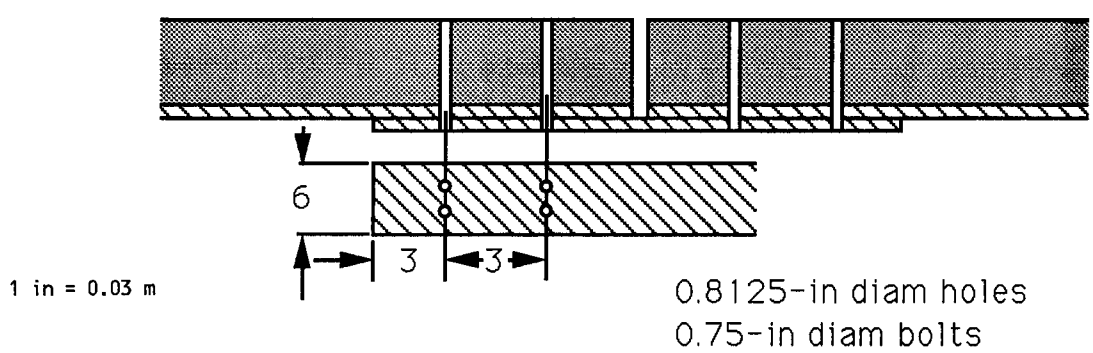

Bolts pass through wood rail, splice and rail plate. Since the bolts can not be tightened to their proof load due to the wood, the clamp load and friction are neglected in this analysis.

Bolts: ASTM A325
Sy = 80 ksi (551200 kPa)
Ssy = (.577)(80) = 46.2

Rail Steel: Sy = 50 ksi (344500 kPa)
Ssy = 28.9 ksi (199.12 kPa)

(1). <u>Bearing Failure of Bolt</u>

(a). Rail Plate

$$\text{sigma} = \frac{P/4}{td} \quad \text{--> } P = 4(t)(d)(\text{sigma}) \qquad \text{where sigma} = Sy$$

$$P = (4)(\tfrac{3}{8})(\tfrac{3}{4})(80 \text{ ksi}) = 90 \text{ kips } (400500 \text{ N})$$

(b). Splice Plate

Same as in rail.

(2). <u>Bearing Failure of Rail Plate</u>

$$P = (4)(\tfrac{3}{8})(\tfrac{3}{4})(50 \text{ ksi}) = 56 \text{ kips } (249200 \text{ N})$$

(3). <u>Bearing Failure of Splice Plate</u>

Same as rail plate.

(4). <u>Shear of Bolts</u>

$$Ssy = \frac{P/4}{A} \qquad \text{and} \qquad A = \frac{(Pi)d^2}{4} = 0.44 \text{ in}^2 \ (0.0003 \text{ m}^2)$$

$$P = \frac{Ssy(4)(Pi)d^2}{4} = (46.2)(.44)(4)$$

$$= 81 \text{ kips } (360450 \text{ N})$$

(5). <u>Tearout</u>

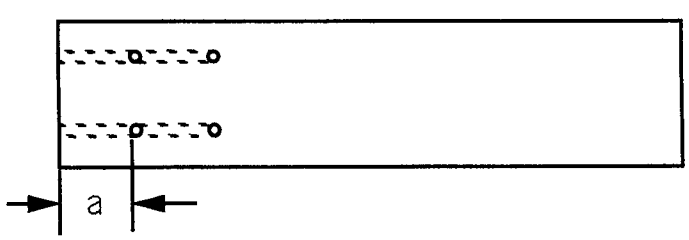

(a). Rail Plate

$$a = 3 - \frac{13}{32} = 2\frac{19}{32}$$

$$t = \frac{3}{8}$$

2 tear lines: $A = 2at = 1.95\ in^2\ (0.0013\ m^2)$

$$Sy = \frac{P/4}{A}$$

$$P = (A)(Ssy)(4)$$

$$= (1.95)(28.9)(4)$$

$$= 225\ kips\ (1001250\ N)$$

(b). Splice Plate

Same as rail.

c. Summary

The bolted connection is good for 56 kips (249200 N) which is very similar to the rail tensile strength. The overall system of rail and splices is good for 56 kips (249200 N), thus making the overall system well designed.

3. STEEL-BACKED LOG GUARDRAIL

a. Strength of Rail and Splice

Material ASTM A588 (COR-TEN)
Sy = 50 ksi (344500 kPa)
Ssy = 28.9 ksi (199121 kPa)
Rail Thickness = 0.3125 in (0.008 m)
Splice Thickness = 0.375 in (0.010 m)

(1). **Strength of Rail Plate**

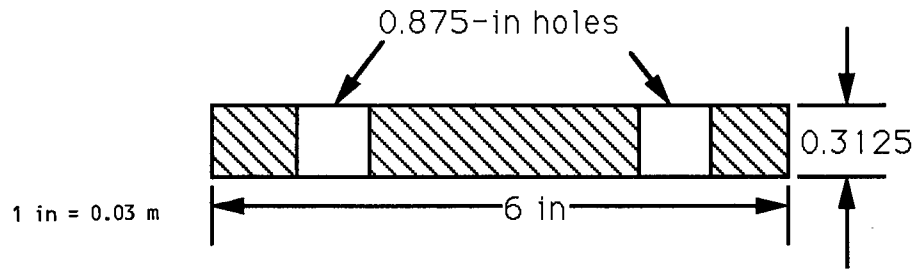

$$A = (6)\left(\frac{5}{16}\right) - (2)\left(\frac{7}{8}\right)\left(\frac{5}{16}\right) = 1.33 \text{ in}^2 \ (0.0009 \text{ m}^2)$$

$$P = (1.33)(50) = 66.3 \text{ kips } (295035 \text{ N})$$

(2). **Strength of Splice Plate**

$$F = (66.3)\frac{(3/8)}{(5/16)} = 79.6 \text{ kips } (354220 \text{ N})$$

b. Bolted Connection

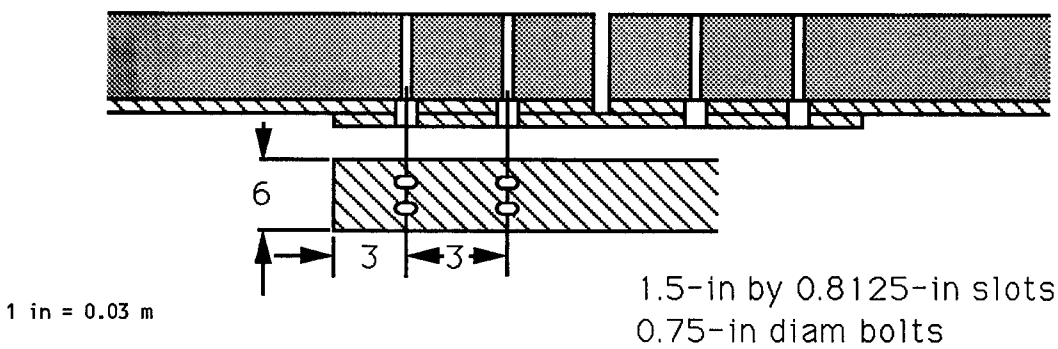

Bolts: ASTM A325
Sy = 80 ksi (551200 kPa)
Ssy = 46.2 ksi (318318 kPa)

(1). **Bearing Failure of Bolt**

(a). **Rail Plate**

$$P = (4)\left(\frac{5}{16}\right)\left(\frac{3}{4}\right)(80 \text{ ksi}) = 75 \text{ kips } (333750 \text{ N})$$

(b). **Splice Plate**

$$P = (75)\frac{(3/8)}{(5/16)} = 90 \text{ kips } (400500 \text{ N})$$

(2). Bearing Failure of Rail Plate

$$P = (4)\left(\frac{5}{16}\right)\left(\frac{3}{4}\right)(50 \text{ ksi}) = 47 \text{ kips } (209150 \text{ N})$$

(3). Bearing Failure of Splice Plate

$$P = (46.9)\frac{(3/8)}{(5/16)} = 30 \text{ kips } (133500 \text{ N})$$

(4). Shear of Bolts

$$Ssy = \frac{P/4}{A} \quad \text{and} \quad A = \frac{(Pi)d^2}{4} = 0.44 \text{ in}^2 \ (0.0003 \text{ m}^2)$$

$$P = \frac{Ssy(4)(Pi)d^2}{4} = (46.2)(.44)(4)$$

$$= 81 \text{ kips } (360450 \text{ N})$$

(5). Tearout

(a). Rail Plate

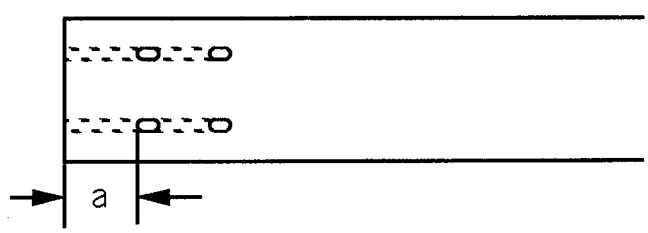

$$Ssy = \frac{P/4}{A} \quad \text{and} \quad a = 3 - \left(\frac{3}{4}\right) = 2\frac{1}{4}$$

$$t = 5/16$$

2 tear lines
$A = 2at = 1.41 \text{ in}^2 \ (0.0009 \text{ m}^2)$

$$P = (4)(Ssy)(A)$$

$$= (4)(28.9)(1.41)$$

$$= 163 \text{ kips } (725350 \text{ N})$$

(b). Splice Plate

$$P = (162)\frac{(3/8)}{(5/16)} = 194 \text{ kips } (863300 \text{ N})$$

c. Summary

The weak link is the bearing failure of the rail plate but all strengths are approximately 50 kips (222500 N) or above. This design is considered to be overall good design.

APPENDIX C - REMOVEABLE GUARDRAIL SYSTEM DESIGN DRAWINGS

The drawings for the designs discussed in task C, subsection 7 - Removeable Guardrail System Design, are presented in this appendix. The following tables list the drawing numbers and titles.

Post to ground attachment concept drawing numbers.

Drawing Number	Title
1818-B-15-()	Slide Base
1818-B-16	One Side Latch
1818-B-17-()	Lug Lock
1818-B-18-()	Pandrol Clip
1818-B-19	Dual Bolt Clip
1818-B-20	Key Lock
1818-B-25	Rotate Lock

Rail to post connection concept drawing numbers.

Drawing Number	Title
1818-B-21-1	Pin Link
1818-B-21-2	Pin Link with W10x15 backup
1818-B-21-3	Pin Link with angle backup
1818-B-22	Vertical Pin
1818-B-23	Insert and Pin
1818-B-24	Slip Joint

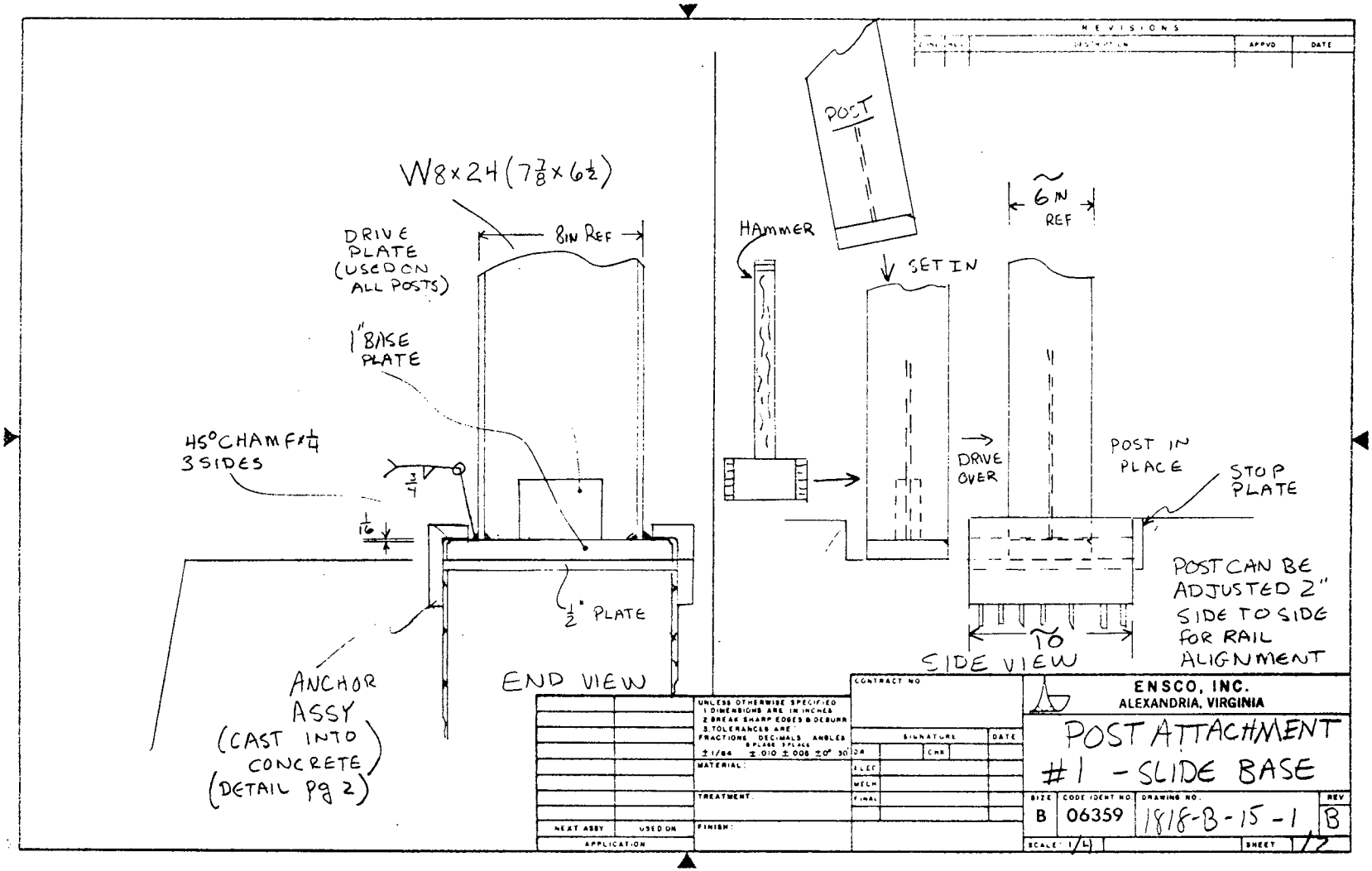
W8x24 (7 7/8 x 6 1/2)
8IN REF
DRIVE PLATE (USED ON ALL POSTS)
1" BASE PLATE
45° CHAMF x 4 3 SIDES
3/4
1/16
1/2" PLATE
ANCHOR ASSY (CAST INTO CONCRETE) (DETAIL Pg 2)
END VIEW
HAMMER
POST
SET IN
DRIVE OVER
~6 IN REF
POST IN PLACE
STOP PLATE
TO
SIDE VIEW
POST CAN BE ADJUSTED 2" SIDE TO SIDE FOR RAIL ALIGNMENT
REVISIONS
APPVD
DATE
UNLESS OTHERWISE SPECIFIED
1. DIMENSIONS ARE IN INCHES
2. BREAK SHARP EDGES & DEBURR
3. TOLERANCES ARE
FRACTIONS DECIMALS ANGLES
2 PLACE 3 PLACE
±1/64 ±.010 ±.005 ±0° 30'
MATERIAL:
TREATMENT:
FINISH:
NEXT ASSY
USED ON
APPLICATION
CONTRACT NO
SIGNATURE
DATE
DR
CHK
ELEC
MECH
FINAL
ENSCO, INC.
ALEXANDRIA, VIRGINIA
POST ATTACHMENT
#1 - SLIDE BASE
SIZE
B
CODE IDENT NO.
06359
DRAWING NO.
1818-B-15-1
REV
B
SCALE 1/4
SHEET 1/2

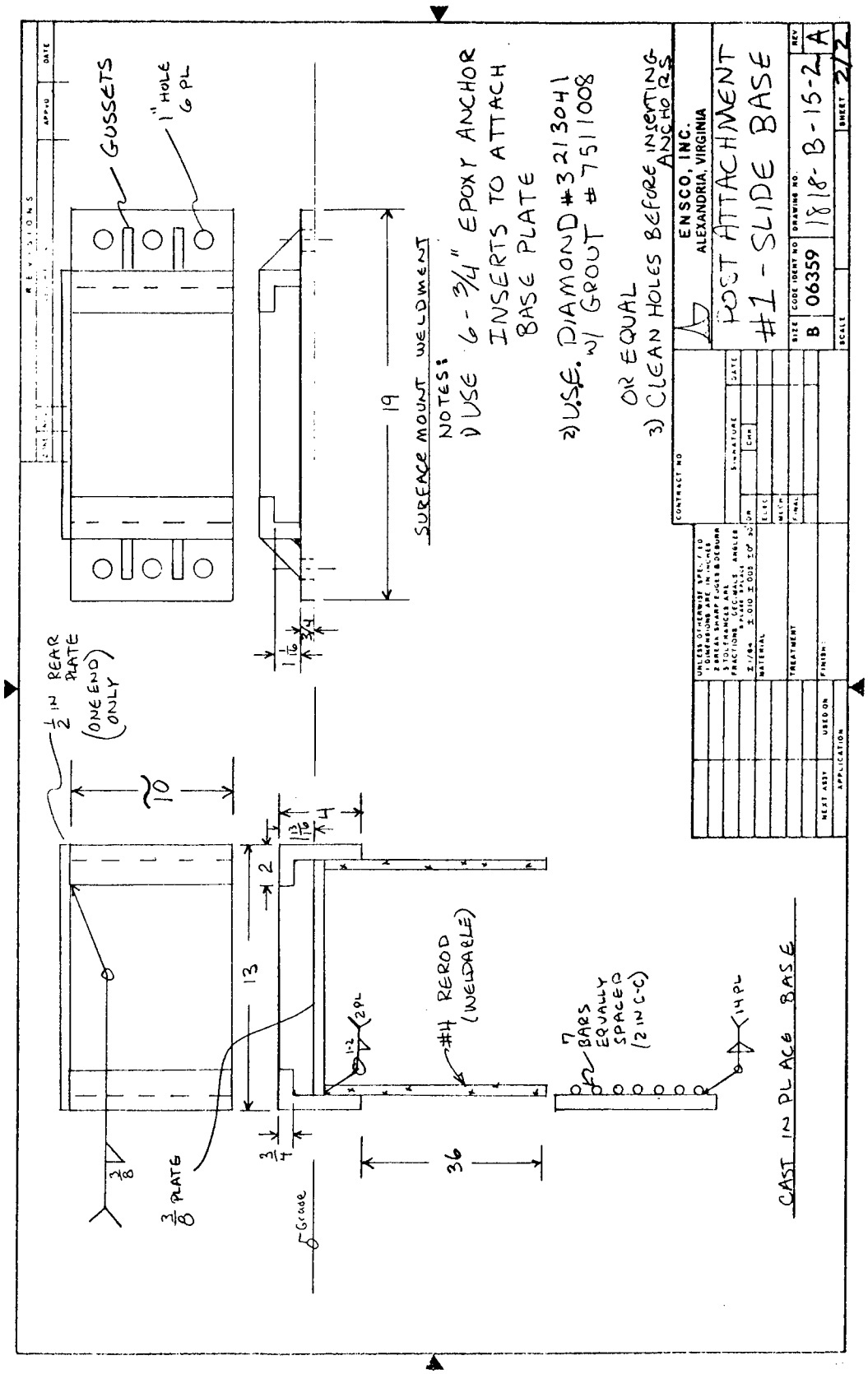
GUSSETS
1" HOLE 6 PL
SURFACE MOUNT WELDMENT
NOTES:
1) USE 6-3/4" EPOXY ANCHOR INSERTS TO ATTACH BASE PLATE
2) U.S.E. DIAMOND #3213041 W/ GROUT #7511008 OR EQUAL
3) CLEAN HOLES BEFORE INSERTING ANCHORS
ENSCO, INC.
ALEXANDRIA, VIRGINIA
POST ATTACHMENT #1 - SLIDE BASE
B
06359
1818-B-15-2
A
2/2
1/2 IN REAR PLATE (ONE END ONLY)
#4 REROD (WELDABLE)
7 BARS EQUALLY SPACED (2 IN C-C)
3/8 PLATE
CAST IN PLACE BASE
19
10
13
36
2
4
3/4
1 1/16
3/8
Grade

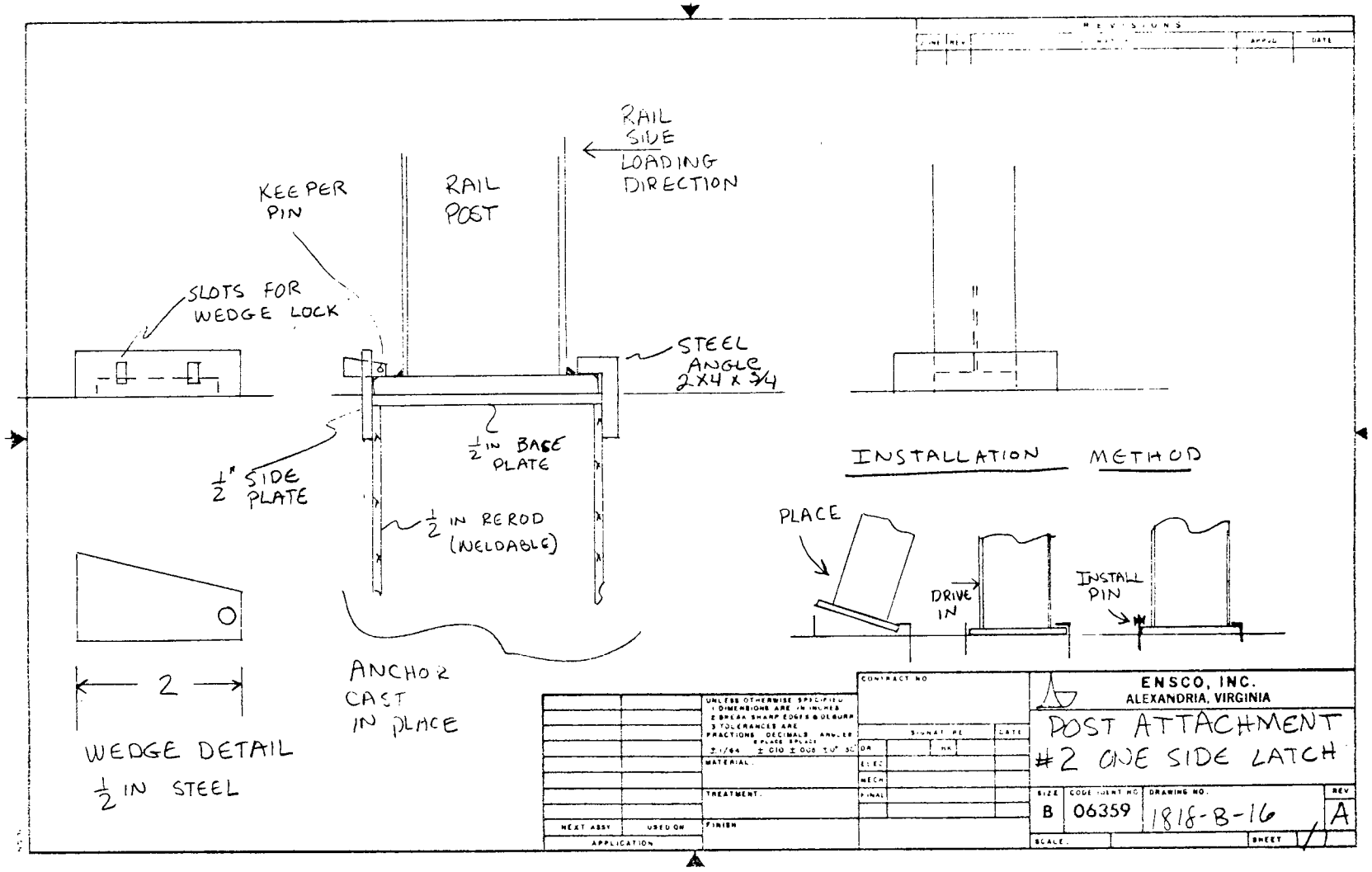
RAIL SIDE LOADING DIRECTION
KEEPER PIN
RAIL POST
SLOTS FOR WEDGE LOCK
STEEL ANGLE 2X4 X 3/4
1/2 IN BASE PLATE
1/2" SIDE PLATE
1/2 IN REROD (WELDABLE)
ANCHOR CAST IN PLACE
2
WEDGE DETAIL
1/2 IN STEEL
INSTALLATION METHOD
PLACE
DRIVE IN
INSTALL PIN
ENSCO, INC.
ALEXANDRIA, VIRGINIA
POST ATTACHMENT
#2 ONE SIDE LATCH
B
06359
1818-B-16
A

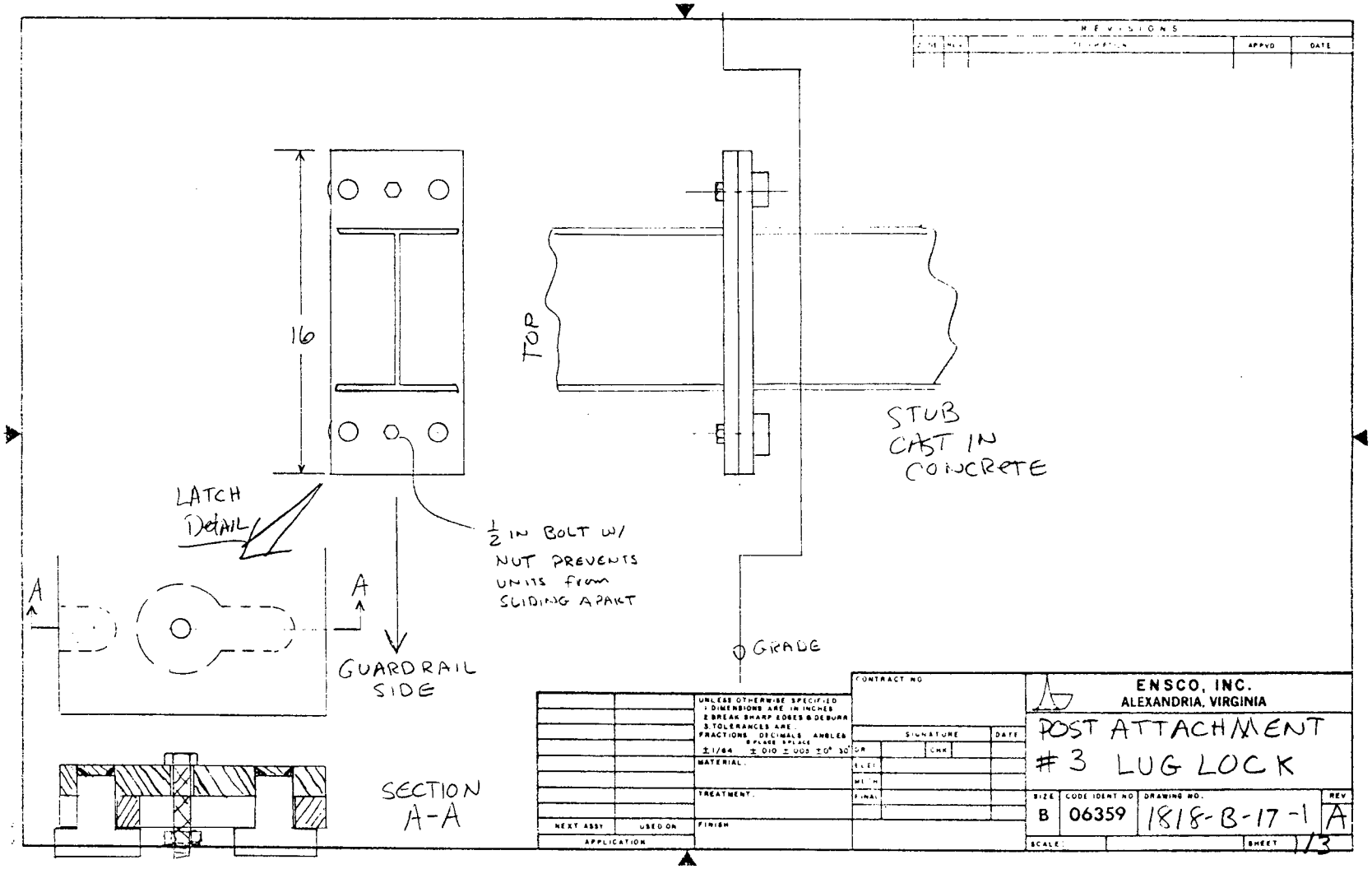
REVISIONS
APPVD
DATE
16
TOP
STUB
CAST IN
CONCRETE
LATCH
DETAIL
A
A
GUARDRAIL
SIDE
1/2 IN BOLT W/
NUT PREVENTS
UNITS from
SLIDING APART
GRADE
SECTION
A-A
UNLESS OTHERWISE SPECIFIED
1 DIMENSIONS ARE IN INCHES
2 BREAK SHARP EDGES & DEBURR
3 TOLERANCES ARE:
FRACTIONS DECIMALS ANGLES
± 1/64 ± .010 ± .005 ± 0° 30'
MATERIAL
TREATMENT
FINISH
NEXT ASSY
USED ON
APPLICATION
CONTRACT NO
SIGNATURE
DATE
DR
CHK
ENSCO, INC.
ALEXANDRIA, VIRGINIA
POST ATTACHMENT
#3 LUG LOCK
SIZE
B
CODE IDENT NO
06359
DRAWING NO.
1818-B-17-1
REV
A
SCALE
SHEET
1/3

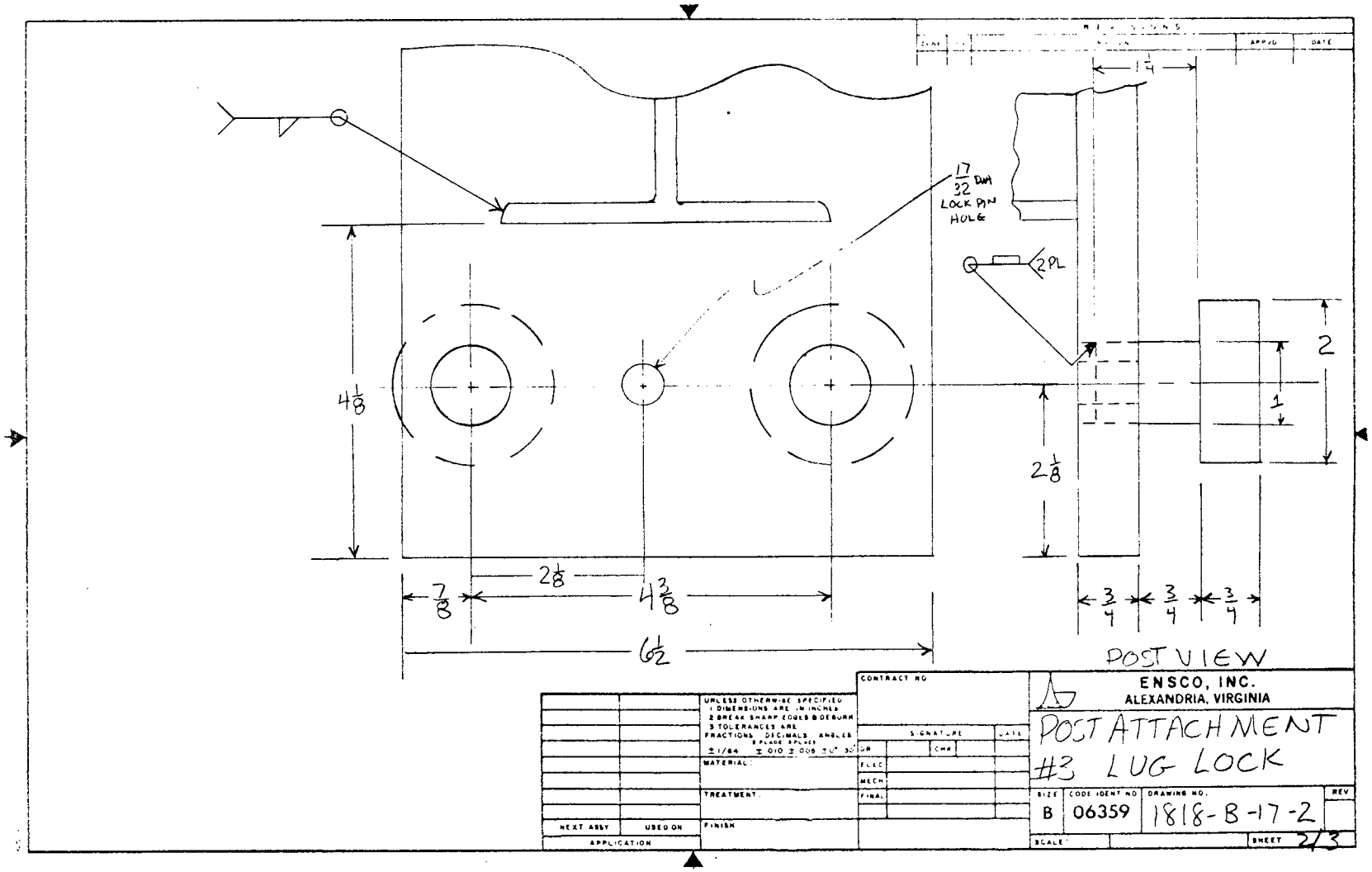
17/32 DIA LOCK PIN HOLE
2PL
4 1/8
2 1/8
7/8
2 1/8
4 3/8
6 1/2
1/4
2
1
3/4
3/4
3/4
POST VIEW
ENSCO, INC.
ALEXANDRIA, VIRGINIA
POST ATTACHMENT #3 LUG LOCK
B
06359
1818-B-17-2
2/3

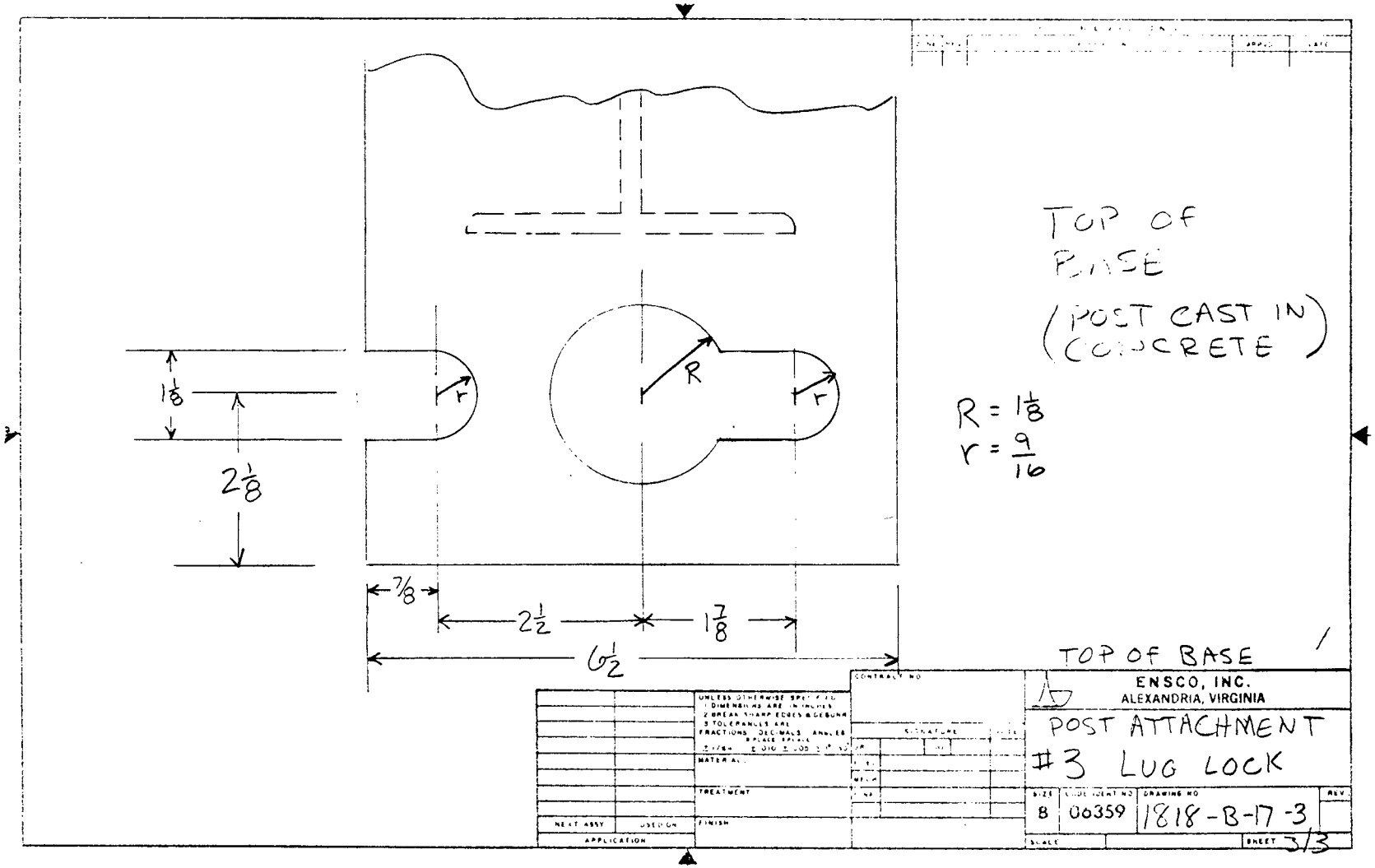
TOP OF BASE
(POST CAST IN CONCRETE)
R = 1 1/8
r = 9/16
R
r
r
1 1/8
2 1/8
7/8
2 1/2
1 7/8
6 1/2
TOP OF BASE
ENSCO, INC.
ALEXANDRIA, VIRGINIA
POST ATTACHMENT
#3 LUG LOCK
SIZE B
CODE IDENT NO 06359
DRAWING NO 1818-B-17-3
SHEET 3/3
UNLESS OTHERWISE SPECIFIED
1 DIMENSIONS ARE IN INCHES
2 BREAK SHARP EDGES & DEBURR
3 TOLERANCES ARE
FRACTIONS DECIMALS ANGLES
MATERIAL
TREATMENT
FINISH
NEXT ASSY
USED ON
APPLICATION
CONTRACT NO
SIGNATURE
WEIGHT
SCALE

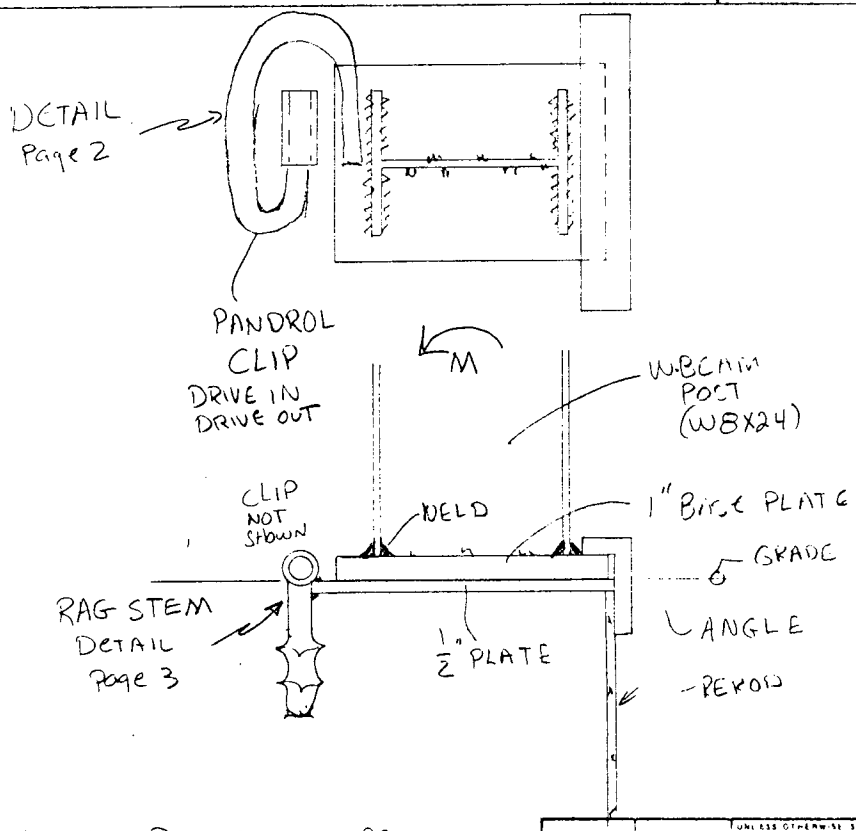

CLIP SOURCE

PANDROL, INC
PO BOX 367
505 SHARPTOWN RD
BRIDGEPORT NJ 08014

PHONE 609 467 3227
FAX 609 467 2994
GARY HINES

NOTE: PANDROL CLIPS ARE USED TO FASTEN RAILROAD RAIL TO TIES, BOTH CONCRETE AND WOOD.

ENSCO, INC.
ALEXANDRIA, VIRGINIA

POST ATTACHMENT
#4 PANDROL CLIP

SIZE	CODE IDENT NO	DRAWING NO.	REV
B	06359	1818-B-18-1	A

SCALE | SHEET 1/3

Concrete Tie Assembly Components

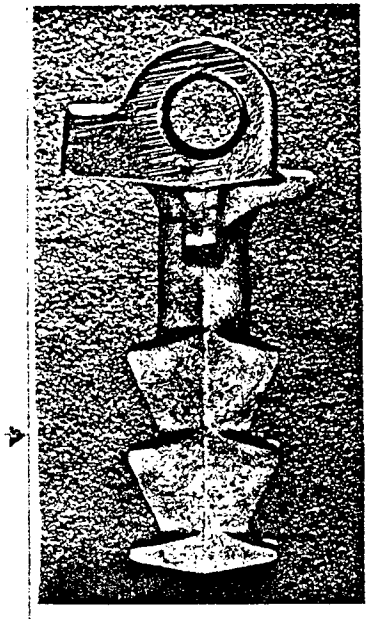

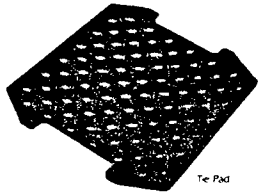

Tie Pad

GRN Insulator

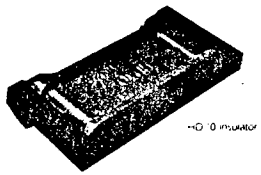

HD-10 Insulator

Pandrol concrete tie assembly components (rag stem shoulder, insulator and tie pad) function as an integral unit in securely fastening rails to ties.

The Pandrol "Rag Stem" shoulder is an improved design made from either ductile or malleable iron. It offers a clip retaining ridge and has a pullout resistance of approximately 24 tons.

Pandrol offers tie pads in varying thicknesses and materials designed to meet specific service conditions. The pads are "H" shaped to fit the shoulder, assuring proper location during installation.

Pandrol offers two types of insulator: the GRN for normal service conditions and the HD-10 for heavy duty service with a clip location ridge to aid in proper clip installation.

When used in conjunction with Pandrol brand rail clips these components assure precise lateral rail location, secure fastening, and high resistance insulation for track circuiting purposes.

RAG STEM SHOULDER

- Made from high quality malleable or ductile cast iron
- Approximate shipping weight: 3.5 lbs
- Additional designs and drawings are available upon request

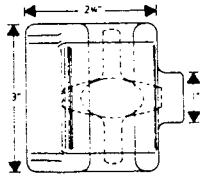

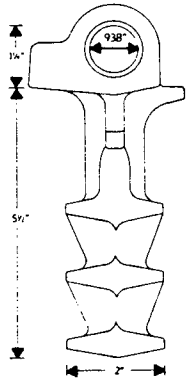

Pandrol Incorporated
P.O. Box 44, 505 Sharptown Road
Bridgeport, New Jersey 08014
(609) 467-3227

Pandrol Canada Limited
8180 Cote de Liesse Road
Montreal, P.Q.

UNLESS OTHERWISE SPECIFIED
DIMENSIONS ARE IN INCHES
BREAK SHARP EDGES & BURRS
TOLERANCES ARE
FRACTIONS DECIMALS ANGLES
MATERIAL
TREATMENT
FINISH
NEXT ASSY | USED ON
APPLICATION

ENSCO, INC.
ALEXANDRIA, VIRGINIA

POST ATTACHMENT
#4 PANDROL DETAIL

SIZE	CODE IDENT NO	DRAWING NO	REV
B	06359	1818-B-18-2	A

SCALE | SHEET 2/3

"e" series clip

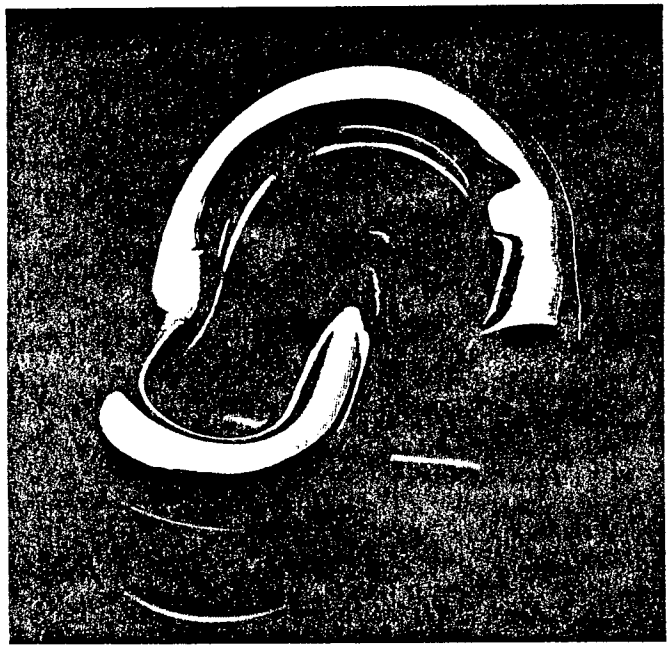

The "e" series clip with its unique geometric design offers a light weight, low cost rail fastener. The "e" series clip installs easily manually or mechanically and provides a high clamping force (See chart on back). Working deflection compensates for normal manufacturing tolerances and component wear. The 2000 series "e" clip is fully compatible with all Pandrol 600 series housings.

SPECIFICATIONS:

- Made from high quality spring steel bar stock
- Bar diameter 20 mm ("e" 2000 series)
- Approximate shipping weight: 1.7 lbs
- Normally packed 50 per bag

The "e" clip design utilizes the "free end" to bear on the rail foot. This "end" is flattened to provide a large bearing area on the rail or insulator

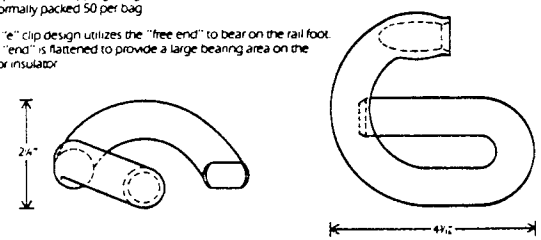

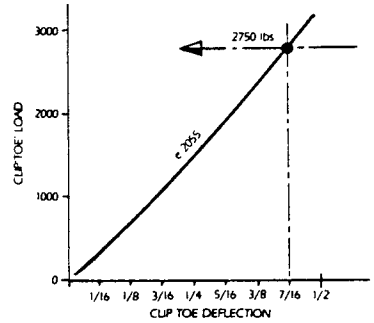

Clip	"e" 2000
Bar Diameter	20 mm
Nominal Toe Load	2,750 lbs.
Working Deflection	7/16"
Nominal Rail Seat Clamping Force	5,500 lbs
Surface area in contact with insulator or rail	82 sq. in

Pandrol Incorporated
P. O. Box 367 505 Sharptown Road
Bridgeport, New Jersey 08014
(609) 467-3227
FAX (609) 467-2994

UNLESS OTHERWISE SPECIFIED
1 DIMENSIONS ARE IN INCHES
2 BREAK SHARP EDGES & DEBURR
3 TOLERANCES ARE
FRACTIONS DECIMALS ANGLES
± 1/64 ± .010 ± .005 ± 1/2°
MATERIAL
TREATMENT
FINISH
NEXT ASSY | USED ON
APPLICATION

ENSCO, INC.
ALEXANDRIA, VIRGINIA

POST ATTACHMENT
#4 PANDROL DETAIL

SIZE	CODE IDENT NO.	DRAWING NO.	REV
B	06359	1870-B-18-3	A

SCALE | SHEET 3/3

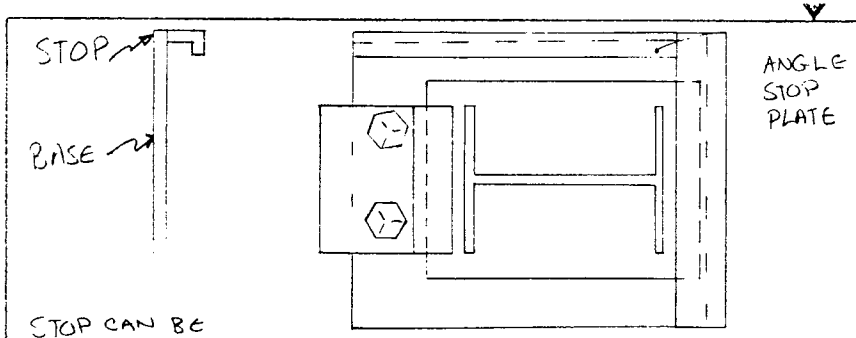

STOP CAN BE INSTALLED ON BOTH SIDES IF REQUIRED

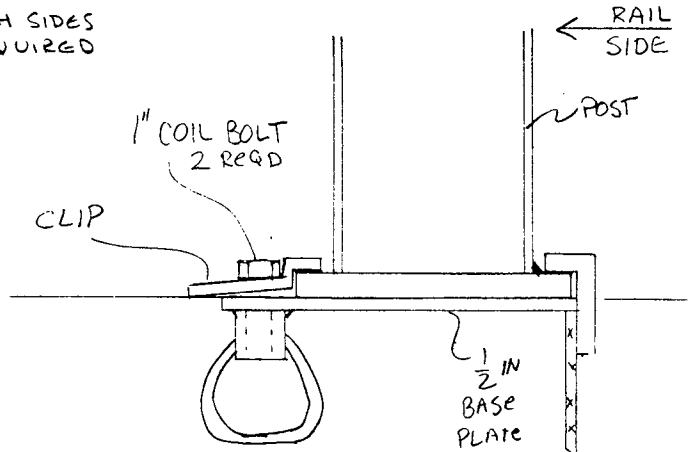

COIL BOLT INSERT (SINGLE FLARED COIL LOOP INSERT)

COIL BOLT

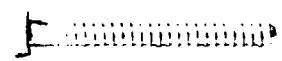

1" BOLT RATED AT 24 KIPS

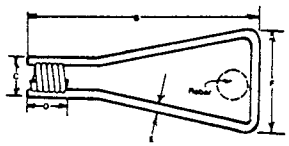

Safe working load at 4.0 to 1.0 safety factor

SINGLE FLARED COIL LOOP INSERTS

Dia.	Dimensions B	C	D	E	Approx. F	Safe Working Load*	Concrete Strength P.S.I.	Ultimate Mechanical Strength
1/2"	4"	1 9/16"	1 9/16"	225	3"	2,250 lbs.	2,000	9,000 lbs.
1/2"	6"	1 9/16"	1 9/16"	225	3 1/2"	2,250 lbs.	2,000	9,000 lbs.
3/4"	6"	1 3/4"	1 9/16"	306	4 1/2"	3,750 lbs.	2,000	13,500 lbs.
3/4"	9"	1 3/4"	1 9/16"	306	5 1/2"	3,750 lbs.	2,000	13,500 lbs.
3/4"	12"	1 3/4"	1 9/16"	306	5 1/2"	3,750 lbs.	2,000	13,500 lbs.
3/4" (H)	9"	1 3/4"	1 9/16"	375	5 1/2"	4,500 lbs.	2,000	18,000 lbs.
3/4" (H)	12"	1 3/4"	1 9/16"	375	5 1/2"	4,500 lbs.	2,000	18,000 lbs.
1"	9"	2"	2"	375	5 1/2"	4,500 lbs.	2,000	18,000 lbs.
1"	12"	2"	2"	375	5 1/2"	4,500 lbs.	2,000	18,000 lbs.
1" (H)	9"	2 1/4"	2"	440	5 3/4"	6,750 lbs.	2,000	27,000 lbs.
1" (H)	12"	2 1/4"	2"	440	5 3/4"	6,750 lbs.	2,000	27,000 lbs.
1 1/4"	12"	2 3/4"	2"	375	5 1/2"	4,500 lbs.	2,000	18,000 lbs.
1 1/4" (H)	12"	2 1/2"	2"	440	5 3/4"	6,750 lbs.	2,000	27,000 lbs.
1 1/2"	12"	2 3/4"	2 9/16"	440	5 3/4"	6,750 lbs.	2,000	27,000 lbs.

SOURCE VIMCO MANUFACTURING
300 HANSEN ACCESS RD
KING OF PRUSSIA, PA 19406
PH # (215) 768 0500

UNLESS OTHERWISE SPECIFIED 1 DIMENSIONS ARE IN INCHES 2 BREAK SHARP EDGES & DEBURR 3 TOLERANCES ARE FRACTIONS DECIMALS ANGLES 6 PLACE 3 PLACE ± 1/64 ± .010 ± .005 ± 0°	CONTRACT NO	ENSCO, INC. ALEXANDRIA, VIRGINIA	
MATERIAL	SIGNATURE	POST ATTACHMENT #5, DUAL BOLT CLIP	
TREATMENT		SIZE B · CODE IDENT NO 06359 · DRAWING NO. 1818-B-19	REV B
FINISH		SCALE	SHEET
NEXT ASSY · USED ON · APPLICATION			

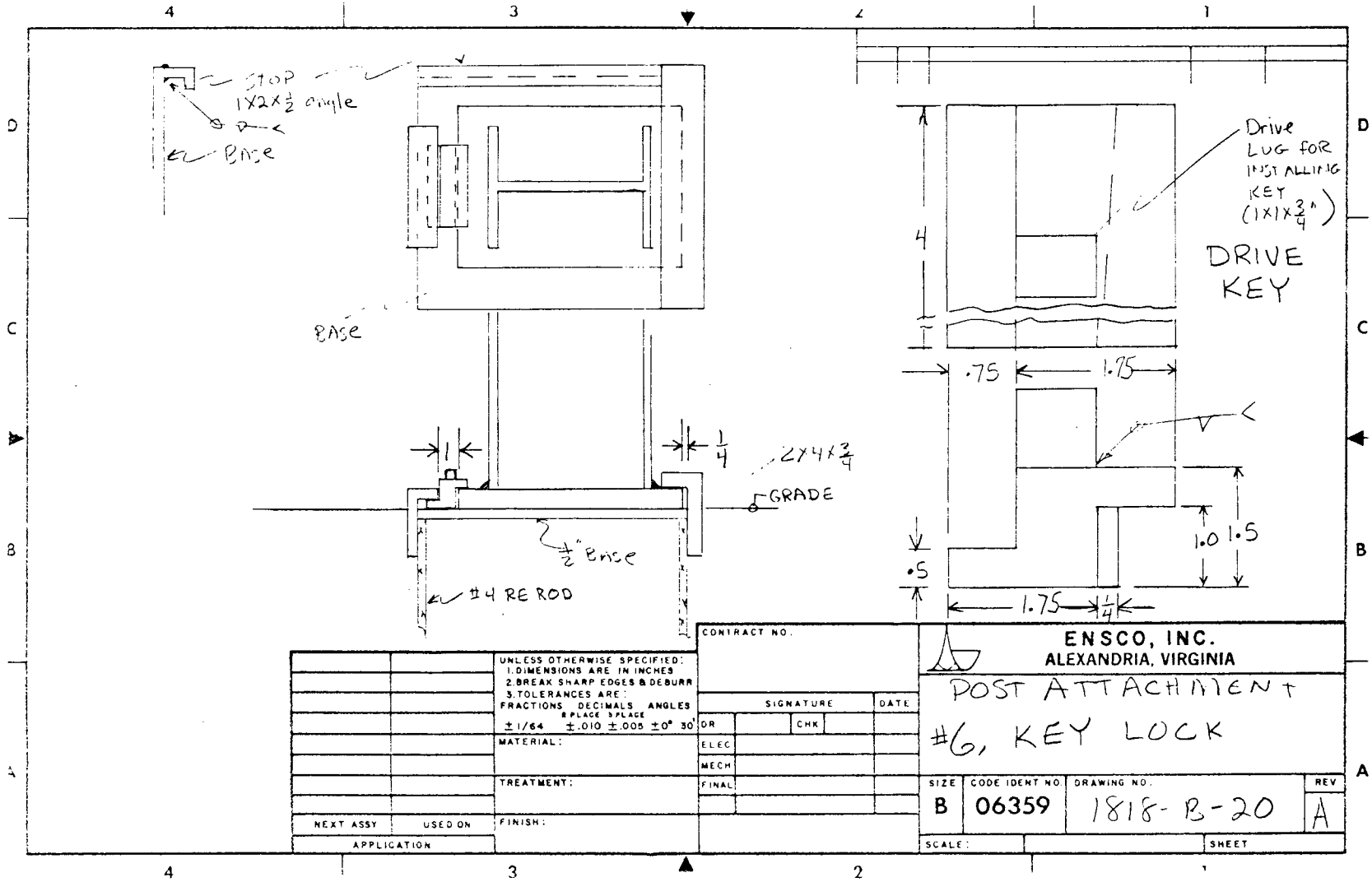
STOP
1X2X1/2 angle
Base
Base
1
1/4
2X4X3/4
GRADE
1/2" Base
#4 RE ROD
Drive LUG FOR INSTALLING KEY (1X1X3/4")
DRIVE KEY
4
.75
1.75
1.0
1.5
.5
1.75
1/4
UNLESS OTHERWISE SPECIFIED:
1. DIMENSIONS ARE IN INCHES
2. BREAK SHARP EDGES & DEBURR
3. TOLERANCES ARE:
FRACTIONS ±1/64 DECIMALS 2 PLACE ±.010 3 PLACE ±.005 ANGLES ±0° 30'
MATERIAL:
TREATMENT:
FINISH:
NEXT ASSY
USED ON
APPLICATION
CONTRACT NO.
SIGNATURE
DATE
DR
CHK
ELEC
MECH
FINAL
ENSCO, INC.
ALEXANDRIA, VIRGINIA
POST ATTACHMENT
#6, KEY LOCK
SIZE B
CODE IDENT NO. 06359
DRAWING NO. 1818-B-20
REV A
SCALE:
SHEET

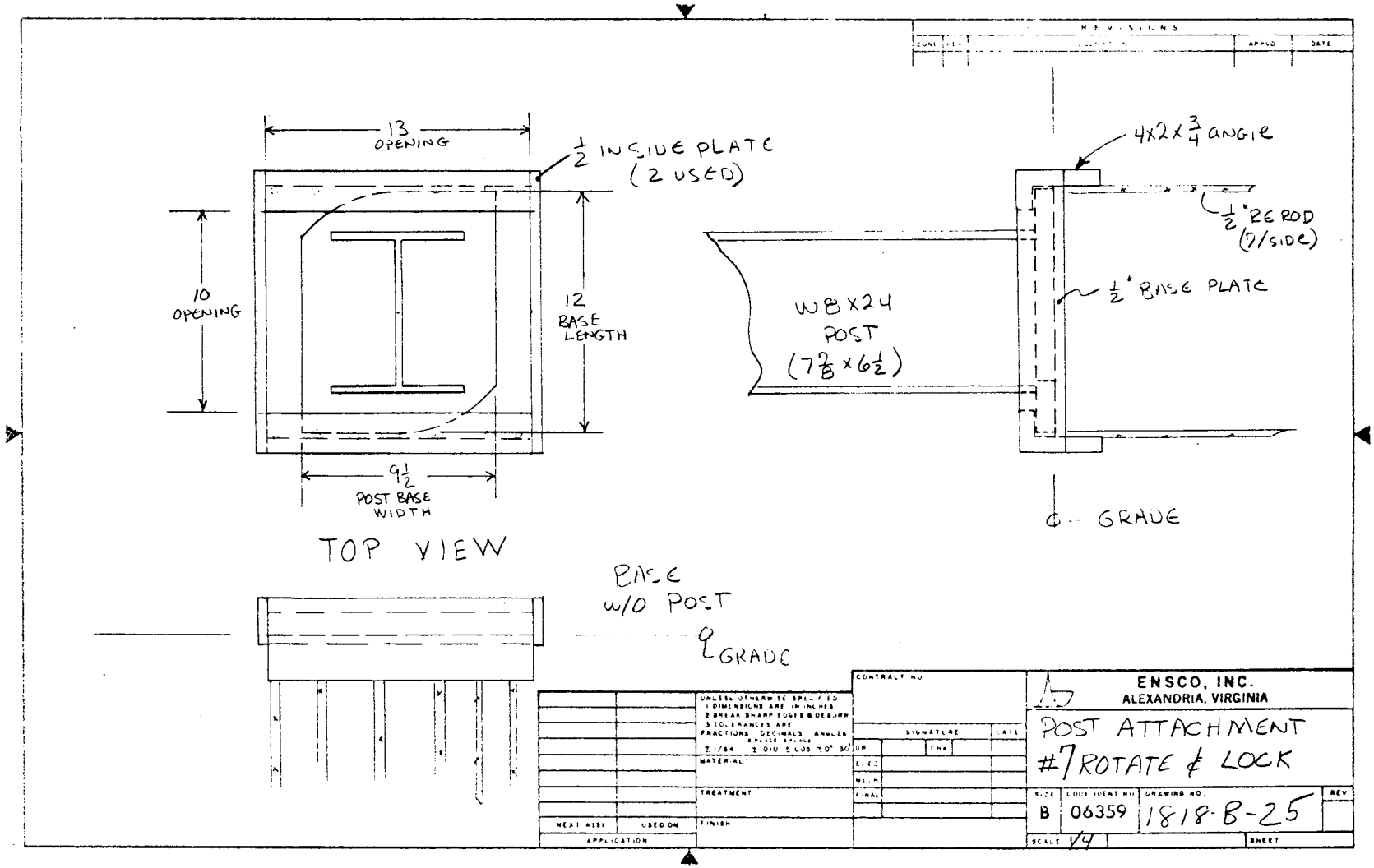
13
OPENING
1/2 INSIDE PLATE
(2 USED)
10
OPENING
12
BASE
LENGTH
9 1/2
POST BASE
WIDTH
TOP VIEW
W8X24
POST
(7 7/8 X 6 1/2)
4X2X3/4 ANGLE
1/2" RE ROD
(7/SIDE)
1/2" BASE PLATE
℄ GRADE
BASE
W/O POST
℄ GRADE
ENSCO, INC.
ALEXANDRIA, VIRGINIA
POST ATTACHMENT
#7 ROTATE & LOCK
B
06359
1818-B-25
1/4

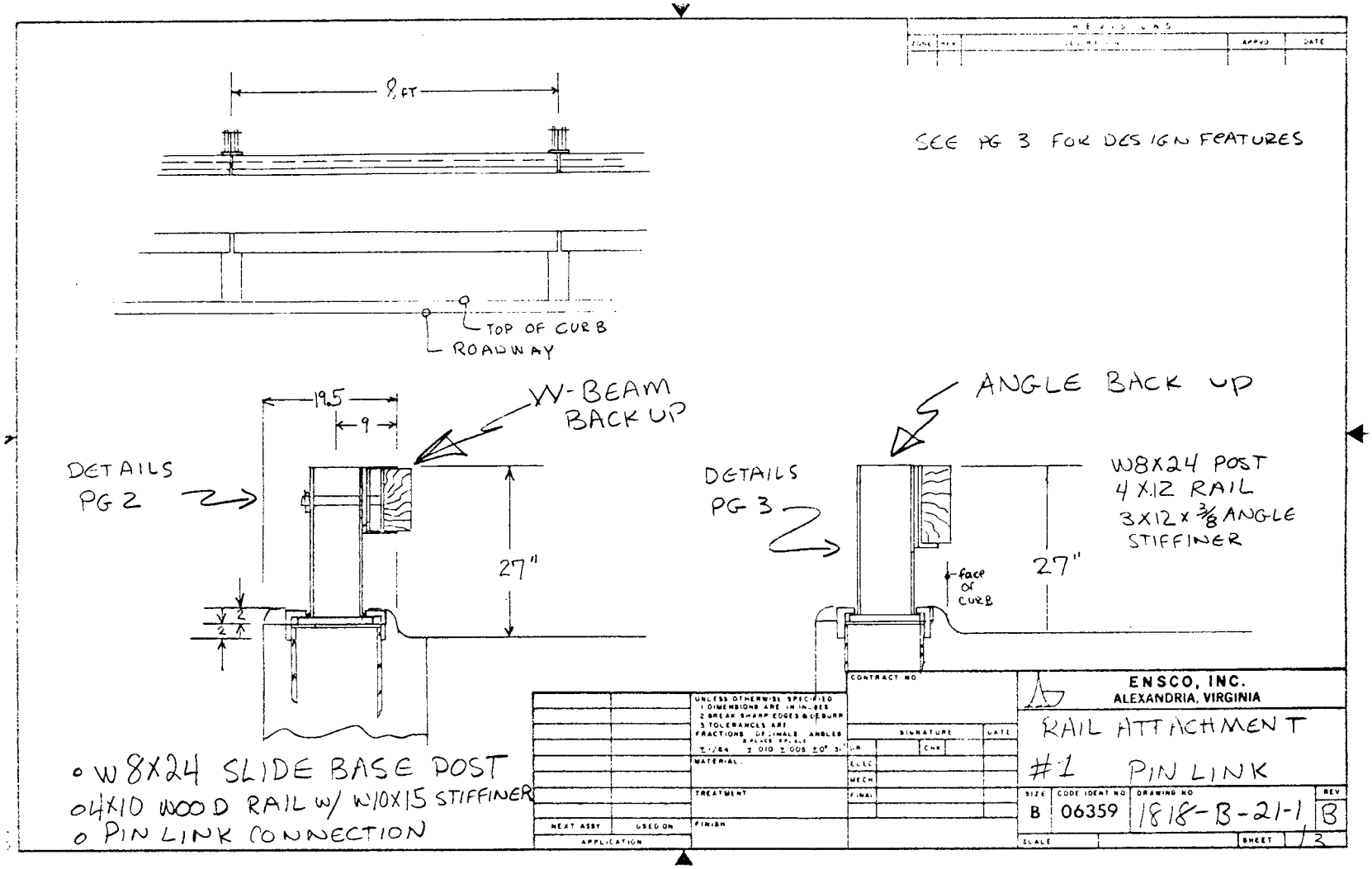
8 FT
TOP OF CURB
ROADWAY
SEE PG 3 FOR DESIGN FEATURES
19.5
9
W-BEAM BACK UP
DETAILS PG 2
27"
2
2
ANGLE BACK UP
DETAILS PG 3
W8X24 POST
4X12 RAIL
3X12 X 3/8 ANGLE STIFFINER
face of curb
27"
o W8X24 SLIDE BASE POST
o 4X10 WOOD RAIL w/ W10X15 STIFFINER
o PIN LINK CONNECTION
ENSCO, INC.
ALEXANDRIA, VIRGINIA
RAIL ATTACHMENT
#1 PIN LINK
SIZE B
CODE IDENT NO 06359
DRAWING NO 1818-B-21-1
REV B
SHEET 1/3

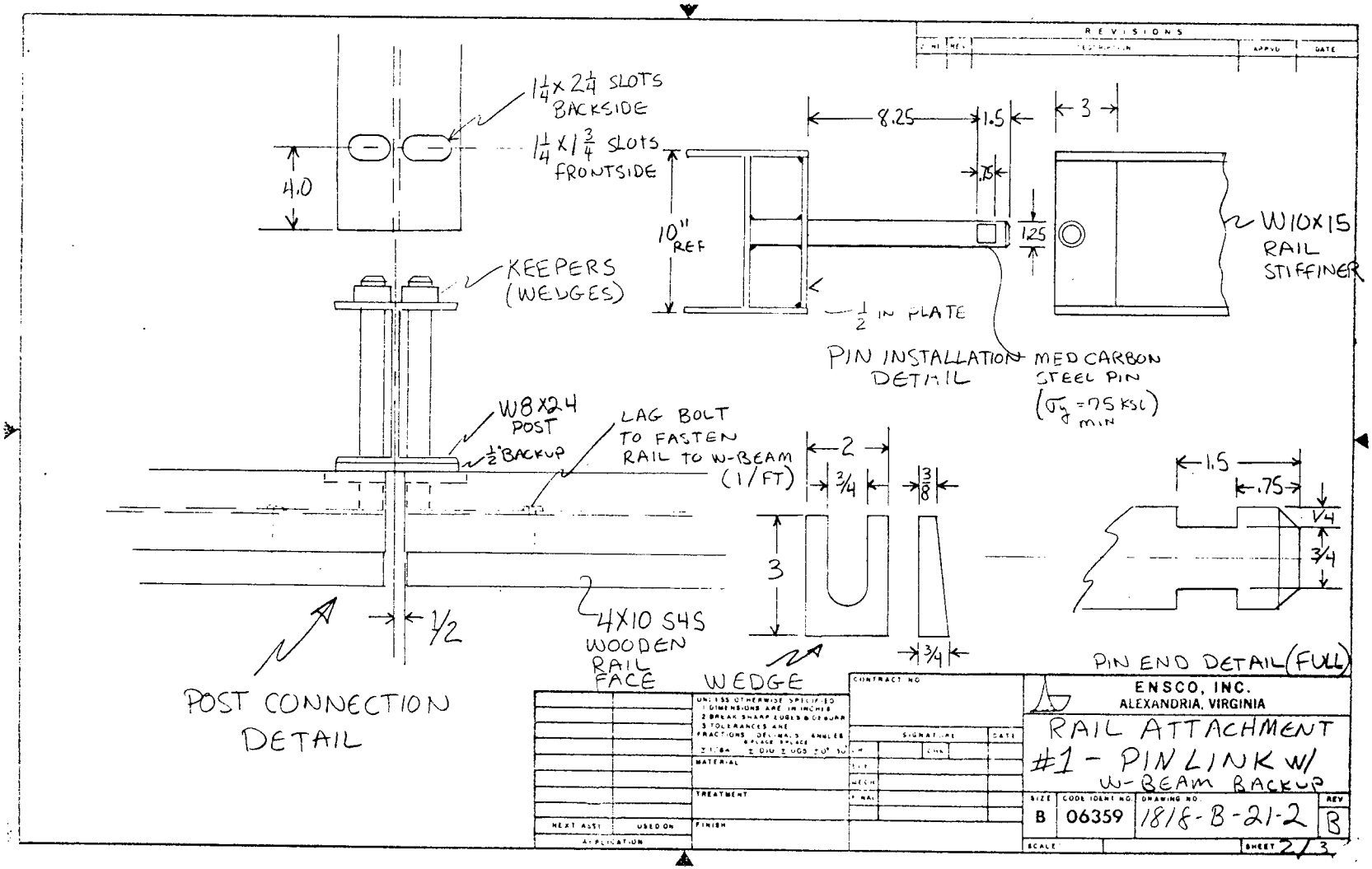
1¼ x 2¼ SLOTS BACKSIDE
1¼ x 1¾ SLOTS FRONTSIDE
4.0
KEEPERS (WEDGES)
W8x24 POST
½" BACKUP
LAG BOLT TO FASTEN RAIL TO W-BEAM (1/FT)
4x10 S4S WOODEN RAIL FACE
½
POST CONNECTION DETAIL
10" REF
8.25
1.5
.75
1.25
½ IN PLATE
PIN INSTALLATION DETAIL
MED CARBON STEEL PIN (σ_y = 75 KSI MIN)
3
W10x15 RAIL STIFFINER
2
¾
⅜
3
¾
WEDGE
1.5
.75
¼
¾
PIN END DETAIL (FULL)
REVISIONS
CONTRACT NO
UNLESS OTHERWISE SPECIFIED
1 DIMENSIONS ARE IN INCHES
2 BREAK SHARP EDGES & DEBURR
3 TOLERANCES ARE
FRACTIONS DECIMALS ANGLES
MATERIAL
TREATMENT
FINISH
NEXT ASSY
USED ON
APPLICATION
SIGNATURE
DATE
ENSCO, INC.
ALEXANDRIA, VIRGINIA
RAIL ATTACHMENT
#1 - PIN LINK W/
W-BEAM BACKUP
SIZE
B
CODE IDENT NO.
06359
DRAWING NO.
1818-B-21-2
REV
B
SCALE
SHEET 2/3

DESIGN FEATURES

W-BEAM : 1- STRONGER BACKUP
2- STANDARD SHAPE
3- SMALLER PROFILE (10" BEAM HEIGHT)
4- ≈3" BLOCKOUT MOUNT

ANGLE : 1- LARGER RAIL ELEMENT (12" RAIL)
2- NO BLOCKOUT → LESS ROADWAY USED BY RAIL
3- WEAKER BACKUP

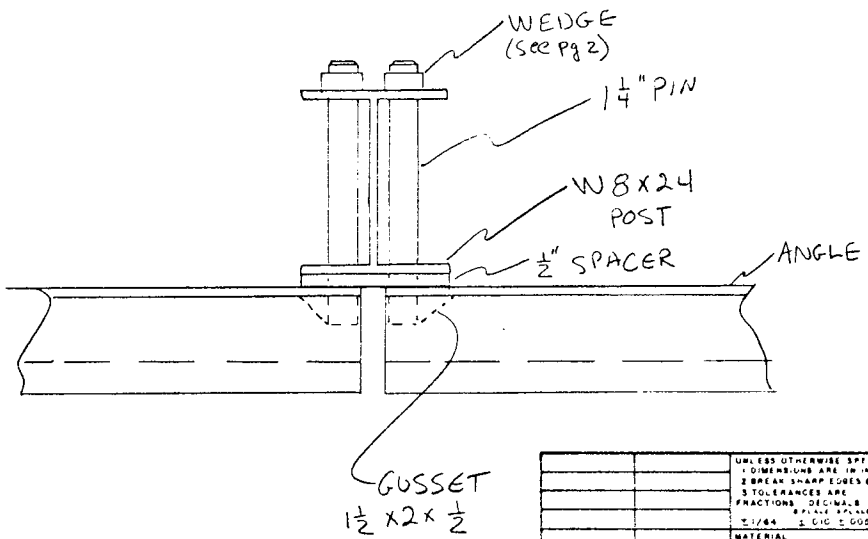

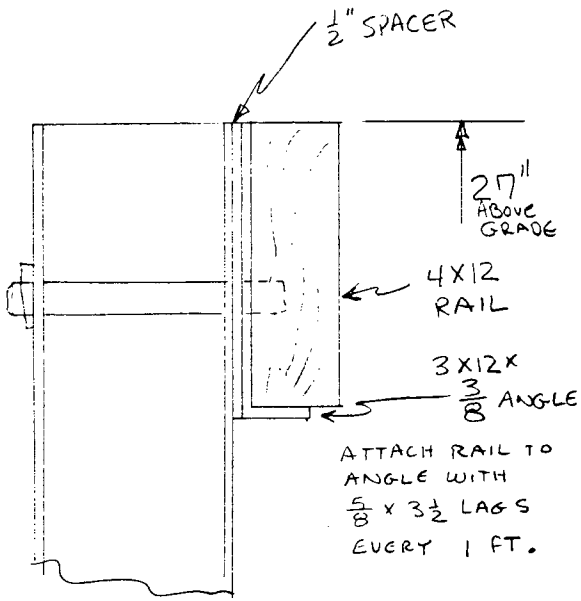

REVISIONS

SYMB	REV	DESCRIPTION	APPVD	DATE

UNLESS OTHERWISE SPECIFIED
1. DIMENSIONS ARE IN INCHES
2. BREAK SHARP EDGES & DEBURR
3. TOLERANCES ARE
FRACTIONS DECIMALS ANGLES
± 1/64 ± .010 ± .005 ± 0°30'

MATERIAL

TREATMENT

FINISH

NEXT ASSY | USED ON

APPLICATION

CONTRACT NO

	SIGNATURE	DATE
DRN		
CHK		
ELEC		
MECH		
F. NAL		

ENSCO, INC.
ALEXANDRIA, VIRGINIA

RAIL ATTACHMENT
#1- PINLINK w/ ANGLE BACK UP

SIZE	CODE IDENT NO.	DRAWING NO.	REV
B	06359	1818-B-21-3	B

SCALE | SHEET 3/3

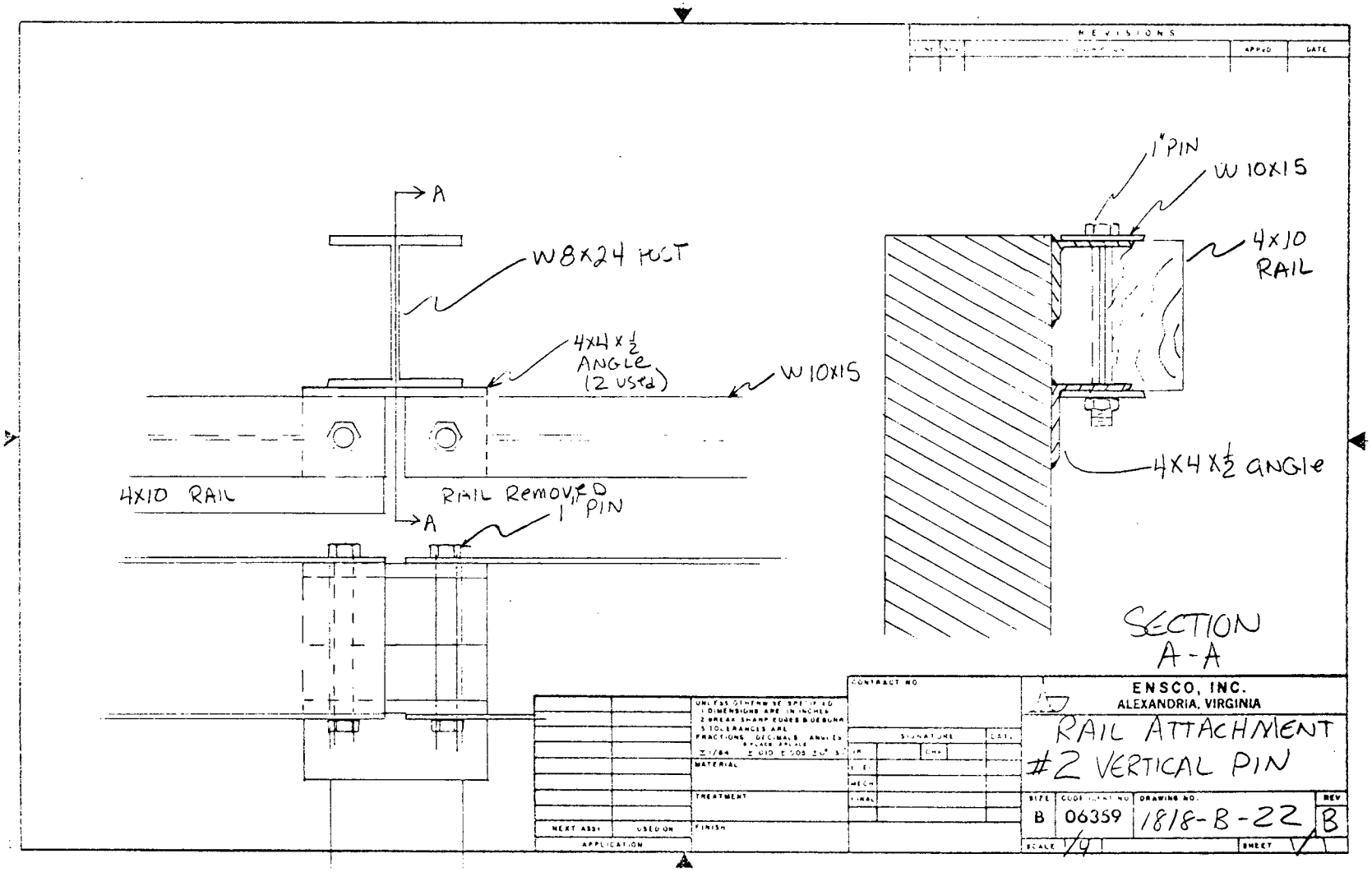
REVISIONS
A
W8x24 POST
4x4 x 1/2 ANGLE (2 USED)
W 10x15
4x10 RAIL
RAIL REMOVED
1" PIN
A
1" PIN
W 10x15
4x10 RAIL
4x4 x 1/2 ANGLE
SECTION A-A
ENSCO, INC.
ALEXANDRIA, VIRGINIA
RAIL ATTACHMENT #2 VERTICAL PIN
CONTRACT NO
UNLESS OTHERWISE SPECIFIED
1 DIMENSIONS ARE IN INCHES
2 BREAK SHARP EDGES & DEBURR
3 TOLERANCES ARE
FRACTIONS DECIMALS ANGLES
MATERIAL
TREATMENT
FINISH
NEXT ASSY
USED ON
APPLICATION
SIZE B
CODE IDENT NO 06359
DRAWING NO. 1818-B-22
REV B
SCALE 1/4
SHEET 1/1

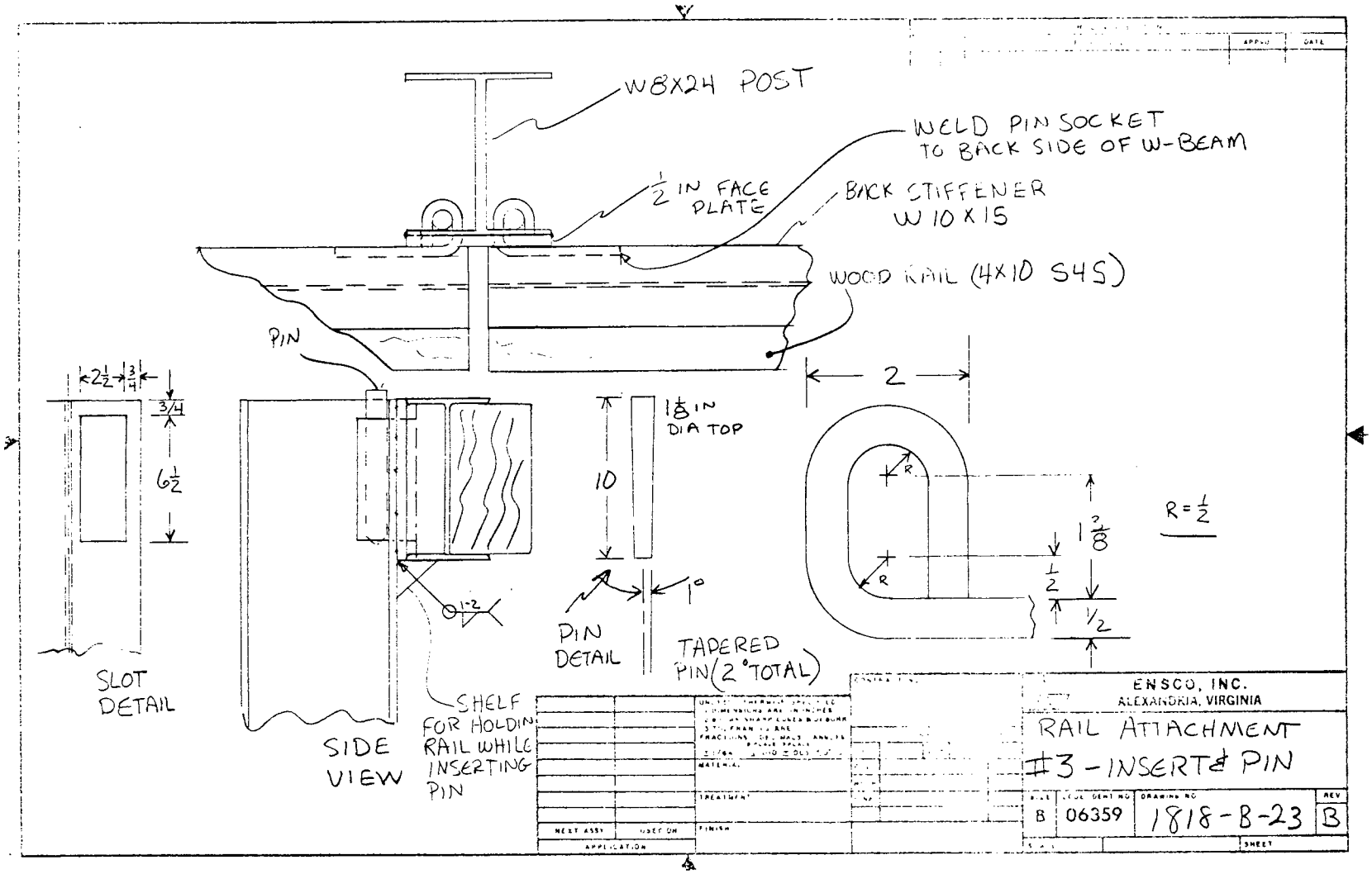
W8X24 POST
WELD PIN SOCKET TO BACK SIDE OF W-BEAM
1/2 IN FACE PLATE
BACK STIFFENER W 10 X 15
WOOD RAIL (4X10 S4S)
PIN
2 1/2
3/4
6 1/2
SLOT DETAIL
SIDE VIEW
SHELF FOR HOLDING RAIL WHILE INSERTING PIN
1 1/8 IN DIA TOP
10
1°
PIN DETAIL
TAPERED PIN (2° TOTAL)
2
R
1 3/8
1/2
1/2
R = 1/2
ENSCO, INC.
ALEXANDRIA, VIRGINIA
RAIL ATTACHMENT
#3 - INSERT & PIN
B
06359
1818-B-23
B
MATERIAL
TREATMENT
FINISH
NEXT ASSY
USED ON
APPLICATION
SHEET

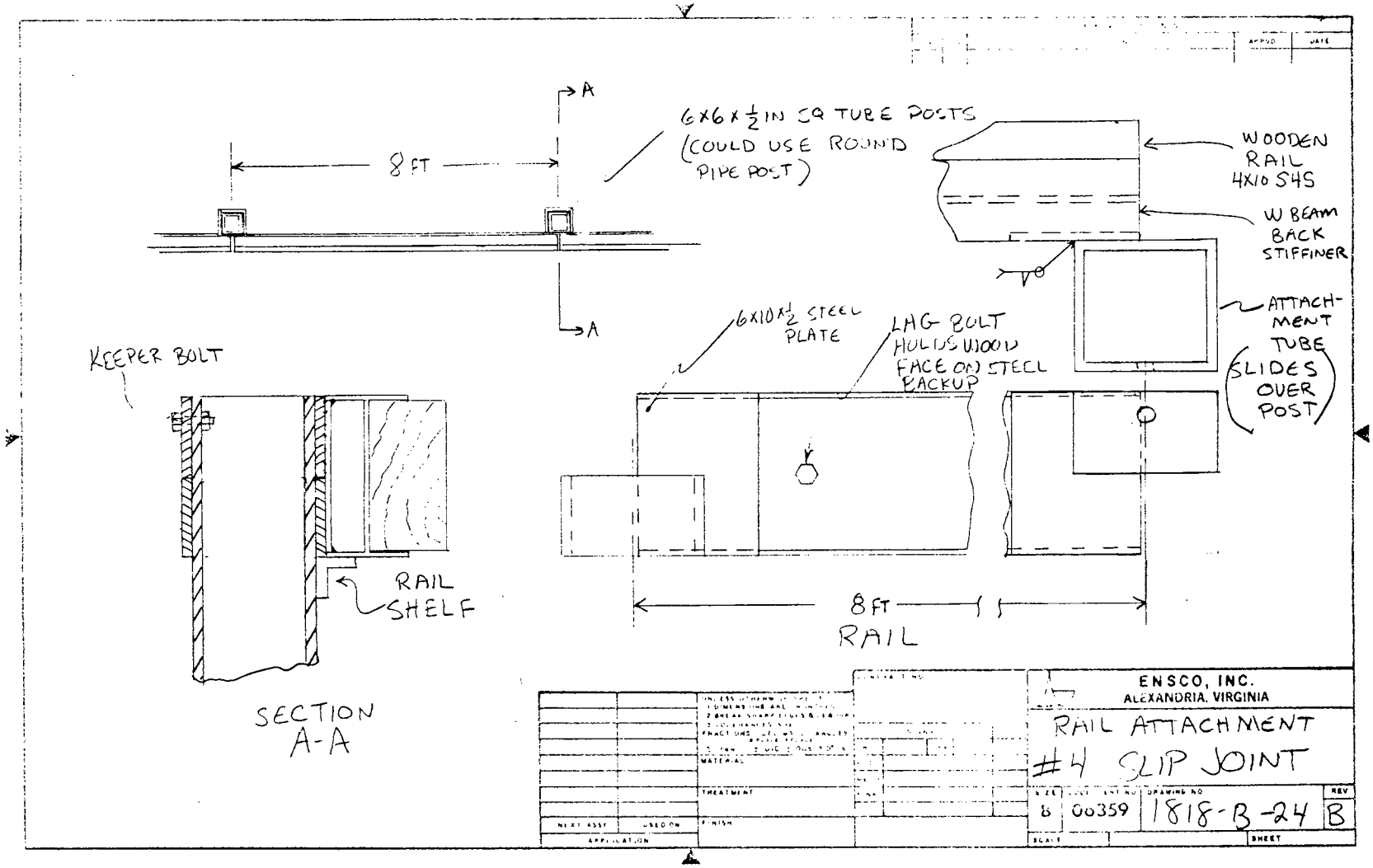
A
8 FT
A
6X6X1/2 IN SQ TUBE POSTS
(COULD USE ROUND PIPE POST)
WOODEN RAIL 4X10 S4S
W BEAM BACK STIFFINER
ATTACHMENT TUBE (SLIDES OVER POST)
6X10X1/2 STEEL PLATE
LAG BOLT HOLDS WOOD FACE ON STEEL BACKUP
KEEPER BOLT
RAIL SHELF
SECTION A-A
8 FT
RAIL
ENSCO, INC.
ALEXANDRIA, VIRGINIA
RAIL ATTACHMENT
#4 SLIP JOINT
B
00359
1818-B-24
B