ORDER

U.S. DEPARTMENT OF TRANSPORTATION
FEDERAL AVIATION ADMINISTRATION

7110.22D

9/29/86

SUBJ:ARRIVAL AND DEPARTURE HANDLING OF HIGH PERFORMANCE AIRCRAFT

1. PURPOSE. This order establishes procedures for the control of IFR arriving and departing high performance aircraft which will result in improved fuel economy, reduce time these aircraft are exposed to the more congested low altitude terminal environment, and provide noise relief for airport neighbors.

2. DISTRIBUTION. This order is distributed to selected offices in Washington and regional headquarters; all Air Traffic field facilities; FAA Technical Center; Mike Monroney Aeronautical Center; Flight Standards District Offices; and interested aviation public.

3. CANCELLATION. Order 7110.22C, Arrival and Departure Handling of High Performance Aircraft, dated November 20, 1981.

4. ACTION. All regional offices and approach control facilities shall review arrival and departure procedures, including SIDs and STARs, at airports serving high performance aircraft. As used in this order, "high performance aircraft" means turboprop aircraft weighing more than 12,500 pounds and all turbojets.

a. Procedures shall be developed and revised as necessary to ensure that, within reasonable operating limits and consistent with noise abatement policies, high performance aircraft:

(1) Remain at the highest practical altitude as long as possible when arriving.

(2) Climb to the requested altitude filed by the pilot as soon as possible after departing.

b. Prepare a Letter to Airmen, for distribution to affected pilots and user groups, describing these procedures (see Appendix 1). Ensure that users are notified of any procedural changes through this same procedure.

5. APPLICABILITY.

a. Apply these procedures at locations where the provisions of Order 7110.88 are not implemented regardless of traffic activity or time of day.

b. Altitudes and descent areas prescribed in this order are not intended to be so rigidly applied as to deny the use of different altitudes when circumstances such as turbulence, thunderstorms, icing, noise abatement, or lower flight planned altitudes warrant.

Distribution: ZAT-710 (minus military)
special military distribution

Initiated By: ATO-320

6. PROCEDURES.

a. Arriving aircraft should enter the terminal area at or above 10,000 feet above airport elevation (AAE) and remain at that altitude as long as feasible. Descent should commence no further than 40 flying miles nor less than 30 flying miles from the airport. Descent below 5,000 feet AAE shall be limited to the designated descent area unless the pilot has indicated an operational need for a lower altitude (see paragraph 5b).

b. Arrival delays should be absorbed at altitudes at or above 10,000 feet AAE.

c. Ensure uninterrupted climbs to departing aircraft and avoid assigning altitudes below 5,000 feet AAE when possible.

d. Avoid assigning VFR cruising altitudes.

7. EXCEPTIONS.

a. These procedures do not apply to ARTCC's or in a nonradar environment; however, where practical, the intent of this order should be complied with.

b. These procedures are not applicable to aircraft after they have entered a TCA. At those locations where high performance aircraft frequently operate below 5,000 feet AAE prior to entering the TCA, routes and altitudes should be published on the TCA area chart.

c. Military ATC facilities are exempt from these procedures unless compliance is directed by their respective service.

8. MISCELLANEOUS.

a. A typical descent area is depicted in Appendix 2.

b. Descent areas may be modified at ARSA locations.

c. These guidelines are necessarily broad and should be tempered with good judgment. They are not intended to be so inflexible that safety could be jeopardized.

John R. Ryan
Director, Air Traffic Operations Service

APPENDIX 1. SAMPLE LETTER TO AIRMEN

DEPARTMENT OF TRANSPORTATION
FEDERAL AVIATION ADMINISTRATION
(NAME OF FACILITY)
(CITY, STATE)

ISSUED: (DATE) EFFECTIVE: (DATE)

(NAME OF FACILITY) LETTER TO AIRMEN NUMBER ( ) .

SUBJECT: (SUBJECT TO LETTER)

CANCELLATION: (DATE - NOT TO EXCEED 24 MONTHS)

A (revised) (new) procedure will be started at (place name) on (date). We hope that a cooperative effort on the part of all pilots will help to improve the degree of safety in our airport environment. Furthermore, this program is designed to provide noise relief to our airport neighbors. A recent near midair collision study indicates that the most hazardous mix of controlled and uncontrolled aircraft occurs in terminal areas. The largest concentration of aircraft occurs within a radius of approximately 15 miles of the airport and at altitudes up to and including 4,000 feet AAE.

This (revised) (new) procedure is intended to reduce, as much as possible, the exposure of high performance airplanes to uncontrolled aircraft. To the extent possible, inbound IFR airplanes will be kept at (altitude MSL) or higher until further descent is required. This will normally involve maintaining (altitude MSL) (Procedural description).

We hope that pilot cooperation will help us, in some measure, segregate turbojet airplanes from the uncontrolled aircraft. This procedure has been established for instrument approaches but should work equally well for aircraft operating VFR. Normally the high performance airplanes will follow these prescribed flight paths; and, if the uncontrolled aircraft avoid these areas as much as possible, exposure will be reduced. Reduction of exposure should improve safety, which is the primary concern of all of us. We solicit your cooperation in making these procedures work so that total effectiveness may be realized.

(SIGNATURE)
(NAME OF AIR TRAFFIC MANAGER)
AIR TRAFFIC MANAGER, (NAME OF FACILITY)

(NOTE: Air Traffic Managers should attach to this bulletin a map of their local area depicting descent areas and the most heavily traveled IFR routes or radar vector paths to the descent areas).

TYPICAL DESCENT AREA

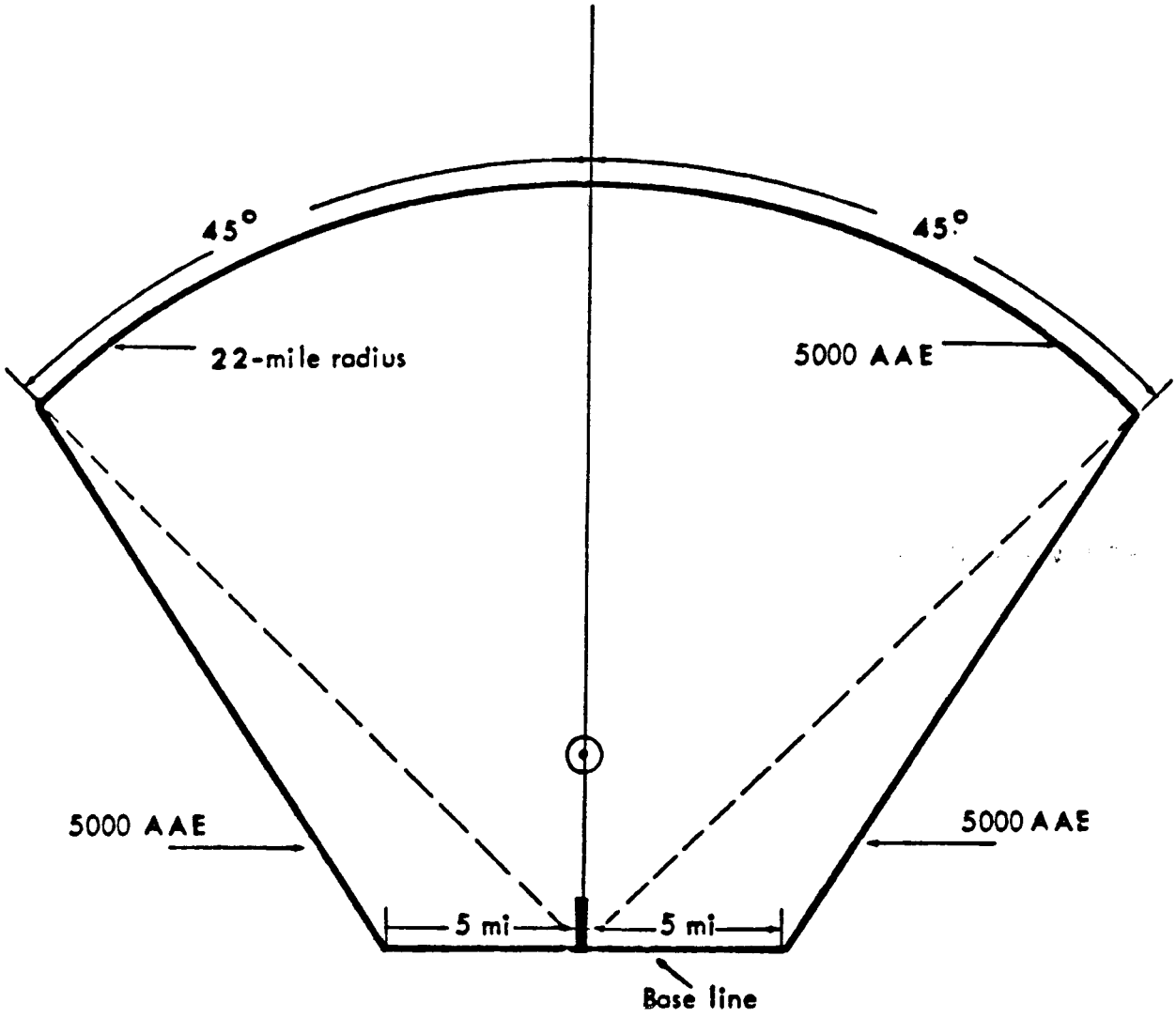
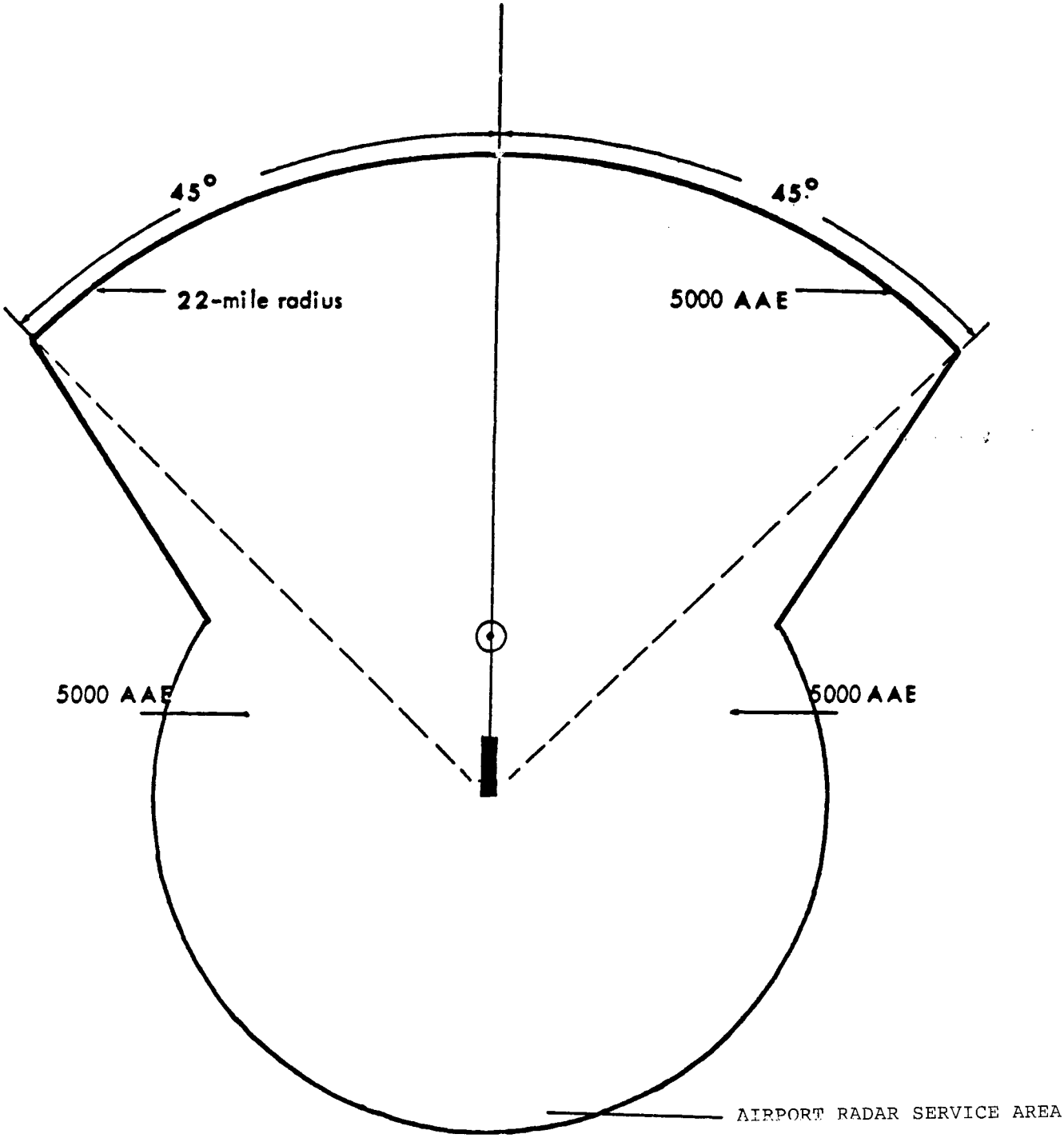
TYPICAL DESCENT AREA
AT ARSA LOCATIONS