U.S. Department of Transportation
Federal Aviation Administration

Runway Surface Condition Sensor Specification Guide

AC: 150/5220-13B
Date: 3/27/91

Advisory Circular

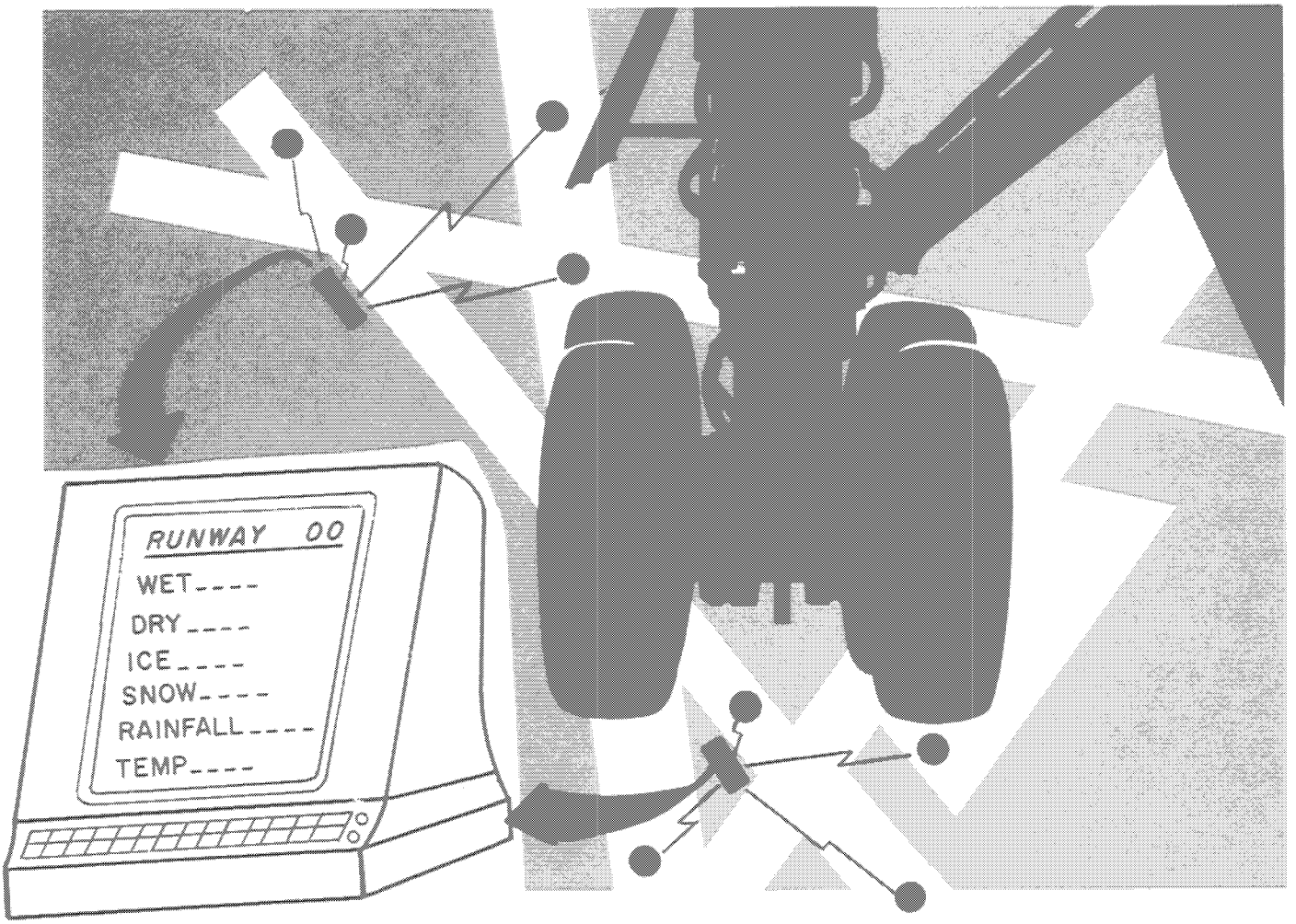

U.S. Department of Transportation
Federal Aviation Administration

Advisory Circular

Subject: RUNWAY SURFACE CONDITION SENSOR SPECIFICATION GUIDE

Date: 3/27/91
Initiated by: AAS-120

AC No: 150/5220-13B
Change:

1. **PURPOSE.** This advisory circular (AC) provides guidance to assist airport operators, consultants, and design engineers in the preparation of procurement specifications for sensor systems which monitor and report runway surface conditions.

2. **CANCELLATION.** AC 150/5220-13A, Runway Surface Condition Sensor Specification Guide, dated 4/22/83, is cancelled.

3. **APPLICATION.** The standards and specifications contained in this advisory circular are recommended by the Federal Aviation Administration (FAA) for procurement, installation, and operation of runway surface condition sensor systems at civil airports. For airport projects receiving Federal grant-in-aid assistance, compliance with the requirements of this AC is mandatory.

4. **SAFETY INFORMATION DISSEMINATION.** Airport operators are responsible for assessing and reporting conditions on the runway and in the vicinity of the airport which may affect aircraft safety. Runway surface condition monitoring devices have the capability of automatically providing, on remote monitors, current information about the condition of the runway surface at multiple locations. This capability can assist airport operators in more effective utilization of personnel, equipment, and materials--to maintain airport pavements free of snow and ice--and, at the same time, enhance an operator's ability to disseminate information about conditions on the airport operational areas. Although surface condition monitoring systems do not relieve airport operators of responsibility for reporting pavement surface conditions, they can assist in fulfilling that responsibility.

5. **PRINCIPAL REVISION.** This AC has been revised to incorporate siting criteria for the remote processing units in sensor systems and make appropriate editorial changes.

Leonard E. Mudd
LEONARD E. MUDD
Director, Office of Airport Safety and Standards

CONTENTS

PARAGRAPH PAGE

CHAPTER 1. INTRODUCTION

1. OVERVIEW 1
2. SENSOR SYSTEM CONCEPT. 1
3. ICE-CONTROL TECHNIQUES 1

CHAPTER 2. EQUIPMENT SPECIFICATION REQUIREMENTS

4. GENERAL REQUIREMENTS 3
5. COMPONENTS 3
6. MATERIALS 3
7. DESIGN AND CONSTRUCTION 3
8. PERFORMANCE SPECIFICATIONS 3
9. PRIMARY SYSTEM COMPONENTS 3
10. REQUIRED PROTECTION AND SYSTEM STANDARDIZATION 6
11. ANCILLARY EQUIPMENT 6
12. ELECTRICAL POWER REQUIREMENTS 6
13. MANUFACTURER CERTIFICATION 6

CHAPTER 3. LOCATION OF SENSORS AND PROCESSING UNITS

14. LOCATION OF REMOTE PROCESSING UNITS 7
15. LOCATION OF INPUT DEVICES--IN-PAVEMENT SENORS 7
16. NUMBER OF SENSORS 7
17. SENSOR PLACEMENT AS FUNCTION OF COMPLEX AIRPORT CONFIGURATION 7
18. GEOGRAPHIC LOCATION 7

CHAPTER 4. INSTALLATION CRITERIA

19. GENERAL 9
20. PAVEMENT DRILLING AND SAWING 9
21. INSTALLATION OF IN-PAVEMENT SENSOR HEAD 9
22. CONNECTION/INSPECTION AND TEST 9

FIGURES

Figure 2-1. System component design 4
Figure 3-1. Factors affecting sensor location 8
Figure 4-1. Sensor placement 10

CHAPTER 1. INTRODUCTION

1. **OVERVIEW.** Ice begins to form on pavements when the pavement surface reaches the freezing temperature of any solution on it. Runway surface condition sensor systems can detect the formation and/or existence of this ice. Sensor systems can also predict if and when the ice will begin to form. By detecting and/or predicting the formation of ice, safety is enhanced while airport equipment and manpower are conserved, and costs for ice control materials are reduced.

2. **SENSOR SYSTEM CONCEPT.** The use of air temperature alone, measured with weather instruments at a point above the surface of the airport, to detect or predict the occurrence of ice on the pavements, lacks reliability. This lack of reliability is primarily because of normal differences in temperature between pavement surfaces and ambient air. Factors such as runway surface color and composition, wind velocity and direction, surface moisture, atmospheric moisture content, traffic volume, amount and angle of incidence of sunlight, and ice-control chemical residue, however, also influence the formation of ice. Runway surface condition sensor systems, therefore, have become a primary tool in developing an effective ice prevention program.

3. **ICE-CONTROL TECHNIQUES.** Prevention of the formation of ice is more desirable than removal, in terms of safety, runway downtime, and cost.

a. **Anti-icing.** Prevention, which is the most effective method of airport ice control, is achieved by applying chemicals to the pavements prior to the formation of ice. Benefits of anti-icing include:

(1) **Safety.** Application of chemicals prior to ice formation prevents ice from reducing surface friction below that of a wet runway.

(2) **Cost.** Since no chemical is required to melt through the ice and dissolve the bond between the ice and the pavement, less chemicals are required. Anti-icing requires between 30 to 75 percent less chemicals than deicing operations.

(3) **Runway/Taxiway Downtime.** Ice prevention requires less airport operational area downtime because the chemicals are effective from the moment of application and no waiting period is required while the ice melts.

b. **Deicing.** Chemicals are applied after the formation of ice. Larger amounts of chemicals are needed to lower the water's freezing point and to dissolve the bond between ice and pavement. When the chemicals are used on ice, the water/chemical mixture can float on top of the ice, creating a more slippery surface than prior to chemical application.

c. **Spot Application.** Chemicals are applied only where ice is observed or anticipated. Patchy ice formation is often caused by the varying temperatures and surface states that exist on large airports. In general, the difficulty in detecting these patchy areas causes areas or portions of the icy spots to be missed or excessive amounts of material to be applied beyond the icy area. Remote runway sensors located in area historically know for early or patchy formation of ice will permit effective spot application of chemicals to prevent the formation of ice.

CHAPTER 2. EQUIPMENT SPECIFICATION REQUIREMENTS

4. **GENERAL REQUIREMENTS.** Measurable events or changes on a pavement surface occur sequentially. Each event (such as the formation of ice) has a definite beginning and end. A runway sensor system meeting the requirements of this section will detect the beginning and end of each surface event.

5. **COMPONENTS.** The pavement surface condition detection system consists of four functional elements: in-pavement sensors; supporting power supply/signal processor units; terminal data processing units; and data display units/printers (see figure 2-1).

6. **MATERIALS.** Materials shall conform to the specifications described herein. When not specifically listed, materials shall be of the best quality used for the purpose in commercial practice. Material and components shall be free from any defects or imperfections that might affect the system's function.

7. **DESIGN AND CONSTRUCTION.** The design of the equipment shall be in accordance with the most current engineering practices. The entire system shall be designed to minimize complexity. The equipment design and installation shall permit accessibility for use, maintenance, and servicing. All components and assemblies shall be free of protrusions, sharp edges, cracks, and the potential for electrical shock and other hazards which might cause injury to personnel or equipment. Maximum use shall be made of solid-state electronic devices and standard commercially available equipment such as display units/printers. The system shall be constructed so that no internal part will be exposed during normal operations. System components shall be built to withstand the climatic conditions at airports, i.e., rain, snow, frost, ice, sleet, temperature variations, hail, lightning, sand, dust, and high winds. They also must be built to withstand the strains, jars, and vibrations of aircraft landing, taxiing, and takeoff traffic.

8. **PERFORMANCE SPECIFICATIONS.**

a. The system shall continuously sample, in real time, runway surface conditions. In addition, it must be nondestructive to pavement, nondegrading to the environment, and nonhazardous to personnel. When activated, the system shall continuously transmit data, with a time lag no greater than 3 minutes, to a remote display console unit. The data or information transmitted shall be displayed in a clear, concise and easily understandable digital format. The system shall measure and display information about the following conditions on the runway surface:

(1) Runway surface temperature, i.e., actual temperature of pavement at the sampling site, in degrees C° (Celsius) or F° (Fahrenheit) with accuracy of ± ½° degree F°;

(2) Presence or absence of moisture, e.g., dry pavement--no perceptible moisture, or wet pavement--perceptible moisture on surface;

(3) Pre-ice conditions--advance alert of incipient ice formation prior to actual formation on the pavement, providing time to react depending on the air/pavement temperature drop rate and aeronautical operational needs;

(4) Actual ice--visible or otherwise detectable ice on pavement; and

(5) Ambient air temperature--at ground level in the vicinity of the runway.

b. The in-pavement sensor head shall be capable of transmitting the above data, in a stable mode, to the display unit by buried cable or a radio transmission link. Equipment shall be able to operate using conventional power sources available on the airport and shall be protected against lightning. The system shall function with minimal servicing or adjustment.

9. **PRIMARY SYSTEM COMPONENTS.** Requirements and elements of the system follow:

a. **Pavement Condition Input Device.** The most critical element of the system, because of the difficulty of servicing or replacing it, is the in-pavement sensor or pavement condition input device. This sensor senses and electronically transmits primary surface information to the rest of the system for processing. The sensor component (head) is installed in the pavement, flush with and in the plane of the pavement surface. The sensor component or head shall conform to the following design criteria:

(1) Internal components shall be solid state without relays, tubes, or other electromechanical devices. The head shall be factory adjusted and require no adjustment in the field.

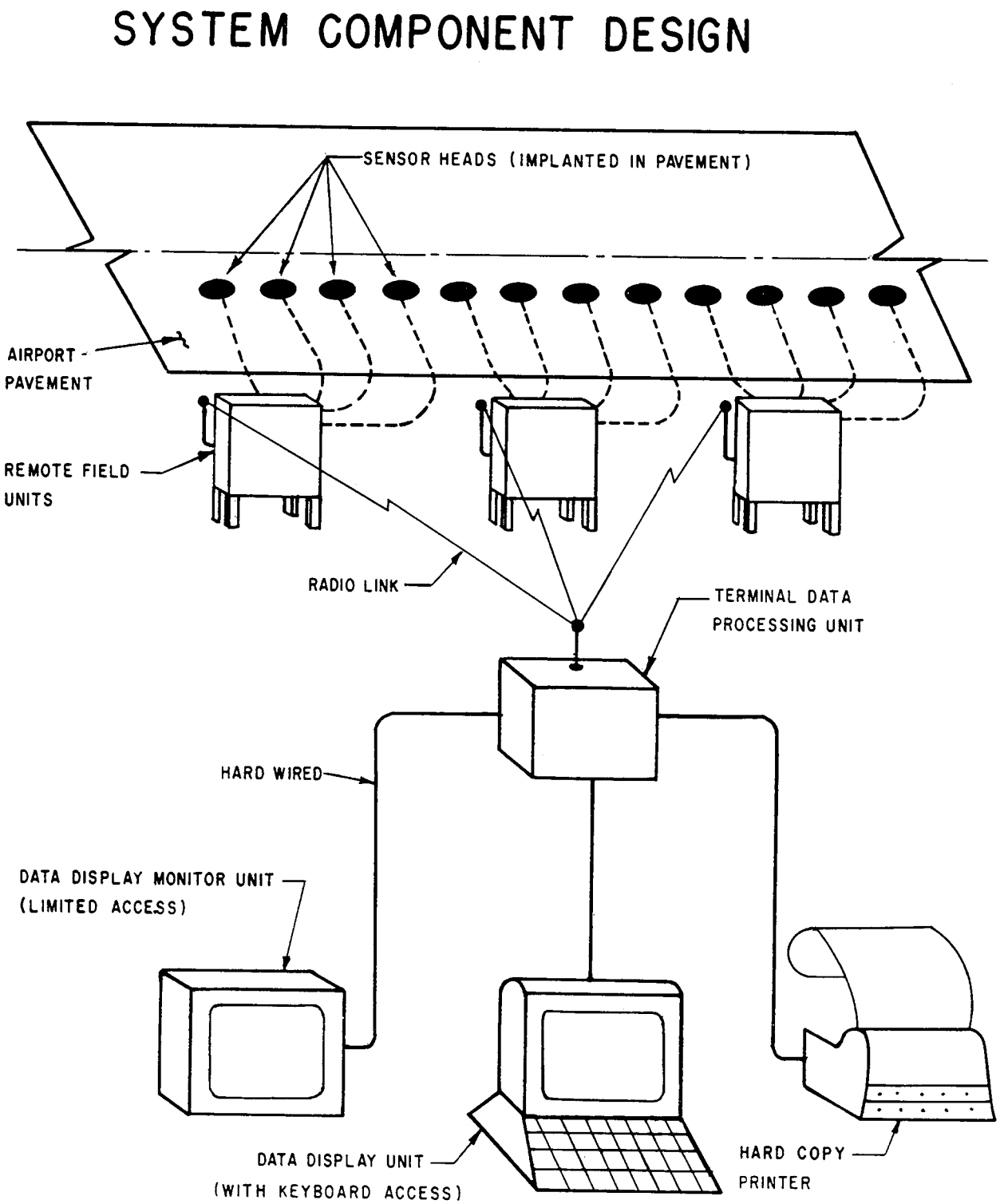

Figure 2-1. System component design

(2) All electronic components shall be permanently potted and sealed against shock, moisture, and vibration. The cable shall be permanently molded and sealed to the head in a leak-proof design. An additional waterproof seal may be installed on the cable/head interface or cable/cable connection to ensure against moisture wicking.

(3) The sensor component head shall be a thermally neutral device, fabricated of a noncorrosive material, with a thermal conductivity closely approximating the surrounding airport pavement material. It shall be color matched on a site-specific basis to each pavement surface to simulate actual pavement heat emission and absorption of solar radiation.

(4) The component head surface texture shall be similar to that of the surrounding pavement surface and approximate the flow and pooling characteristics of water on the surrounding pavement.

(5) The component head design and configuration shall require a pavement installation procedure of no greater complexity than for a standard in-pavement lighting fixture, i.e., a single core and/or cable-way saw cut for each sensor head.

(6) The power/data transmission cable shall be of sufficient length and capacity to extend to a signal processing site a minimum of 2,000 feet (608 m) from the sensor component head.

(7) The head shall have sufficient durability to function over a range of surface or air temperatures from +175° F (+80° C) to -20° F (-29° C).

b. **Power Supply/Signal Processor Units.**

(1) **Remote Field Unit.** This component provides power to the in-pavement sensor head, processes raw surface condition input data, collects air temperature and related atmospheric data, and transmits the processed data to the terminal data processing unit. The units shall be capable of supplying power to, and processing data from, a minimum of four in-pavement sensor heads.

(a) **Alignment.** System sensitivity and alignment or adjustment shall be controlled from these units and shall require no special service equipment or tools. All components requiring change or adjustment shall be designed to minimize servicing difficulty.

(b) **Location.** The remote field units shall be located in accordance with the criteria in paragraph 14; and, to the extent practical, should be collocated with existing airport air navigation facilities. They shall be mounted aboveground on frangible couplings.

(c) **Enclosure.** Remote field units shall be housed in waterproof enclosures meeting the National Electrical Manufacturer's Association (NEMA) standards for type 4 or equivalent. The enclosure shall be designed so that service can be performed with minimum exposure to the critical elements of the system.

(d) **Data Transmission.** The recommended means of transmitting data to the terminal unit is by radio telemetry using standard Federal Communication Commission (FCC) approved transmitters operating in the frequency range of 170-176 MHZ. An alternate transmission method may be by use of multi-conductor buried cables. When radio telemetry is elected, the frequency and installation layout shall be coordinated with the regional frequency management office.

(2) **Terminal Data Processing Unit.** This unit receives primary data by radio telemetry, phone lines, or multi-conductor buried cables from all remote field units in the system. It stores and processes the input data and transmits the processed data to display and/or printer units. This unit shall have the ability to process data from up to 120 in-pavement sensor heads. This unit shall be of solid-state electronic construction and have appropriate micro-processor design for the system requirements. The system shall be designed for operation in a sheltered environment and shall provide a stable operation at temperatures from 30°F (-1°C) to 120°F (49°C). The unit shall have provision for additional plug-in devices to expand memory and output capabilities. The unit may offer automatic telephone dialing.

c. **Data Display Unit.** This unit receives both real input information from the terminal data processing unit and data manually inserted by keyboard or automatically transmitted to the display unit by other means. The unit shall display data on a cathode ray tube (CRT) and/or a hard copy printer. The information displayed shall include other data dictated by operational needs at the airport. The display shall present pavement and weather-related information in a clear, easily understood format. The display unit shall be a conventional off-the-shelf design

requiring no special hardware to operate or install. The display unit electronics shall be primarily solid state. Optional software/hardware packages which can improve the basic capabilities are:

(1) **Graphics.** Graphs of trends showing the history and probable event sequence.

(2) **Information highlight.** Information of a critical nature enhanced by a color contrast on the display.

(3) **Additional Information.** Additional atmospheric and/or aeronautical operation information displayed separate from sensor data using a display format tailored to the user's needs.

(4) **Additional Monitor Units.** Duplicate displays at remote sites where the pavement surface information is needed. The duplicate displays are created by connecting one or more additional monitors to the master data display unit. These additional monitors shall have data entry keyboards if the system is capable of displaying manually inserted data to supplement weather and runway surface condition data processed automatically.

(5) **Remote Signalling.** The ability to page or telephone operations personnel.

(6) **Chemical Detection.** The ability to detect chemicals on the runway surface and to approximate the percentage of chemicals in runway surface water.

(7) **Atmospheric Condition Detection.** The ability to gather and sort atmospheric measurements of wind direction, wind speed, dew point, and relative humidity.

10. **REQUIRED PROTECTION AND SYSTEM STANDARDIZATION.**

a. **Circuit Protection Devices.** The system shall be grounded and lighting and powersurge protected, using standard protection devices.

b. **Power Supply System.** The system shall use standard relays, circuit devices, and other components of power supplies.

11. **ANCILLARY EQUIPMENT.** Ancillary equipment necessary for the operation of the system may include an FCC-approved, single-frequency radio telemetry system conforming to FCC frequency limits for nonaeronautical use on airports. (See paragraph 9d(l) for frequency guideline).

12. **ELECTRICAL POWER REQUIREMENTS.** The equipment should be designed to minimize power requirements and should have the following maximum power requirements or ranges:

a. Sensor head - .5 watts.

b. Power supply (when transmitter equipped) - up to 200 watts, + 50 watts.

c. Output monitor - 700 watts, + 100 watts.

d. Voltage requirements for complete system shall be standard 110-130 VAC at 50/60 HZ, or 220-260 VAC at 50/60 HZ.

13. **MANUFACTURERS CERTIFICATION.** The manufacturer shall provide the airport sponsor (user), in writing, the results of tests establishing compliance with the applicable specifications. In addition, the manufacturer shall supply a written warranty which guarantees that the manufacturer will correct by repair or replacement any defect in design, material, or workmanship which occurs during normal use in the first year of operation after installation, provided the installation was in accordance with the FAA and manufacturers' specifications. The manufacturer shall also agree to maintain a testing/evaluation/quality control program for all the system components. Particular emphasis shall be placed on quality control and climatic/reliability testing of the in-pavement sensor heads.

CHAPTER 3. LOCATION OF SENSORS AND PROCESSING UNITS

14. **LOCATION OF REMOTE PROCESSING UNITS.** The location of a remote processing unit is to a degree fixed by function. Where practical, these units should be collocated with air navigational aids within the object-free area (OFA); outside the runway safety area (RSA) and beneath the obstacle-free zone (OFZ). If collocation is not possible, the units shall be sited along the runway and taxiway, outside the RSA, beneath the OFZ, but not within the last 1,000 feet (304 m) of the runway. The siting shall conform to the object clearing criteria contained in AC 150/5300-13, Airport Design, (for an object fixed by its function).

15. **LOCATION OF INPUT DEVICES--IN-PAVEMENT SENSORS.** Pavement conditions that can affect aircraft transitioning from flight to apron parking should be monitored. In-pavement sensors shall be located in the:

a. **Touchdown Zone.** To monitor conditions affecting initial directional control and stability and then aircraft braking ability.

b. **Mid-runway.** To monitor conditions affecting the region of maximum aircraft braking effort and the capability to turn onto taxiways.

c. **Runway Exits.** To monitor conditions affecting low speed aircraft braking and the capability to turn.

d. **Taxiways and Aprons.** To monitor conditions affecting low speed maneuvering and parking.

16. **NUMBER OF SENSORS.** There shall be a minimum of three input devices or in-pavement sensors per runway. Factors which may require additional sensors for the runways, associated taxiways, and ramp areas (see figure 3-1) are:

a. **Color and Crown.** Differences in pavement color affect the emission and absorption rates of heat and sunlight; thus, the melting rate of ice and snow. Light pavements (concrete) will generally freeze before darker pavements (asphalt); and, hence, are candidates for additional sensors. Areas of reduced pavement crown can result in slower runoff of water, increasing the possibility of ice formation. These sites are also candidates for additional sensors.

b. **Temperature Differences on Pavement.** As the result of variations in subsurface materials and/or conditions, some pavement areas will have colder surface temperatures than the surrounding pavements and form ice earlier or more persistently. Temperature variations will result not only from differences in subgrade materials but from variations in the angle of incidence between the surface and the rays of the sun, at the transition to and from bridge decking, and, as a result of varying wind direction, ground water tables, culverts, and other phenomena.

17. **SENSOR PLACEMENT AS FUNCTION OF COMPLEX AIRPORT CONFIGURATION.** As the pavement area needed for aircraft operations increases, not only would the physical difficulty of monitoring the pavement surface conditions by manual inspection increase, but the number of input devices or sensors must be increased. As a general rule, the need for sensors will range from a minimum of 3 for a 3,000-foot (900 m) runway with no unusual local conditions to 12 or more sensors in a 10,000-foot (3 000 m) runway with varying surface and subsurface conditions. Local operator experience with ice and snow control can provide insight into unusual needs and the required number and location of sensors.

18. **GEOGRAPHIC LOCATION.** Ice formation is much more common than snow in geographic zones of normally temperate winter weather; thus, the need for airport ice prevention, with the aid of pavement condition detection systems, is significant in these zones.

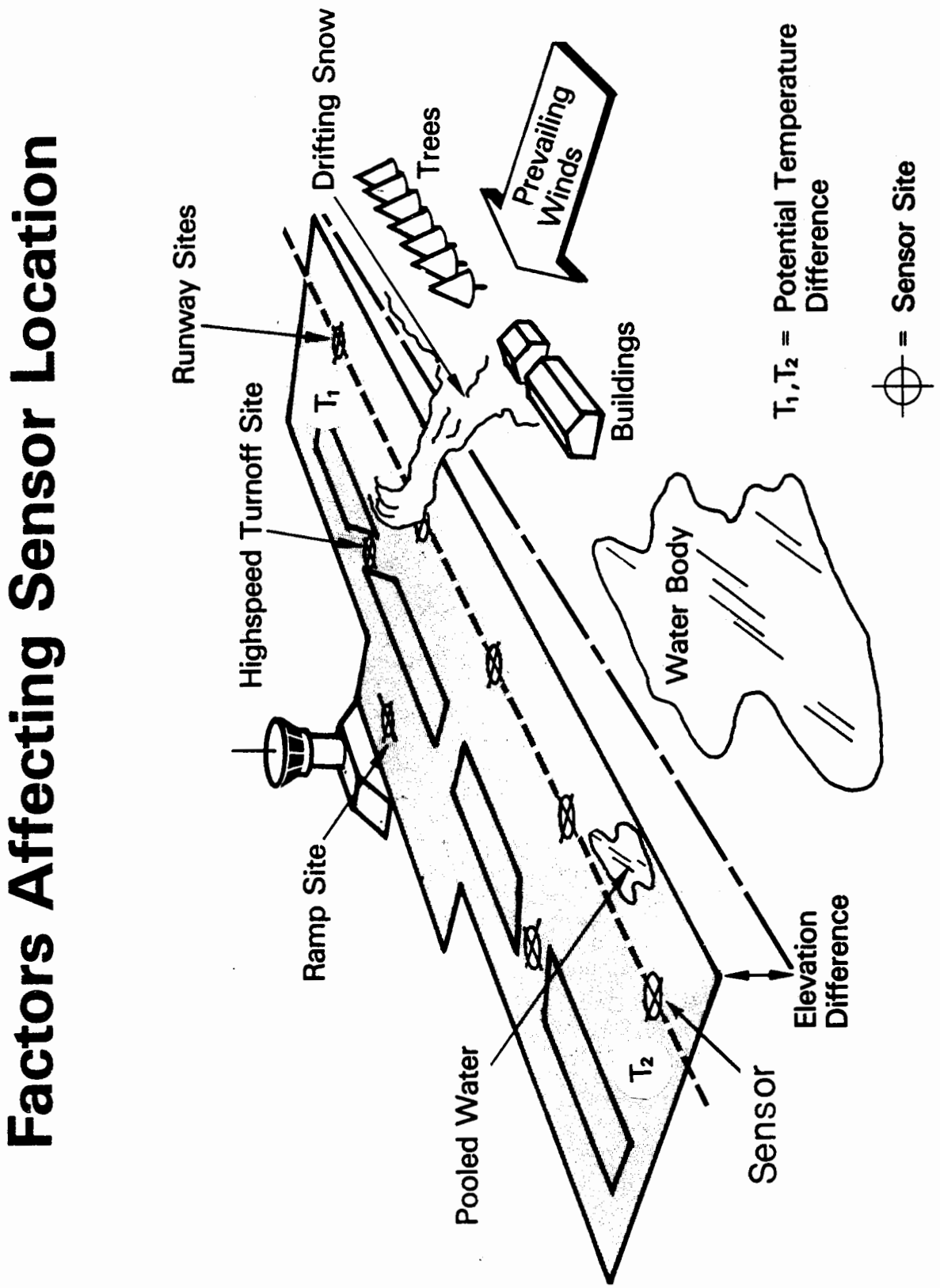

Figure 3-1. Factors affecting sensor location

CHAPTER 4. INSTALLATION CRITERIA

19. **GENERAL.** The procedure for installing the input device or in-pavement sensor is the same for all pavement types (see figure 4-1). Dimensions unique to a specific system will be provided in the manufacturers' installation specifications.

20. **PAVEMENT DRILLING AND SAWING.** Holes are sawed or drilled in the pavement to accommodate the in-pavement sensor. Kerfs for the cables are sawed in the pavement running from the hole for the sensor to the pavement edge. The sides and bottom of the hole and cable kerf shall be cleaned (sandblasting may be necessary) and flushed with a high velocity air jet or wiped dry to ensure a good bond with the sealing agent.

21. **INSTALLATION OF IN-PAVEMENT SENSOR HEAD.** Correct orientation of the sensor head with respect to aircraft traffic is essential for proper self-cleaning of the conductive probes built into the sensor. Sensor heads shall be flush with the top surface and in the plane of the pavement surface. When filling the kerf and drill hole, the installer shall make sure that the bonding agent fills the cavity and does not extrude over the sensor head. The cables shall be anchored in the bottom of the clean kerf cut with wedges or similar devices before the kerf is filled with the manufacturers' recommended bonding agent.

AC 150/5340-19, Taxiway Centerline Lighting System, and AC 150/5340-4C, Installation Details for Runway Centerline and Touchdown Zone Lighting Systems, provide additional installation recommendations.

22. **CONNECTION/INSPECTION AND TEST.** Connections from in-pavement sensor heads to the remote field unit and connections from the field unit to the airport power supply shall be made in accordance with manufacturers' instructions and the FAA advisory circulars referenced in paragraph 21. The connections shall be checked and the complete system aligned during installation. Since any in-pavement component problems are not easily corrected after the sensor units are sealed in the runway, a complete check for all sensor functions shall be accomplished prior to sealing and/or project completion. All test equipment and adjustments required at a particular site shall be supplied by the system manufacturer. All elements of the sensor electric power supply system, including materials, components, and designs, shall confirm to national, State, local, and FAA-accepted practices or codes for the installation of systems with similar electrical power requirements and placements. This requirement covers cable, cable burial, electrical tie-ins, and other equipment necessary for system operation.

SENSOR PLACEMENT

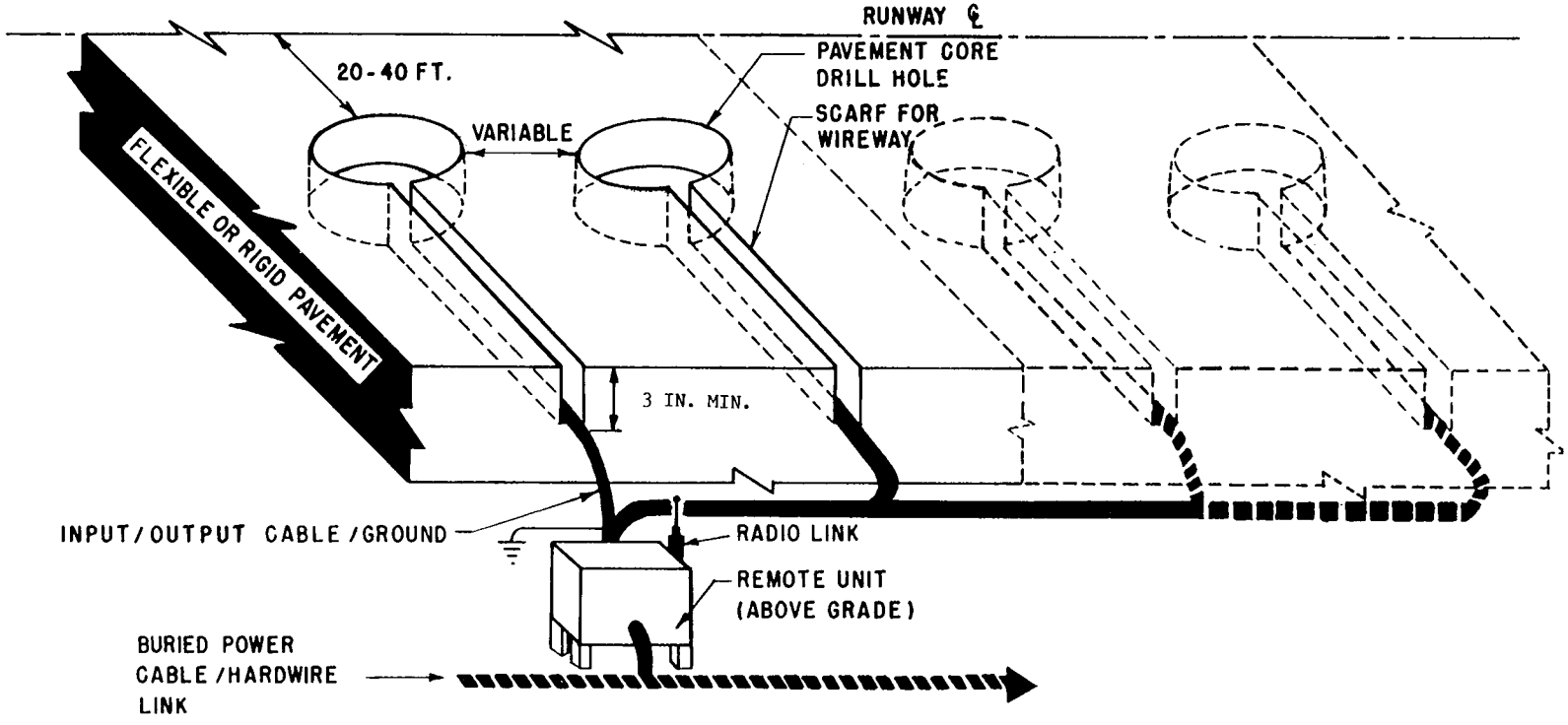

Figure 4-1. Sensor placement