ORDER

8340.1A

CONSOLIDATED REPRINT
Includes Changes
1 through 79

MAINTENANCE BULLETINS

November 1, 1973

U.S. DEPARTMENT OF TRANSPORTATION
FEDERAL AVIATION ADMINISTRATION

Distribution: ZFS–834; FFS–1,2,3,5,7,8 (all employees); FFS–4 **Minimum**; FIA–0 (normal); AAC–955 (80 copies)

Initiated By: AFS–330

RECORD OF CHANGES

DIRECTIVE NO. 8340.1A

CHANGE TO BASIC	SUPPLEMENTS			OPTIONAL	CHANGE TO BASIC	SUPPLEMENTS			OPTIONAL
1-79									
INCLUDED									

Page No.

CHAPTER 1. INTRODUCTION. 1

1. Maintenance Bulletins. 1
2. Types of Maintenance Bulletins. 1
3. Procedures for Initiating Routine Maintenance Bulletins. 1
4. Procedures for Issuing Telegraphic Maintenance Bulletins (GENOTS) (RIS: FS 8300-4). 2
5. Followup of Telegraphic Maintenance Bulletins (GENOTS). 3
6. Handling and Use of Maintenance Bulletin Information Upon Receipt by Inspectors. 3
7. Responsibility for Approval, Revision, or Cancellation. 4
8.-50. Reserved.

CHAPTER 2. MAINTENANCE BULLETINS—NUMBERING SYSTEM. 51

51. Explanation of ATA Code. 51
52. System for Numbering of Bulletins. 51
53.-100. Reserved. 51

CHAPTER 3. MAINTENANCE BULLETINS: GENERAL INFORMATION. 61

SECTION 1. SAFETY PRACTICES. 61

101. Test Cell Accident Which Resulted in the Death of a Mechanic. 61
102. Hazards—Oxygen Bottles. 62
103. Ground Service Cart Explosion. 63
104. Health Hazards Associated With Aircraft Fluids. 63
105. Hazards Associated With Unattended Aircraft. 64
106. Electrical Discharge Method (ELOX) for Drilling. 64
107. Ground Personnel Safety Precautions—Jet Engine Danger Zones. 65
108. Emergency Locator Transmitter Battery Packs—Mercury Cell. 66
109. Emergency Systems Inspection Periods. 66
110. Potential Fire Hazards—Silver Conductors D.C. and Glycol Solution. 67
111. Maintenance Shift Turnover Procedures. 67
112. Ground Personnel Safety—Towing Procedures. 68

	Page No.
113. Douglas Model DC-3C Aircraft—Counterfeit Airplane Flight Manual.	69
114. Approval of Major Repair Data.	69
115. Deicing of Aircraft With Engines Operating.	70
116. Clarification as to Extent of Manufacturers' Authority in Dispatch Decisions of an Air Carrier.	71
117. Service Life of Light Producing Chemicals.	72
118. Potential Health Hazards Associated With Investigation of Agricultural Aircraft Accidents.	72
119. Safety Practices for Aircraft Towing.	73
120. Maintenance Problems Associated With the Air Shipment of Livestock.	74
121. Maintenance Logbook Page Accountability.	75
122. Part 135 - Avionics Inspection Programs.	75
123. Equipment Maintained "On Condition."	76
124. Avions Marcel Dassault—Breguet Aviation (AMD-BA) Falcon Model 10 Teleforce Control Cables.	77
125. Use of Polyvinyl Chloride (PVC) Insulated Electrical Wire in Aircraft.	77
126. Uncovered Electrical J Boxes.	78
127. Aircraft Deicer Fluids.	78
* 128. Responsibility for Aircraft Servicing.	79 *
129.-149. Reserved.	
SECTION 2. TOOLS AND TEST EQUIPMENT.	101
150. Use of Impact Type Wrenches.	101
151. Hydrogen Embrittlement in Aircraft Bolts.	101
152. Improper Use of Metalized Industrial Adhesive Tape in Aircraft Maintenance.	102
153. Part Failure From Stress Risers Caused by Electrical Arcing During Magnaflux Inspection.	102
154. Weld Repairs on Assembled Jet Engines.	103
155. Winter Operation of Aircraft.	103
156. Parts and Equipment From Military Supply Facilities.	104
157. Contamination of Aircraft Fluids.	104
158. Self-Locking Nuts—Defective Locking Feature.	104
159. Foreign Objects in Critical Areas of Aircraft.	105
160. RF Test Signals—Radiation Interference.	106
161. Avionic Test Equipment.	106
162. USAF AN/UPX-7 IFF/SIF Transponder Test Set.	106
163. Altitude Encoder Test Equipment.	107
164. Unserviceable Hardware in Serviceable Stock.	107
165.-199. Reserved.	
APPENDIX 1. AIR CONDITIONING (ATA CODE 2100)	
21-1. Boeing 707/720 Aircraft Pressurization System Malfunction.	1

FOREWORD

1. PURPOSE. This Order provides inspectors in all specialty areas with information concerning conditions found on specific aircraft or aircraft components that may assist them in the performance of their assigned duties. Such information describes conditions that may have a bearing on safety. The contents may be discussed with interested persons in the aviation industry.

2. DISTRIBUTION. This Order is distributed to all Flight Standards offices (in Washington, Regions, and the Aeronautical Center) and all addressees on list ZFS-834; to all General Aviation, Air Carrier, Engineering and Manufacturing, and Flight Standards District Offices (GADO/ACDO/EMDO/FSDO); and to all International Field, International Aviation Field, and Aeronautical Quality Assurance Field Offices (IFO/IAFO/AQAFO).

3. CANCELLATION. Handbook 8340.1, Maintenance Bulletins, dated March 1, 1967, is cancelled.

4. EXPLANATION OF MAJOR CHANGES. The maintenance bulletins have been edited and rewritten for clarification and updating. In addition, the following reclassification actions were taken.

   a. The numbering system for specific bulletins is by ATA Specification Code 100, breaking those bulletins into specific appendices; e.g., Landing Gear, Equipment.

   b. Bulletins of a general nature are contained in a separate chapter.

   c. All bulletins that are no longer applicable have been deleted.

   d. An alphabetical index by manufacturer, cross-referenced to the ATA Code, is provided.

C. R. Melugin Jr.

Acting Director, Flight Standards Service

		Page No.
21-2.	McDonnell Douglas Model DC-9 Aircraft—Installation of the Proper Water Separator Duct Connector and Clamp.	1
21-3.	DC-10 Radio Rack Fans.	2
APPENDIX 2.	AUTO FLIGHT (ATA CODE 2200)	
22-1.	Unauthorized Work on Autopilot Systems	1
APPENDIX 3.	COMMUNICATIONS (ATA CODE 2300)	
23-1.	Aircraft Public Address Systems.	1
23-2.	Static Discharge Damage and Effect on the VHF Communication.	1
23-3.	WITHDRAWN—CHG 14.	2
23-4.	WITHDRAWN—CHG 14.	3
23-5.	Aircraft HF Communication Systems and Corona Discharge.	3
23-6.	Radair Model Dart II Emergency Locator Transmitter.	4
23-7.	Granger Associates—Static Dischargers.	5
23-8.	Chromalloy ACR/RLB-6 Emergency Locator Transmitter.	5
23-9.	NAV/COM Equipment—Frequency Modulation Interference.	6
23-10.	Cockpit Voice Recorders—Inspection and Maintenance Practices.	6
23-11.	Emergency Locator Transmitter—Inspection and Maintenance Practices.	7
23-12.	Bendix RTA-43A VHF Transceiver—VOR/ILS Interference.	8
23-13.	Aircraft Public Address System Test Procedures.	9
23-14.	Douglas DC-10, Loss of Power to the Passenger Oxygen Drop System.	10
23-15.	Installation of Cockpit Voice Recorder (CVR)/Underwater Locator Device (ULD).	10
23-16.	Cockpit Voice Recorders—Self-Test.	10
* 23-17.	RECOMMENDED PREVENTIVE MAINTENANCE SCHEDULE FOR THE UNITED CONTROL CORPORATION (SUNDSTRAND) V-557 COCKPIT VOICE RECORDER (CVR).	11 *
APPENDIX 4.	ELECTRICAL POWER (ATA CODE 2400)	
24-1.	Unused Electrical Connectors—Potential Fire Hazards.	1
24-2.	Electrical Wiring Corrosion in Lavatory Areas.	1
24-3.	Use of Plastic Electrical Insulating Tape.	2
24-4.	Boeing 727 Series Aircraft—Circuit Breaker Contamination Fire Hazard.	2
24-5.	Cessna 310/320 Aircraft—Battery Cable.	3
24-6.	Nickel Cadmium Battery Quick-Disconnect Plug.	3
24-7.	Air-Driven Generator Testing.	4
24-8.	McDonnell Douglas DC-9 Cross-Tie Relay Information.	4
24-9.	Sikorsky Model S-61 Helicopter—Nickel-Cadmium Battery Cover.	5
24-10.	McDonnell Douglas DC-10 Air Driven Generator (ADG) Ground Operational Test.	5
24-11.	Klixon Toggle-Type Circuit Breakers, P/N C6363-1-10.	5
24-12.	Aircraft Circuit Breaker Panel Marking.	6
24-13.	Miscellaneous Equipment Requirements: A Means for Indicating Adequacy of Power Being Supplied to Required Flight Instruments - Section 121.313.	6
APPENDIX 5.	EQUIPMENT AND FURNISHINGS (ATA CODE 2500)	
25-1.	Malfunctions of Evacuation Slides in Air Carrier Aircraft.	1
25-2.	Maintenance of Passenger Seats.	3
25-3.	Maintenance of Aircraft Buffet Equipment, Baggage Retainers, and Movable Equipment Located in the Passenger Compartment.	4

		Page No.
25-4.	Maintenance of Life Rafts in Air Carrier Aircraft.	5
25-5.	Maintenance of Class D Cargo and Baggage Compartment Liners.	6
25-6.	Emergency Flotation Devices—Passenger Seat Cushions.	7
25-7.	Vendor-Manufactured Cargo Containers Designed to be Carried on Passenger Seats.	7
25-8.	Emergency Evacuation Slide Lighting.	8
25-9.	Flight Attendant Seat Automatic Retraction.	8
25-10.	Aircraft Passenger Seat Belts.	9
25-11.	Boeing Model 747 Aircraft—Conversion of Vacant Life Raft Compartments for Stowage.	10
25-12.	Boeing Model 747 Aircraft—Main Cabin Ceiling Panel Security.	10
25-13.	McDonnell Douglas DC-8 Aircraft—Life Raft Compartment Doors.	11
25-14.	Lockheed L-188 Aircraft—Control Column/Seat Interference.	11
25-15.	Emergency Evacuation Slides.	12
25-16.	Defective Inflation System for Aircruiser's Emergency Evacuation Slides.	12
25-17.	Boeing 747 Aircraft—Escape Slide Inflation Hose Coupling Connector Inspection.	13
25-18.	Boeing Model 747 Aircraft—Escape Slide Gas Generator Security.	14
25-19.	Boeing Model 747 Aircraft—Main Entry Door Girt Bar Support Brackets.	14
25-20.	Aircraft Lavatory Fires.	15
25-21.	Fire Hazard—Passenger's Reading Light System Wiring Discrepancy.	16
25-22.	B-707 Inflight Fire in Galley Area.	17
25-23.	Aircraft Cabin Storage Containers.	17
25-24.	Chadwick Model C-75 Helicopter Cargo Rack Installation, STC SH133WE.	18
25-25.	DC-9 Weber Seats.	18
25-26.	B-747 Off-Wing Escape Slides.	18
25-27.	Aircraft Galley Electrical Appliances.	19
25-28.	B-747 Off-Wing Escape Slide Thruster Ignition Cable.	19
25-29.	McDonnell Douglas Model DC-9 Aircraft—Circuit Breaker Protection.	20
25-30.	Emergency Evacuation Slides.	20
25-31.	Cabin Attendant Seat Belts.	21
25-32.	B-747 Upper Deck Evacuation Slide.	22
25-33.	Aircraft Galley Ovens.	22
25-34.	Passenger Seat Armrest Retraction.	23
25-35.	Life Preserver Stowage.	23
25-36.	Passenger Seat Covers.	24
25-37.	Department of Transportation (DOT) 3HT and 4D Type Cylinders Manufactured Under Exemptions.	24

		Page No.
25-38.	General Pneumatic Corporation Liferaft Pressure Cylinder Regulator Part No. D5008-3.	25
25-39.	Personnel/Food Cart Lifts.	26
25-40.	Wide-Body Aircraft Food/Beverage Service Cart Restraining and Latching Mechanisms.	27
25-41.	Sargent Industries, PICO Division, Emergency Evacuation Slides, Part Numbers 11331 and 11331-1, Approved for Use on DC-9 Series 10, 30, 40, and 50 Aircraft.	28
25-42.	Corrosive Properties of Flame Retardant Solutions.	28
25-43.	Inspection of Individual Flotation Devices - Passenger Seat Cushions.	29
* 25-44.	Eastern Aero Marine, Individual Flotation Devices, GA-12	29 *
APPENDIX 6.	FIRE PROTECTION (ATA CODE 2600)	
26-1.	McDonnell Douglas DC-8 Sixty Series Aircraft--Fire Agent Discharge and Agent Low Pressure Indicating System.	1
26-2.	Fairchild F-27 and FH-227 Aircraft--Walter Kidde Fire Extinguisher Systems.	1
26-3.	CO_2 Fire Extinguisher System Release Mechanism Failure.	2
26-4.	Dry Chemical Fire Extinguishing Agent Residue Removal.	3
26-5.	Kiddie Aircraft Water Extinguishers.	4
26-6.	Edison Electronics--Model 294, Fire Detector Cable Assembly.	6
APPENDIX 7.	FLIGHT CONTROLS (ATA CODE 2700)	
27-1.	Douglas DC-7B--Aileron Bellcrank Failures.	1
27-2.	DC-3 Aileron Control Rod Attachment Failure and Internal Corrosion in the Push-Pull Tubes.	1
27-3.	Fairchild F-27 and FH-227 Aircraft--Elevator Trim Tab Difficulty.	2
27-4.	Fairchild Hiller F-27 and FH-227 Series Aircraft--Aileron and Elevator Hinge Bearings.	2
27-5.	Fairchild Hiller F-27 Series Aircraft--Wing Flap Drive and Control System.	2
27-6.	Boeing 707 Series Aircraft--Spoiler Hydraulic System.	3
27-7.	Boeing 720 Aircraft Cable Failure.	4
27-8.	McDonnell Douglas DC-9 Series Aircraft--Horizontal Stabilizer Oscillation.	4
27-9.	Boeing 727 Series Aircraft--Elevator and Aileron Balance Panel Hinges.	5
27-10.	Failure of Wing Flap Attach Bolts, L-188 Aircraft.	5
27-11.	Lockheed L-188 Wing Flap Torque Tube Failures.	5
27-12.	Martin 404 Aircraft Aileron Counterweight Vane Bracket Failure.	6
27-13.	Lockheed Models 049 Through 1049, and 1649A Series Aircraft--Elevator Trim Tabs.	7
27-14.	Douglas DC-8 Flaps and Flap System Problems.	7
27-15.	Amateur-Built Stits Playboy Model SA-3A Stabilizer Attachment Design.	7
27-16.	McDonnell Douglas Model DC-10 Aircraft--Angle-of-Attack Sensor Exposure to Damage.	8
27-17.	Inspection of MS21251-B3L Turnbuckles.	8

Page No.

27-18. Boeing Model 747 Series Aircraft--Wing Trailing Edge Flap Malfunctions. 9
27-19. McDonnell Douglas Model DC-9 Aircraft--Lockwire Installation for Spoiler Control Drum Assemblies. 9
27-20. Boeing Model 707/720 Aircraft--Rudder Cable Failure Runaway. 10
27-21. Falcon Model 10 Aircraft--Horizontal Stabilizer Trim Runaway. 11
27-22. Flight Control Travel Limit Stop Bolts. 11
27-23. Fairchild Hiller FH-27 and FH-227 Series Aircraft - Flight Control System Cable Inspection. 12
27-24. Wing Leading Edge Erosion. 12
APPENDIX 8. FUEL (ATA CODE 2800)
28-1. Center-Point Fueling Pressure Surges. 1
28-2. Hazard of Water Contamination in Fuel Stored and Dispersed From Fuel Trucks. 2
28-3. Turbine Fuel Contamination. 2
28-4. Boeing Model 747 Aircraft--Fuel Line Coupling Inspection and Modification. 4
28-5. Fuel Pressure Transmitter Damage During Defueling - Douglas DC-8 Aircraft. 5
28-6. Lockheed 14 and 18 Series Aircraft--Fuel Tank and Engine Selector Valve Handle Retaining Pin Failure. 5
28-7. British Aircraft Corporation (BAC 1-11)--Rolls Royce Spey Series Engine. 6
28-8. Fire Prevention During Fuel Tank Defueling, Purging, and Repair Operations. 7
28-9. Aircraft Fuel Feedline Shroud Drains. 8
28-10. DC-8 Fuel Dump Chute Cables. 8
28-11. DC-8/DC-9 Aircraft, Inspection of Fuel Tank Electrical Conduit Assembly. 9
28-12. Use of Fuel Additive BIOBOR JF for Fungicide Control (BIOCIDE Treatment). 9
28-13. Pratt & Whitney Model JT9D Engine--Fuel Control Outlet Tube Flexible Fitting. 10
28-14. L-1011 Square Switchlight Guards for Engine Fuel Tank Valves. 11
28-15. McDonnell Douglas DC-10 Series Aircraft--Erroneous Fuel Quantity Indications. 11
28-16. FAA Approved Airplane Flight Manual (AFM) Requirements Regarding Foreign Purchased Aircraft and Fuel System Indicators That Read in Metric Units. 12
APPENDIX 9. HYDRAULIC POWER (ATA CODE 2900)
29-1. Boeing B-727 Series Aircraft--Loss of System "A" Hydraulic Fluid. 1
29-2. Jet Transport Hydraulic Systems--Internal Leakage. 1
APPENDIX 10. ICE AND RAIN PROTECTION (ATA CODE 3000)
30-1. Damage to Engine Fan Blades. 1
30-2. Falcon Model 10 Aircraft--Slat Anti-Icing Hose. 1
APPENDIX 11. INSTRUMENTS (ATA CODE 3100)
31-1. Flight Recorder Maintenance. 1
31-2. Kollsman Sensitive Altimeter Balance Arm Failures. 2

Page No.

31-3. Unapproved Altimeters. 3
31-4. Dukane Underwater Locator Beacon Model N15F210B. 4
31-5. Non-Technical Standard Order (TSO) Instruments and Avionics Equipment. 4

APPENDIX 12. LANDING GEAR (ATA CODE 3200)

32-1. High-Tensile Strength Steel Used in Landing Gears. 1
32-2. Maintenance of Aircraft Landing Gear Systems. 2
32-3. Aviation Tire Maintenance Practices. 4
32-4. Landing Gear Wheel Retainer Nuts. 5
32-5. Boeing 727—Landing Gear Wheel Failures. 5
32-6. Fairchild Hiller F-27 and FH-227 Series Aircraft—Main Landing Gear Actuator. 6
32-7. Fairchild Hiller Model F-27 Aircraft—Landing Gear. 6
32-8. Boeing B-747—Landing Gear Control Module. 7
32-9. Boeing Model B-747 Series Aircraft—Main Wheel Bearings. 7
32-10. Boeing 727 Aircraft Landing Gear Control System. 8
32-11. Lockheed L-382 Series Aircraft—Main Landing Gear Jackscrew Failure. 8
32-12. Champion Aircraft Models 7AC, 7BCM, 7CCM, 11AC and 11BC—Landing Gear Shock Strut. 9
32-13. Boeing Model 707/720 Series Aircraft—Nose Landing Gear Failed to Extend. 10
32-14. Boeing Aircraft—Nose Landing Gear Failure to Extend. 11
32-15. Convair Model 240/340/440/580/600/640 Series Aircraft—Landing Gear Uplatch Release Cable. 11
32-16. Taxiing the DC-8 Aircraft at Low Speeds With the Cockpit Anti-Skid Switch in the "Flight Mode" Position. 12
32-17. McDonnell Douglas Model DC-9 Aircraft Landing Gear Control Lever—Improper Installation of Center Instrument Panel. 13
32-18. Cessna Model 310/320/340/401/402/411/414 and 421 Series Aircraft—Landing Gear Retraction and Extension System. 14
32-19. Boeing Model 707 Aircraft—Wheel Failures. 15
32-20. Douglas DC-9 Aircraft Main Landing Gear Retract Cylinder Eyebolts. 15
32-21. Inspection of DC-6 Main Landing Gear Latch Assembly, P/N 5493723, for Cracks. 16
32-22. Boeing Model 727 Series Aircraft—Main Landing Gear Side Strut Assembly. 16
32-23. Analysis of DC-8 Wheel Failures Examined by the NTSB Metallurgical Laboratory. 18
32-24. Loss of Nose Landing Gear Drag Brace Upper Cross Tube Taper Pins on DC-8 Aircraft. 19
32-25. Lockheed L-1011 Main Landing Gear Wheel Failures. 19
32-26. Douglas DC-8 Main Landing Gear Bogie Beam Swivel Lug Bore. 20
32-27 Convair Model 240/340/440/580/600/640 Series Aircraft Landing Gear Door Lubrication. 21
*32-28 Boeing 727 Series Aircraft - Main Landing Gear Door and Lock System Inspection. 22 *

Page No.

APPENDIX 13. LIGHTS (ATA CODE 3300)

33-1.	Fire Hazard—Cargo Compartment Lamps.	1
33-2.	McDonnell Douglas Model DC-9 Aircraft—Fire Hazard—Flight Attendant's Aft Work Light, Electrical Circuitry.	2
33-3.	DC-9 Emergency Lighting System.	2
* 33-4.	Emergency Lighting Systems on Aircraft - FAR Sections 25.812(e)(1) and 121.310(d)(2)(i).	3 *
33-5.	Aircraft Instrument Lighting Requirements for Parts 121, 123, and 135 Operators.	3

APPENDIX 14. NAVIGATION (ATA CODE 3400)

34-1.	Pitot-Static System Hose Deficiencies.	1
34-2.	Potential Use of Very Low Frequency (VLF) Navigation Systems for IFR Flights.	2
34-3.	ATC Transponder Ramp Test Set Interference.	2
34-4.	Phase Relationship of 90 and 150 CPS Glide Slope Signals.	3
34-5.	Correlation of Test Signals With Flight Path Deviation Indicator Pointers.	4
34-6.	Maintenance of Pitot-Static Systems on Jet Aircraft With Additional Air Data Equipment Installed.	4
34-7.	Maintenance of Pitot and Static Systems.	5
34-8.	Caging of Artificial Horizons.	5
34-9.	Repair and Overhaul Information—Instruments.	6
34-10.	Magnetic Direction Indicators.	6
34-11.	Wilcox Electric Company Model 806A/806C VOR Navigation Receiver.	7
34-12.	Maintenance of Airborne Weather Avoidance Radar.	9
34-13.	Boeing 707 ATC Transponder Operation.	10
34-14.	Boeing B-727 Aircraft—VOR Flush-Mounted Antennas.	10
34-15.	Boeing Model 747 Aircraft—Pitot-Static System.	11
34-16.	Boeing Model 747 Aircraft—Inertial Navigation System Damage.	11
34-17.	McDonnell Douglas DC-8-62 and -62F Aircraft—Crushed Static Lines.	12
34-18.	Gables-Radio Control Panels—Frequency Selector Counters.	12
34-19.	Radio Frequency Interference Experienced With King KI-213 and KI-214 Glideslope/Omni Bearing Selector/ILS Indicators.	13
34-20.	Boeing Model 737 Aircraft—Pitot Static System.	13
34-21.	Marker Beacon Antenna Model AT 536/ARN.	14
34-22.	Boeing Model 747 Aircraft—Pitot-Static System.	14

Page No.

34-23. Boeing Model 727-200A Aircraft--VOR Interference. 15
34-24. Angle-of-Attack Sensors--DC-10. 15
34-25. VOR/LOC Dorne and Margolin Antenna. 16
34-26. Ground Proximity Warning System. 16
34-27. Falcon Model 20 Aircraft--VOR Interference. 17
34-28. Collins Radio Group Model 51RV-1 VOR/ILS Navigation Receiver. 17
34-29. Equipment Requirements: Aircraft Carrying Passengers Under IFR - Section 135.163(h). 18
34-30. Use of Integral Vibrator With Counter-Drum-Pointer Pneumatic Altimeters During Friction Testing. 18
34-31. Alternate Static Pressure System Requirements of FAR 135.163. 19

APPENDIX 15. OXYGEN (ATA CODE 3500)

35-1. Passenger Service Unit Oxygen Mask Doors. 1
35-2. Oxygen System Lubricants. 2
35-3. Hazards - Oxygen Bottles. 3
35-4. Oxygen Valve and Manifold Seal Deterioration. 4
35-5. Emergency Oxygen Systems Problems. 4
35-6. Portable Chemical Oxygen Units, L-1011. 5
35-7. Servicing Aircraft Oxygen Systems. 7

APPENDIX 16. PNEUMATIC (ATA CODE 3600)

36-1. F-27/FH-227 Aircraft--Pneumatic Isolation Valve. 1
36-2. B-747 Aircraft-Engine Bleed Air Distibution System. 1

APPENDIX 17. VACUUM (ATA CODE 3700) (RESERVED)

APPENDIX 18. WATER/WASTE (ATA CODE 3800)

38-1. Hazards of Ice Accumulations Separating From Aircraft in Flight. 1

APPENDIX 19. AIRBORNE AUXILIARY (ATA CODE 4900)

49-1. Douglas DC-9 Series Aircraft--APU Exhaust System Failure. 1
49-2. Boeing B-727 Aircraft-Fuel Vapors Entering the Cabin From the Auxiliary Power Unit. 2
49-3. McDonnell Douglas Model DC-9 Aircraft--Fluid Ingestion by the Auxiliary Power Unit. 2
49-4. Aircraft Structure, Systems, and Components Subjected to Overheat Conditions. 3
49-5. Boeing B-737 Aircraft--APU Drain Line and Drain Cup/Manifold Contamination. 4

Page No.

APPENDIX 20. STRUCTURES (ATA CODE 5100) (RESERVED)

APPENDIX 21. DOORS (ATA CODE 5200)

52-1. Boeing Model 747 Series Aircraft--Main Entry Door Latching Mechanism. 1
52-2. Boeing Model 747 Aircraft--No. 5 Main Entry Door Stop Pin and Bearing Replacement. 1
52-3. Boeing B-747 Loss of Pneumatic Panel Door in Flight. 2
52-4. Boeing 707-349G Series Aircraft, Main Cargo Door Skin Rupture. 3
52-5. Douglas Models DC-9-10 and -30 Aircraft--Replacement of Doorstop Setscrews. 3
52-6. Aircraft Emergency Exits. 4
52-7. DC-10 Cargo Door Seals. 5
52-8. DC-10 Forward Avionics Compartment, Lower Access Door Misalignment. 5
52-9. Douglas Models DC-8 and DC-9 Cargo Door Fitting Attach Bolt Corrosion. 5
52-10. Boeing Model 747 Aircraft--Passenger Cabin to Lower Electrical Compartment Access Door. 6
52-11. Aircraft Emergency Exit Placards--Corporate Aircraft. 6
52-12. Nihon YS-11 Aircraft Interior Overwing Exit Markings. 7

APPENDIX 22. FUSELAGE (ATA CODE 5300)

53-1. Bell Model 204B Helicopter--Use of Military UH-1B Parts. 1
53-2. Boeing Model 747 Aircraft--Keel Beam Center Web Replacement Body Stations 1265 to 1350. 2
53-3. McDonnell Douglas DC-9 Series Aircraft--Tail Cone Separation. 3
53-4. McDonnell Douglas Model DC-9 Aircraft--Tail Cone Failure to Separate. 3
53-5. B-727 Cargo Compartment--Blowout Panels. 4
53-6. McDonnell Douglas Model DC-9 Aircraft--Aft Pressure Bulkhead Acoustic Coating. 4
* 53-7. Fluid Lines Installed in Powerplant Designated Fire Zones. 5 *

APPENDIX 23. NACELLES/PYLONS (ATA CODE 5400)

54-1. McDonnell Douglas Model DC-10-10 and -30 Series Aircraft--Engine Pylon Support Members. 1
54-2. Boeing Model 747 Nacelle Strut Midspar Attach Fitting Structure Inspections. 1
54-3. McDonnell Douglas Model DC-10--Inflight Loss of Wing Pylon Trailing Edge Fairing Forward Panel. 2

Page No.

APPENDIX 24. STABILIZERS (ATA CODE 5500)

55-1. Convair 240/340/440 and all Modified Models - Empennage Inspections. 1

APPENDIX 25. WINDOWS (ATA CODE 5600) (RESERVED)

APPENDIX 26. WINGS (ATA CODE 5700)

57-1. Boeing Model 747 Aircraft--Wing Trailing Edge Outboard Fore Flap Outboard Support Lever and Track Rework. 1
57-2. Boeing Model 747 Aircraft--Wing Lower Aft Splice Reinforcement--BBL 127.5. 2
57-3. Convair 240/340/440 and Modified Models Wing Splice Fittings. 3
57-4. McDonnell Douglas DC-8-62, -62F, -63 and -63F Aircraft--Wing Skin/Pylon Doubler Cracks. 3
57-5. Boeing Model 707/720 Wing Inspections. 3

APPENDIX 27. PROPELLERS (ATA CODE 6100)

61-1. Propellers Pitch Lock Failures--Dowty Rotol Propellers. 1
61-2. Curtiss-Wright C634S-C Propeller Malfunction. 1
61-3. Allison-Aeroproducts A6441FN-606, -606A Propellers. 1
61-4. Dowty Rotol Propellers--Periodic Inspection of Hub Contact Switch Brushes. 2
61-5. Beech Model 18 and C45 Aircraft--Full Feathering Propeller/Cowling Interference. 3
61-6. Fire Resistance Integrity of Propeller Feathering System Hose, DC-3 and L-18 Series Aircraft (Reference Airworthiness Directive 55-15-3). 4
61-7. Lockheed Model L-188 Aeroproducts--A6441-FN-606 Propellers. 5
* 61-8. Brittan Norman BN-2A Islander and BN-2A MK 111 Trilander - Hartzell HC-C2TK-2B Propellers. 6 *

APPENDIX 28. ROTORS (ATA CODE 6500)

65-1. Bell Model 47 Helicopter--Pillow Block to Rotor Hub Bolts. 1
65-2. Bolkow Model BO-105C Helicopter--Tail Rotor Fork Spherical Bearing Failure. 2

APPENDIX 29. POWER PACKAGE (ATA CODE 7100)

71-1. Convair Model 600 Series Aircraft--Engine Mount Support Bolt. 1

Page No.

APPENDIX 30. ENGINES (ATA CODE 7200)
(T=Turbine/Turboprop, R=Reciprocating)

72-1.	(T)	Jet Engine Inlet Blockage and Foreign Object Ingestion.	1
72-2.	(T)	Allison 501-D13 Turboprop CV-340/440 (CV-580) Conversion Series.	1
72-3.	(T)	Corrosion of Stainless Steel Wire Braid Under Fire Sleeves on Fire Resistant Hose Assemblies.	2
72-4.	(R)	Crankshaft Failure in a Continental W-670 Engine.	2
72-5.	(R)	Powerplants--Improper Grinding of Opposed Engine Crankshafts.	3
72-6.	(R)	Crankshaft Failure, Teledyne Continental Engine.	3
72-7.	(T)	Convair CV-600 and CV-640 Series Aircraft--Engine Breather Line Seal.	4
72-8.	(T)	Pratt and Whitney JT3D Series Engines--First and Second Stage Fan Blades Flame Plate Overspray.	4
72-9.	(T)	Convair Model CV-580 Aircraft--Potential Fire Hazard--Propeller and Engine Inlet Anti-Icing Power Distribution System.	6
72-10.	(T)	Weld Repairs on Assembled Jet Engines.	7
72-11.	(T)	Boeing 727--Inflight Disc Failure.	7
72-12.	(T)	False Fire Indications From Previous Fluid Leakage.	8
72-13.	(T)	Boeing Model 747 Aircraft--Wing Tip Flutter Effects.	8
72-14.	(T)	Allison Model 501-D13 Turboprop Engine Life Limted Parts.	9
72-15.	(T)	Arc Burn of Titanium Alloy Fan Blades.	9
* 72-16.	(T)	Hot Day Exhaust Gas Temperature (EGT) Limited Engines.	10 *

Page No.

APPENDIX 31. ENGINE FUEL AND CONTROL (ATA CODE 7300)

73-1. Failure of the Carburetor Air Box Cross Vane Control—Mooney M20 Aircraft. 1
73-2. Pratt and Whitney JT9D—Fuel Flowmeter Leak. 1
73-3. Fuel Leaks at Fuel Quantity Indicator and Related Fuel Leaking Difficulties Experienced in General Aviation Aircraft. 2
73-4. Pratt and Whitney Model JT4 Turbojet Engine Fuel Pressurizing and Dump Valve. 2
73-5. Hamilton Standard Jet Fuel Control Used on Pratt and Whitney Model JT9D-3A Engine. 3
* 73-6. RDa.7 and RDa.10 Dart Engine Control Box Mounting Bolt Failure. 3 *

APPENDIX 32. IGNITION (ATA CODE 7400)

74-1. Identification of "S" Series Magneto Condensers. 1
74-2. Bell Model 206A Helicopter—Automatic Reignition Systems. 2

APPENDIX 33. AIR (ATA CODE 7500) (RESERVED)

APPENDIX 34. ENGINE CONTROLS (ATA CODE 7600) (RESERVED)

APPENDIX 35. ENGINE INDICATING (ATA CODE 7700) (RESERVED)

APPENDIX 36. ENGINE EXHAUST (ATA CODE 7800)

78-1. Boeing 747—Inadvertent Thrust Reversal. 1
78-2. DC-8 Outboard Fan Thrust Reverser Panel. 2

APPENDIX 37. ENGINE OIL (ATA CODE 7900)

79-1. Piper Model PA-28R-200 Aircraft—Engine Crankcase Oil Quick-Drain Valve. 1

APPENDIX 38. STARTING (ATA CODE 8000) (RESERVED)

APPENDIX 39. TURBINES (ATA CODE 8100) (RESERVED)

APPENDIX 40. WATER INJECTION (ATA CODE 8200) (RESERVED)

APPENDIX 41. ACCESSORY GEARBOXES (ATA CODE 8300) (RESERVED)

CROSS REFERENCE INDEX
ALPHABETICAL BY MANUFACTURER

Manufacturer/ Bulletin No.	Subject	Appendix No.	Page No.
ALLISON			
61-3	Allison-Aeroproducts A6441FN-606A Propellers.	27	3
72-2	(T) Allison 501D13 Turboprop CV-340/440 (CV-580) Conversion Series.	30	1
72-14	Allison Model 501D13 Engine Life Limited Parts	30	9
BELL			
53-1	Bell Model 204B Helicopter - Use of Military UH-1B Parts.	22	1
74-1	Identification of "S" Series Magneto Condensers.	32	1
BENDIX			
74-1	Identification of "S" Series Magneto Condensers.	32	1
BOEING			
107	Ground Personnel Safety Precautions - Jet Engine Danger Zones.	Chap 3	65
158	Self-Locking Nuts - Defective Locking Feature.	Chap 3	104
21-1	Boeing 707/720 Aircraft Pressurization System Malfunction.	1	1
23-2	Static Discharge Damage and Effect on VHF Communication.	3	1
23-5	Aircraft HF Communication Systems and Corona Discharge.	3	3
23-7	Granger Associates - Static Dischargers.	3	5
24-2	Electrical Wiring Corrosion in Lavatory Areas.	4	1
24-4	Boeing 727 Series Aircraft - Circuit Breaker Contamination Fire Hazard.	4	2
25-3	Maintenance of Aircraft Buffet Equipment, Baggage Retainers and Movable Equipment Located in the Passenger Compartment.	5	5
25-17	Boeing 747 Aircraft - Escape Slide Inflation Hose Coupling Connector Inspection.	5	13
25-11	Boeing Model 747 Aircraft - Conversion of Vacant Life Raft Compartments for Stowage.	5	10
25-18	Boeing Model 747 Aircraft - Escape Slide Gas Generator Security.	5	14
25-12	Boeing Model 747 Aircraft - Main Cabin Ceiling Panel Security.	5	10
25-19	Boeing Model 747 Aircraft - Main Entry Door Girt Bar Support Brackets.	5	14
27-6	Boeing 707 Series Aircraft - Spoiler Hydraulic System.	7	3

Manufacturer/ Bulletin No.	Subject	Appendix No.	Page No.
BOEING (continued)			
27-7	Boeing 720 Aircraft Cable Failure.	7	4
27-9	Boeing 727 Series Aircraft - Elevator and Aileron Balance Panel Hinges.	7	5
28-4	Boeing Model 747 Aircraft - Fuel Line Coupling Inspection and Modification.	8	4
29-1	Boeing B-727 Series Aircraft - Loss of System "A" Hydraulic Fluid.	9	1
32-5	Boeing 727 - Landing Gear Wheel Failures.	12	5
32-10	Boeing 727 Aircraft Landing Gear Control System.	12	8
32-8	Boeing B-747 - Landing Gear Control Module.	12	7
32-9	Boeing Model B-747 Series Aircraft - Main Wheel Bearings.	12	7
32-13	Boeing Model 707/720 Series Aircraft - Nose Landing Gear Failed to Extend.	12	10
32-14	Boeing Aircraft - Nose Landing Gear Failure To Extend.	12	11
34-13	Boeing 707 ATC Transponder Operation.	13	10
34-14	Boeing B-727 Aircraft - VOR Flush Mounted Antennas.	14	10
34-15	Boeing Model 747 Aircraft - Pitot-Static System.	14	11
35-3	Oxygen System Lubricants.	15	2
49-2	Boeing B-727 Aircraft - Fuel Vapors Entering the Cabin From the Auxiliary Power Unit.	16	2
52-1	Boeing Model 747 Series Aircraft - Main Entry Door Latching Mechanism.	21	1
52-2	Boeing Model 747 Aircraft - No 5 Main Entry Door Stop Pin and Bearing Replacement.	21	1
52-3	Boeing B-747 Loss of Pneumatic Panel Door In Flight.	21	2
52-4	Boeing 707-349C Series Aircraft, Main Cargo Door Skin Rupture.	21	3
52-7	Boeing Model 747 Aircraft - Main Entry Door Girt Bar Support Brackets.	21	5
53-2	Boeing Model 747 Aircraft - Keel Beam Center Web Replacement Body Stations 1265 to 1350.	22	2
57-1	Boeing Model 747 Aircraft - Wing Trailing Edge Outboard Fore Flap Outboard Support Lever and Track Rework.	26	1
57-2	Boeing Model 747 Aircraft - Wing Lower Aft Splice Reinforcement - BBL 127.5	26	2
72-11	Boeing 727-Inflight Disc Failure	30	7
72-13	Boeing Model 747 Aircraft - Wing Tip Flutter Effects	30	8
* 32-19	Boeing Model 707 Aircraft - Wheel Failures.	12	15 *

Manufacturer/ Bulletin No.	Subject	Appendix No.	Page No.	
BRITISH				
28-7	British Aircraft Corporation (BAC 1-11) Rolls Royce Spey Series Engine.	8	6	
CANADAIR				
CESSNA				
23-9	NAV/COM Equipment - Frequency Modulation Equipment.	3	6	
32-18	Cessna Models 310/320/340/401/402/411 and 421 Series Aircraft - Landing Gear Retraction and Extension System.	12	14	
CHAMPION				
32-12	Champion Aircraft Models 7AC,7BCM,7CCM,11AC, & 11BC - Landing Gear Shock Strut.	12	9	
CONTINENTAL				
72-4	Crankshaft Failure in a Continental W-670 Engine.	30	2	
72-6	(R) Crankshaft Failure, Teledyne Continental Engine.	30	3	
CONVAIR				
* 25-21	Fire Hazard - Passenger's Reading Light System Wiring Discrepancy.	5	16	*
32-15	Convair 240/340/440/580/600/640 Series Aircraft Landing Gear Uplatch Release Cable.	12	11	
34-1	Pitot-Static System Hose Deficiencies.	14	1	
57-3	Convair 240/340/440 & Modified Models, Wing Splice Fittings.	26	3	
72-2	(T) Allison 501D13 Turboprop CV-340/440 (CV-580) Conversion Series.	30	1	
72-7	(T) Convair CV-600 & CV-640 Series Aircraft, Engine Breather Line Seal.	30	4	
72-9	(T) Convair Model CV-580 Aircraft - Potential Fire Hazard, Propeller & Engine Inlet Anti-Icing Power Distribution System.	30	6	
* 71-1	Convair 600 Series Aircraft - Engine Mount Support Bolt.	29	1	*
CURTISS-WRIGHT				
61-2	Propeller Pitch Lock Failures - Dowty Rotol Propellers.	27	1	
DOUGLAS/McDONNELL DOUGLAS				
106	Electrical Discharge Method (ELOX) for Drilling.	Chap 3	64	

Manufacturer/ Bulletin No.	Subject	Appendix No.	Page No.
DOUGLAS/McDONNELL DOUGLAS (Continued)			
26-1	McDonnell Douglas DC-8 Sixty Series - Fire Agent Discharge and Agent Low Pressure Indicating System.	6	1
27-1	Douglas DC-7B Aileron Bellcrank Failures.	7	1
27-2	DC-3 Aileron Control Rod Attachment Failure & Internal Corrosion in Push-Pull Tubes.	7	1
27-8	McDonnell Douglas DC-9 Series - Horizontal Stabilizer Oscillation.	7	4
27-16	DC-10 Angle of Attack Sensor Exposure to Damage.	7	8
28-5	Fuel Pressure Transmitter Damage During Defueling, Douglas DC-8 Aircraft.	8	5
32-16	Taxiing DC-8 at Low Speed with Cockpit Anti-Skid in Flight Mode Position.	7	12
32-17	McDonnell/Douglas DC-9 Aircraft Landing Gear Control Lever - Improper Installation of Center Instrument Panel.	12	13
33-2	McDonnell-Douglas Model DC-9 Aircraft - Fire Hazard, Flight Attendant Aft Work Light - Electrical Circuitry.	13	2
34-17	McDonnell Douglas DC-8-62 & -62F Aircraft - Crushed Static Lines.	14	12
35-5	Emergency Oxygen Systems Problems.	15	4
49-1	Douglas DC-9 Series - APU Exhaust System Failure.	19	1
52-5	Douglas Models DC-9-10 & -30 Aircraft - Replacment of Doorstop Setscrews.	21	3
53-3	McDonnell Douglas DC-9 Series - Tail Cone Separation.	22	3
53-4	McDonnell Douglas DC-9 Aircraft - Tail Cone Failure to Separate.	22	3
57-4	McDonnell Douglas DC-8-62/-62F/-63F Aircraft - Wing Skin/Pylon Doubler Cracks.	26	3
FAIRCHILD			
26-2	Fairchild F-27 & FH-227 Aircraft - Walter Kidde Fire Extinguisher Systems.	6	1
27-3	Fairchild F-27 & FH-227 - Elevator Trim Tab Difficulty.	7	2
27-4	F-27 & FH-227 Series - Aileron & Elevator Hinge Bearings.	7	2
27-5	F-27 Series - Wing Flap Drive & Control System.	7	2
32-6	F-27 & FH-227 Series - Main Landing Gear Actuator.	12	6
32-7	F-27 Aircraft - Landing Gear.	12	6

Manufacturer/ Bulletin No.	Subject	Appendix No.	Page No.
FAIRCHILD (Continued)			
36-1	F-27/FH-227 - Pneumatic Isolation Valve.	16	1
61-1	Propeller Pitch Lock Failures - Dowty Rotol Propellers.	27	1
GENERAL DYNAMICS			
72-7	(T) Convair CV-600 & CV-640 Series Aircraft - Engine Breather Line Seal.	30	4
HAMILTON STANDARD			
KOLLSMAN			
31-2	Kollsman Sensitive Altimeter Balance Arm Failure.	11	1
LOCKHEED			
25-14	Lockheed L-188 Aircraft - Control Column/Seat Interference.	5	11
27-10	Failure of Wing Flap Attach Bolts, L-188 Aircraft.	7	5
27-11	Lockheed L-188 Wing Flap Torque Tube Failures.	7	5
27-13	Lockheed Models 049 Through 1049, and 1649A Series Aircraft - Elevator Trim Tabs.	7	7
28-6	Lockheed 14 and 18 Series Aircraft - Fuel Tank and Engine Selector Valve Handle Retaining Pin Failure.	8	5
32-11	Lockheed L-382 Series Aircraft - Main Landing Gear Jackscrew Failure.	12	8
MARTIN			
27-12	Martin 404 Aircraft Aileron Counterweight Vane Bracket Failure.	7	6
MOONEY			
73-1	Failure of the Carburetor Air Box Cross Vane Control - Mooney M20 Aircraft.	31	1
PRATT & WHITNEY			
72-8	(T) Pratt & Whitney JT3D Series Engines - First and Second Stage Fan Blades Flame Plate Overspray.	30	4

Manufacturer/ Bulletin No.	Subject	Appendix No.	Page No.
PRATT & WHITNEY			
72-10	(T) Weld Repairs on Assembled Jet Engines.	30	7
73-2	Pratt & Whitney Model JT9D Engine - Fuel Flowmeter Leak	31	1
73-4	(T) Pratt & Whitney Model JT4 Turbojet Engine Fuel Pressurizing and Dump Valve.	31	2
STITS			
27-15	Amateur Built Stits Playboy Model SA-3A Stabilizer Attachment Design.	7	7

CHAPTER 1. INTRODUCTION

*1. MAINTENANCE BULLETINS. Maintenance bulletins are issued to:

a. Alert all inspectors to situations or conditions that are potential safety hazards.

b. Inform inspectors of unusual or unique inspection procedures.

c. Advise inspectors of findings which, while not considered potentially hazardous, are of such a nature that knowledge of them will enable inspectors to more competently perform their surveillance activities.

2. TYPES OF MAINTENANCE BULLETINS. Two types of maintenance bulletins are in use today:

a. Routine maintenance bulletins are generally initiated by airworthiness/avionics inspectors assigned to air carriers, travel clubs and air taxi operators of large aircraft. They are originated when a situation or condition is considered to be unique or important enough to be brought to the attention of other inspectors, operators or owners. When approved, these bulletins are published in this order as routine maintenance bulletins.

b. Telegraphic Maintenance Bulletins (GENOTS). The GENOT system is used where rapid transmission of information to the field is deemed necessary. Their purpose is to alert inspectors of unsatisfactory or potentially unsafe conditions which, having been found on one or two aircraft, might well exist on others. In addition to highlighting maintenance problems, these GENOTS are occasionally used to solicit technical information from the field regarding the results of fleetwide voluntary inspections performed by operators in response to their having been notified of a problem. In most cases, the technical input received as a result of such inspections will be directed to the type certificate controlling region. This will be decided by the Washington office at the time of issuance, and appropriate instructions will be included in the GENOT. Information of this type can be helpful in deciding whether or not there is a need for Airworthiness Directive (AD) action. The indiscriminate use of a telegraphic maintenance bulletin, or its use in lieu of an AD or as an interim procedure pending issuance of an AD, must be avoided.

3. PROCEDURES FOR INITIATING ROUTINE MAINTENANCE BULLETINS. When initiating a maintenance bulletin, a technically accurate text is a must. Technically accurate means one that will not require rewrite or further research before publication. Additionally, since there are no regulatory requirements requiring compliance with these bulletins as far as the aviation public is concerned, mandatory words must be avoided except where necessary to convey a manufacturer's recommendations. When it becomes necessary to use mandatory words, clearly attribute them to the manufacturer. *

* a. Field Offices. When an airworthiness or avionics inspector becomes aware of a situation or condition that he feels is important enough to warrant the notification of other inspectors and operators, he will:

(1) Prepare a technically accurate text and forward it to the Chief, Air Carrier Division, AFS-200, through regional channels.

(2) When the initiating inspector and the type certificate controlling office are in the same region, the manufacturer should be approached, if necessary, for his comments through the regional office prior to forwarding to AFS-200. While the manufacturer's concurrence is not required, his recommendations may assist in clarifying and/or validating the nature of the problem and might possibly provide a corrective procedure.

(3) When the initiating inspector and the type certificate controlling office are in different regions, the inspector shall send the proposed maintenance bulletin to AFS-200 (through regional channels) where necessary coordination will be effected with the type certificate controlling region.

b. The Air Carrier Division, AFS-200, in addition to the coordination required in paragraph 3.a:

(1) May, when the initiating inspector and the type certificate controlling office are in different regions, request that the controlling regional office approach the manufacturer for comments or concurrence and provide Washington with the information.

(2) Will review the proposed maintenance bulletin for grammatical and technical accuracy.

(3) Will, where the accuracy is in question, coordinate with the initiating office, through regional channels, to resolve the problem.

(4) Will obtain the necessary coordination from the appropriate Washington elements, then prepare the finished product for printing and distribution.

4. PROCEDURES FOR ISSUING TELEGRAPHIC MAINTENANCE BULLETINS (GENOTS) (RIS: FS 8300-4). When an item is of such a nature that the initiating office feels immediate notification of all inspectors is imperative, the following action will be taken:

a. The initiating office will telephone the Washington Headquarters as follows:

(1) Maintenance matters to the Air Carrier Airworthiness Branch, AFS-230.

(2) Avionics matters to the Avionics Staff, AFS-206. *

* b. When telephoning Washington to initiate a GENOT, the initiating office should have available the circumstances, conditions and background involved with the unsatisfactory condition to facilitate proper evaluation and handling of the matter by the Air Carrier Division. A suggested text for the GENOT should be offered which should be accurate, concise, brief and should embody sufficient technical and background information to be of real value to other Flight Standards offices.

c. The Air Carrier Division will formulate a message based on the information provided by the initiating office.

d. This message will be sent as a telegraphic notice. This is done in the form of a GENOT dispatch via wire service "B" and, since field offices are included among the addresses, redistribution by regional offices will be unnecessary.

5. FOLLOWUP OF TELEGRAPHIC MAINTENANCE BULLETINS (GENOTS).

a. Where an AD has been issued as a corrective measure in response to an unsatisfactory condition cited in a GENOT, no further action will be necessary. All GENOTS are self-canceling.

b. If an AD is not issued and it is decided that the technical information contained in the GENOT should remain available to all inspectors, a routine maintenance bulletin will be published by the Air Carrier Division and incorporated in this order. This will be done only when there is a sound reason for perpetuating the GENOT information.

6. HANDLING AND USE OF MAINTENANCE BULLETIN INFORMATION UPON RECEIPT BY INSPECTORS.

a. Routine Maintenance Bulletins.

(1) Air Carrier. Depending on the seriousness of the item, routine bulletin information can best be handled by the inspector by bringing the matter to the attention of his assigned operator during his normal day-to-day surveillance activities.

(2) General Aviation. Because of the widely scattered nature of general aviation, inspectors are not expected to reach each and every general aviation operator or owner. General aviation inspectors should, however, make the bulletin information available during subsequent visits and contacts with operators, repair stations and holders of inspection authorizations.

b. Telegraphic maintenance bulletins (GENOTS) require expeditious notification of the operators/owners since they generally contain important safety information or recommend special inspections. Notification instructions will be contained in the GENOT. *

*7. RESPONSIBILITY FOR APPROVAL, REVISION OR CANCELLATION. While final responsibility for the issuance, revision or cancellation of all maintenance bulletins rests with the Air Carrier Division, AFS-200, inspectors are encouraged to submit items they feel are appropriate for use as maintenance bulletins. Recommendations are also invited concerning the change or cancellation of existing bulletins. *

8.-50. RESERVED.

CHAPTER 2. MAINTENANCE BULLETINS - NUMBERING SYSTEM

51. EXPLANATION OF ATA CODE. ATA Specification No. 100 establishes a standard for the presentation of technical data by an aircraft, aircraft accessory, or component manufacturer. This specification uses a conventional numbering system with a two-digit chapter number applied for each major aircraft system as follows:

21.	Air Conditioning	53.	Fuselage
22.	Auto Flight	54.	Nacelles/Pylons
23.	Communications	55.	Stabilizers
24.	Electrical Power	56.	Windows
25.	Equipment/Furnishings	57.	Wings
26.	Fire Protection	61.	Propellers
27.	Flight Controls	65.	Rotors
28.	Fuel	71.	Powerplant
29.	Hydraulic	72.	(T) Engine Turbine/Turboprop
30.	Ice and Rain Protection	72.	(R) Engine Reciprocating
31.	Instruments	73.	Engine Fuel and Control
32.	Landing Gear	74.	Ignition
33.	Lights	75.	Air
34.	Navigation	76.	Engine Controls
35.	Oxygen	77.	Engine Indicating
36.	Pneumatic	78.	Engine Exhaust
37.	Vacuum	79.	Engine Oil
38.	Water/Waste	80.	Starting
49.	Airborne Auxiliary Power	81.	Turbines
51.	Structures	82.	Water Injection
52.	Doors	83.	Accessory Gearboxes

52. SYSTEM FOR NUMBERING OF BULLETINS. Each Bulletin pertaining to a particular aircraft system is shown in the appropriate appendix and numbered as follows: ATA Code, dash, and bulletin number. For example, Bulletin 21-1 is the first bulletin on Air Conditioning (Code 21); 57-4 is the fourth bulletin on Wings (Code 57). Maintenance bulletins of a general nature, which do not fit an ATA Code, are contained in Chapter 3 of this order.

53.-100. RESERVED.

CHAPTER 3. MAINTENANCE BULLETINS: GENERAL INFORMATION

SECTION 1. SAFETY PRACTICES

101. TEST CELL ACCIDENT WHICH RESULTED IN THE DEATH OF A MECHANIC. A mechanic was killed by being drawn into the sound suppressor of an unhoused jet engine test stand located approximately 50 feet from a control shed.

Two mechanics located inside the control shed began testing a JT4 engine. A leadman later arrived and asked if a "leak check" had been made. Having received an affirmative answer, the leadman said he would also check the engine for leaks. A "leak check" consists of a visual inspection of the lines and fittings for oil and fuel leakage while the engine is running. Shortly after he left the test shed, the mechanics noted a heavy vibration indication on the vibration instrument. Leaving the shed to investigate, one of the mechanics found the badly mangled remains of the leadman lying approximately 10 feet forward and to the left of the engine nose.

The mechanics' statements indicated the engine was running at "part power" (approximately 80 percent of rated thrust). Physical evidence showed that the man was drawn into the space between the tail pipe of the engine and the bell mouth of the sound suppressor. His flashlight was found 200 feet forward of the engine and small parts of his body were scattered over a wide area.

Since no one actually saw the incident, we can only guess how the man was drawn into the exhaust stream. The inspection he was performing had been done many times by himself and other mechanics but usually at idle power. It is possible that upon approaching the engine, he stumbled over one of the tie rods supporting the engine and fell so that his body partially blocked the air flow between the engine and the suppressor bell mouth. It is also possible that he had been checking a loose jack at the aft end of the engine and had gotten into a position which caused him to be drawn into the suppressor.

The reporting region recommends that all operators and agencies equip their test facilities with heavy screen guards in the area of the bell mouth of sound suppressors. They also recommend that whenever an examination or adjustment of a running engine is being made which involves a person in close proximity to any part of the engine, his movements should be constantly watched by someone in control of the engine.

This incident and the above recommendations should be brought to the attention of all operators and agencies who operate turbine engine test cells.

102. HAZARDS - OXYGEN BOTTLES. A mechanic incurred a serious personal injury while filling a portable oxygen bottle. The portable oxygen bottle was placed in a safety cylinder and attached to the oxygen filler manifold. When the manifold valve to the bottle was opened, a flash fire and explosion separated the regulator parts, outlet fittings, and a pressure-bleed fitting from the bonnet and the bonnet separated from the cylinder. Approximately 50 percent of the cylinder bonnet-retaining threads were burned away.

The following procedures and precautions should be periodically checked:

a. Personnel should be properly trained and acquainted with the hazards in oxygen handling.

b. Cylinders should be carefully handled, proper racks should be provided to prevent tipping and damaging cylinders, and covers should be provided to protect valves during moving.

c. Area where oxygen is stored should not be subject to high temperatures.

d. Oil or grease is especially dangerous around oxygen. Precautions to keep these off the hands and clothing of personnel servicing oxygen should be taken.

e. Smoking should be forbidden in the area of bottle-refilling.

f. The storage area should be well ventilated.

g. Electrical fixtures should be explosion proof.

h. Signs regarding oil and grease should be prominently displayed at the filling area.

i. Pressure cylinders that serve as aircraft equipment, and that are maintained under an air carrier's continuous maintenance program, shall be inspected, hydrostatically tested, and life-limited in accordance with the provisions of CFR 49, Subtitle B, Chapter 1, Part 173.

Inspectors should determine that air carriers have procedures to ensure safe handling of oxygen, and spot checks should be made of the actual handling and recharging of oxygen cylinders.

103. GROUND SERVICE CART EXPLOSION. An operator experienced an explosion of a service cart used to service the constant speed - drive starter (CSDS) unit of the BAC 1-11. A mechanic connected a nitrogen bottle to charge the air cylinder in the service cart. As the air charge started to enter the cylinder, the cylinder exploded, causing a hole about 12 inches in diameter in the fuselage of an aircraft. The mechanic was injured, but not seriously.

a. The service cart consists of two tanks; one for the product and one for the air. The two tanks are interconnected by regulators and gauges. Each tank is equipped with relief valves that are set to relieve at 100 p.s.i. A test of the relief valves showed that they were operating properly. The service cart was manufactured locally.

b. Investigation of the cylinder revealed that the probable cause of the failure was weakened cylinder walls that had been subjected to wear at the clamps that held the cylinder on the cart. The inside of the cylinder showed no evidence of corrosion or pitting.

c. To preclude the possibility of similar occurrences, the operator inspected all cylinders for wear. The clamps holding the cylinders on the cart were lined with a gasket material to eliminate wear in this area. Many similar types of service carts, subject to the same type of failure, are probably in use throughout the aviation industry, particularly in the servicing of turbine-powered aircraft.

d. It is recommended that all operators provide instructions for the proper maintenance and inspection of ground support equipment to assure that it is in a safe operating condition.

104. HEALTH HAZARDS ASSOCIATED WITH AIRCRAFT FLUIDS. Periodically, incidents are reported wherein maintenance personnel inadvertently have come in contact with fluids used in the various aircraft systems. These fluids are, in many instances, toxic and can pose a health hazard to the individual involved. For this reason, it is essential that treatment be prompt and proper to minimize prolonged illness and any serious after effects.

Information relative to specific fluid properties is usually on the shipping containers or is available from the manufacturer or distributor. It is advisable that this information be reviewed periodically by persons handling fluids or maintaining aircraft.

105. HAZARDS ASSOCIATED WITH UNATTENDED AIRCRAFT. Several jet transport aircraft have been severely damaged by fires which originated inside the aircraft while the aircraft were parked and inadequately attended for some period of time with ground electrical power applied. It is probable that the fires would not have occurred, or certainly would not have assumed major proportions, if the aircraft had been properly attended during the time periods involved.

Operators' procedures should assure that aircraft are attended by qualified personnel when the internal or external electrical power, cabin air-conditioning, or other ground service equipment is connected to aircraft and operating. These precautions are especially important when an aircraft is parked in congested passenger terminals or maintenance areas.

106. ELECTRICAL DISCHARGE METHOD (ELOX) FOR DRILLING. While on takeoff roll, a Delta DC-9 rotated and became airborne about 20 knots below the computed takeoff speed. This occurred without movement of the pilot's control column, and attempts to lower the nose were unsuccessful. The takeoff was aborted and later inspections revealed that an elevator control rod end was broken and resulted in the elevators being "jammed" in the nose-up position.

An analysis of the broken rod end showed that it failed as a result of stress corrosion. Further, a sectioned portion of the failed rod end contained a piece of broken drill embedded in the side wall of the hole. The surface of the lube hole appeared jagged, and the material surrounding the hole showed decarbonization. These conditions were the result of using the electrical discharge method (ELOX) to extract part of a drill that broke while drilling the rod end lube hole. The jagged surface precipitated the stress corrosion mechanism and the ensuing crack which originated at the wall of the lube hole and worked outward. The crack did not initiate from the area of the embedded piece of drill.

Local investigations showed that the ELOX method of drilling or cutting may be in wide use by machine shops. They have treated it just as another shop tool, whereas it would appear that very strict standards and quality control methods should be established when it is used. It has wide use in manufacture of odd-shaped holes and is particularly used with the high strength steels as found on landing gears.

107. GROUND PERSONNEL SAFETY PRECAUTIONS - JET ENGINE DANGER ZONES. A mechanic was ingested into the inlet of an operating JET engine.

a. Investigation revealed that the mechanic was trimming the left engine of a B-737 aircraft. Because a city ordinance required noise suppression, an engine noise suppressor was being used to reduce the noise to acceptable limits. The suppressor unit, which was secured forward of the operating engine, disrupts normal airflow by causing a divergent flow of air from above and along the sides of the engine. Immediately after trimming the left engine fuel control, the mechanic stood up into the abnormal airflow and was drawn into the engine.

b. Fortunately, another mechanic assisting on the same job observed this occurrence and immediately went to the aid of the stricken mechanic and prevented further ingestion by holding on to the mechanic's legs. A third mechanic in the cockpit noting the adverse engine condition immediately secured the engine and on exiting the aircraft was instructed to call an ambulance. Examination at the hospital revealed that the mechanic suffered multiple scalp, leg, arm and hand injuries.

c. Subsequently, the operator issued instructions requiring mechanics to use a shoulder/waist harness with a wing cable attachment during engine trim operations. This harness limits the mechanic's movements to the engine accessory area. The operator initiated a program to obtain remote control units for engine trim. These units, when hooked up to an engine, permit a mechanic to set engine trim from the cockpit. In addition, the operator considered the use of a protective engine inlet screen. These screens are currently used by the Boeing Airplane Company and have been found to be the best protective device to prevent ingestion.

d. In view of the seriousness of incidents of this nature, we recommend that:

(1) Assigned inspectors bring this information to the attention of all operators for action as necessary.

(2) The operator's maintenance program should be reviewed to determine that adequate training and procedures are provided for ground personnel working in the vicinity of operating engines.

(3) Assigned inspector's surveillance efforts should include a careful assessment of the operator's ramp safety discipline and timely steps should be taken to correct any deficient condition or procedure.

108. EMERGENCY LOCATOR TRANSMITTER BATTERY PACKS - MERCURY CELL. Most manufacturers use magnesium or alkaline cells to power their ELTs. An individual or a repair station may attempt to construct a battery pack by soldering mercury cells together. Excessive heat applied to the cells during the soldering process can create mercury fulminate which is highly explosive. Degrading of the cell seal may occur causing leaks and a shorter shelf life. Excessive heat can also create internal shorts or start internal corrosion.

Assembly of mercury cell battery packs by repair facilities should be discouraged. Battery packs should be obtained through the ELT manufacturer or from a battery manufacturer.

Maintenance/avionic inspectors should bring this matter to the attention of ELT repair facilities within their assigned areas.

109. EMERGENCY SYSTEMS INSPECTION PERIODS. There have been several incidents where emergency systems such as fire extinguishers and fuel dumping were inoperable because of corrosion. It has been the accepted practice to inspect and functionally check these systems at intervals established by flight hours. As the daily utilization of older type aircraft decreases, the possibility of emergency systems becoming inoperable due to corrosion and deterioration increases because of calendar time between inspections.

It is recommended that inspectors having air carrier certificate responsibility review the operator's maintenance programs concerning emergency systems. If the number of days between inspection and functional checks appears to be excessive, consideration should be given to the substitution of calendar time in place of flight hours to establish inspection periods.

110.-149. RESERVED.

110. POTENTIAL FIRE HAZARDS - SILVER CONDUCTORS D.C. AND GLYCOL SOLUTION. An aircraft manufacturer, evaluating an aircraft incident report associated with a limited electrical fire, concluded that the fire was caused by the incompatibility of silver coated wire or connectors with a water glycol solution.

An inflammability hazard exists when silver or silver plated conductors impressed with direct current potential are saturated with water/glycol solutions. The positive (anodic) conductors must contain silver and the negative (cathodic) may be of any conductive material. If the anode and cathode are in sufficient proximity to permit current (in the millampere range) to flow through a glycol solution which has contaminated the space between the two conductors, oxidation is rapid and an intensely hot flame appears. This phenomenon is not known to occur when the anode is other than silver or when the impressed voltage is alternating current.

Glycol deicing or air conditioning fluid has a low surface tension and tends to seep into unexpected areas. If the contaminated area houses loose connector seals and frayed insulation over silver plated conductors, a galvanic cell can be created. An external, anodic D. C. voltage of approximately 1.55 V must be maintained on the silver for the reaction to progress. Rehumidification of an old, glycol-contaminated area may reactivate the hazard. Manufacturers of glycol are being made aware of this phenomenon.

Wiring, switches, circuit breakers, and other components which contain, or might contain, silver surfaces conducting direct current must be protected against moisture/glycol contamination.

Recommendation. This phenomenon should be brought to the attention of the assigned operators.

*111. Maintenance Shift Turnover Procedures. Over the years some aircraft accidents/incidents have been attributed to the inflight separation and loss of engine cowling, fairing, access doors, etc. In some of these cases, the losses occurred because of improper installation of the part in question.

An improper maintenance practice figured significantly in the recent loss of the engine core cowling on a DC-10. Indications are that the cowling was not properly and securely installed following maintenance on the engine.

Investigation revealed that the right core cowl had been removed to facilitate troubleshooting and remained off for approximately five work shifts. When the troubleshooting was finished, a mechanic reportedly set the inboard core cowl into position on the engine and secured it with one bolt (no nut). On the following work shift, the maintenance personnel assumed, since the cowl appeared to be attached*

*at the top, that all three nuts and bolts were properly secured and proceeded to close and secure the cowl at the bottom.

The results could have been disasterous. The cowl separated from the aircraft in flight damaging the wing and the center engine.

It is believed that this accident was the direct result of improper implementation of shift turnover procedures. The procedures in the operator's manual were satisfactory, but they were not followed by the persons involved.

The maintenance personnel that ultimately closed the cowling had no real or detailed knowledge of what maintenance had, or had not been, performed by previous work shifts. Lacking this information, they assumed certain work had been accomplished and proceeded on that basis.

a. Two poor maintenance practices were exhibited which lead to the accident:

(1) Maintenance personnel assumed that certain work functions had been accomplished by an earlier work shift. A good maintenance man never assumes anything.

(2) Maintenance personnel failed to follow maintenance manual procedures.

b. Assigned maintenance inspectors should:

(1) Review their assigned operators' existing shift turnover procedures for adequacy and implementation. Have changes made where necessary.

(2) Impress upon the operator, the need to stre s to his maintenance personnel that the status of work in progress should not be trusted to memory, nor should one shift assume that following shifts will know what work has been done or what work remains to be done.

Information regarding the status of a job in progress at the end of one shift, should be passed on to succeeding shifts in writing.

112. Ground Personnel Safety - Towing Procedures. During a routine pushback of an aircraft for departure, the headset man elected to ride the tow bar rather than walk. Within a short distance, the mechanic slipped under the nose wheels of the aircraft and was killed. A review of the carriers' towing procedures, as provided in the ground handling section of the general maintenance manual, were found to be too general and further refinement was necessary to provide adequate instructions to towing personnel.

*

Considering the seriousness of this accident, it is recommended that:

a. Principal inspectors bring this information to the attention of their assigned carriers with emphasis on the importance of safe practices while moving aircraft.

b. Towing procedures and training requirements should be reviewed to determine their adequacy for safe ground handling of aircraft.

113. DOUGLAS MODEL DC-3C AIRCRAFT - COUNTERFEIT AIRPLANE FLIGHT MANUAL. It has been brought to our attention that a counterfeit DC-3C Airplane Flight Manual (AFM) has been sold to an air taxi operator.

The title page of this counterfeit DC-3C Airplane Flight Manual can be identified as follows:

a. Upper right-hand corner: FAA APPROVED
Date: 12/1/67
Effective: 12/1/67

b. Signature block: FAA Approved By:
Armer M. Alcorn
Chief, Aircraft Engineering Division
Date: 7/5/67

c. Bottom of page: Prepared by:
INTERSTATE AIRMOTIVE
Lambert Field
St. Louis, Missouri

Any DC-3C Airplane Flight Manual utilizing a title page as shown above is not a valid AFM since the signature does not resemble Mr. Alcorn's and the dates are incorrect. Mr. Alcorn retired from the CAA in 1957.

All inspectors are requested to be alert regarding the above subject during routine maintenance surveillance functions.

*114. APPROVAL OF MAJOR REPAIR DATA. The number of requests received by the field office for approval of major repairs has increased in recent years. These requests are usually for data approval for major repairs performed by air carriers and repair stations that are rated for turbine engines, complex parts and components. While approval of requests is part of the normal workload, the inspector may receive requests that lack adequate substantiation. Also, requests to evaluate and/or approve major repair data may be outside the inspector speciality.

Each request from industry for data approval should be given a thorough examination, and sound judgment must be used in the handling of such projects. This is true whether the application for approval involves *

an engineering order originated by an air carrier, or a repair station with an engineering staff, or from an individual or facility entirely without engineering experience.

The inspector must be satisfied that he has the personal experience and knowledge to handle an approval request. He must find that the evidence and data submitted are complete and adequate to substantiate the request. Otherwise, he must inform the applicant either that he is requesting the help of FAA engineering to make the necessary assessment, or that the applicant should apply directly to engineering for approval. If the inspector chooses the former, it is important that he work closely with FAA engineering in the "combined approval."

Handbook 8310.4A, chapter 2, section 4, titled Major Repairs (Data Approval), covers this procedure in detail.

Be alert to avoid the so-called "tacit approval" method associated with the silent acceptance of engineering orders originating from air carriers.

*115. DEICING OF AIRCRAFT WITH ENGINES OPERATING. Aircraft taxi-through deicing facilities are presently being used which deice aircraft with the engines operating. Winter environmental conditions (wind) and the manner of application create a potentially unsafe condition if an incorrect deicer solution is inadvertently sprayed into the engine/APU inlets or contacts the exhausts when the engines or APU are operating.

Deicing fluids have a flashpoint of 215 through 245 degrees F. in their undiluted state which is within the engine/APU operating range. The numerous deicing fluids available also include some which have toxic characteristics that could affect personnel or passengers if ingested by the air-conditioning system.

The Boeing, McDonnell Douglas, and Lockheed companies have provided instructions for deicing aircraft. These instructions contain precautions concerning fluids and techniques for deicing aircraft with the engines operating. A safety hazard could exist if the manufacturers' instructions are not followed.

Safeguards should include procedures which assure that deicing fluids are diluted below critical flashpoints and that fluids are prevented from entering air ducts, air-conditioning systems, and engines/APU inlets or exhausts. Fire and emergency equipment should also be readily available.

It is recommended that principal inspectors assure that their operators' deicing procedures include the proper precautions with special emphasis on the aforementioned conditions. *

*116. CLARIFICATION AS TO EXTENT OF MANUFACTURERS' AUTHORITY IN DISPATCH DECISIONS OF AN AIR CARRIER. Many airplane manufacturers issue documents or provide responses to questions from operators involving repair and/or modification of inservice aircraft which are neither coordinated with nor approved by the Federal Aviation Administration (FAA), and confusion exists as to the status of these communications as related to dispatch of the affected aircraft into revenue service.

In the cases involving inoperative equipment or missing parts, FAA procedures provide for an approval process by inclusion in the appropriate FAA-approved document known as the Configuration Deviation List (CDL) or the Minimum Equipment List (MEL). Items of this nature not listed in these documents lack FAA approval and, therefore, must be handled through the appropriate FAA discipline or a special flight permit can be issued allowing nonrevenue ferry of the affected airplane.

In the areas of structural repair or out of tolerance damage not contained in FAA-approved documents (such as structural repair manuals, FAA-approved service bulletins, or approved maintenance procedures), FAA approval is required either by an appropriate FAA office or a designated engineering representative (DER) by means of FAA Form 8110-3, "Statement of Compliance of Aircraft or Aircraft Components with the Federal Aviation Regulations," transmitted to the FAA confirming the approval.

A major repair as defined in FAR 1 or more specifically defined in FAR 43, appendix A, paragraph (b)(1), requires FAA approval.

The many repairs classed as "minor" in the same references do not require formal FAA approval, but are required to be performed in accordance with the operator's maintenance program which is considered to contain practices acceptable to the Administrator.

Manufacturers' documents (such as all operators letters, service information letters, etc.), unless so designated, are not FAA approved and in most cases are issued without FAA coordination. In areas of missing parts, inoperative equipment or major repairs, they do not in many cases reflect FAA approval. Many times, these documents contain the manufacturers' technical opinions as to the airworthiness aspects, but quite often are vague as to their relationship to revenue flight or are merely to assure safe ferry capability. These opinions should not be construed as being an approval for revenue flight in a noncertificated configuration.

The principal maintenance inspectors are urged to relay this information to their assigned carriers and, where doubt exists as to the approval status of a given configuration, should contact the FAA regional office responsible for the certification of the affected airplane for guidance. *

117. SERVICE LIFE OF LIGHT PRODUCING CHEMICALS. During a discussion with a vendor that supplies chemical light sticks, it was discovered this product was life limited.

Holcombe Industries received STC # SA278WE, which incorporates "Hi-Lite" light sticks on emergency evacuation slides and rafts to comply with the exterior emergency lighting requirements of FAR 25.812 and FAR 121.310. The above STC specified that each "Hi-Lite" light stick have a storage life of four (4) years or must be removed from service four (4) years from the date of manufacture. One operator was not aware of this requirement, and as a result, revised their raft and slide overhaul documents to ensure compatibility with the light stick service life.

It is recommended that this information be brought to the attention of all operators using aircraft with light-producing chemical sticks on emergency equipment.

*118. POTENTIAL HEALTH HAZARDS ASSOCIATED WITH INVESTIGATION OF AGRICULTURAL AIRCRAFT ACCIDENTS. Normally, Flight Standards airworthiness inspectors are required to place aircraft accident investigation above all other job functions. Because of this priority, it is not uncommon for an inspector to depart for the scene of an accident immediately after notification. This is normal and proper in most cases.

The inspector who engages in an on-the-scene investigation of an agricultural aircraft accident, without first finding out the nature of chemicals used, their hazards, and necessary precautions to be taken, could be exposed to serious health hazards. A program is underway to obtain more detailed information on agricultural materials, their hazards, and proper handling procedures.

The following precautions should be taken regarding agricultural aircraft accident investigation:

a. Obtain from the operator or the persons for whom the operation was being conducted the name, type, and Environmental Protection Agency (EPA)-registration number of the material involved; e.g. Paraquat CL-Pesticide, EPA-registration No. 239-2186-AA.

b. With the information obtained, call the nearest EPA office or Poison Control Center to advise them of the fact that a large volume of the chemical has been concentrated in a small area. Ask for guidance and what precautions, if any, should be considered. *

NOTE: If advised to use special equipment and clothing, establish the length of time it will take for the dangers of the pesticide to dissipate.

c. Follow all instructions to the letter, even if it means the possibility of postponing the on-the-scene investigation a few days.

d. Local law enforcement agencies or personnel guarding the wreckage should be notified when special equipment or protective clothing is needed. The wreckage site should be secured for the time needed to make the area safe.

All information received from EPA or the Poison Control Center should be relayed to the appropriate law enforcement agencies who, in most cases, have already been at the scene and may need medical treatment.

119. SAFETY PRACTICES FOR AIRCRAFT TOWING.

a. Unsafe ground handling practices that involve aircraft can sometimes result in serious or even fatal injuries to personnel.

* b. A case in point: An accident occurred at a large international airport while mechanics were in the process of towing a wide-body jet aircraft using a tow tractor equipped with two enclosed cabs for the drivers; one at each end of the tractor. While the aircraft was being towed on the taxiway, a mechanic fell from a place where he had been sitting on the tractor next to one of the enclosed cabs. He was fatally injured when the aircraft wheels rolled over him. The tractor driver in that cab saw the mechanic fall, but was unable to alert the driver in the other cab to make an immediate stop. There was no provision for communications between the two tractor cabs.

c. The tractor in question has a flat area next to each driver's cab where other mechanics involved in the towing operation sometimes ride. Prior to the accident, two seats without safety belts had been installed on the flat area next to one cab. However, no seat or safety belt had been installed on the flat area next to the other cab. The fatally injured mechanic, before he fell, had been sitting on the flat area that did not have a seat or safety belt installed. Following the accident, seats and safety belts were installed on the flat areas next to each tractor cab. *

d. Principal airworthiness inspectors are requested to review their assigned operators' procedures for ground handling of aircraft to ensure that adequate provisions regarding safety are included. Reference FAR 121.135(a)(1).

e. Items of Primary Importance.

(1) The practice of personnel riding on tow tractors is to be discouraged unless seats with safety belts are installed and utilized.

(2) There should be a continuous system of communication between all members of the tow team to provide for immediate action in emergency situations.

(3) All personnel who engage in ground handling of aircraft must be familiar with and abide by the operators' safety standards.

NOTE: Additional information regarding safety practices for aircraft towing can be found in paragraph 112 of this chapter.

*120. MAINTENANCE PROBLEMS ASSOCIATED WITH THE AIR SHIPMENT OF LIVESTOCK.

a. In recent months, a unique problem was brought to light involving the air shipment of livestock via cargo/freighter and convertible passenger/cargo configured aircraft. Inadequate ventilation, particularly during the loading of livestock, produces condensation in the cabin/cargo area which can cause cabin pressurization problems after takeoff and during climb of the aircraft.

b. The most "critical" period of the livestock charter flights is the time the aircraft is on the ground for loading, taxiing and unloading; especially, in direct sunlight. The humidity created by animal breathing and perspiration generates a moisture/fog condition in the cabin which can accumulate around the cabin outflow nozzle valves during flight. The condensation can form into ice which could eventually minimize automatic modulation of the outflow valves. This has been known to cause return of a flight.

c. Problems resulting from this type condensation were found during conversion of a cargo aircraft to passenger configuration. This aircraft had frequently been used to haul livestock. Inspection revealed that the midcabin emergency exit window release handle assemblies had corroded from moisture, making the latch mechanisms difficult to release.

d. Recommendations.

(1) To minimize moisture buildup in the aircraft, it is recommended that during the loading and unloading of animals, the forward and aft cabin doors be open. The doors should remain open until the time of engine start and be opened immediately after engine shutdown. A constant flow of fresh air through the cabin should be provided by fans, air conditioners or both.

(2) It is essential that cabin floors, walls and areas exposed to animal waste be protected. Procedures for cleaning these areas after an animal shipment should be emphasized.

(3) Inspection of emergency exits, equipment and areas below the cabin floor should be accomplished on a regular basis to assure integrity of aircraft components and airframe structure. *

e. Principal inspectors assigned to operators who are involved in the air shipment of livestock should alert their operators to these problems and assure that they have procedures in their manual to adequately cover these situations.

121. MAINTENANCE LOGBOOK PAGE ACCOUNTABILITY.

a. A recent accident investigation revealed that several aircraft logbook pages which included entries for the day of the accident and for previous days were missing from the maintenance logbook. It was later determined that the aircraft had been flown more than 20 flight hours beyond a scheduled inspection and that some logbook pages had been falsified.

b. Federal Aviation Regulations (FAR) Parts 121 and 127 require each certificate holder to have an approved procedure in its manual for keeping adequate copies of aircraft maintenance log entries. The certificate holder must also keep a record of each airworthiness release for at least 2 months. FAR Part 135 requires each certificate holder to have an established procedure in its manual for keeping copies of aircraft maintenance logs. That procedure should include a system of accountability. FAR Parts 121, 127, and 135 require that an airworthiness release or an aircraft log entry be signed by an authorized certificated mechanic or repairman. FAR Section 43.12 prohibits the alteration or falsification of maintenance records.

c. It is realized that some operators account for maintenance logbook pages by serialization or consecutive numbering. Others use different methods.

d. Principal inspectors are requested to review their assigned operator's manual to ensure that they have an adequate procedure for maintenance logbook page accountability.

* 122. PART 135 - AVIONICS INSPECTION PROGRAMS.

a. Two air carriers have petitioned the Director of Airworthiness for reconsideration of amended operations specifications issued to them by the principal avionics inspector. These amended operations specifications included specified inspection periods and overhaul intervals for components of autopilot systems installed in aircraft having a passenger seating configuration, excluding any pilot seat, of nine passengers or less, and which are being used in place of a second in command in IFR operations. As a result of the principal avionics inspector's determination that equipment manufacturers' information was lacking regarding maintenance and inspection of the autopilot systems, the operations specifications were amended in the interest of safety. *

b. In considering the petitioners' requests, it was determined that the original operations specifications of the operators contained a commitment to follow manufacturers' inspection and overhaul times. It was also determined that besides being inadequate, the manufacturers' programs were not being followed by the operators. It would appear that a more appropriate course of action to be taken by the principal avionics inspector would have been to ensure that the operators modified the programs and complied with their original operations specifications.

c. When an operator submits its proposed inspection program, the principal avionics inspector should determine that the program is compatible with the operator's type of operations, the aircraft being used, and the environment in which the operations are conducted. Prior to approving the operations specifications, the principal avionics inspector should review and determine that the operator's inspection program is in compliance and provides the level of safety as required by the applicable regulations.

123. EQUIPMENT MAINTAINED "ON CONDITION"

a. Part 91, Subpart C - Maintenance, Preventive Maintenance, and Alterations, in pertinent parts, prescribe rules governing the maintenance of U.S.-registered civil aircraft operating within or without the United States. It also prescribes that maintenance is required.

b. Section 1.1 of the FAR defines maintenance as meaning inspection, overhaul, repair, preservation, and the replacement of parts, but excludes preventive maintenance.

c. It has been reported that some aircraft operators and some manufacturers of avionics equipment have an understanding that equipment designed and manufactured to allow for "on condition" maintenance does not require any maintenance until the equipment does not perform its intended function.

d. Regardless of references to "on condition" or "on condition procedures" by manufacturers of avionics equipment, principal avionics inspectors should ensure that:

(1) A checklist is used when accomplishing a 100-hour or annual inspection (reference § 43.15(c));

(2) The checklist used includes all avionics systems (references § 43.15(c)(1) and Part 43, Appendix D); and

(3) All avionics equipment is inspected if the aircraft is inspected in accordance with a progressive inspection or a continuous airworthiness inspection program under Part 91, Subpart D.

* 124. AVIONS MARCEL DASSAULT--BREGUET AVIATION (AMD-BA) FALCON MODEL 10 TELEFORCE CONTROL CABLES.

a. Two instances of Teleforce control cables seizing have been reported to the manufacturer. The first report involved a seized emergency nose landing gear extension control cable found during inspection. The second involved a fuel shutoff valve control cable that seized during a training flight.

b. In both cases investigation revealed inner corrosion on the threaded ends of the control cable pass-through fittings.

c. Teleforce control cables are also used for slats, main landing gear release, landing gear uplatch box release, parking brakes, and throttle levers.

d. Falcon 10 Service Newsflash No. 31 recommends compliance with AMD-BA Service Bulletin No. 218 for replacement of existing Teleforce Control Types S41 and S71-2 and Types 541-21 and 571-21.

e. Principal airworthiness inspectors with Falcon 10 responsibility are requested to ensure that Teleforce control cables are adequately covered in their assigned operator's maintenance/inspection program.

125. USE OF POLYVINYL CHLORIDE (PVC) INSULATED ELECTRICAL WIRE IN AIRCRAFT.

a. It has been reported that FAA regional policies regarding the use of PVC insulated electrical wire for modifications in aircraft vary from its use being acceptable to its use being unacceptable.

b. It has also been reported that the U.S. Air Force has discontinued the use of PVC insulated electrical wire in aircraft either in new designs or a modification due to the PVC's flammability, corrosive vapors, and toxic nature.

c. Although Advisory Circular 43.13-1A, Acceptable Methods, Techniques, and Practices, lists electric wires which are insulated with PVC, it is recommended that all airworthiness inspectors discourage but not prevent the use of PVC insulated electrical wire concerning modifications in aircraft. *

126. UNCOVERED ELECTRICAL J BOXES.

a. An air carrier operator experienced a fatal accident when a mechanic came in contact with power distribution essential bus relays located in the J23 junction box of a B-707 aircraft while working on a water valve in the lower 41 area. The J box protective cover was not installed.

b. The operator conducted a B-707 fleet campaign and found two additional aircraft with the J23 cover missing.

c. J23 covers had been removed from some of the early B-707 models due to suspected air circulation problems around the auto temperature controllers located in the J box.

d. In later models of the aircraft, the temperature controllers had been relocated outside the J box, and the power bus relays were relocated from the cockpit overhead to the J23 box. The aircraft involved was of this later configuration. The operator replaced the covers on the J23 boxes of the three aircraft.

e. Principal avionics inspectors should assure that their assigned B-707 operators are aware of this information.

* 127. AIRCRAFT DEICER FLUIDS.

a. It has come to our attention that an operator ordered glycol which was to be mixed with water by the operator's personnel per their specifications. The shipment received was labeled "Deicer Fluid" and consisted of glycol already mixed with water.

b. The operator's deicer fluid dispensing equipment contains one tank for 100 percent glycol and another for water. Mixing takes place at the adjustable mixing valve before the dispensing nozzle. The percentage of mixture is determined by temperature and precipitation conditions.

c. The operator has since included in its quality control system a means for checking incoming shipments and verification of part numbers to assure that the product received meets the specifications in its manual.

d. Failure to follow manual procedures for operating deicer fluid dispensing equipment may result in fluids being dispensed in concentrations not sufficient for the existing environmental conditions. For example, if the operator's procedure calls for mixture concentrations to be adjusted with the dispensing valve full open, a partially opened valve could dispense inadequate concentrations of fluid. *

e. Prior to the onset of winter operations, principal maintenance inspectors should bring this to the attention of their assigned operators and make certain that their quality control program covers checking of incoming shipments to assure that the product received meets the operator's specifications and that manual procedures for dispensing equipment are adequate.

f. Inspectors should pay particular attention to deicing operations during their day-to-day surveillance activities placing special emphasis on adherence to manual procedures.

* 128. RESPONSIBILITY FOR AIRCRAFT SERVICING

a. A recent aircraft accident investigation involving an air carrier, which had a contractual agreement with another air carrier for deicing its aircraft, highlighted the importance of aircraft servicing.

b. The investigation concluded that there had been little communication between the certificate holder and the contractor regarding deicing procedures for the certificate holder's aircraft. Also, the contractor's maintenance personnel had only limited familiarity with the certificate holder's model aircraft since the contractor does not operate the same model. It was further disclosed that the certificate holder's maintenance representative at that station had received limited orientation training upon his assignment to that position and that his duties and responsibilities were not well defined. It was also revealed that the contractor's deicing equipment had been previously modified and the replaced spray nozzle was not calibrated to be compatible with the mixture and delivery rate of the vehicle.

c. Federal Aviation Regulations (FAR) state that the certificate holder is primarily responsible for the airworthiness of its aircraft. The certificate holder is not relieved of that responsibility even though arrangements are made with other persons to perform work. The certificate holder must assure that all work peformed for it by a contractor is accomplished by competent/trained personnel, and in accordance with the certificate holder's manual.

d. Although this bulletin speaks to deicing, the same requirements apply to all servicing.

e. Principal inspectors are requested to bring this to the attention of their assigned certificate holders to emphasize to them their responsibility under the FAR for the proper servicing of their aircraft regardless of the person performing the work. Certificate holders should continually review their programs and contractual agreements to assure that procedures are provided for adequate servicing by competent/trained personnel.

f. Principal inspectors are also requested to review their assigned certificate holder's servicing manuals to assure the adequacy of servicing procedures, personnel training, and the maintenance of servicing equipment.

129.-149. RESERVED. *

SECTION 2. TOOLS AND TEST EQUIPMENT

150. USE OF IMPACT TYPE WRENCHES. Failures of aircraft structure have occurred which were attributed to the improper use of impact wrenches and/or the use of impact wrenches that were not operating properly. The impact wrenches were of the type used to remove recessed head screws from fuel tank access doors, stress plates, leading edges, etc. The failures reported were subsequently substantiated as having been caused by improper use of impact wrenches.

The structure failures are brought about by the application of excess vertical loads applied through the axis of the screws being removed. This excessive vertical load is applied when attempting to break the screws loose while using the impact feature of the wrench. Application of excessive vertical loads is caused by two conditions; the first is brought about by using an impact wrench that is not operating properly and the second by trying to break loose screws that are "frozen."

The type of failure that can be expected is a crack in the doubler or tang that will run parallel to the line of anchor or plate nuts installed for securing the door, plate or leading edge. All personnel should periodically review the procedures being followed by operators under their jurisdiction.

151. HYDROGEN EMBRITTLEMENT IN AIRCRAFT BOLTS. During the replating procedures of high strength bolts, a process of postplate bake treatment to relieve hydrogen embrittlement is necessary. Information has been received that some maintenance agencies (including air carriers) that are equipped to perform replating functions are not processing their work with this recommended treatment.

The specifications within which the bolts were originally plated require such treatment. Either some agencies are not aware of this important aspect of the plating process or they ignore it. We are also aware of the fact that many facilities do follow the postplate baking processes.

The use of high strength steels which have become embrittled with hydrogen has resulted, in specific cases, in failures of structures which are subjected to static axial loads below their ultimate strength. Testing has proven that these failures were caused by hydrogen which diffused into the metal during the electroplating operation. Further testing revealed that steels which are embrittled by hydrogen will fail within one week under sustained stress if failure is to occur.

In view of these failures resulting from embrittled parts, a careful control over the heat treatment, grinding, preplate cleaning, plating and postplate baking of high strength fasteners is necessary. The

design of a bolt with its many stress risers and notches, and its normal usage under conditions of high sustained and dynamic stresses, results in susceptibility to failure by hydrogen embrittlement.

The conditions outlined in this paragraph are also applicable to high strength nuts under the same conditions.

REPLATING HIGH STRENGTH BOLTS WITH POSTPLATE BAKE TREATMENT WITHIN CAREFULLY CONTROLLED CONDITIONS WILL RELIEVE HYDROGEN EMBRITTLEMENT AND THE ASSOCIATED FAILURES.

152. IMPROPER USE OF METALIZED INDUSTRIAL ADHESIVE TAPE IN AIRCRAFT MAINTENANCE. Manufacturers have developed industrial tape that has improved adhesive qualities, increased strength and a weatherproof metalized surface. These qualities tend to encourage maintenance personnel to misuse the tape. The following is a list of incidents which have occurred in aircraft maintenance:

a. The tape was used to replace a missing blowout panel in the pylon. This repair made it impossible to relieve pressurization of the area.

b. Metalized tape was used to make a temporary repair in the vertical fin area. The repair was made over the VOR antenna, which caused erratic operation of the VOR system.

c. Tape was placed on the outside of the forward galley door of a Boeing 707 to retain the door handle in a retracted position. The tape covered part of the emergency instructions for opening the door from the outside.

It is recommended that the consequences of improper use of metalized tape be brought to the attention of all operators and that adequate instructions are issued to the maintenance personnel.

153. PART FAILURE FROM STRESS RISERS CAUSED BY ELECTRICAL ARCING DURING MAGNAFLUX INSPECTION. A very serious part failure was induced by electric arcing during Magnaflux inspection. The part, an engine propeller shaft, had an eight-inch spiral crack through one of the oil holes. Metalurgical examination identified the crack as a fatigue fracture emanating from a minute electrical arc burn within the oil hole.

The operational reliability of numerous steel engine and aircraft parts may be jeopardized by improper use of Magnaflux equipment and unawareness or improper evaluation of arc burns.

Operators and agencies utilizing Magnaflux equipment should be cautioned regarding this matter. Assigned inspectors should assure that the condition of Magnaflux equipment and the procedures and training for its use are adequate to preclude induced part failure.

154. WELD REPAIRS ON ASSEMBLED JET ENGINES. An operator of P&W JT4A engines experienced in-flight shutdowns due to No. 4 bearing failures. In both instances, the pieces of the bearing races were found to be highly magnetized. Both engines had been repaired by welding accomplished on the diffuser case while the engines were assembled.

Spot checks reveal that some operators attach the ground lug to the outer case while weld repairs are being accomplished on inner parts of the engine.

High amperage electrical current passing through an engine or subassembly can cause damage to bearings, seals and other critical components.

The ground lead from the welding rig should be securely attached to the item which is to be welded in such a manner as to prevent high current flow through the engine.

Operators and agencies should be cautioned regarding this matter. Assigned inspectors should assure that maintenance procedures and instructions are adequate to preclude induced part failures.

155. WINTER OPERATION OF AIRCRAFT. Experience has shown that each winter a number of incidents and/or accidents usually occur as a result of cold weather operation of aircraft. This is probably due to the neglect of winter equipment used for aircraft servicing, deicing, and ground heating during the summer months. To alleviate this problem, each region should ascertain that field offices have an established procedure for preseasonal review of each assigned Part 121/123/127 certificate holder's program for winter operation. In recognition of this problem, an accelerated FAA ramp inspection program should be implemented to determine adherence to air carrier winter operating instructions and procedures. Emphasis should be placed on the following areas:

a. Aircraft ground heating equipment is properly serviced and in a safe operating condition.

b. Aircraft deicing and anti-icing equipment and systems are in proper condition.

c. Ground servicing equipment is available and serviceable including covers, fluid containers, adequate supply of necessary fluids properly stored and identified, and serviceability of snow removal equipment.

d. Winterizing instructions and procedures are complete, including the latest procedures and instructions concerning new equipment, and are available to concerned personnel.

Advisory circulars 20-32A, 91-13, and 150/5380-4 contain additional information on this subject.

156. PARTS AND EQUIPMENT FROM MILITARY SUPPLY FACILITIES. An Air Force Aero Club Beech Model A45 aircraft was involved in an accident that was attributed to the propeller oil seals being missing from the hub assembly. The propeller had just been drawn from an AFB supply facility and installed on the aircraft. No record or serviceability part tag was received with the propeller.

An appreciable number of light military aircraft are now available to such civil aviation activities as AF Aero Clubs and Civil Air Patrol Wings. Upon completion of necessary modifications, these aircraft are certificated and operated the same as any other civil aircraft. In many instances, parts and components for such aircraft are also supplied by or available from military supply facilities. The procurement of parts, etc., from such facilities does not relieve the installer from assuming full responsibility for the internal condition and airworthiness of the items he installs on the aircraft.

It is recommended that the responsibilities of personnel installing parts, components, and equipment on aircraft of the type identified above be brought to the attention of all persons performing such work, especially where it is known a considerable amount of maintenance is being performed by Air Force maintenance personnel and Aero Club or CAP Wing members.

157. CONTAMINATION OF AIRCRAFT FLUIDS. Water contamination and the resultant effects of corrosion were found in the hydraulic system of an air carrier aircraft involved in an accident.

Hazards associated with the use of contaminated aircraft fluids are well-known throughout the industry and need not be repeated here. What must be reemphasized, in view of the foregoing and occasional similar occurrences, are:

a. Operators' maintenance management and technical programs should be initially and periodically assessed to assure that all reasonable safeguards are present to prevent dispensing and use of contaminated aircraft fluids.

b. Careful reassessment of the operators' programs should be made immediately after any known instance of use of contaminated aircraft fluids.

c. Maintenance inspectors should determine in any case if corrective actions are necessary, and if they are, that such actions are satisfactory.

158. SELF-LOCKING NUTS -- DEFECTIVE LOCKING FEATURE. Self-locking nuts have been found loose on aircraft currently in service. Although the specific nuts found defective were installed on Boeing Model 747 engine mount universal fitting bolts, the nut sizes were such that they could be used throughout the aviation industry in a variety of applications. Boeing conducted an extensive investigation of various size self-

locking nuts, obtained from various nut manufacturers. This investigation confirmed that certain size nuts manufactured by Esna Corporation and Qmark Industries were below the minimum locking torque requirements as specified by MIL-N-25027 and Boeing Specification No. EPS-N-70.

a. Sizes and manufacturer's part numbers for the discrepant nuts are as follows:

(1) Esna Corporation, Van Nuys, California
Size 1/2-20, P/N RMLH 9074-8 (Boeing P/N BAC N10-JC-8)

(2) Qmark Industires, El Segundo, California
Size 1/2-20, P/N BMN 4122C-1D2-8 (Boeing P/N BAC N10-JC-8CM)
Size 5/8-18, P/N BMN 4122C-1S-10 (Boeing P/N BAC N10-JC-10C)

b. The Boeing Company issued Service Bulletin No. 747-71-2078 entitled, "Forward Engine Mount Attach Nuts - Inspection and Replacement." This bulletin contains the recommendation that operators of Model 747 aircraft perform a one-time inspection of the affected engine installation to ensure retention of the mount bolts.

The action that Boeing took to remove these defective nuts from both their aircraft and stock is considered adequate. These nuts, however, may have also received wide distribution throughout aviation supply channels; therefore, operators in all segments of the aircraft industry, both general aviation and air carrier, should be cautioned that some of the identified self-locking nuts may not meet specifications for minimum breakaway torque as required by MIL-N-25027.

159. FOREIGN OBJECTS IN CRITICAL AREAS OF AIRCRAFT. We continue to receive reports of "interference items" being found in critical aircraft areas. The most recently reported case concerned a bag of nuts and bolts reportedly found in a control pedestal of a large commercial jet. This bag was found when mechanics were looking into a logbook item that read as follows: "All throttles binding -feels like friction lock is on." Further investigation indicated that the bag of nuts and bolts might well have originated with an earlier windshield panel replacement. (Perhaps done while pedestal plates were open for some other unrelated work?)

The subject and contents of this maintenance bulletin should be brought to the attention of all operators and a check should be made of their inspection procedures to assure that adequate safeguards are in effect. Particular attention should be given to "buy-back" procedures and to the possibility of placing such exposure items on the "Required Item" list.

160. RF TEST SIGNALS - RADIATION INTERFERENCE. Investigation of radio frequency interference to FAA navigation facilities disclosed aviation radio repair agencies were radiating test signals from antennas which were connected to signal generators. All were using generators with a maximum power output of 1-watt on 114.9 MHz instead of the VOR test frequency of 108.0 MHz. In addition, none of the repair agencies had been licensed by the Federal Communications Commission.

It is recommended that avionics inspectors discuss this matter with operators of agencies for which they hold certificate responsibility. They may refer
* the operator to information contained in FAA Advisory Circular 170-6B *
or in the FCC Rules and Regulations, Parts 2 and 87. All agencies should be urged to seek early compliance with these requirements in order to eliminate possible sources of interference to users of radio navigation facilities.

161. AVIONIC TEST EQUIPMENT. During a repair station certification inspection, the applicant proposed to use certain test equipment which had no means of monitoring output signals. Test equipment used by repair stations for the calibration of avionics equipment should have a means for monitoring critical parameters, such as, RF level, percentage of modulation, etc. This does not include test equipment used for go-no-go tests on the ramp since this equipment can be checked against other equipment for accuracy.

During repair station inspections, Avionics Inspectors should assure that test equipment being used for avionics equipment calibration will adequately perform their functions and that critical parameters are monitored during calibration operations.

162. USAF AN/UPX-7 IFF/SIF TRANSPONDER TEST SET. For a number of years, the USAF UPX-7 transponder test sets have contributed electromagnetic interference to the nationwide Air Traffic Control Radar Beacon System. The USAF has directed major air commands to discontinue the use of all UPX-7 test sets. Although instructions have been issued to destroy the transmitting cavity of all UPX-7 equipment prior to release for sale to the public, it is conceivable some units may have been purchased by civilian repair facilities before they were deliberately disabled.

Avionics inspectors should assure that the AN/UPX-7 test sets are not being used by their assigned repair facilities.

* Field inspectors are also requested to advise AWS-350 of any other *
surplus military test equipment of questionable quality.

163. ALTITUDE ENCODER TEST EQUIPMENT. A problem was detected when a repair station bench tested an encoding altimeter prior to installation into an aircraft. The encoding section failed the test with one test set, yet functioned satisfactorily during an identical test using a test set of another manufacturer. Both test sets were found to be operating satisfactorily.

The altimeter was then installed into an aircraft and wired to a previously installed transponder. The altitude information was monitored at the transponder antenna and no discrepancies were noted on any altitude up to the service ceiling of the aircraft.

The investigation disclosed that the input impedance of the encoder lines for Test Set No. 1 was 100,000 ohms; Test Set No. 2 was 22,000 ohms; and

the transponder was 4,700 ohms. The impedance of the altimeter encoding lines was 22,000 ohms.

It should be noted that, when testing encoding altimeters, the test results may vary from test set to test set due to differences in input impedance lines. This is also true when the encoding altimeter is interfaced with transponders which have different input impedance lines; therefore, to prevent Encoding Altimeter/ Transponder interface problems going undetected, the output of the transponder should be monitored for altitude accuracy, after the installation of an encoding altimeter.

* 164. UNSERVICEABLE HARDWARE IN SERVICEABLE STOCK.

a. An air carrier operator has experienced engine power control rods coming loose on Boeing 727 aircraft. Investigation of three instances disclosed that the self-locking nuts, NAS 679 A4W, used to secure the control rods backed off and were found in the cowling and in each instance had no locking capability.

b. The specification for NAS 679 A4W nuts requires a minimum running torque of 3.5-inch pounds to a maximum of 30-inch pounds. New nuts were sampled and found to have approximately 16-inch pounds on first use. On the second use, the torque dropped to approximately 10-inch pounds.

c. The operator has a contract with a service vendor to sort hardware. They also have an internal program to conserve all serviceable hardware. Barrels are located at various work areas to collect removed hardware and hardware from the floor sweepings. When the barrels are filled they are collected and shipped to the service vendor for sorting. Parts that have obvious damage are discarded. The sorted fasteners are bagged, identified, and returned to the operator and intermixed with new fasteners as serviceable hardware.

d. The operator has curtailed reuse of any self-locking nuts.

e. Principal inspectors should assure their assigned operators have an adequate control for separation of unserviceable hardware especially self-locking nuts.

165.-199. RESERVED. *

APPENDIX 1. AIR CONDITIONING (ATA CODE 2100)

21-1. BOEING 707/720 AIRCRAFT PRESSURIZATION SYSTEM MALFUNCTION. A flight crew was unable to maintain cabin pressurization after reaching 29,000 feet. The cabin climb indicator showed a rate of 1,000 feet/minute and could not be stopped by using the full scale of the manual control. The climb rate continued while the aircraft was descending until the cabin altitude reached 14,500 feet and then the oxygen masks released from the passenger service units.

Investigation revealed that a piece of the soundproof blanket material was jammed in the aircraft outflow valve. The possibility exists wherein the blankets adjacent to the aircraft outflow valve can become unsnapped or the nylon retaining studs may become brittle and fail, causing the blanket to be drawn into the outflow valve. This was corrected by removing the blankets immediately above and below the aircraft cabin pressure outflow valve.

In view of the seriousness of this type of malfunction, we recommend that this information be brought to the attention of all B-707/720 aircraft operators for action as necessary.

21-2. McDONNELL DOUGLAS MODEL DC-9 AIRCRAFT - INSTALLATION OF THE PROPER WATER SEPARATOR DUCT CONNECTOR AND CLAMP. Repeated discrepancies involving the water separator duct connector have resulted in cabin pressurization problems, oxygen mask deployment, and flight interruptions.

Douglas Aircraft Company has issued All Operators Letter (AOL) No. 9-587C dated February 20, 1974, which recommends the replacement of Douglas P/N 82329441 series hose with the approved Arrowhead series P/N 700569 and General Connector series P/N 26A82 duct connectors. Also use only the approved duct clamp P/N WWD148. In addition the AOL states that the General Connector convoluted hose P/N DC9422 referenced in the December 1971 issue of Douglas Service Magazine and in AOL No.9-587 is NOT APPROVED for this installation.

Attention is also directed to the use of proper maintenance procedures when changing the coalescer bags, refer to the DC-9 Maintenance Manual, Section 21-20-2 and 21-20-11.

It is recommended that this information be brought to the attention of all operators using McDonnell Douglas Model DC-9 aircraft.

21-3. DC-10 RADIO RACK FANS. Several operators have reported that maintenance personnel have been making and breaking radio rack cooling fan connectors with power applied. This results in arcing and damage to the pins and sockets causing overheating and rapid deterioration of associated wiring. The heating effects in some cases have resulted in burns on the insulation blanket adjacent to the fan. McDonnell-Douglas Corporation Service Bulletin 21-78 referenced the installation as placards regarding the use of caution when performing maintenance on avionic cooling fan assemblies. Subsequently, McDonnell-Douglas Corporation has issued Alert Service Bulletin A21-80, dated February 14, 1975, which will provide for replacement of existing fans with wire harness and terminal boards in lieu of the existing connector system. In the interim period, it is recommended that principal inspectors reemphasize to their assigned operators the need to depower the radio rack fan when breaking fan assembly connectors prior to performing maintenance.

* APPENDIX 2. AUTO FLIGHT (ATA CODE 2200)

22-1. UNAUTHORIZED WORK ON AUTOPILOT SYSTEMS. It has been reported that there may be a misunderstanding by some repair stations as to who is authorized to perform work on autopilot systems. One repair station although holding a limited rating for certain types of autopilots was repairing autopilot computers and printed circuit (PC) boards of an autopilot which the repair station was not rated for. Another repair station was replacing existing autopilot PC boards with factory furnished boards although the repair station did not have an instrument rating. It is recommended that avionics inspectors remind their assigned repair stations that a certificated domestic repair station may not maintain or alter any autopilot system for which it is not rated. *

APPENDIX 3. COMMUNICATIONS (ATA CODE 2300)

* 23-1. AIRCRAFT PUBLIC ADDRESS SYSTEMS

a. A deHavilland DHC-6-100, operated by a scheduled commuter, made an emergency landing after a fire erupted in the cockpit. One passenger was killed and eight passengers and two pilots were seriously injured.

b. The National Transportation Safety Board's (NTSB) investigation of the accident disclosed several areas of concern, of which one addressed the need for properly functioning public address systems.

c. The NTSB reported that because the pre-takeoff briefing announcement was garbled and hurried, passengers said they were unaware that a fire extinguisher was located in the cabin.

d. Although the quality of public address announcements could be attributed to flightcrew microphone technique, maintenance problems may exist in some public address systems.

e. Since the public address system is used primarily for the purpose of conveying crew safety messages to passengers, principal avionics inspectors are requested to review their assigned carriers' public address system inspection and maintenance procedures in order to assure that these systems are being maintained for proper operation both on the ground and inflight.

23-2. STATIC DISCHARGE DAMAGE AND EFFECT ON THE VHF COMMUNICATION. A Boeing 707 operator experienced a prolonged in-flight VHF communications system noise problem that emanated from the aircraft's vertical fin tip area. Severe precipitation static was induced into the No. 1 VHF communication system and intermittently affected the No. 2 VHF communication system. This resulted in several system component changes, transmission line replacement, wiring and bonding inspections and, finally, removal of the vertical fin tip. Static electricity discharge had damaged the unused Loran Antenna and melted the braided bonding jumper, which was used to bond the antenna to structural ground. This allowed the isolated antenna system to become a noise generator during flight.

As a result of this incident, the operator reviewed its records for previous static discharge damage that caused electrical noise interference. The effects of the review are as follows:

a. Static burned areas on trailing edges or tips of aircraft surfaces.

b. Radome or radome static dissipation diverter strips and bonding wire jumper damage.

c. VHF blade antenna static burned rough areas along trailing edge and tip of blade.

d. HF probe antenna static burned holes and large rough static pitted areas through or on surface of probe.

e. Static discharger or dissipater probe units with base damage, dislodgments or electrolysis (pitting and/or corrosion).

f. Pitot head "Knife-Edge" opening static burned - pitted, beaded, or rolled rough edge.

g. Static burned bonding braid or wire jumpers on control surfaces and doors (landing gear and access).

h. Static burned or roughly pitted structure rivet heads at trailing edges of honeycomb panels, i.e., wing tips.

i. Severe static burns or resultant corrosion on skin structure, grounding studs and terminal areas initiated by smoke and ozone liberation during static discharge.

j. Severe direct static discharge to H. F., Loran, and other antenna areas that result in the malfunction of antenna components, protection devices, and cause smoke residue.

Experience with static discharge damage emphasizes the importance of proper maintenance to safety of flight. Some maintenance practices are: dress affected areas smooth, remove smoke residue and corrosion from affected area; properly bond components and surfaces; replace damaged hardware, structure and components.

Avionics Inspectors should bring this information to the attention of operators of jet aircraft.

23-3. UNITED DATA CORPORATION (UDC) VOICE RECORDER MODEL V-557. An evaluation of cockpit voice recorder tapes was made by FAA headquarters and National Transportation Safety Board personnel. Several were judged to be below the certification standard. This was particularly noticed on the cockpit area microphone (CAM channel)and was due to: Low recording level, Excessive "Wow" (tape speed change), and Excessive 400 Hz hum. Subsequent correspondence with the manufacturer revealed a number of service bulletins that affect the problem areas.

a. Low recording level, particularly in the CAM channel, may be reduced by performing Service Bulletins Nos. 13 and 17. These Service Bulletins provide for reduced head wear by reducing tape tension and correcting uneven tension between one side of the tape and the other.

b. "Wow," which is caused by tape speed change, may be reduced by performing Service Bulletin No. 12 and Information Bulletin No. 1. These bulletins provide for a new tape guide strip installation, periodic parts replacement and lubrication in the tape drive assembly.

Paragraph 23-3 Cancelled by Change 14 issued 10/6/75

c. Reduction of 400 Hz hum. Cable routing and shielding (within and outside the recorder) should be periodically checked for introduction of hum. Recorder performance, particularly the CAM channel, should be observed following installation of additional electronic equipment in the aircraft.

d. Inspectors should determine that their assigned air carrier(s) have a program for maintaining the recorder installation, including recording level, to the standard to which it was certificated.

23-4. FUNCTIONAL CHECK OF UNITED CONTROLS V-557 COCKPIT VOICE RECORDER. An accident investigation revealed that a V-557 cockpit voice recorder had been inoperative for a number of hours prior to the accident. A kink in the tape prevented it from passing through the recording heads and caused it to become wound around the capstan, ultimately resulting in complete stoppage of the recorder. Improperly performed operational checks had not detected the recorder condition.

a. When performing operational checks, the manufacturer's recommendations should be followed closely in order to verify the proper functioning of all recorder channels.

b. Experience has shown that when the test switch is pressed, transient voltage causes the test meter needle to move or wiggle momentarily at the time the switch contacts close and open. Persons performing the check may interpret this indication to mean the recorder is operating satisfactorily.

c. Momentary deflections of the test meter needle should not be interpreted as indication of proper operation. When performing individual channel checks using the controls on the front panel of the recorder, the meter needle should deflect into the white area of the scale and remain there for the same period of time as the test switch was pressed. When the test switch on the microphone monitor assembly is pressed momentarily, the needle should make two distinct excursions into the white scale area, each for the same duration as the test switch was pressed. This indicates that all four channels are recording.

23-5. AIRCRAFT HF COMMUNICATION SYSTEMS AND CORONA DISCHARGE. Investigation of a high-frequency communication system problem, encountered by the operator of a Boeing Model 747 aircraft, revealed a disturbance was generated at the antenna unit located in the wing tip area.

a. Corona discharge was emitted from sharp burrs on the nuts securing the electrical connection between the antenna probe and lightning arrester.

Paragraph 23-4 Cancelled by Change 14 issued 10/6/75

b. The operator determined the sharp burrs on the nuts were caused by the use of improper tools and issued a maintenance advisory with instruction to use only appropriate tools and to replace or dress smooth distorted nuts to preclude corona discharge.

c. All antenna probe attachments should be examined and either replaced or dressed smooth if gouges, nicks, or sharp points are apparent.

d. This information should be brought to the attention of all operators using jet aircraft equipped with HF communication systems.

23-6. RADAIR MODEL DART II EMERGENCY LOCATOR TRANSMITTER.

There have been many reports describing malfunctions or defects with the Dart II Emergency Locator Transmitters (ELT). Some of the reported problems ranged from the transmitters being inoperable or the operation was below certification standards specified by TSO-C61a. Other reported problems were broken cases, corrosion, intermittent operation, inadvertent activation, leaking batteries, and separation of the antenna from the case.

a. The manufacturer recommends that the two "D" size alkaline batteries (flashlight type) be replaced once a year. However, due to the reported battery problems, replacement and/or inspection should be accomplished at frequent intervals.

b. The corrosion resulted from water accumulation in the switch/antenna jack well. The manufacturer has published Service Bulletin No. 101, pertaining to fuselage installation, which provides information and procedures for drilling drain holes into the switch/antenna jack well to prevent water accumulation. In addition, the Service Bulletin also recommends that an O-ring be installed around the fingers of the access hole cover plug.

c. This information should be brought to the attention of owners and operators of aircraft which are equipped with the Dart II ELT.

23-7. GRANGER ASSOCIATES - STATIC DISCHARGERS. An air carrier experienced a high failure rate of Granger Associates type 610D-1B and 611D-1B, yellow static dischargers. Most of the failures are indicated by out-of-tolerance or open resistance measurements and do not appear to be related to time in service or aircraft type.

a. The manufacturer has determined that the most probable cause of the failures is a localized high resistance area in the small diameter resistive core, resulting in localized high I^2R (power) dissipated during heavy discharge currents. This high power dissipation exceeds the capability of the discharger.

b. To correct this deficiency, Granger Associates have changed their manufacturing procedures to eliminate the localized high resistance areas and also enlarged the core cross sectional area by more than 500 percent to increase the current handling capability. These improvements have been incorporated in all static dischargers manufactured after March 31, 1972.

c. The operator has initiated a program to perform a resistance check of all dischargers on all their aircraft (B-747, L-1011, B-707, CV-880, B-727, and DC-9) at 2,000-hour intervals. Defective dischargers will be replaced with the improved type.

d. This information should be brought to the attention of all operators using aircraft equipped with Granger Associates type 610D-1B and 611D-1B static dischargers.

23-8. CHROMALLOY MODEL ACR/RLB-6 EMERGENCY LOCATOR TRANSMITTER. There have been numerous inadvertent activations of the survival-type ACR/RLB-6 emergency locator transmitters installed on DC-10, L-1011, and B-727 type aircraft. Possible causes of the inadvertent activations are radiated energy (aircraft electronics), static electricity or condensation present in the aircraft. Anyone of the possible conditions could activate the gate of the silicon controlled rectifier (SCR) which applies the battery voltage necessary to activate the transmitter.

The manufacturer is investigating the possibility of deactivating the SCR switching circuit and has already modified the design of the arming pin to prevent premature activation because of micro-switch vibration.

Operators using aircraft equipped with Model ACR/RLB-6 ELTs should be alerted that an undetected ELT activation can discharge the battery and render the unit inoperative. ELTs should be visually and functionally checked at regular intervals to assure operational integrity. During flight, operators of aircraft should be encouraged to monitor the emergency frequency when equipment is available.

23-9 NAV/COM EQUIPMENT - FREQUENCY MODULATION INTERFERENCE. Frequency modulation (FM) interference has been experienced using ARC-300 series navigation/communication equipment, type RT-308C/328C, which was installed in 1974 models of Cessna single and multiengine aircraft. The interference has been of such magnitude to render the aircraft equipment ineffective of performing its designed functions.

a. Cessna Avionics Service Letter, AV-74-1, dated January 11, 1974, describes the changes to the 300 series equipment and also refers to ARC Service Bulletin No. 156. These changes will result in:

(1) Reduction of spurious reradiation in the communication section, and

(2) Reduction in the FM radio interference.

In addition, the Avionics Service Letter cites the action required: "Because of the importance of transmitter output frequency accuracy, the changes described in the ARC Bulletin No. 156 must be made in the affected radios as soon as practical but no later than the next 100 hours of aircraft operation."

b. It is recommended that Avionic Inspectors encourage owners and operators of aircraft equipped with ARC-300 series nav/com equipment to obtain the Cessna Avionics Service Letter and incorporate the recommended features.

*23-10 COCKPIT VOICE RECORDERS - INSPECTION AND MAINTENANCE PRACTICES. The playback performance of three cockpit voice recorders recently recovered by the National Transportation Safety Board from air carrier accidents reflects poor maintenance and inspection practices by the users. The three cases are cited below:

a. Case 1. Noise level in the cockpit area microphone (CAM) channel was extremely high and was of little value for accident analysis.

(1) Excessive dirt and oxide deposits on the recording heads.

(2) Excessive recording and playback head wear.

(3) Bias current exceeding manufacturer's limits.

(4) Tape wear excessive.

(5) Preamplifier gain was at its maximum setting rather than at the level specified by the manufacturer, thus recording a very poor signal to noise ratio. *

b. Case 2. The noise level of the CAM channel was extremely high, thus the intelligence was very limited. Inspection of the recording and playback heads revealed heavy contamination.

c. Case 3. The recorder was not recording the CAM channel; other channels were normal.

d. It is recommended that PAIs review their assigned operator's cockpit voice recorder maintenance practices to determine whether such programs are actually providing the required level of performance. Factors that should be considered are:

(1) The frequency and depth of all maintenance programs.

(2) Compliance with manufacturer's service bulletins.

(3) Head cleaning frequencies and procedures.

(4) Tape conditions - kinks and wear.

(5) Hum levels.

(6) Specified limits and procedures for operational checks.

(7) Frequency of checks to assure operation within specifications.

e. If the current programs do not provide the necessary level of inspection and maintenance to assure the required performance levels, PAIs should take the necessary steps to upgrade the program.

*23-11. EMERGENCY LOCATOR TRANSMITTER - INSPECTION AND MAINTENANCE PRACTICES. Investigation of many accidents has revealed that the emergency locator transmitter (ELT) was not operable. The problems range from dead batteries to ELT switches in the OFF position.

a. Inspectors should recommend and encourage personnel, associated with ELT operation and maintenance practices, to review FAR 91.52(b). FAR 91.52(b)(4) (Part 91 operators) requires that, ". . . an ELT must be attached to the airplane and be in operable condition."

(1) Part of being in operable condition involves placing the ELT switch in the ARM position.

(2) A second item to consider, in assuring that the ELT is operable, would be to assure that the ELT meets the requirements of FAR 91.52(d).

b. Many aircraft have ELT units mounted in areas inaccessible to the pilot. As an example, the Grumman AA1-B airplane has the ELT located in *

the aft fuselage tailcone under the removable fairing. Such installations require coordinated efforts, between maintenance and operations personnel, to determine the battery condition and the ELT switch position.

c. Inspectors should also recommend that a checklist or placard be used (similar to the following):

PILOT'S ELT CHECKLIST

(1) Check your ELT (in first five minutes past the hour).

(2) "ARMED" before takeoff.

(3) "OFF" before shutdown.

(4) Battery date " ."

(5) Monitor 121.5 once each 30 minutes while in flight.

*23-12. BENDIX RTA-43A VHF TRANSCEIVER—VOR/ILS INTERFERENCE.

a. An air carrier has experienced interference on the localizer and VOR frequencies of their navigation receivers which originates from the local oscillator in the receiver section of the Bendix RTA-43A VHF transmitter/receiver unit. The receiver's local oscillator operates on the low frequency side, 20 MHz below the selected VHF operating frequency. When communication frequencies at or above 128 MHz are selected, the spurious signal from the local oscillator falls within the localizer or VOR channels of the navigation receivers.

b. Some of the effects noted in the navigation equipment were: noise or squealing in the receiver, weak appearing receiver, flags bobbing or pulled out of view and erroneous deviation needle indications. The carrier has issued a bulletin describing this problem and cautioning the flightcrews about leaving the VHF comm frequency selector set to a frequency which is 20 MHz above the ILS frequency being used on approach.

c. Bendix Avionics Division has issued Service Bulletin M-1245 dated May 1978 to eliminate potential interference between RTA-43A and VOR/ILS receivers. This Service Bulletin includes the following: "When an aircraft is in a low (weak) signal area and the frequency selected on the VOR/ILS receiver is 20 MHz below the selected RTA-43A frequency, the LOC deviation needle can have a small offset. The amount of offset depends upon the type of VOR/ILS receiver used, cable routing of aircraft installation, etc.; therefore, an offset may not occur in all RTA-43A aircraft installations."

d. Principal avionics inspectors should bring the above to the attention of all users of Bendix RTA-43A VHF transceivers. *

23-13. AIRCRAFT PUBLIC ADDRESS SYSTEM TEST PROCEDURES.

a. An air carrier operator experiencing complaints on the quality of public address announcements has developed a new test and adjustment procedure that has resulted in optimum speaker/amplifier output and elimination of many nuisance squawks and repeat complaints. The test equipment used enables them to test and adjust the audio level of the complete PA system against a known standard.

b. The test equipment consists of two major components, a Sound Level Calibrator (SLC) and a Sound Level Meter (SLM). Both are battery operated, freeing the mechanic from the chore of dragging around extension cables. There are also two adaptors, one to hold the microphone and/or handset at the prescribed distance from the SLC and the other to hold the SLM the prescribed distance from the speaker.

c. The SLC produces an output of 90 db $\pm$ 1 db at 1000 H_z and can be coupled to the PA mike with the special adaptor.

d. The test is quite easy to perform. The PA mike is coupled to the SLC which is putting out its present signal. The mechanic then goes into the cabin, puts the SLM up to a selected speaker and reads the meter. The SLM adaptor is fitted with standoffs to assure that the mike is always picking up audio at a set distance from the speaker.

e. Previous standard practice had been to adjust the PA amplifier to a specified level. Now given a standard input, the amplifier can be adjusted to an ideal output.

f. This procedure would not make troubleshooting easier to find a shorted speaker; however, miswired, open or distorted speakers could be located easily. Mikes can be quickly compared with two or more other mikes to ascertain whether they are high, low, or distorted. If a squawk results from improper mike use, the tester can positively qualify the PA system, thus avoiding another amplifier adjustment and its attendant repeat complaint.

g. Principal avionics inspectors assigned to operators whose aircraft are subject to FAR 121.318 requirements should make them aware of the above and encourage all operators interested in improving PA system performance to develop or use similar test procedures.

23-14. DOUGLAS DC-10, LOSS OF POWER TO THE PASSENGER OXYGEN DROP SYSTEM.

a. One air carrier has experienced instances of power loss to the passenger oxygen drop system in cabin areas where harness connectors to the multiplexer system had been inadvertently disconnected. These "MUX" units are located under the seats at floor level and if not protected may be vulnerable to being struck by feet or luggage. These conditions have resulted in connectors being disengaged.

b. The possibility of inadvertent disconnect is eliminated when the protective shroud, designed and provided to secure the underseat "MUX" installation, is properly installed.

c. Principal avionics inspectors should assure that operators' manuals include adequate procedures for the reinstallation of shrouds following maintenance.

23-15. INSTALLATION OF COCKPIT VOICE RECORDER (CVR)/UNDERWATER LOCATOR DEVICE (ULD).

a. The requirement for a CVR-ULD resulted from Amendment 121-135 as part of the Airworthiness Review Program. The FAA agreed to an exception to the requirement for a CVR-ULD when the flight data recorder (FDR) (which must have a ULD under current § 121.343(f)) and CVR are installed adjacent to each other in such a manner that they are not likely to be separated during crash impact.

b. Engineering analysis has indicated that, with the present aircraft, one ULD is unlikely to be sufficient. For that reason, it is recommended that requests by air carriers for approval of ULD's be handled with STC applications to the appropriate regional engineering offices. Applicants must submit a satisfactory crash condition structural analysis to show that the FDR and CVR are not likely to be separated from a single ULD.

c. Principal inspectors should assure that all operators considering a single ULD installation are aware of the above procedures.

*23-16. COCKPIT VOICE RECORDERS - SELF-TEST.

a. A recent FAA cockpit voice recorder (CVR) operational survey resulted in an air carrier reporting an undetected failure of the CVR No. 2 channel input record amplifier, although the overhead monitor self-test was satisfactory. Shop tests determined that an adjustable potentiometer in the input record amplifier was open. It was also determined that three other components are not included in the integral self-test circuitry.

b. In response to the air carrier's request that the possibilities of a modification to the design be explored which would enhance the possibility of the self-test detecting any failure occuring within the CVR the manufacturer concluded that: *

(1) There is no practical way to enhance the capability of the CVR self-test circuit.

(2) The basic design of the CVR provides inherent redundancy of recorded information by means of the multichannel concept. Because of this redundancy, failure of a single "untested" component does not have a catastrophic effect on the vital usefulness of the CVR as an accident investigation tool.

(3) Any failure of an "untested" component will eventually be discovered during shop overhaul of the CVR.

(4) A 100 percent check of the installed CVR system can be made by:

(a) Use of the self-test feature combined with;

(b) listening to each channel by use of a headset plugged into the headphone at the microphone control unit in the cockpit.

c. Self-test circuitry analysis accomplished on another type of CVR has disclosed that all components are not included in the self-test.

d. It is recommended that principal avionics inspectors encourage their assigned operators, where applicable, to supplement the self-test with aural monitoring of each channel with a headset during scheduled maintenance checks.

*23-17. RECOMMENDED PREVENTIVE MAINTENANCE SCHEDULE FOR THE UNITED CONTROL CORPORATION (SUNDSTRAND) V-557 COCKPIT VOICE RECORDER (CVR). A recent investigation concerning the poor quality of the recording taken from a V-557 CVR, on a B-727 that crashed, has resulted in Sundstrand's issuance of a "Recommended Preventive Maintenance Schedule" for the V-557 CVR. The V-557 has a history of occasional poor performance, some of which has been attributed to maintenance. This bulletin highlights recent recommendations by the manufacturer for upgrading the reliability of the V-557 CVR which is essential for assuring compliance with FAR 43.13. Sundstrand recommends the following:

1. Encourage all users of the V-557 CVR to follow, in detail, the tests provided in the Component Maintenance Manual, P/N 980-6001, section 100, pages 101-111, steps 3A-3K. Additionally, Sundstrand will add to the above steps, flutter and erase tests, and issue revised pages to the manual by November 1, 1982.

2. Sundstrand will issue a "Recommended Preventive Maintenance Schedule for the V-557" which will provide recommended flight-hour intervals to check, replace, and clean those parts subject to wear. This document will be sent to all V-557 users on or before November 1, 1982. *

* It has been determined that the above recommended maintenance action and specified flight-hour intervals to be used are considered essential for assuring continued airworthiness of the V-557 recorder. In addition, an actual audio test by flight crewmembers at each crew change and an audio test by maintenance personnel of each recording channel at approximately every 200 flight hours will provide an acceptable program for continued operation of the V-577 CVR.

Principal Avionic Inspectors should review the maintenance programs of all operators using V-557 CVR's and encourage them to adopt the above recommendations. The Avionics Branch, AWS-350, should be informed of difficulties encountered with operators not willing to perform the checks and inspections at the frequencies specified. *

APPENDIX 4. ELECTRICAL POWER (ATA CODE 2400)

24-1. UNUSED ELECTRICAL CONNECTORS - POTENTIAL FIRE HAZARDS. A recent incident occurred wherein a large aircraft was subjected to interior damage caused by an electrical fire. Investigation determined that an unused electrical connector with operating voltage had been subjected to some damage, causing the pins to short.

Inspectors should recommend and encourage their operators to disable all electrical circuits associated with unused plugs and receptacles. In all cases, all unused electrical connectors should be either capped or taped and tied down where practicable, thus reducing the exposure of these connectors to either damage or contamination by foreign materials. Acceptable maintenance practices dictate the above recommendations.

Inspectors should bring this incident to the attention of their assigned operators.

24-2. ELECTRICAL WIRING CORROSION IN LAVATORY AREAS. There have been several cases of fires originating in the aircraft electrical systems in the lavatory areas. One series of such incidents on the Boeing 707 necessitated the issuance of AD 62-12-1.

Another operator reported two cases of corrosion on a wiring terminal strip, DDX25, in the lavatory area of the L-188. As a corrective measure, the entire terminal assembly was relocated on the aft bulkhead of the lavatory.

There have been other reports of water seeping into wire bundles located in the areas beneath the lavatory floors and causing deterioration of the insulation. If this deterioration or corrosion develops far enough, malfunctions, electrical shorts and fires are probable. Remember that condensation from pipes and tanks can produce excessive moisture as well as leaks in the lavatory system.

We recommend that assigned inspectors with certificate responsibility review their carriers' maintenance programs to determine that the lavatory areas are thoroughly inspected periodically. If electrical equipment is located where moisture is a problem, corrective action should be taken before corrosion and deterioration begin.

24-3. USE OF PLASTIC ELECTRICAL INSULATING TAPE. It has been reported that highly flammable plastic electrical insulating tape is being used during the repair and alteration of aircraft electrical systems. One report concerned foreign-manufactured tape; however, U.S.-manufactured tape may be just as flammable.

The chemical base of most plastic electrical tape is Poly Vinyl Chloride (PVC). This material is not flame resistant unless it is especially processed to make it so. Another property of PVC is that it decomposes above 250 degrees F. with a rapid loss of electrical insulating qualities.

Some manufacturers are producing flame resistant PVC tape and have obtained "UL" (Fire Underwriters Laboratory) approval; therefore, unless the tape shows such approval on the wrapping, or container, it should not be used until its flame resistant properties have been ascertained. A simple test can be made by applying the flame of a match to a sample of unknown tape and comparing its burning qualities to a sample of flame resistant tape.

PVC tape, whether flame resistant or not, should not be used in compartments whose temperaturesnormally approach 250 degrees, nor should it be used in designated fire zones unless precautions are taken to assure that the wiring will not short circuit to the airframe, shielded wires in bundles, or to any other electrical ground, in the event the PVC decomposes.

Inspectors should bring this matter to the attention of repair facilities during routine visits.

24-4. BOEING 727 SERIES AIRCRAFT - CIRCUIT BREAKER CONTAMINATION FIRE HAZARD. Investigation of a fire in the lower 43 area of a Boeing 727 aircraft revealed a three-phase circuit breaker (Boeing P/N 10-60806-35) had become contaminated to the extent that it shorted internally and burst into flame. The circuit breaker, located in the external power AC bus circuit, then burned until an overload caused the ground power unit to drop off the bus. Further examination disclosed coffee residue in the electronic and electrical equipment area of the aircraft's lower 43 compartment.

Boeing issued Service Bulletin No. 25-145, Rev. 2, dated September 2, 1969, which provides instructions for the installation of a drip shield in the electronic equipment compartment. This shield is intended to reduce the possibility of electrical malfunctions due to water or other liquids seeping into the electronic and electrical equipment racks.

It is recommended that all operators of Boeing 727 aircraft be informed of this incident. It is further suggested these operators be encouraged to incorporate the provisions of Boeing Service Bulletin No. 25-145 (as revised) on their aircraft at their earliest convenience.

24-5. CESSNA 310/320 AIRCRAFT - BATTERY CABLE. Problems have been encountered with both the original lead-acid battery installation and with field installations of nickel-cadmium batteries.

a. Electrical fires have occurred at the Adel clamp at wing rib station 89.5. The nickel-cadmium batteries installed had a terminal arrangement other than that of the original equipment batteries. The resulting strain on the positive cable caused misalignment and chafing at the Adel clamp.

b. When removing and installing the battery (including the original equipment battery), excessive pressure applied to the cable can damage the battery case grommets. With the battery in place and the terminals secured, the battery cables should not exert side pressure on the grommets. A desirable improvement would be to use nylon or other more wear- or pressure-resistant grommets at the battery case. Appropriate spacer blocks should be installed to prevent shifting of the battery and placing a strain on the cables.

c. Cessna Service Letter 66-57 dated October 18, 1966, covers some aspects of this bulletin. Owners should contact Cessna for corrective action.

*24-6. NICKEL CADMIUM BATTERY QUICK-DISCONNECT PLUG. An air carrier operator has experienced a high rate of nickel-cadmium battery problems which were reported as overtemperature, hot batteries, boiling, and loss of water in the cells. These problems were traced to worn quick-disconnect plugs manufactured by Elcon Division of Icore International, 180 N. Wolfe Road, Sunnyvale, California 94086, (telephone: 408-732-5400). While in service, a weak plug can result in a resistive connection between the battery terminals and the aircraft load.

a. Tests were conducted using both a new and a worn quick-disconnect plug, and a continuous electrical load of approximately 750 amperes. The worn plug became hot to the touch while the new plug remained cool. During this test, the voltage drop between the battery terminal and the worn plug was 225 millivolts versus 40 millivolts for the new plug. The operator established an inspection program for checking quick-disconnect plugs and battery terminals for arcing and burning.

b. The quick-disconnect plug manufacturer has published Service Bulletin No. 101 which describes inspection procedures covering field check battery disconnects and receptacles.

c. This information should be brought to the attention of all operators using aircraft equipped with nickel-cadmium batteries and quick-disconnect plugs. *

24-7. AIR-DRIVEN GENERATOR TESTING. There may be confusion as to when emergency ram air turbine (RAT) and air-driven generator (ADG) systems should be functionally tested on aircraft where such systems are installed. In addition to the prescribed periodic maintenance requirements for the RAT or the ADG, these systems should be functionally tested on the aircraft following initial installation or replacement. Some operators of aircraft may be of the opinion that replacement of RATs or ADGs with factory overhauled or repaired units (which were bench tested) need not be functionally tested at the time of installation.

Inspectors should review the maintenance programs associated with these emergency systems to assure that functional tests are accomplished on replacement of RAT and ADG units.

*24-8. MCDONNELL DOUGLAS DC-9 CROSS-TIE RELAY INFORMATION. Information has been received subsequent to the issuance of Maintenance Bulletin 24-8 in Change 14 dated October 6, 1975, that places an overhaul time limitation on the DC-9 cross-tie relay (P/N 914F567-3). The earlier bulletin referred to McDonnell Douglas TWX communications DC-9-COM-32-FC 9-24-20 dated July 18, 1975, and DC-9-COM-31-HGR 9-24-20 dated July 9, 1975, to all DC-9 operators that stated in pertinent part that Douglas and Westinghouse recommended procedures:

> "APPLICABLE TO THE ACTR, BE ACCOMPLISHED WITHIN 3000 FLIGHT HOURS ON RELAYS WHICH HAVE ACCUMULATED OVER 7000 HOURS. THIS PROCEDURE SHOULD BE FOLLOWED ON A REPETITIVE BASIS UNTIL FINAL CORRECTIVE ACTION HAS BEEN INCORPORATED, ETC."

We are now in receipt of a copy of Westinghouse Service News Letter SNL No. 70 dated September 1976 to all DC-9 aircraft operators, Subject: DC-9 Power Relays P/N 914F567-3/-4 Maintenance Requirements, which concludes with the following sentence:

> "Westinghouse has not and does not approve TBO above 7000 hours on either unmodified (P/N 914F567-3) or modified (P/N 914F567-4) power relays."

Principal avionics inspectors should assure that their assigned DC-9 operators' maintenance programs include the limitation described herein.*

24-9. SIKORSKY MODEL S-61 HELICOPTER - NICKEL-CADMIUM BATTERY COVER.

a. An incident occurred where the battery cell cap screw contacted the metal cover, burning a hole in the cover and causing smoke in the cockpit.

(1) Investigation revealed that a special battery cover was necessary due to vibration and that the battery is held in place by clamping the cover to the battery rack. This special battery cover has an extra fiberglass liner in addition to the regular neoprene liner. The purpose of the fiberglass is to provide additional protection to keep the battery cells from contacting the metal cover.

(2) There are no part numbers stencilled or stamped on the covers. The special cover is distinguishable only by four nylon buttons used to fasten the fiberglass to the inside of the cover. Sikorsky S-61 Maintenance Manual does not mention the special battery cover, however, their parts manual refers to a complete battery assembly, P/N 25696. This assembly consists of a Marathon MA-11 ni-cad battery with the special cover. Marathon lists this cover by P/N 25421-2.

b. It is recommended that this information be brought to the attention of all operators using Sikorsky Model S-61 helicopters.

24-10. MCDONNELL DOUGLAS DC-10 AIR DRIVEN GENERATOR (ADG) GROUND OPERATIONAL TEST.

a. In order to obtain relief from the in-flight testing requirement for the DC-10 ADG (ref 24-7) a ground operational test has been developed by McDonnell Douglas and approved by the FAA. This ground test is accomplished by back driving the ADG with a hydraulic motor which is attached by means of an adapter plate and is monitored by an electronic box assembly to maintain visual control of the overall test operation.

b. Principal avionics inspectors assigned to DC-10 operators using the ADG ground test in lieu of in-flight deployment should assure that the required test equipment is available and the procedural steps in Chapter 24-25-01 of the DC-10 maintenance manual are complied with.

*24-11. KLIXON TOGGLE-TYPE CIRCUIT BREAKERS, P/N C6363-1-10.

a. An operator of a Convair 580 aircraft experienced an electrical fire in flight when one of the reading light assemblies shorted. The circuit is protected by a Klixon toggle-type breaker, Part Number C6363-1-10, which failed to open. Approximately 4 feet of wiring was charred and burned before the breaker contacts finally melted, opening the circuit. *

b. The failed breaker was examined, and it is thought that the contacts were welded, thereby preventing proper operation of the breaker. A reading light switch breaker was removed from another aircraft and examined. The unit showed no outward sign of overheat or damage. The switch action was crisp and positive; however, when the case was opened, the contacts were badly pitted and contaminated with carbon.

c. The operator has initiated a fleet campaign to replace the reading light toggle-type breakers in all of their CV-580 aircraft. There are four breakers per aircraft. A check procedure is being developed to check these breakers every 2,500 hours.

d. Since this condition could exist on other aircraft utilizing the toggle-type breakers, all affected operators should be encouraged to sample some of these units, and establish a regular inspection procedure for these circuit breakers.

24-12. AIRCRAFT CIRCUIT BREAKER PANEL MARKING.

a. Label strips identifying circuit breakers in aircraft, such as the Convair 240/340/440 and 580, on some occasions, have slipped in the holding rack and their position no longer correctly identifies their related circuit breakers. In addition, labels identifying those circuit breakers most often used have become unreadable through continued use. These conditions can result in a safety of flight problem if the proper circuit breaker cannot be readily identified when required.

b. It is recommended that principal avionics inspectors assure that their assigned operator's inspection program includes periodic inspections which determine the condition of circuit breaker identification.

* 24-13. MISCELLANEOUS EQUIPMENT REQUIREMENTS: A MEANS FOR INDICATING ADEQUACY OF POWER BEING SUPPLIED TO REQUIRED FLIGHT INSTRUMENTS - SECTION 121.313.

a. Inquiries received from district offices and industry have concerned the application of Section 121.313(c) of the Federal Aviation Regulations (FARs) to require individual power warning indicators for each required flight instrument on all Convair Model 580 aircraft.

b. The correct interpretation of FAR 121.313(c) can be best understood by a review of old Civil Air Regulation (CAR) 40.175(c). FAR 121.313(c) has not changed since the recodification of CAR 40 to FAR 121, and the recodification was not intended to alter regulatory substance. Unlike FAR 121.313(a), CAR 40.175(c) did not reference the type certification requirements of CAR 4b. CAR 40.175(c) was the same in substance as the alternative requirement of FAR 121.313(c), provided after the word "or." *

* c. The interpretive (nonregulatory) material of old Civil Air Manual (CAM), paragraph 40.175-1 advised that aircraft having a power supply and distribution system which meet a set of CAR 4b requirements; i.e., the CAR 4b equivalents to the FAR 25 cited in FAR 121.313(c), were deemed to have met the requirements of CAR 40.175(c). Neither CAR 40.175(c) or CAM 40.175-1 required that the CAR 4b requirements cited in CAM 40.175-1, be met as long as the basic less stringent requirements of CAR 40.175(c) were satisfied. Therefore, FAR 121.313(c) must be interpreted in the same manner.

d. Unfortunately, in recodification, the interpretive material (CAM 40.175-1) was placed at the lead of FAR 121.313(c), and the more fundamental requirements of CAR 40.175(c) were appended as an alternative by the use of the word "or." It is understandable that the current regulations might have been mistaken as they were, since the flow is somewhat awkward. Nevertheless, it is quite clear that there never has been a requirement that all aircraft comply with FAR 25.1331; it is merely an option for older aircraft like the Convair 580.

e. Therefore, the operable subparagraph of FAR 121.313 is (d) not (c). Subparagraph (d) exists to specifically address a means to indicate the adequacy of the power being supplied to required flight instruments; and, it does not require individual indicators for each instrument.

f. The above interpretations of FAR 121.313 have been reviewed and agreed to by the Federal Aviation Administation's Office of the Chief Counsel. *

APPENDIX 5. EQUIPMENT AND FURNISHINGS (ATA CODE 2500)

25-1. MALFUNCTIONS OF EVACUATION SLIDES IN AIR CARRIER AIRCRAFT. During simulated emergency evacuation tests that were conducted for approval of increased passenger seat configurations,difficulties occurred that could have a definite effect on the safety of the passengers and crew if the same conditions occurred during an actual emergency condition. For example, in one case when the forward slide was attached to the wedges on the floor, the straps were hooked up in a crossed manner due to improper packing of the slide. Before the situation could be corrected passengers started using the slide, and resultantly, a hole was torn into the slide by a passenger's shoe. Another passenger also became entangled after a leg went through the torn slide. Obviously, the rate of egress was slowed up and injury could have been the result. In another case, the slide was attached upside down due to poor exit lighting and the inability to see how to match the color coded slide fasteners with the wedge fittings of the doorway frame. Further, a passenger was injured where two lugs on a slide broke and the passenger fell to the hangar floor. Investigation revealed that the lugs were not manufactured in accordance with TSO C69. Finally, a slide failed to inflate because the folds were wrapped with four loops of twine instead of three.

In the past, emergency evacuation tests have been conducted and numerous discrepancies were noted which were primarily caused by design and/or installation deficiencies. The following is a brief summary of these discrepancies:

a. Attach bar not secured, slide rotated, dropping the evacuee to the ground.

b. Slide strap was not attached to the aircraft.

c. Rear slide failed to inflate because the release cable became detached from the valve (2 cases).

d. Slide support straps were crossed when installed.

e. Difficulty experienced in positioning the escape bar due to interference of the inspection tag.

f. Storage bin doors dropped to the full extended position restricting movement of evacuee's (No retaining hooks installed).

g. Rear inflatable slide not properly positioned, resulting in entanglement of the shrouds.

h. Excessive time to inflate slides.

i. Hose from panel dropped in such a manner that it appears to be a rope. Evacuees attempted to use it as a guide, causing the storage panel to fall in the path of other evacuees.

j. Slide caught in storage clip which could tear slide.

k. Slide attachment bar was painted on both ends, causing confusion relative to correct attachment position.

l. Storage door failed to open even though the release bar was operated in accordance with approved procedures.

m. Valve malfunctioned and slides could not be inflated. Inspection of valves in parts supply revealed that other valves were also defective.

n. Inflation handle fell out of reach outside of the aircraft when the slide was deployed.

o. Rear slide could not be pulled from the storage bin as a single unit. Additional time was required to pull the remaining folds from the rack in order to install the retaining bar.

p. Quick disconnect CO_2 hose fitting released when slight air pressure was applied.

q. Slide dropped from the container with attach straps entangled.

r. Pins on the activating slide storage door bar slipped out on forward slide, and the door had to be manually opened.

s. Rear slide inflated by passenger before the bar was installed, and the slide fell out, overturned, and swung toward the tail of the aircraft.

t. Rear slide twisted out of position when it was inflated, and attempts to straighten were unsuccessful. The slide was deflated and used as a noninflatable slide.

u. Both slides failed to inflate fully due to a low charge in the bottle.

v. Slide folds wrapped with four loops of twine rather than three.

While these discrepancies are not classified relative to whether they resulted from maintenance, design, or training, they are items which can definitely affect the safety of the passengers and crewmembers. Obviously, extreme confusion will exist during an emergency condition, and any malfunction of such equipment can only result in extreme danger and/or loss of life. In this respect, increasing the number of passengers increases the need for a higher degree of reliability in safety equipment in order to safely deplane the passengers without delay during a survivable accident. Therefore, every effort should be made to assure that all safety equipment is inspected at intervals of sufficient frequency to ascertain that it will, in fact, operate satisfactorily. The above-listed discrepancies suggest that the frequency and quality of inspections are not accomplishing the necessary degree of reliability that is expected in the operation of this type of equipment. In this respect, we strongly recommend that an operational inspection of the slides be performed at each periodic inspection period with the slide installed in the aircraft in its normal position. The operation should be conducted in the same manner as it would be during an emergency evacuation.

In view of the seriousness of this matter, we recommend that assigned inspectors bring this information to the attention of all operators for action as necessary. The operators' maintenance and inspection programs should be evaluated to determine that they are adequate to maintain the evacuation slides. Assigned inspectors should investigate all known malfunctions and failures and effect corrective action as necessary. All malfunctions and failures should be followed up until satisfactory correction is accomplished.

25-2. MAINTENANCE OF PASSENGER SEATS. An accident investigation report revealed that, as a result of impact, some seats on both sides of the cabin broke from the floor, while others remained intact.

Information was received of maintenance personnel using extreme forces to align and install passenger seats. Inspection of seats removed from some aircraft revealed severe impact marks and considerable distortion of seats and attach fittings. Mishandling when installing seats, such as pounding and bending, will result in deterioration of strength and possible failure when seats are subjected to unusual loading.

Preservation of life and protection from injury demand a high standard of safety which can only be realized through good, sound maintenance practices. To afford passengers a high standard of safety, seat installations should be inspected at frequent intervals. During this inspection, particular attention should be given to the following items:

a. Attach fittings, especially the locking devices.

b. Track and/or receptacle, for wear, dirt and debris with replacement of defective and worn parts.

c. Seat attachment fittings, proper mating to the track or receptacle.

d. Seat structures, for warpage, bends and distortion.

e. Floor and associated attachments, for deterioration.

When seats are used in aircraft that require frequent changes of seat configuration, an inspection should be accomplished that would encompass the above items at installation. During seat renovation, or overhaul periods, a detailed inspection should be accomplished by the use of acceptable nondestructive methods.

Continued surveillance of the quality of passenger seat maintenance should be accomplished during the inspector's normal activities. Seat structural failures should be given prompt attention and corrective action initiated as necessary.

25-3. MAINTENANCE OF AIRCRAFT BUFFET EQUIPMENT, BAGGAGE RETAINERS AND MOVABLE EQUIPMENT LOCATED IN THE PASSENGER COMPARTMENT. During flight, a Boeing 707 aircraft encountered severe hail and turbulence which caused the outer windshield panel and radome to separate from the aircraft. An unscheduled landing was made. The aircraft was stopped on the runway and the passengers were evacuated. When the evacuation began, the right rear exit was found blocked in the buffet area. Apparently, a latch on the buffet became unfastened and allowed the buffet equipment to slide out and block the exit.

In another case, the landing resulted in an accident, and it was found that after impact the aisles were cluttered with coffee containers, trash bins, and food trays. In addition, the carry-on baggage located in the forward cabin area was thrown out of the bins and partially obstructed the forward cabin exit. Fire became intense in the right wing and was spreading toward the cabin area. Before the passengers could be deplaned, it was necessary to remove this equipment from the aisles. Valuable time was lost which subjected the passengers to extreme danger. Fire, smoke, and explosions are deadly and swift and intolerant of delay.

Any restrictions to a rapid egress from an aircraft during an accident can result in serious injury and loss of life. Loose equipment can be extremely hazardous during an accident and may become a missile during turbulent weather. While there is no evidence of improper maintenance in the cases cited, information received of other incidents indicates that the locking devices on buffet equipment, serving carts, and other movable equipment are not always properly maintained. For example, a buffet drawer with a faulty lock was wedged with a piece of paper to keep it from sliding out of the buffet. Later this same drawer was removed from the buffet and placed on the lounge floor for the duration of the flight.

In view of the seriousness of these incidents we recommend that:

a. This information be furnished to all operators for action as necessary.

b. The operator's maintenance and inspection programs be reviewed to assure that they are adequate to maintain the serviceability of this equipment.

c. All malfunctions and failures be thoroughly investigated and followup action continued until correction is accomplished.

25-4. MAINTENANCE OF LIFE RAFTS IN AIR CARRIER AIRCRAFT. During simulated ditching demonstrations that were conducted for approval of increased passenger seat configurations, malfunctions occurred that a have a definite bearing on safety for the passengers and crewmembers. For example, in several cases the life rafts failed to inflate due to improper assembly of the discharge heads on the inflation bottles. In another case, three life rafts ruptured during inflation rendering them unseaworthy. Two life rafts failed to inflate due to empty air bottles.

a. Several other discrepancies were noted during these tests. The following are some examples in which improper maintenance is the primary cause:

(1) Excessive pull required to discharge air bottle (above limit specified in manufacturer's technical standard order).

(2) Life raft discharge valve would not set in closed position due to foreign matter under valve seat caused by defective phenolic resin interior coating of air bottle.

(3) Failure of release cables due to wear as a result of chafing where cables are routed over pulleys.

(4) Hydrostatic tests of air bottles had not been conducted in accordance with the provisions of CFR 49, subtitle B, Chapter 1, Part 173.

(5) Deterioration of the fabric in the folds when the rafts are stored for a long time.

(6) Excessive life raft inflation time due to improper packing.

(7) Emergency survival equipment missing from rafts.

(8) Raft emergency light batteries corroded and discharged.

(9) Raft mooring lines missing, paddles with handles that did not fit, and canopy poles which would not fit sockets of the rafts.

b. The importance of proper inspection and maintenance of emergency equipment cannot be overemphasized. Adjustments in parts of replacement intervals, improved testing procedures, comprehensive maintenance manual instructions, improved quality control procedures and adherence to manufacturer's recommendations will eliminate some of the failures. In other cases, an operational check of the rafts performed at intervals of sufficient frequency would disclose discrepancies that would otherwise go unobserved. This operation should be conducted with the life rafts as installed in the aircraft.

c. In view of the seriousness of these incidents, we recommend that:

(1) Inspectors bring this information to the attention of their assigned operators and repair agencies for action as necessary.

(2) Special consideration should be given to items listed as "On Condition" to determine that procedures for inspection, measurement, test, or other means are adequate to maintain continued airworthiness.

(3) The operator's maintenance and inspection programs be reviewed to assure that they are adequate to maintain the life rafts.

(4) Assigned inspectors should investigate important malfunctions and failures and provide followup action until satisfactory corrective action is accomplished.

25-5. MAINTENANCE OF CLASS D CARGO AND BAGGAGE COMPARTMENT LINERS. Damage of class D compartment liners during loading operations may go unnoticed for long periods of time. Since the fire protection integrity of class D cargo and baggage compartments is dependent upon the condition of the fire-resistant liners, it is imperative that the liners be properly maintained.

When a liner is punctured, the compartment airflow may no longer be low enough to suffocate and therefore isolate a fire. The basic concept of ventilation control is lost whenever the liner is punctured, and fire, once started, could progress beyond safe limits. The resultant potential danger makes clear the need for exercising utmost caution during loading operations to prevent unnecessary liner damage and the prompt reporting to maintenance for corrective action whenever damage is observed by cargo-handling personnel.

In view of the seriousness of this matter, we recommend that assigned inspectors review the carriers' manuals to ascertain that adequate instructions are contained for the prompt reporting and repair of damaged cargo and baggage compartment liners. In addition, continued surveillance of the quality of cargo compartment maintenance should be accomplished during the inspector's normal activities and corrective action initiated as necessary.

25-6. EMERGENCY FLOTATION DEVICES - PASSENGER SEAT CUSHIONS. Tests have verified that changing the location of the straps on replacement seat cushion covers can inadvertently destroy the effectiveness of the cushions for use as emergency flotation devices. In one instance, an air carrier modified the seat cushion upholstery by securing Velcro fasteners in such a manner that the covering came off the cushion during flotation testing. In case of an emergency, this would have left passengers without a method for holding onto the bouyant cushions.

During a SWAP inspection, it was noted that there were no retaining straps installed on approximately 300 seat cushion covers. This is contrary to TSO C-72a, paragraph 4.1.2., Miscellandous Design Features, which states: "The device shall be adaptable for children as well as adults. They shall have features which enable the users to retain them when jumping into water from a height of at least 5 feet. Attachment straps shall not pass between the user's legs for retention or restrict breathing or blood circulation." The operator returned the seat cushion covers to the manufacturer and the retaining straps were installed.

It is recommended that operators be made aware of these occurrences and that emergency flotation equipment be checked for compliance with TSO C-72a and FAR 121.340.

25-7. VENDOR-MANUFACTURED CARGO CONTAINERS DESIGNED TO BE CARRIED ON PASSENGER SEATS. Some of these containers have been found to be fabricated of flammable material and improperly secured.

a. Specific standards do not exist which prohibit the use of flammable material in the manufacture of such containers. In the absence of a precise standard, inspectors should encourage and urge their assigned carriers to abide by paragraph (b)(6) of FAR 121.285 which states that the bins must be fully enclosed and made of material that is at least flame resistant.

b. Paragraph (4) of FAR 121.285 provides that the bins must be attached to the seat tracks or to the floor structure of the airplane. In the case of the containers (or bins) that are the subject of this maintenance bulletin, they are not attached to the seat tracks or the floor structure of the airplane but are usually secured to the seatbelt.

c. Some of the containers in question have been found to be improperly secured to the seat. Poor restraining straps or improper attachments which do not restrict the cargo from shifting constitute a flight safety hazard. FAR 121.285(c) provides regulatory material regarding the proper tiedown of bins of the type in question.

d. It is recommended that all inspectors monitor their assigned carriers, enforce proper tiedown procedures, and discourage the use of flammable material in the fabrication and use of seat designed cargo containers.

25-8. EMERGENCY EVACUATION SLIDE LIGHTING. Several instances have been reported wherein the self-contained slide lighting system failed to operate. These malfunctions are attributed to broken and corroded electrical connections. In another instance, functional tests performed on a fleet of Douglas Model DC-9 aircraft disclosed a 50% failure rate in the emergency evacuation slide lighting system. Investigation revealed that the ball switch assembly, P/N 68748-1, utilized in International Flatables Company systems, is susceptible to moisture entrapment resulting in corrosion and switch malfunction.

Inasmuch as these are recurring reports, the necessity for proper operation of emergency evacuation provisions cannot be overemphasized. It is recommended that:

a. Assigned inspectors bring this information to the attention of all operators and repair agencies for action as necessary.

b. The operator's maintenance and inspection practices and procedures be reviewed to assure that they are adequate to maintain the continued serviceability and immediate readiness of this equipment.

25-9. FLIGHT ATTENDANT SEAT AUTOMATIC RETRACTION. Reports indicate that the automatic retraction mechanism on some flight attendant seats have been found inoperative. In some cases, they have even been found taped to the bulkhead to keep them in the retracted (stowed) position. The purpose of the automatic retraction mechanism is to retract the seat bottom (fold it up) when it is unoccupied so that it is out of the way.

An inoperative retraction mechanism constitutes a serious safety hazard in that the seat, when not retracted, can block access to doors and to emergency equipment. Inspectors should check for proper operation of the automatic retraction mechanism on flight attendant seats as part of any regular or special inspection of aircraft interiors.

25-10. AIRCRAFT PASSENGER SEAT BELTS. According to information received from the Civil Aeronautics Board, a prime injury-producing factor in many survivable accidents and incidents has been inadequate passenger tiedown. A survey found that passenger belts, in many cases, would not properly secure small adults or children because the belts could not be adjusted sufficiently. The adjustment capability of the belt assemblies was limited because one or both of the belt straps was too long for the seat width. This condition existed on both the thread-through type and the metal-to-metal buckle type even though all the belts were manufactured in accordance with TSO C-22e.

Seat belts are manufactured in various lengths in order to fit passenger seats of different widths. Since most approved belts can be installed on any approved seat, it is responsibility of the operator to ensure that the safety belt assemblies will properly secure all occupants.

In other instances, passengers have been injured because their seat belts became unfastened. The primary cause can be attributed to weak buckle springs, worn buckle serrations, and worn or deteriorated belt webbing. In order to determine whether any appreciable problem existed relative to seat belts, a nationwide survey was conducted. Approximately 20,000 seat belts were examined and 4% of these were found to be slipping beyond the allowable limits.

The webbing of safety belts is subject to deterioration due to constant use, cleaning, and aging. Repeated clamping action of the buckle serrations also causes a reduction in webbing strength and fraying occurs after long periods of use. Such belts are likely to be unairworthy and obviously should be replaced since they may no longer hold the minimum required tensile load.

In an effort to reduce and/or eliminate faulty seat belts, we recommend that the owner/operator conduct frequent inspections of the seat belts and replace all belts found to be slipping beyond the allowable limit.

During the FAA maintenance inspector's normal duties involving spot, ramp, and en route inspections, he should:

a. Visually inspect the attachment and safety of both crew and passenger seat belts.

b. Physically check the seat belt mooring for security at the seat attach points.

c. Inspect seat belts for condition and determine whether those using the serrated cam-type buckles have more than one inch of slippage.

25-11. BOEING MODEL 747 AIRCRAFT - CONVERSION OF VACANT LIFE RAFT COMPARTMENTS FOR STOWAGE. Operators have expressed a desire to use vacant life raft stowage compartments for soft article stowage.

a. The Boeing Company issued Service Bulletin 747-25-2186, Life Raft Compartment Balance Mechanism Adjustment. Compliance with this bulletin reduces the force required to open vacant life raft stowage compartments.

b. To use the vacant life raft compartments for stowage each operator must provide suitable stowage compartment provisions to assure compliance with FAR 25.857. These provisions are not a part of the Boeing Service Bulletin.

c. Life raft stowage compartments in all Boeing 747 production aircraft have not been certificated as Class D stowage compartments except when a master change has been purchased from the Boeing Company. This master change provides special Class D stowage containers for installation in vacant life raft compartments.

25-12. BOEING MODEL 747 AIRCRAFT - MAIN CABIN CEILING PANEL SECURITY. An incident occurred where several improperly secured panels in the cabin fell. All ceiling panels must be securely latched to assure passenger safety when encountering turbulence or abnormal landings.

a. Two types of latches are used to retain ceiling panels: a screwdriver operated quarter-turn latch (propeller type) and an automatic overcenter-snap latch (mousetrap type).

(1) The propeller type latches are used in all gaps between adjacent panels in Cabin Zones C, D, and E, the longitudinal gaps in Zone B, and along the sides of the forward center panel in Zone A. Locations of the propeller type latches are identified by screwdriver slots in the gaps between panels. These latches are secured when the screwdriver slots are oriented across the gaps.

(2) The mousetrap type latches are not visible from the cabin, but they are used on the remaining panels in Zone A, along the transverse edges in Zone B, and to support the speaker panels. When the panels are pressed in place, the latches automatically snap closed with an audible report. Proper fairing of the panels indicates latch engagement.

b. This information, along with a complete description of the panels including removal/installation procedures, is contained in the Boeing Model 747 aircraft maintenance manual, subject 25-22-01.

25-13. McDONNELL-DOUGLAS DC-8 AIRCRAFT - LIFE RAFT COMPARTMENT DOORS. During ramp checks and en route inspections on DC-8 aircraft, there were several instances where the life raft compartment doors were binding and could not be opened. This condition existed on 14 of the 32 total doors inspected on four different aircraft.

The life raft compartments are mounted over the hat rack. In five cases, the binding was so severe the life raft compartments had to be disassembled in order to correct the discrepancy. In other cases, adjustments to the compartment side panels and latching mechanisms were necessary to effect proper operation. In a few cases, improper installation of the life raft compartment top hinges resulted in difficulties when operating the door release latch.

Operators should be encouraged to review their maintenance programs for adequate procedures to ensure proper operation of life raft compartment doors on convertible type DC-8 aircraft.

25-14. LOCKHEED L-188 AIRCRAFT - CONTROL COLUMN/SEAT INTERFERENCE. An inspection of the Captain's cockpit seat revealed it had overrun the forward stop block. This occurred because the lateral limit stops for the seat had become misaligned.

a. A mechanical stop is provided to limit the forward travel of the seat when latched in the intermediate or outboard positions. If this stop is damaged or misaligned, it is possible for the seat to latch in a forward position and not be fully inboard. As a result, the seat will interfere with the aft movement of the control column due to misalignment between the column and the cutout in the seat.

b. In view of the danger that exists when this type of malfunction occurs, it is suggested that the operators of L-188 aircraft inspect the stops periodically for proper alignment and accomplish repairs if necessary. Flight crews should move both pilot seats fully inboard and center them on the control column before moving forward into the selected flight position. This precaution should be taken not only when checking the elevator control for full travel before takeoff, but any time either pilot slides his seat back from the active "in-flight" position.

c. This information should be disseminated by all inspectors assigned to L-188 aircraft operators.

25-15. EMERGENCY EVACUATION SLIDES. A Convair 990 operator, using Pacific Inflatables slides, P/Ns 4136800-114 and 4177800-114, reported several deployment bladder failures (P/Ns 102 and 103). Investigation revealed that the material separated in the "heat sealed" neck attach point above the inflation cartridge. This allowed all inflation air to escape, and the evacuation slide would not eject and inflate as required by the FARs. A replacement bladder, incorporating adhesive sealing rather than heat sealing, is available from the manufacturer. (These slides are also used on the CV-880 aircraft.)

Several instances have been reported wherein new emergency evacuation slides have failed to deploy properly. These malfunctions all occurred during the first deployment after being packed by the slide manufacturer. During an actual emergency evacuation on a CV 240 and 600 (240D) aircraft, an inflatable slide was punctured by the lower inboard corner of the opened rear service door. The emergency resulted from an inadvertent retraction of the nose landing gear, placing the aircraft in a tail-high position.

The forward angle of the extended slide places it very close to the lower inboard corner of the open door. The rear door, when fully opened, is only 90 degrees with respect to the fuselage. The puncture resulted from the movement of the slide, striking the sharp corner of the door. The manufacturer published Service Bulletin 600 (240D) No. 52-1, Rework of Rear Service Door to Prevent Emergency Slide Damage. This bulletin describes the rework to provide a rounded corner on the door which will minimize the possibility of slide damage.

It is recommended that operators be advised of these occurrences and encouraged to report any such malfunctions to their assigned maintenance inspectors.

25-16. DEFECTIVE INFLATION SYSTEM FOR AIRCRUISER'S EMERGENCY EVACUATION SLIDES. An FAA inspector reported that the flight attendants could not actuate the lanyard used to trigger the inflation bottles for an emergency evacuation slide located in the rear cabin of a DC-8 aircraft.

a. The incident occurred during an actual evacuation of a DC-8 aircraft as a result of a landing gear fire.

b. Investigation revealed that the nicopress sleeve on the inflation system pull cable entered and adhered permanently to the cable's plastic guard. The captain of the aircraft had to use his force to release the emergency evacuation slide inflation cable system, because it was beyond the female cabin attendant's strength.

c. Parts affected are Aircruiser's evacuation slide inflation cable guide assemblies. The nicopress sleeve which retains the pull tab cable loop enters the plastic tube cable guide and adheres to the inside of the plastic tube. This condition requires abnormal force in order to free the cable so that it can perform its function of triggering the inflation bottle system.

d. It is recommended that all operators utilizing the subject equipment be made aware of this occurrence and that their emergency evacuation slides be checked for these or similar conditions.

25-17. BOEING 747 AIRCRAFT - ESCAPE SLIDE INFLATION HOSE COUPLING CONNECTOR INSPECTION. The Boeing Company issued Service Bulletin 747-25-2193. The following is quoted from the service bulletin for your information and action as deemed appropriate.

a. One customer experienced a powered opening of No. 1 main entry door when the door was inadvertently opened from the inside with the mode selector in "AUTO". When the door powered open, the escape slide deployed from the packboard and the gas generator fired normally. However, when the gas generator fired, the inflation line hose coupling separated allowing the generated gas to escape to ambient and consequently the slide did not inflate. Inspection disclosed the latching mechanism to be worn and bent resulting in the latching handle giving full lock indication but leaving the packboard insufficiently secured.

b. Subsequent inspection of the remaining door slides on this airplane and inspection of entry doors 1, 2, 4, and 5 on three other aircraft revealed seven other latches that exhibited similar patterns of wear or damage. Excessive lug wear and bent handles can result from attempt to engage coupling halves prior to complete insertion and alignment of the escape slide coupling into the door mounted coupling half. Door No. 3 is a different configuration and is not exposed to this type of failure.

c. To ensure proper engagement of inflation hose coupling halves, it is recommended that a one-time visual inspection of the inflation hose coupling connection on entry doors No. 1, 2, 4, and 5 be accomplished.

d. This inspection involves removing the door lower lining assembly and inspecting the coupling connection using a mirror. If the lugs on the lug ring are fully engaged, the coupling installation is satisfactory. If partial engagement or no engagement exists

of either lug, the coupling should be released and relatched. If undue force is required or attempts to relatch are unsuccessful, realignment of coupling halves or replacement of damaged components may be required.

e. In addition to accomplishment of the service bulletin it is recommended that periodic inspections of the escape slide inflation hose coupling connectors be included in the operator's maintenance program.

25-18. BOEING MODEL 747 AIRCRAFT - ESCAPE SLIDE GAS GENERATOR SECURITY. During an actual emergency evacuation, a door mounted escape slide failed to inflate. Investigation revealed that the gas generator (bottle) had become dislodged from its mounting and failed to release its charge.

a. The door mounted gas generator is held in the mounting bracket by clamps of the overcenter type action with an additional spring loaded latch to assure that the clamps will remain in the locked position. This incident revealed that the spring loaded latch was in the locked position; however, the retaining clamp was unlocked.

b. Assigned inspectors should assure that the installation instructions and inspection prescribed by the Boeing Model 747 aircraft maintenance manual are contained in the operator's maintenance and inspection program. In addition, it is recommended that the gas generator security be checked at regular intervals.

25-19. BOEING MODEL 747 AIRCRAFT - MAIN ENTRY DOOR GIRT BAR SUPPORT BRACKETS. Cracks were found in the support brackets that attach the escape slide girt bar mechanism to the lower gate of each main entry door. During an evacuation, the failure of one slide to deploy properly was attributed to a broken bracket.

a. The bracket strength is more than adequate for normal and emergency operation. The cracks are the results of overloads due to jammed conditions, improper operation, improper girt bar installation, or foreign objects lodged under the girt bar.

b. The Boeing Company issued B-747 Maintenance Tips, Nos. 25-6 and 52-5, to alert maintenance personnel of these problems and how they can be avoided. In addition, the Boeing Company published a letter to all customers with information for the nontechnical personnel who operate the doors in their routine duties. This letter outlines the following procedures:

(1) Never move the mode selector lever unless the door is closed and fully latched. If the door is unlatched in the AUTO mode, it must be relatched in the AUTO mode prior to moving the mode selector lever. If the door is ever partially opened in the AUTO mode and reclosed before the emergency system is activated, the girt bar should be inspected and restowed if necessary.

(2) Make sure that the sill and the floor are free of debris for at least 18 inches from the sill.

(3) A closed door should always be fully latched. From the inside, firm down pressure on the door handle will ensure it is fully latched. When latching the door from the outside, the handles should be in their recess. Proper stowage of the handles is accomplished by pushing the handles into the recess until the small "PUSH" tab at the top pops out flush with the door skin.

(4) Do not force the mode selector lever. Operation of the mode selector lever should be smooth and should have positive detent feel. If movement is difficult or feels spongy, something is wrong, and the girt bar should be checked.

c. Most of these items are covered in existing maintenance and training literature and should be common knowledge among airline personnel. However, it is recommended that inspectors bring this to the attention of their assigned operators and emphasize the fact that if the main entry doors are not maintained or operated properly, parts can be bent or broken which could result in the inability to properly deploy an escape slide during emergency conditions.

*25-20. AIRCRAFT LAVATORY FIRES. As a result of several recent fires in aircraft lavatories, a survey was conducted to determine the effectiveness of lavatory maintenance and servicing and the capability of lavatory receptacles to contain a fire as designed.

A total of 672 reports were submitted by field personnel as a result of this survey. These reports concerned all air carriers and all types of aircraft. 228 discrepancies were noted in these reports. The discrepancies included cases of paper, sanitary napkins, and towels being left on the receptacle floors in container chutes after servicing, bent and warped doors, broken latches and hinges, illegible and missing placards, missing or loose sealing materials, and water heater wiring chafing on sink stopper assemblies.

Discrepancies of this nature could develop into serious safety problems. All of the foregoing can easily be corrected and should be at the earliest possible time. Therefore, all Principal Maintenance Inspectors are requested to evaluate the operator's maintenance program and determine that adequate emphasis is placed on the servicing and maintenance of lavatories. Corrective action should be taken in all cases where instructions and inspection frequencies are not sufficient to properly service and maintain this equipment. Inspectors conducting enroute, ramp, and spot inspections should increase surveillance of lavatory equipment and take action as required.

*25-21. FIRE HAZARD - PASSENGER'S READING LIGHT SYSTEM WIRING DISCREPANCY. An operator of a Convair Model 880 aircraft had encountered a condition during flight where a passenger seat reading light socket became dislodged and made electrical contact with the oxygen door trigger spring. The light wiring had previously been reversed inadvertently so the light socket shell was at 28 volt potential in lieu of ground, permitting an arc when the shell contacted items at ground potential.

a. It is theorized the dislodged light shell contacted the oxygen door trigger spring causing the spring to become a heated element. The hot spring burned through the passenger service unit, the oxygen supply hose, and the stored oxygen mask and tubing. When the spring eventually separated, it allowed the mask to drop, which was the first indication of the problem.

b. The operator issued a one-time fleet campaign to ensure the same condition did not exist on other makes and models of aircraft, and to further eliminate future problems of this type by color coding power wires and to assure fixture retention.

c. Since it has been determined that this fire hazard could exist on other types of aircraft, all operators of large aircraft should be encouraged to conduct a one-time inspection to assure proper wiring and retention of reading light assemblies. In addition, it is recommended that this area be inspected at regular intervals. *

* 25-22. B-707 INFLIGHT FIRE IN GALLEY AREA. Recently an operator experienced an inflight fire in the galley area of a B-707. The flight crew removed power from the galley and extinguishers were used to put out the fire.

Investigation showed that heat and fire damage was confined to the coffeemaker wiring, solenoid, terminal strip, and upper internal insulation blanket.

Paper drinking cups provided the fuel for the fire. They had fallen from a cup dispenser, lodged behind the coffemaker and were in close proximity to the water heating element which provided the ignition.

The paper cup dispenser in question was located adjacent to the aft attachment of the coffemaker. Servicing is normally accomplished by inserting new paper cups into the bottom opening of the dispenser and pushing them up until the tube dispenser is full.

In this particular case the top of the dispenser apparently was not secured, cups were forced out through the top and then fell and lodged next to the coffemaker water heater heating element.

The operator concerned is issuing a modification order to install a riveted sheet metal cover over the top of the cup dispenser to eliminate overfilling and prevent future incidents of this type. Principal maintenance inspectors should ascertain that a similar potentially hazardous condition does not exist on their assigned operators' fleets.

25-23. AIRCRAFT CABIN STORAGE CONTAINERS. Certain aircraft have storage containers under the seats and in other locations within the cabin. Inspection of an inservice aircraft revealed that the containers located under or between the seats for storage of pillows and blankets are being used in some cases for disposal of waste paper and other waste material. Since this condition may present a potential fire hazard, it is recommended that all operators having storage containers in their aircraft periodically inspect such containers for waste material and proper placarding. PMI's should determine that their assigned operator has a program to insure timely and repetitive inspections of storage containers and compartments for unwanted waste materials. *

25-24. CHADWICK MODEL C-75 HELICOPTER CARGO RACK INSTALLATION, STC SH133WE. An operator of a helicopter lost a C-75 cargo rack during flight. Inspection of the helicopter following the rack loss revealed the front support beam keyholes to be in their original condition. The keyhole condition strongly indicates the front lock lugs were not properly latched per the manufacturer's instructions.

The following actions should preclude a recurrence of this type incident:

a. Operators of helicopters using Chadwick Model C-75 cargo racks should be requested to check their racks for security by inspection and pulling on the racks at the attach points.

b. Installation instructions for the C-75 cargo rack should be revised to include a visual and physical inspection to assure that the lock lugs are securely in place following each installation.

The manufacturer is developing a device to eliminate the possibility of inserting the ball-lock pins without the locking lugs being properly latched.

* 25-25. DC-9 WEBER SEATS. During the investigation of a recent DC-9 accident, it was determined that several of the Weber seat pans exhibited looseness in the front and rear pan-to-seat frame joints as a result of elongation and cracking of the fastener holes. In addition, the number of fasteners (approx. five) does not appear to be adequate. The manufacturer of the seats is aware of this problem and is investigating possible changes to increase seat integrity.

In the interim, it is suggested that principal maintenance inspectors provide this information to operators using this type equipment and determine that adequate inspections and repairs are being made.

25-26. B-747 OFF-WING ESCAPE SLIDES. During a recent emergency evacuation of a B-747-131 aircraft, the 3R, off-wing slide failed to deploy. Investigation revealed that the latch release thruster fired but did not actuate the latch cable to unlock the fairing compartment door that contains the off-wing slide.

Further investigation by the thruster manufacturer, OEA, Inc. revealed the following:

a. The door release thruster, P/N 217440 had a steel shear pin installed in the thruster piston assembly. The OEA, Inc. overhaul manual specifies use of a copper shear pin, P/N 2174105. *

b. The aft door opening thruster, firing pin mechanism, P/N 2174223 was found with excessive rust deposits in and around the firing pin and release mechanism which prevented the unit from functioning.

It is recommended that principal inspectors provide this information to B-747 operators and that appropriate inspections be made for correct shear pin installation and for integrity of the firing pin mechanism.

*25-27. AIRCRAFT GALLEY ELECTRICAL APPLIANCES.
Service Difficulty Reports (SDRs) show that the number of reportable in-flight fire occurrences associated with galley electrical systems is continually increasing. In most instances the smoke, charred wire insulation or actual fire has been attributed to defective appliances such as coffee makers, ovens, hot plates, and their associated switches, controls, plugs, or connectors. Although such appliances may not be considered as airworthiness items, failures of this equipment which can create unsafe conditions and cause actual fires warrant continued attention by maintenance personnel.

To reduce hazards of this nature, it is recommended that principal inspectors review their assigned operators' maintenance and inspection programs to assure that adequate emphasis is placed on the servicing and maintenance of galley appliances and its associated power source circuitry.

25-28. B-747 OFF-WING ESCAPE SLIDE THRUSTER IGNITION CABLE.
A B-747 operator has reported finding seized or binding thruster ignition cable assemblies causing number three cabin door emergency power assist to malfunction. This may have been the possible cause of nondeployment of an off-wing slide during an emergency evacuation.

Galvanic corrosion was found in the coupling nut area of the thruster ignition cable, P/N 189-242.

The operator is performing a fleet campaign inspection, and of 26 aircraft inspected, five have been found with this corrosion. The five aircraft have approximately 16,000 hours time in service. The Boeing Company has been advised of this condition.

It is recommended that principal inspectors advise their assigned carrier of this problem, for whatever action might be necessary. *

25-29. MCDONNELL DOUGLAS MODEL DC-9 AIRCRAFT -- CIRCUIT BREAKER PROTECTION. During takeoff on a DC-9 model aircraft, an incident occurred where certain navigation and communication systems were rendered inoperative. The incident was caused by an unused seatbelt buckle striking and causing damage to the circuit breaker panel mounted behind one of the double, rear-facing, pulldown flight attendants' seats. Historical data indicates that the seatbelt hardware had previously been striking the panel causing damage and denting. The canvas pouch designed to prevent such damage does not provide adequate protection. This condition also exists when the seat is released to the retracted position with the seatbelt buckle unrestrained on the edge of the seat. These deficiencies in protection of the seat/panel combination have been known to exist with the DC-9-11 through -15 series aircraft.

Operators of DC-9 aircraft have implemented various corrective fixes to reduce damage to these panels. One operator designed a plastic cover over the panel which has prevented further damage. Another added additional area to the canvas pouch and another developed a snap-on cover for the panel.

This information should be brought to the attention of all operators using McDonnell Douglas model DC-9 aircraft.

*25-30. EMERGENCY EVACUATION SLIDES. An operator of a Convair Model 600 aircraft equipped with Pacific Inflatables (PICO) slides, TSO-C69, P/N 4156800-14, requested inspection time escalation from twelve months to eighteen months. During the slide inflation demonstration, the deployment bladder used excessive time to inflate and to deploy the slide. Slide inflation time was normal after it deployed.

Investigation of the excessive deployment time revealed that the threaded portion of the CO_2 bottle (the smaller of the two installed bottles), P/N 250, FSN 4220-837-3322, used to inflate the deployment bladder, was shorter than normal. The shorter threads prevented the CO_2 bottle from being fully inserted into the firing mechanism. The tapered bayonet in the discharge mechanism did not penetrate deep enough into the bottle, resulting in a smaller than normal hole. The small hole restricted flow of CO_2 gas into the deployment bladder.

The aforementioned CO_2 bottles were manufactured by Knapp-Monarch Company, which is a part of the Sparkletts organization. The operator compared several CO_2 bottles and determined that the threaded area of the bottles varied, even those with the same date of manufacture. The thread length should be a minimum of 3/8-inch. *

A go-no-go gauge was developed by this operator to assure adequate thread length on the bottle before it is installed.

It is recommended that all operators using aircraft equipped with Pacific Inflatables slides, P/N 4156800-14, be alerted to this condition and to check that the correct CO_2 bottles are used.

*25-31. CABIN ATTENDANT SEAT BELTS. An investigation of cabin attendant seats has disclosed that some seat belt installations do not meet their design function unless the seat belt assembly approved by FAA certification is used.

The approved attendant seat and belt installation ensures that the belt restraint is satisfactory and does not prevent the seat from automatically retracting to its stowed position. The proper stowing of the seat is required to assure that egress is not impeded in the event of an emergency evacuation.

These belts are occasionally replaced with another TSO type belt; however, the belt may not be compatible with the approved seat configuration. Certain belts have a locking mechanism adjusted to lock at a prescribed belt length extension and may be ineffective in restraint of the occupant and/or they may prevent proper seat stowage. Cabin attendant seat belts should conform to FAA approved data to assure restraint and automatic seat stowage. McDonnell Douglas models DC-9, DC-10, and Lockheed model L-1011 aircraft are equipped with cabin attendant seats/belts that stow automatically although they may not be limited solely to these types of aircraft.

It is recommended that inspectors alert all aircraft operators of the cabin attendant seat belt requirements. *

25-32. B-747 UPPER DECK EVACUATION SLIDE. A B-747 operator has reported the occurrence of an inadvertent inflation of the upper deck evacuation slide inside an airplane.

a. The incident occurred while the airplane was undergoing maintenance.

b. Investigation revealed that a mechanic, while attempting to move the slide aft to achieve working space, pushed on the plastic cover which houses the gas generator trigger. The gas generator fired and inflated the slide. The inflating slide caused extensive damage to the airplane interior. Fortunately, personnel in the area were not injured.

c. The operator involved designed and installed a clip angle to provide additional support for the plastic cover, which houses the generator trigger mechanism.

d. It is recommended that all operators of B-747 airplanes equipped with gas generators for inflation of the upper deck escape slide be alerted to this potential problem.

*25-33. AIRCRAFT GALLEY OVENS.

a. There have been reports of flight crewmembers and passengers becoming nauseated by fumes from galley ovens. One case resulted in an unscheduled landing with five crewmembers and two passengers requiring medical attention.

b. An investigation revealed that during cleaning cycles at various catering facilities, ovens were improperly cleaned. This allowed detergent residue to accumulate on oven electrical parts causing corrosion and saturation of fiberglass insulation. This caused wiring to overheat and in some cases caused ovens to emit dangerous fumes.

c. McDonnell Douglas issued All Operators Letter C1-750-83/TS/RD, dated March 21, 1978, which lists acceptable detergents for oven cleaning.

d. To reduce the hazards of possible crew incapacitation from ovens that were improperly cleaned, principal inspectors should bring this to the attention of their assigned operators and suggest that they review their galley oven cleaning procedures. *

25-34. PASSENGER SEAT ARMREST RETRACTION.

a. During surveillance of B-727, B-737, and DC-8 aircraft, many passenger seat armrests were found protruding aft into the space between the seat rows.

b. A fleet inspection by one air carrier revealed that some of the bumpers which stop the armrests in the retracted (vertical) position were missing. This allowed the armrests to be rotated approximately 180° from the normal position and protrude into the aft seat row aisle space.

c. This situation constitutes a potential safety hazard and could occur on other model aircraft. The armrests could interfere with the free flow of passengers during emergencies.

d. Principal airworthiness inspectors are requested to bring this to the attention of their assigned operators. All inspectors should check for proper operation of armrests as part of any inspection of aircraft interiors.

25-35. LIFE PRESERVER STOWAGE.

a. A recent accident investigation that involved an unplanned ditching of a jet transport aircraft revealed that several surviving passengers experienced difficulty in removing life preservers from the underseat stowage pouches. They also had difficulty in unpacking life preservers from the sealed plastic bags.

b. As a result of this accident, three passengers drowned and several survivors entered the water without life preservers. This may have been attributed to several life preservers not being readily accessible or removable.

c. Federal Aviation Regulations (FAR) Section 121.309(b) requires that emergency and flotation equipment must be inspected regularly to ensure its condition for continued serviceability and immediate readiness to perform its intended emergency purposes and be readily accessible. FAR Section 121.340(a) requires that this equipment must be readily removable from the airplane.

d. Principal inspectors are requested to review their assigned operators' procedures for maintenance and inspection of life preservers to ensure that while in service they are readily accessible and can be readily removed from the airplane if needed.

25-36. PASSENGER SEAT COVERS.

A Part 121 air carrier performing a burn test on new and used passenger seat covers discovered that the material did not pass the self-extinguishing requirements of Section 25.853(b) of Federal Aviation Regulations (FAR) Part 25.

b. The newly manufactured bulk nylon material passed laboratory tests at the manufacturers. However, some newly fabricated nylon seat covers have been impregnated with silicone to expedite sewing and material handling and tend to fail the self-extinguising tests required by FAR Section 25.853(b). Also, there are indications that some used seat covers have also been found with some build up of silicone and will also fail the self-extinguishing test requirements.

c. Research indicates that silicone substance is difficult to remove from seat covers by dry cleaning or cold/hot water washes.

d. Principal airworthiness inspectors are requested to bring this matter to the attention of their assigned operators and determine that the operator's seat covers used in its aircraft are still meeting the requirements of FAR Section 25.853(b).

*25-37. DEPARTMENT OF TRANSPORTATION (DOT) 3HT AND 4D TYPE CYLINDERS MANUFACTURED UNDER EXEMPTIONS. The Department of Transportation amended 49 CFR Parts 173 and 178 of the hazardous materials regulations on January 17, 1978, by extending the service life of the DOT 3HT type cylinders from 15 to 24 years. However, there are certain DOT approved cylinders that have been manufactured under special permits (SP). The service life extension provided in the amendment for DOT 3HT cylinders does not apply to SP numbered cylinders even if those cylinders are marked as DOT 3HT. There are other SP numbered cylinders manufactured under DOT Specifications 4D, 4DA, and 4DS that may be found on aircraft. The status of SP numbered cylinders is as follows:

a. The service life of the B-747 aircraft emergency slide gas generator cylinder with Boeing P/N 60B50170, manufactured under DOT SP 5967, remains at 15 years and the cylinder is subject to hydrostatic pressure check at least once in 3-year intervals.

b. The service life of the B-747 aircraft emergency slide/raft inflation cylinder with Boeing P/N 60B50333 manufactured under DOT SP 7218 remains at 15 years and the cylinder is subject to hydrostatic pressure check at least once in 3-year intervals.

c. In addition, the service life of cylinders manufactured under DOT SP 5861 and SP 7945 is unlimited and the cylinder is subject to hydrostatic pressure check at least once in 5-year intervals. *

d. If other cylinders manufactured under DOT SP numbers are used on aircraft, the status of those cylinders must be individually determined with respect to service life limits and hydrostatic pressure check intervals.

e. This information should be brought to the attention of operators who may be using DOT cylinders manufactured under special permits. Operators using SP numbered DOT cylinders are responsible for determining the inspection status of those cylinders, and listing that status in the operations specifications.

25-38. GENERAL PNEUMATIC CORPORATION LIFERAFT PRESSURE CYLINDER REGULATOR PART NO. D5008-3.

a. An operator reported that while accomplishing shop overhaul of a model C-42A liferaft, the raft would not fully inflate during the inflation test. The operator checked 19 spare rafts of the same model in its inventory and found 6 that also would not fully inflate. As a result, they are in the process of conducting a fleet campaign.

b. The liferafts were purchased from Switlik Parachute Company, Inc., Trenton, New Jersey. Switlik obtained them from the American Safety Company, Miami, Florida, who manufactured them in 1977 and 1978 under TSO C-12-c. General Pneumatic Corporation, Orange, New Jersey, manufactured the pressure cylinder regulator for the liferafts. It is not known if the D5008-3 pressure cylinder regulator is used for other model liferafts.

c. Preliminary investigation has revealed defective O ring/gaskets installed in the liferaft pressure cylinder regulator, Part No. D5008-3. It was also revealed that if the pressure cylinder is found to be more than .07 of a pound lower in weight than that printed on the cylinder the raft may not fully inflate. Inflation tests with weighed cylinders have shown that a weight loss of no more than .07 of a pound will give a full inflation.

d. Principal airworthiness inspectors are requested to bring this to the attention of their assigned operators. If the operator has the subject pressure cylinder regulator installed in any liferaft, assure that inspection procedures adequately cover any pressure cylinder leakage problems that might occur.

* 25-39. PERSONNEL/FOOD CART LIFTS.

a. A recent accident involved a DC-10 flight attendant who became entrapped in a lower galley personnel/food cart lift.

b. Although all of the facts surrounding this accident are not all available at this date, preliminary information, however, indicates that several problems may exist in the DC-10 galley lift system of which principal airworthiness inspectors assigned to DC-10 operators should be aware.

c. Lower galley lifts are being operated with the doors open (such operation is possible if door interlock switches are defective or have been manually by-passed).

d. Lower galley lift electrical and mechanical interlocks are being damaged by food carts striking the lift center door jamb post and lift doors. Food cart impact damage to the door jamb center post can cause distortion of the electrical interlock switch body (housing) and/or bracketry which may result in unreliable switch operation. Food cart impact damage to galley lift doors can distort or spring the door sufficiently to impair mechanical interlock operation. Door damage can also misalign door/interlock switch position to such a degree that the door, when closed, will not depress the interlock switch sufficiently to enable normal lift operation. This condition has caused operation of the lifts with the door open and interlock switches by-passed to facilitate passenger meal service.

e. Because other wide-bodied aircraft have similar galley lifts installed, principal airworthiness inspectors should review their assigned wide-bodied aircraft operators personnel/food cart lift maintenance procedures to ensure that they include a satisfactory test of door interlock switch operation. Maintenance inspection procedures should also evaluate physical damage to lift doors and the door jamb center post to preclude unreliable operation of electrical and mechanical interlocks. If a galley lift is not functioning properly, an "inoperative placard" should be installed until repairs have been accomplished.

f. Principal airworthiness inspectors should also review the frequency of lower galley lift inspections based upon their assigned operator's service experience. *

* 25-40. WIDE-BODY AIRCRAFT FOOD/BEVERAGE SERVICE CART RESTRAINING AND LATCHING MECHANISMS.

a. Difficulty experienced in removing food/beverage carts from the restraining mushroom in food cart lifts is believed to be a contributing factor in two serious flight attendant injuries and a recent fatal accident. (Reference National Transportation Safety Board Recommendation No. A-82-1.)

b. Interviews with flight attendants and observations during en route inspections have revealed that many food carts presently in service do not function properly because of poor mechanical conditions of the restraint release mechanism. The mechanical condition of these carts may be attributed to the fact that cabin and galley equipment is not normally considered to be an aircraft maintenance significant item. As such, timely corrective maintenance action is not assured when discrepancies are noted.

c. When a cart becomes stuck on a lift restraint mushroom, it is not uncommon practice to override the interlock switches to raise the lift to a workable height to allow access underneath the cart to free it. This dangerous practice may have led to previous lift accidents.

d. The exposure to danger arising from attempts to free food carts from the lift restraint (mushroom), indicates a need for a more effective cart maintenance program to reduce such exposure to a minimum.

e. Wide-body aircraft service cart restraining mushrooms have been extensively used in main galleys and remote locations in passenger cabins as well as in lower lobe galleys and galley lifts. Service experience has shown that cart latching mechanisms when accurately maintained will operate properly when used in conjunction with the mushroom restraint devices.

f. Principal airworthiness inspectors assigned to operators with aircraft equipped with galley service lifts and utilize cart to mushroom restraining devices are requested to:

(1) Evaluate the operators service cart maintenance/inspection program for adequacy making certain that procedures for inspection of restraining and latching mechanisms are included.

(2) Ensure the operators' procedures include timely correction of service cart discrepancies.

(3) Place increased emphasis on service cart latching mechanisms during routine surveillance.

25-41. SARGENT INDUSTRIES, PICO DIVISION, EMERGENCY EVACUATION SLIDES, PART NUMBERS 11331 AND 11331-1, APPROVED FOR USE ON DC-9 SERIES 10, 30, 40, AND 50 AIRCRAFT.

a. A DC-9 operator reported a main cabin door emergency evacuation slide, Part Number 11331, failed to inflate when activated prior to removal from the aircraft for overhaul.

b. Investigation revealed that the slide did not inflate because the inflation valve and hose assembly in the slide inflation system were not compatible with the aspirator assembly.

c. Sargent Industries, PICO Division, issued Service Bulletin DC-9-25-88 dated June 1, 1981, to describe procedures for replacement of components of the subject emergency evacuation slides.

d. Principal maintenance inspectors are requested to bring this to the attention of their assigned operators and repair agencies authorized to repair and overhaul emergency evacuation slides, Part Numbers 11331 and 11331-1, and assure that current overhaul manuals and manufacturers instructions are being used.

* 25-42. CORROSIVE PROPERTIES OF FLAME RETARDANT SOLUTIONS.

a. Major cockpit corrosion and passenger seat damage were found in two Convair 240 aircraft. Investigation disclosed the seat covers and cockpit carpeting had been treated with a flame retardant approximately 10 months prior. The flame retardant was referred to as Anti-Flame No. 200-Solution C-24-5.

b. A sample of carpet and seat cover was examined, along with a sample of Fire Retardant Anti-Flame No. 200, to determine if the fire retardant could be responsible for corrosion of metal surfaces exposed to the carpet and covering. It was determined that the fire retardant caused distinct corrosion on aluminum metal in a period of 3 days. Bromide, ammonia, and phosphate were found in the fire retardant and it appears that the combination of these substances has a distinct effect on the degree of corrosion caused by the fire retardant.

c. The aircraft suffered considerable intergranular type corrosion damage to the cockpit aluminum floor covering, floor frame structure, and seat tracks. Two passenger seats at the rear of the aircraft cargo compartment incurred major corrosion damage to the aluminum seat structure in areas where they came in contact with the Anti-Flame No. 200 treated seat covers.

d. Principal maintenance inspectors are requested to bring to the attention of all owners, operators, and repair facilites the possibility of corrosive properties of certain flame retardant solutions. *

25-43. INSPECTION OF INDIVIDUAL FLOTATION DEVICES - PASSENGER SEAT CUSHIONS.

a. During a spot inspection of B-727 and DC-9 aircraft that had passenger seat cushions identified on passenger information cards as flotation devices, 80 percent of the seat cushions were found to be unsatisfactory.

b. The cushion shrouds were found deteriorated where the retaining straps attached to the shroud platform. This allowed the straps to be easily pulled from the cushion.

c. During another inspection an inspector found retaining straps missing from all the seat cushions in the aircraft. The passenger information cards also identified the seat cushions as flotation devices. Cushions in this condition would not be adequate for water survival.

d. Principal inspectors are requested to bring this to the attention of their assigned operators and assure that they have adequate procedures for the inspection and repair of passenger seat cushions identified for use as flotation devices. This subject should be emphasized during normal surveillance activities.

* 25-44. EASTERN AERO MARINE, INDIVIDUAL FLOTATION DEVICES, GA-12.

a. A recent National Transportation Safety Board accident investigation of a Britten Norman BN-2A6 aircraft, which was involved in a water ditching, revealed several serious safety deficiencies concerning individual flotation devices (single tube), Model GA-12, Part Number PO 201-101. Eastern Aero Marine (EAM) of Miami, Florida, manufactures these devices.

b. These deficiencies consisted of erroneous identification of the name and Technical Standard Order (TSO) information on these devices, loose carbon dioxide (CO_2) inflation cylinders, and failure of some cylinders to maintain gas pressure.

c. Flotation devices were mistakenly labeled as a "LIFE PRESERVER" and shown to conform to "TSO-C13c, ATA 801"; however, they should have been labeled "INDIVIDUAL FLOTATION DEVICES, TSO-C72b." Eastern Aero Marine has taken corrective action by issuing a Service Information Letter (EAM SL 9/84) which notified all holders; i.e., distributors and authorized overhaul repair stations of this labeling problem. Additionally, it provided detailed instructions to correct the data information panels on mislabeled devices. The following serial numbered devices may be mislabeled:

D04198 through D04803	D13070 through D14069
D18519 through D19518	D27032 through D28281
D38411 through D39742	D48214 through D49713

*

* d. Maintenance personnel should follow the procedures shown in the EAM maintenance and overhaul manual when inspecting these flotation devices for proper attachment of the pressure cylinders and proper cylinder CO_2 pressure.

e. Principal airworthiness inspectors shall bring the above deficiencies to the attention of their assigned certificate holders. Inspectors shall also emphasize the holders' responsiblity under the pertinent Federal Aviation Regulations to properly inspect/maintain these devices. Certificate holders should continually review their programs to assure that procedures are provided to detect the above discrepancies.

f. Principal airworthiness inspectors shall also review their assigned certificate holders' maintenance manuals to assure the adequacy of procedures and the maintenance of flotation devices. *

APPENDIX 6. FIRE PROTECTION (ATA CODE 2600)

26-1. McDONNELL DOUGLAS DC-8 SIXTY SERIES AIRCRAFT -- FIRE AGENT DISCHARGE AND AGENT LOW PRESSURE INDICATING SYSTEM. An evaluation of the subject system disclosed that although the design satisfactorily complied with the requirements of CAR 4b.484c(2), the system contains characteristics which should be brought to the attention of all persons who operate and/or maintain this equipment.

The "Fire Agent Discharge and Agent Pressure Low Indicating" system is designed in a manner which will allow the "press-to-test" lights to illuminate with their respective circuit breakers open; i.e., no direct power input. This situation is a result of electrical current being drawn through the filaments of two other indicator lights before passing through the test contacts of the light being pressed. When this occurs, all three lights will be dimmer than normal (1/3 intensity).

The following information is provided to clarify the situation:

a. If the bulb under test does not illuminate, it should be replaced.

b. If only the bulb under test illuminates bright amber, the bulb and its respective power circuit are satisfactory.

c. If the bulb under test and two additional bulbs not under test all glow with 1/3 normal brightness, the bulb is satisfacyory, but its respective input power circuit is open. Check to be sure that the circuit breaker is closed. If the condition persists with the circuit breaker closed, the input power circuit to the bulb is defective, and maintenance is necessary.

It is recommended that air carrier operators utilizing DC-8 sixty series aircraft be advised of this situation and encouraged to include this information in their respective maintenance and training manuals.

26-2. FAIRCHILD F-27 AND FH-227 AIRCRAFT - WALTER KIDDE FIRE EXTINGUISHER SYSTEMS. There have been instances of reversed electrical connections in Walter Kidde fire extinguisher valves, P/N 892973, and in contact extension, P/N 874296. Two different type discrepancies were found:

a. Pins "A" and "B" were reversed in value P/N 892873. Pin "A" was grounded instead of pin "B" as required.

b. Alignment slot for contact extension, P/N 874296, was 180° out of phase thereby reversing relationship between the contact extension and ship's wiring connector, P/N MS 3106-10SL-45.

Either type discrepancy will prevent discharge of the affected fire extinguisher bottle because the resultant short circuit trips the circuit breaker and no electrical power is received at the cartridge connector.

Fairchild-Hiller issued telegraphic service information recommending checks of the Walter Kidde valves and contact extensions to assure proper continuity in bottle discharging electrical circuits through to the ship's wiring connectors. The recommended check procedure was, "within the next 25 flight hours, make a resistance check to ascertain that pin "B" is grounded internally and pin "A" is connected to the cartridge connector. Check for 0.025 to 0.1 ohm from pin "A" to ground and 0.0 ohm from pin "B" to ground using an ohmmeter which will allow no more than one ampere current flow."

Cases have been noted wherein aircraft wiring was modified to compensate for reversed connections found in valves and/or contact extensions. This practice should be followed by a positive procedure to assure proper circuit continuity after subsequent valve and/or contact extension replacement. Future discrepancies of this nature should be reported and information made available to the region holding type certificate responsibility.

26-3. <u>CO^2 FIRE EXTINGUISHER SYSTEM RELEASE MECHANISM FAILURE</u>. An operator of a Douglas Model DC-3 aircraft experienced an in-flight engine fire. The CO^2 fire extinguishing agent could not be released to control the fire which resulted in considerable aircraft damage.

a. The investigation disclosed that the fire extinguisher manual release valve failed to operate. Further examination and testing revealed the following problems:

(1) An overlength screw was used to fasten the release cable slip onto the actuating lever in the valve housing head assembly. The manufacturer's drawing specifies a 5/16-inch long fillister head screw. A round head screw, 3/8-inch in length, was actually installed; score marks on the housing surface were evident, and full movement of the lever assembly was restricted due to the excessive screw length.

(2) Evidence of the lack of lubricant was noticeable by the flat wear spots on the valve head release cam roller parts which could also adversely affect normal release operation.

b. CO^2 fire extinguisher system has been known to malfunction as the result of moisture accumulation in the release valve head assembly causing surface corrosion build-up. Since the fire extinguisher valve actuator's internal parts are susceptible to contamination, inspection intervals may be warranted.

c. To eliminate or reduce malfunctions of this nature, assigned inspectors should review their operator's maintenance program to assure that all system components are periodically inspected, maintained, and functionally tested in accordance with the instructions and procedures specified by the manufacturer.

d. Similar conditions may also be experienced with other aircraft makes and models equipped with CO^2 fire extinguisher system.

26-4. DRY CHEMICAL FIRE EXTINGUISHING AGENT RESIDUE REMOVAL. A Douglas DC-9 operator extinguished a fire in the flight attendant panel using Ansul Plus-fifty dry chemical. After normal cleanup of the panel and replacement of damaged electrical wires and components, a thorough checkout was performed and the electrical system functioned normally. Prior to engine and system checks, the aircraft was exposed to rain and high humidity. During the engine checkout, flash-over on a terminal strip caused three-phase 50 amp circuit breakers to be tripped. Crackling and spluttering of other circuits occurred but no extinguishing agent was used.

a. It was presumed that residue of the dry chemical used in extinguishing a previous fire became conductive when exposed to moisture and caused surface breakdown of electrical insulation. Later, it was found that normal cleanup methods were inadequate to remove the dry chemical residue.

b. There are three dry chemicals in widespread use as fire extinguishing agents. These are Ansul Plus-fifty (Sodium Bicarbonate), Purple K (Potassium Bicarbonate), and ABC Powder (Ammonium Phosphate). These agents are electrically non-conductive in the dry state but are hygroscopic, and therefore, when moistened are electrically conductive as well as corrosive to most common metals. Parts exposed to dry chemicals will corrode after being subjected to high humidity. Dry chemicals consisting of Sodium Bicarbonate are less hygroscopic than Purple K or ABC.

c. It is recommended that all operators using dry chemical extinguishing agents adopt cleaning methods suitable for that particular chemical. The operator mentioned above has established the following procedure.

(1) Thoroughly wash with water, then dry in an oven or equivalent; or,

(2) Where water may not be compatible with the part, use industrial-grade ethyl alcohol for cleaning and rinsing. Air dry to remove alcohol.
Note: Isopropyl and methyl alcohol are not suitable.

(3) Check for the presence of remaining soda chemical using Phydrion (PH) Range 0-14 paper directly to the concerned part. If PH is 9 or more, additional cleaning is required. PH paper is available from chemical supply houses.

*26-5. KIDDE AIRCRAFT WATER EXTINGUISHERS. Several cabin attendants have recently reported a problem associated with the Kidde water fire extinguisher. Indications are that the large flange on the end of the handle is positioned and safety-wired such that the trigger foot is resting on the inboard or bottle side of the handle flange. When this condition occurs and it is necessary to use the extinguisher, the handle must be partially unscrewed, the trigger lifted, and the handle screwed in again to discharge the C-O two cartridge. Normally it is only necessary to screw in the handle to activate the unit. Correctly positioned, the trigger foot should be resting on the outer periphery of the flange with the flange acting as a stop against depressing the trigger. Flange position is then maintained by safety wire. (See diagram on Page 5.)

It is recommended that this be brought to the attention of assigned carriers and a determination made that the extinguisher manufacturer's maintenance manuals are complied with. *

*

KIDDE AIRCRAFT WATER EXTINGUISHERS

PART NOS. 870317, 871685, 890017, 890275,
891318, 892480, 893948.

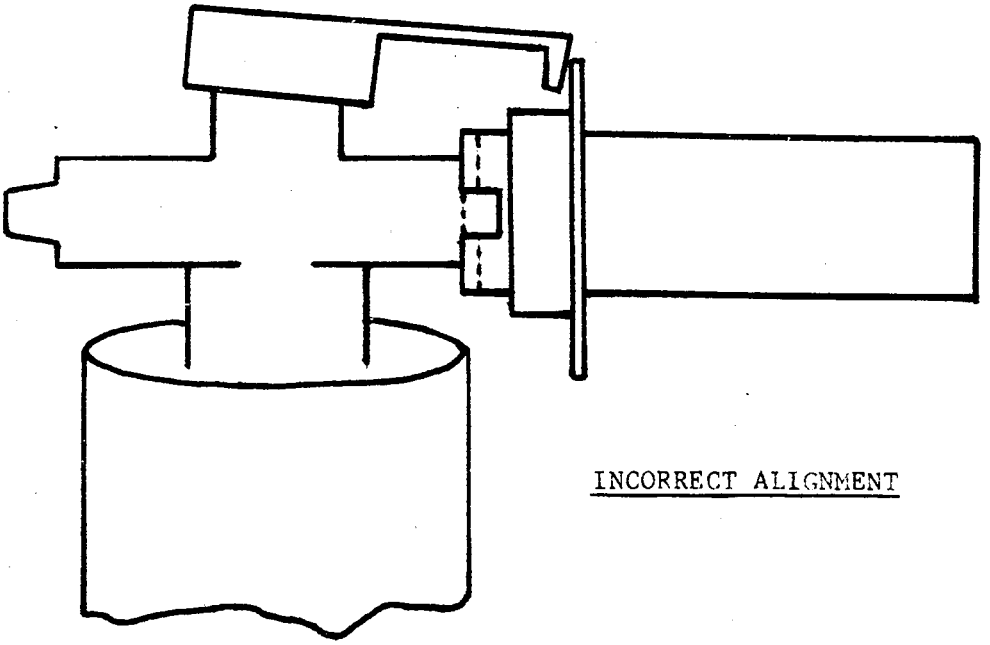

INCORRECT ALIGNMENT

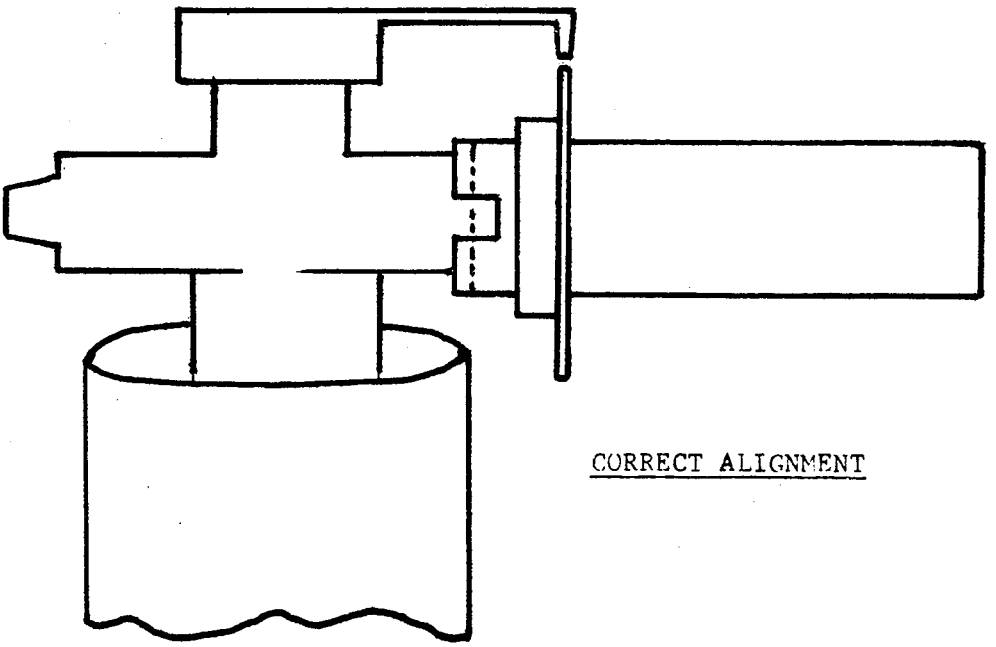

CORRECT ALIGNMENT

*

*26-6. EDISON ELECTRONICS - MODEL 294, FIRE DETECTOR CABLE ASSEMBLY. Reliability of fire detectors seems to be a function of maintenance practices used on numerous connectors required in the installation. The small diameter male pins on the cable assembly are hollow and susceptible to being bent. When straightened, an unobserved pin fracture may occur, which ultimately results in a system failure. It is important to keep the connectors clean since contamination also results in failures. Other areas of failure involve improper clamp and grommet installations which often result in short circuits. Clamps with grommet protection should be checked for security and clearance when subject to vibration. It is recommended that this information be brought to the attention of all operators using Edison Electronics Model 294 fire detector cable assemblies. *

APPENDIX 7. FLIGHT CONTROLS (ATA CODE 2700)

27-1. DOUGLAS DC-7B - AILERON BELLCRANK FAILURES. Several operators have had numerous broken or loose aileron bellcranks.

One operator attributed the failures to extremely gusty weather; however, further investigation indicates that operational procedures may be a factor.

Douglas recommends that the gust locks be engaged at the latter part of the landing roll just prior to turnoff. This procedure will tend to eliminate undue stresses on the control surfaces due to high gust loads during turnoff.

It is suggested in case of broken or loose bellcranks that the gust lock operational procedures be reviewed.

27-2. DC-3 AILERON CONTROL ROD ATTACHMENT FAILURE AND INTERNAL CORROSION IN THE PUSH-PULL TUBES. During a routine check, an aileron push-pull rod attachment was found sheared. Investigation revealed that the failure occurred as a result of stresses imposed in the threaded area of the attach fitting. The cause of the failure was attributed to the installation of a Fafnir non-aligning bearing instead of the correct self-aligning bearing.

Inspection of the push-pull rods that were removed from the aircraft revealed enough internal corrosion in four of the rods to cause rejection of the part. Further inspection of rods from local sources resulted in the rejection of three out of five rods due to corrosion. While visual and magnaflux inspections are productive, they do not always detect corrosion. An X-Ray or other type of inspections may be necessary in order to detect internal corrosion in push-pull rods, engine mounts, and tubular structure.

We recommend that this information be furnished to DC-3 operators for appropriate action.

27-3. FAIRCHILD F-27 AND FH-227 AIRCRAFT - ELEVATOR TRIM TAB DIFFICULTY. An F-27 operator experienced an inoperative elevator trim tab condition in flight. The aircraft returned and landed without difficulty.

a. Investigation revealed that the tab actuator chain link pin was missing and the chain was disconnected. The link pin retainer consists of a plain nut staked to the threads after installation. (The tab operating mechanism consists of a cable-driven drum with a sprocket/chain connecting the drive to the actuator.)

b. It is recommended that all operators of F-27 and FH-227 aircraft inspect the tab actuator drive chain to assure the integrity of the pin retainer nut. Added emphasis should be placed on the inspection of the drive chain during scheduled inspections. Chains found with defective parts should be replaced.

27-4. FAIRCHILD HILLER F-27 AND FH-227 SERIES AIRCRAFT -- AILERON AND ELEVATOR HINGE BEARINGS. Several service difficulty reports concerning F-27 and FH-227 aileron and elevator hinge bearings have been received. The majority of these reports indicated that excessive friction and/or wear was attributed to the loss or contamination of the bearing lubricant.

Fairchild Hiller Corporation issued Service Letters F27-544 and FH227-27-30 to improve bearing service life and to recommend the replacement of the present bearings with MS27261KSP series bearings. These service letters also identify the location and part numbers of the affected bearings. In addition, the manufacturer recommends these bearings be replaced at the operator's earliest convenience of at any time bearing replacement is required.

27-5. FAIRCHILD HILLER F-27 SERIES AIRCRAFT - WING FLAP DRIVE AND CONTROL SYSTEM. The electrical contacts of a F-27 wing flap motor control relay fused together during flap extension. This caused the flap motor to extend the flap drive couplings completely off the end of the jackscrews.

a. Airworthiness Directive 69-6-1 was issued to require inspection and rewiring of F-27 flap control circuits which incorporate Cutler Hammer P/N 6046 H46 relays. A previous AD (68-1-5) required an identical inspection and rework on F-27 aircraft incorporating Hartmen MC-815 flap motor controllers.

b. F-27 aircraft modified in accordance with either of the two ADs identified above are protected against flap overtravel because of an additional flap circuit motor control relay and added limit switches.

F-27 operators should be encouraged to incorporate necessary changes in their maintenance programs to assure that modified F-27 wing flap circuits are properly maintained.

27-6. BOEING 707 SERIES AIRCRAFT - SPOILER HYDRAULIC SYSTEM. A broken outboard spoiler down pressure tube (between the swivel fitting and actuator) is believed to have caused loss of hydraulic fluid and pressure moments before a recent B-707 fatal accident.

Service history involving B-707 aircraft shows that failures or other problems with the subject pressure tubes and associated plumbing in the various spoiler positions are the frequent causes of fluid leaks and mechanical delays. Special inspections of B-707 spoiler hydraulics plumbing conducted by several operators following the aforementioned accident revealed many discrepancies. Findings during these inspections indicate that improved and more frequent inspection of B-707 spoiler hydraulics is needed.

It was found, for example, that numerous pressure tubes in the various positions were cracked, kinked, rubbing on structure, misaligned, and in strained positions; chafing and worn in supporting blocks; or leaking at "B" nuts. Also, swivel fittings were found with torque settings too high and some were misaligned or leaking.

Corrective action was accomplished by some operators to improve B-707 hydraulics system reliability. For example: (1) Tubing wear tolerances were used during inspection. (2) New replacement tubes were fabricated of type 304 stainless steel .049" wall thickness in lieu of .035" material. (3) Inspection frequencies were increased and procedures have been changed to include hydraulic pressure checks of spoiler plumbing during inspection.

Boeing issued Service Bulletin 2926 dated August 15, 1969, was directed toward improving the B-707 spoiler hydraulics system.

It is recommended that inspectors reassess and assure the adequacy of each operator's B-707 maintenance program and procedures related to spoiler hydraulics plumbing and associated hardware.

27-7. BOEING 720 AIRCRAFT CABLE FAILURE. A right outboard aileron bus cable was found broken during a turnaround inspection. The cable involved is located between the cable slack takeup cylinder and the outboard aileron bellcrank. The failure resulted from cable wear in the pulley-run area where it passes over a pulley cluster at wing station 369. Inspection of this area can be accomplished by lowering the flaps and opening the cove lip door. The time-in-service of this particular cable was between 7000 and 8000 hours since it was changed and 423 hours since it was inspected. Analysis of this cable failure is being made by the manufacturer.

In view of the seriousness of such incidents, we recommend that the information be furnished to all Boeing 707/720 aircraft operators for necessary action.

27-8. McDONNELL DOUGLAS DC-9 SERIES AIRCRAFT -- HORIZONTAL STABILIZER OSCILLATION. An operator experienced three flight interruptions due to abnormal oscillations of the horizontal stabilizer. These oscillations were transmitted to the pilot through flight control and fuselage vibration and were aggravated by mild turbulence at cruising speeds.

a. The cause of the problem was traced to a loose jackscrew base nut on the bottom of the Longitudinal Trim Actuator Assembly. This looseness is attributable to improper torquing techniques; the aircraft was relatively new and normal wear was not considered to be a factor.

b. Torquing techniques, contained in McDonnell Douglas DC-9 Service Bulletin No. 27-84, Revision 2, dated August 7, 1968, are as follows:

(1) Remove all tension load between the screw, P/N 5914168, and nut assembly, P/N 5914405. A compression load is acceptable. When the assembly is installed in the airplane, use restraining fixture, P/N 4916750, to unload the jackscrew. If the load is not removed during the tightening procedure, improper torquing will result as the stabilizer weight will be acting against the tightening of the base nut.

(2) Torque the nut assembly, P/N 2915792-1, to 110 foot-pounds.

(3) Back off the nut assembly until the washer, P/N 2919060-1, is free to rotate.

(4) Retorque the nut assembly to 30 foot-pounds (plus or minus 5) and safety.

27-9. BOEING 727 SERIES AIRCRAFT - ELEVATOR AND AILERON BALANCE PANEL HINGES. Several air carrier operators found a number of broken hinges on Boeing 727 elevator and aileron balance panels. As many as 29 lobes were found broken on a single hinge. The total aircraft time was from 13,000 hours to 15,000 hours.

One of the operators made a study of the problem and determined the cause of the failure was due to the hinge pin freezing because of lack of lubrication. Movement of the controls caused the hinge lobes to bend until metal fatigue occurred.

In order to correct the difficulty, one of the carriers included the lubrication of these hinges in their periodic check periods and block overhaul.

To preclude the failure of these hinges, it is recommended that FAA inspectors bring this matter to the attention of their assigned operators and ascertain that an adequate lubrication program is established in the maintenance program. A dry film type lubricant is recommended since it is less likely to induce corrosion.

27-10. FAILURE OF WING FLAP ATTACH BOLTS, L-188 AIRCRAFT. An L-188 aircraft left wing flap was extensively damaged due to the failure of the outboard flap track attach bolts. Reports were received indicating that various air carriers found some attach bolts below the manufacturer's prescribed torque values.

Investigation of the failed bolts revealed that the failure was due to low torque value. In view of the circumstances regarding the failure and the reports of bolts found below the specified torque value, we recommend inspectors determine that operators of L-188 aircraft have established satisfactory periodic torque checks. In addition, we recommend that any bolt found below the minimum torque value be removed and thoroughly inspected and replaced. The flap track attachment area and bolts should be thoroughly inspected for any unsatisfactory condition that may have resulted from loose bolts. All defective or worn parts should be replaced.

27-11. LOCKHEED L-188 WING FLAP TORQUE TUBE FAILURES. An operator experienced two failures of the flap drive torque tubes (P/N 807723-1) on L-188 aircraft. The flap asymmetry switch operated normally in both instances. No uncontrollable condition resulted.

a. Investigation disclosed the cause for these failures was seizure of the support bearing, resulting in torque tube friction and wear at the point of contact with the support bearing inner race. Due to this friction wear, sufficient metal was removed from the torque tube outer surface to cause failure of the tube under normal operating torque loads.

b. Further investigation revealed that the support bearings, FAFNIR KP16B-E7012, were installed as received from the bearing manufacturer. They were packed by the manufacturer with a dark blue lubricant equivalent to MIL-G-25760, which solidified in service and contributed to the bearing failure (seizure). Approximate total service time of these bearings was 5000-7000 hours. There are 16 flap torque tube support bearings installed per aircraft system.

(1) Shell Oil Company, manufacturer of the bearing lubricant, also investigated this problem. Shell now uses a Microgel thickener instead of the blue dye type additive in MIL-G-25760 grease.

(2) During a fleet inspection by the operator, several additional defective flap torque tube support bearings were found at various positions in the flap drive system. All these cases resulted from lubricant solidification.

c. To correct this problem, the operator has:

(1) Removed all these bearings from the aircraft and spare parts supply and repacked them with a low temperature grease equivalent to MIL-G-3278, as recommended by Lockheed and originally used in the bearings.

(2) Adhered to wing flap torque tube inspection procedures and periods recommended in Electra Alert Bulletin No. 88/SB-570 dated June 20, 1962. This should facilitate early detection of potential bearing and/or flap torque tube problems.

27-12. MARTIN 404 AIRCRAFT AILERON COUNTERWEIGHT VANE BRACKET FAILURE. During a routine inspection of the M-404 aircraft, the inboard left aileron counterweight vane bracket P/N 404-4100004-7 was found cracked. Discoloration of the cracked area indicated that the bracket had been cracked for a long period of time. Eight similar brackets are located on each aileron, and they are identified by a different dash number following the part number. (Reference: M-404 Parts Catalog, Wings, page 6 - figure 3 - and page 8.)

In view of the hazards associated with this type of failure, we recommend that this information be furnished to M-404 aircraft operators for appropriate action.

27-13. LOCKHEED MODELS 049 THROUGH 1049, AND 1649A SERIES AIRCRAFT - ELEVATOR TRIM TABS. Major structural damage to a trim tab and elevator of a Constellation aircraft was found. This failure occurred during flight and is believed to be attributable to excessive wear in the connections between the trim tab actuator push-pull rods and the trim tab brackets. Lockheed recommended a one-time inspection of the elevator and trim tab actuation system be performed within the next 25 flight hours.

It is recommended that operators be made aware of this incident.

27-14. DOUGLAS DC-8 FLAPS AND FLAP SYSTEM PROBLEMS. A review of MRRs and other technical data concerning malfunction and failure of DC-8 flap linkages and flap attachments indicates that the abnormal loadings leading to the failures were usually the result of inadequate lubrication. The importance of adequate periodic lubrication of all flap actuating components cannot be overemphasized.

The entire June 1972 issue of "Douglas Service" published by McDonnell Douglas Corporation is devoted to this subject. Copies of service letters to operators are included with instructions for lubrication, rigging, and inspection of flaps and components.

All DC-8 operators should be reminded of the importance of an adequate flap lubrication and maintenance program and informed of the availability of the McDonnell Douglas publication.

27-15. AMATEUR-BUILT STITS PLAYBOY MODEL SA-3A STABILIZER ATTACHMENT DESIGN. Fatigue failure of the right forward fitting for the horizontal stabilizer attachment resulted in a fatal accident.

All purchasers of plans for building the Stits Playboy aircraft were supplied with Stits Drawing Sheet No. 8A which indicated the fix required to strengthen this attachment point. This aircraft was not modified, although the bulletin was found among the aircraft records.

Personnel performing original or recertification actions for experimental certification of Stits Model SA-3A aircraft shall ensure that the stabilizer attachments are modified in accordance with the instructions developed by Stits, or by an equivalent method found to be acceptable, prior to issuance of a certificate. Information concerning the change recommended by Stits should be provided by the aircraft owner. In those cases where the owner chooses to use an alternate modification in lieu of that recommended by Stits, amend the operating limitations to require compliance with FAR 91.42(b).

27-16. McDONNELL DOUGLAS MODEL DC-10 AIRCRAFT -- ANGLE-OF-ATTACK SENSOR EXPOSURE TO DAMAGE. The angle-of-attack sensors are located just forward of the cabin doors on both the left and right sides of the fuselage. Sensor damage may occur when passenger ramps, loaders, or stands are positioned at these doors.

a. To alleviate this problem, one operator has painted a red line just aft of the sensors as a guide to be used for positioning ramps, loaders, or stands.

b. This information should be brought to the attention of all operators using McDonnell Douglas Model DC-10 aircraft.

*27-17. INSPECTION OF MS21251-B3L TURNBUCKLES. There have been several reports of 3/32-inch brass turnbuckles, MS21251-B3L, cracking. The reported examples had longitudinal cracks which appeared to originate in the broached keyway. We believe that the cracking is associated with stress corrosion on turnbuckles which were not stress relieved after machining operations. The turnbuckles reported were manufactured by Linair Teledyne (Achilles). The manufacturer's trademark consists of four diamonds clustered in the shape of the letter T. We believe that the suspect turnbuckles were manufactured prior to May 1971 and between April 1973 and April 1974.

Some of the turnbuckles involved were installed in DC-8, DC-9, and DC-10 aircraft, although the use of the suspect turnbuckles is not necessarily limited to these specific types of aircraft. McDonnell-Douglas has issued an All Operators Letter, C1-750-201/COM/ Program, which recommends inspection for suspected turnbuckles on certain aircraft manufactured by them.

During the next major airframe inspection of these aircraft, emphasis should be made to detect turnbuckles which can be identified with the Linair Teledyne trademark and dates of manufacture as provided above. (The code mark covering date of manufacture may or may not be stamped on the turnbuckle.) All cracked turnbuckles should be replaced.

It is recommended that maintenance inspectors bring this matter to the attention of all owners/operators of aircraft who may be using MS21251-B3L turnbuckles. *

* 27-18. BOEING MODEL 747 SERIES AIRCRAFT - WING TRAILING EDGE FLAP MALFUNCTIONS.

1. A review of known flap malfunction data has been made on the Boeing Model 747 aircraft. The study revealed two items that could improve flap bearing reliability and, in turn, the total flap system.

   a. First, the flap bearings are unsealed units exposing the internal parts to water and other foreign debris. The Boeing Company currently has a sealed bearing with improved lubrication provisions which will be installed in the mid-flap at the foreflap load-bearing position. The new sealed units are considerably more expensive than the older bearings, but are interchangeable and should be more durable. There are no plans to use sealed bearings at any other flap position.

   b. The second item involves flap lubrication time intervals and procedures. Flap track rollers have frequently been detected with flat spots worn on their exterior surfaces from sliding, due to operation when the internal bearings were frozen by corrosion or foreign debris. When inspected, some of these bearings were found full of lubricant. Apparently the lubricant was inserted after bearing seizure. All Boeing 747 flap bearings should be routinely inspected for freedom of movement during scheduled maintenance intervals. Aircraft washing can contribute to lubrication disparities due to strong detergents and high washing fluid pressures. Therefore, lubrication of flap bearings should be accomplished after each aircraft washing of the flap well area.

2. To improve the Boeing Model 747 aircraft wing flap reliability, it is recommended that maintenance inspectors review the operators' policies for flap washing versus lubrication. Flap lubrication time intervals in excess of the Boeing Company recommendations should be fully supported by bearing condition determined at regularly scheduled maintenance inspections.

27-19. McDONNELL DOUGLAS MODEL DC-9 AIRCRAFT - LOCKWIRE INSTALLATION FOR SPOILER CONTROL DRUM ASSEMBLIES.

An operator of a DC-9 model aircraft reported an incident where, after takeoff, the aircraft experienced a heavy left wing condition. A successful go around was accomplished. Subsequent inspection revealed that the safety wire used to secure the ball end of the cable on the left outboard spoiler control drum, P/N 3918885-501, *

had jammed against the cable guard pin. This condition restricted rotation of the spoiler control drum, thus causing the left outboard spoiler panel to remain extended.

* The Douglas Aircraft Company has issued an AOL No. 9-863 which covers this subject and includes a sketch depicting the correct lockwire installation. The DC-9 Maintenance Manual, Chapter 20-18-0, Figure 212, Page 218, illustrates typical lockwire safeties and also contains a precautionary note that must be adhered to whenever a safety or cable is replaced. *

It is recommended that principal maintenance inspectors continue to place emphasis on proper safetying techniques and ascertain that adequate instructions and training are provided to their assigned carriers maintenance personnel.

*27-20. BOEING MODEL 707/720 AIRCRAFT - RUDDER CABLE FAILURE. During flight, the rudder pedals became offset. The flight continued to destination and landed normally. Maintenance personnel found the left-hand rudder cable tension to be low, and while attempting to tighten the cable, it broke. Investigation disclosed a portion of a drilled rivet head imbedded in the cable groove of the rudder cable pulley where the cable changes from horizontal to vertical direction in the aft fuselage. It had severed the outer strands of the cable. This rudder cable was replaced at a Heavy Maintenance Check 1440 hours prior to this failure.

During the Heavy Maintenance Check, sheet metal repair work was accomplished on the vertical fin area. It is theorized that proper precautions to prevent the dispersal of filings during metal repairs were not employed and the procedures for cleanup were not followed. Inspectors should remind all operators of aircraft to use effective housekeeping practices when accomplishing metal repair work. *

27-21. FALCON MODEL 10 AIRCRAFT - HORIZONTAL STABILIZER TRIM RUNAWAY. The aircraft manufacturer has determined that foreign matter in the pilot's or copilot's longitudinal trim control switch can cause unwanted operation of the trim control system. This occurs when the normally-closed contacts of the switch are connected to a positive 28VDC autopilot or other optional service circuit. It has been found that minute quantities of foreign matter, which accumulate in the trim switch, can form an unwanted circuit between the pin of the normally-closed 28VDC circuit and the pin of the normally-open trim control circuit.

Falcon Model 10 aircraft delivered from the factory do not have the positive 28VDC potential on the normally-closed contacts of the longitudinal trim switch. The manufacturer recommends that all operators who have had autopilots or other optional equipment installed subsequent to delivery should check the polarity of the circuit in question and, if necessary, modify to remove the positive 28VDC from the normally-closed contacts.

Falcon 10 Service Newsflash No. 9, dated October 5, 1976, refers to this subject.

*27-22. FLIGHT CONTROL TRAVEL LIMIT STOP BOLTS.

a. During an accident investigation which involved an air taxi aircraft, an elevator stop bolt was found backed out beyond limits. In that position the stop bolt would have restricted elevator down travel.

b. Loosened or misadjusted flight control stop bolts could restrict movement of the affected flight control surfaces.

c. In a typical installation the stop bolt is threaded into an aluminum casting and secured by a lock nut torqued against the face of the casting. The length of the bolt should be at an adjustment with the lock nut properly torqued, that will limit flight control surface travel to allowable specifications. This design is common to many different aircraft.

d. Principal airworthiness inspectors are requested to bring this to the attention of their assigned operators and assure that they have procedures to periodically inspect flight control surface stop bolt installations for proper adjustment. The procedures should also be accomplished after any maintenance involving flight control surfaces including rigging. These actions can help prevent accidents and incidents involving aircraft flight control systems. *

27-23. FAIRCHILD HILLER FH-27 AND FH-227 SERIES AIRCRAFT - FLIGHT CONTROL SYSTEM CABLE INSPECTION.

An FH-227 operator recently found two cases of severed aileron control cables. One was outboard of the left engine and the other was outboard of the right engine on a different aircraft. A fleet campaign by the operator revealed seven additional aileron control cables frayed in three other aircraft.

As a result, principal maintenance inspectors (PMI) were to contact their assigned operators and request an inspection of their aircraft and PMI's were to conduct a review of the mainenance manuals for adequacy and detail. Investigations disclosed that several more aileron cables were either worn or had broken strands and pulleys and fairleads either badly grooved or cracked. In another case rudder cables were found worn. Inspection emphasis was placed at Wing Station 164 and Fuselage Station 407. In addition, in two cases, a review of the maintenance/inspection program revealed it to be inadequate in detail and frequency of inspections to properly discover flight control system discrepancies.

We are cognizant that many operators have conducted inspections; however, we are also aware that others have not. Therefore, it is requested that PMI's bring this to the attention of their assigned operators. Also PMI's should assure that the maintenance manuals contain adequate instructions and procedures as well as inspection frequencies to preclude incidents of this nature.

* 27-24. WING LEADING EDGE EROSION.

a. It has been brought to our attention that some DC-9 aircraft are experiencing wing leading edge erosion problems. The effects of wing surface roughness on aircraft flight characteristics have been addressed by the Douglas Company in the January/February 1980 Douglas Service Bulletin and in the Douglas DC Flight Approach Publications No. 32, dated January 1979, and No. 41, dated December 1982. The DC-9 maintenance manual and the DC-9 structure repair manual do not address the erosion problem.

b. The Aircraft Evaluation Group, ANM-270L, has been in contact with Douglas representatives concerning this subject. Douglas is in the process of evaluating the severity of the problem and determining what corrective action will be required to restore the wing leading edges to a smooth condition. Once the corrective actions have been determined, the DC-9 maintenance and structure repair manuals will be revised to reflect these instructions.

c. Until the DC-9 manual is revised, we recommend that principal maintenance inspectors advise their DC-9 operators experiencing wing leading edge erosion to contact McDonnell Douglas representatives who will assist them in determining the severity of the erosion and advise them of the necessary corrective action. *

* d. The erosion of aeronautical smoothness on wing leading edges is not limited to DC-9 aircraft. Boeing 707, 727, and 737 aircraft are experiencing similar problems. Boeing Service Letter, ATA 5100-00, dated April 23, 1983, entitled "Structures General Leading Edge Dents" pertains to this subject.

e. The above are examples of wing leading edge erosion. Principal maintenance inspectors, assigned to operators who operate aircraft with leading edge devices, should familiarize themselves with the appropriate section of the structural repair manual dealing with the limitation on damage to leading edges. *

APPENDIX 8. FUEL (ATA CODE 2800)

28-1. CENTER-POINT FUELING PRESSURE SURGES. During the fueling of a Boeing 720 aircraft, the lower skin on the number one reserve tank separated from the rib attachments and bulged downward. Fuel was not discharged from the tank vent at any time during the operation.

A thorough investigation was conducted to determine if the aircraft fueling system malfunctioned or whether the fueling pressure exceeded the aircraft limits of 50 p.s.i., with momentary surges allowed up to 75 p.s.i. The aircraft fueling system components were removed from the aircraft and checked, but no discrepancies were found. The fuel tank vent system was inspected, and it was determined that this system had not been obstructed in any way.

Further investigation was made to determine if excessive pressure surges were created by the fueler. It was found that fuel pressure at the aircraft fueling manifold did exceed 100 p.s.i. for periods of 3 to 4 seconds. This occurred when the main tank inlet valves closed at the fueling manifold with only the reserve tank inlet valve open and fuel flowing to that tank. The pressure surge was caused by the reduction in the outflow from the fuel manifold and was trapped by a check valve installed in the fueler discharge line downstream from the fueler pressure relief valve.

The check valve prevented the pressure surge from being relieved by the fueler pressure relief valve and caused fuel under high pressure to surge into the reserve tank. Apparently, this surge caused the damage to the tank structure in spite of the vent system, which is adequate under normal conditions. The check valve was removed from the fueler main discharge line, and the pressure remained within acceptable limits.

We recommend that all operators of aircraft with center-point fueling be informed of this incident. Inspectors should determine that fueling pressures do not exceed the manufacturers' limitations and that pressure relief valves in fueling equipment are installed in such a manner as to effectively control the discharge pressure.

28-2. HAZARD OF WATER CONTAMINATION IN FUEL STORED AND DISPERSED FROM FUEL TRUCKS. A large jet aircraft was refueled with water-contaminated fuel delivered from a 1956 model fuel truck, causing one engine to malfunction and another engine to stop operating entirely.

The incident occurred because:

a. Design of the fuel truck caused water to accumulate in a lengthwise trough above and surrounding the individual compartment filler necks. A leaky gasket in one of the necks allowed water to leak steadily into that tank compartment. Water also entered the compartment through vents located in the forward trough area.

b. The fuel truck was parked outside (after filling) permitting rain water to accumulate in the trough and submerge the filler necks and compartment vents located at the forward end of the trough. (Trough drains were at rear of trough.)

c. Malfunction of the automatic system in the fuel truck (designed to shut off the flow of fuel when excessive water accumulates in the filter sump) allowed delivery of water-contaminated fuel to the aircraft.

d. Water drains were not provided in the fuel truck for each tank compartment. The one water drain located in the filter sump did not indicate the presence of water before the refueling operation because the contaminated fuel had not yet reached the sump.

The fuel truck was provided with additional water drains in the trough to preclude water accumulation. New compartment filler neck gaskets were installed. Water drains were installed for each compartment and the defective automatic fuel shutoff device was repaired.

Inasmuch as these conditions could exist in other aircraft fuel trucks, we recommend that the incident be brought to the attention of an operator using this type refueling equipment.

28-3. TURBINE FUEL CONTAMINATION. Fuel contamination has always been a problem to a certain extent; but with the advent of jet-powered aircraft, it has become one of major proportions. The jet engine is much more critical of foreign material in the fuel than the reciprocating engine. The discovery of micro-organisms in jet aircraft fuel tanks has led many authorities to believe that they are contributing to, if not the primary cause of, fuel tank corrosion. A united, coordinated effort on the part of the Department of Defense, other government agencies, petroleum and airframe manufacturers has been launched in an effort to solve the problem of micro-organisms and other jet fuel contaminants.

This bulletin will make no effort to give a detailed technical description of all the contaminants involved. Our purpose is to pass on to inspectors certain information that will assist them in understanding the problems that will result from the use of contaminated fuel. It is recognized that many operators have comprehensive programs aimed at the elimination of fuel contamination; on the other hand, there may be some operators that have not initiated any action in this area. It is recommended that all inspectors familiarize themselves with the operator's program to determine if it is adequate.

The following are some suggestions which all operators should be urged to put into effect on a continuing basis:

a. Personnel training - All personnel involved in the handling of turbine fuel should be made aware of the importance of their jobs and the technical responsibility that rests with them in delivering "clear-bright" fuel to the aircraft.

b. Water-separator filter service records should be maintained. The filter elements should be changed when the pressure drop, at rated flow, reaches 80 percent of manufacturer's recommendation or annually, whichever comes first.

c. Second-stage filters should be changed at the time the first-stage filters are replaced.

d. Periodic inspection should be made of fuel storage tanks and refueling unit tanks. Inspection personnel should be alert to detect signs of scale, rust, or tank liner deterioration, if lined tanks are used.

e. Samples of fuel should be periodically taken and analyzed. This analysis should be a thorough laboratory analysis. There are several field fuel testing devices available at reasonable cost, and all operators should be urged to investigate these devices. It should be remembered that, even though visually a fuel may be "clear-bright", it can contain a very high level of entrained water, a natural breeding ground for micro-organisms. A visual inspection of fuel is not always conclusive.

f. Water-separator pressure gages should be periodically calibrated.

g. When aircraft have been defueled, the fuel should be carefully inspected and filtered before it is returned to a bulk storage facility. This will help prevent contamination of a clean storage facility and protect aircraft that are subsequently refueled.

All of the preceding information can be summarized in two words - Good Housekeeping. If good housekeeping practices are exercised by everyone involved in the handling of turbine fuel, the problems connected with contaminated fuel will be reduced to a minimum. This fact is the concensus of all the experts who have made a study of fuel contaminants, their cause and effect. No doubt most operators are aware of the problems related to contaminated fuel and are following the procedures outlined above. The preceding information is directed to those who may not be completely familiar with the dangers of contaminated fuel, or have been unable to obtain accurate information concerning its control, or have been lulled into thinking the problem is environmental and associated only with tropical and subtropical areas.

Every effort should be made to encourage all operators to initiate and maintain control precedures for the turbine fuel used in aircraft. As many operators have found, contaminated fuel can have expensive after-effects and can also, in extreme cases, affect the safety of the aircraft.

28-4. BOEING MODEL 747 AIRCRAFT - FUEL LINE COUPLING INSPECTION AND MODIFICATION. The following is quoted from Boeing Service Bulletin 747-73-2009 for your information and action as deemed appropriate.

"One operator has reported an engine fire which resulted in evacuation of passengers from the airplane. The fire was attributed to a fuel leak at the engine firewall where the fuel line is attached to the firewall by means of a quick disconnect fitting. Proper assembly of the fitting requires installation of a retainer wire for keying the nut to the inner shoulder of the fitting. Should the retainer wire not be installed in the nut, the inner fitting would not effect a complete seal even though the nut would appear to be properly installed.

"The retainer wire was missing from the firewall fitting on the engine experiencing the fire. In addition, a second operator has reported finding a firewall fitting with the retainer wire backed out of the nut approximately one-fourth inch."

"To ensure proper installation and assembly of the quick disconnect fitting at the engine firewall, the operator may perform a one-time visual inspection to verify installation of the retainer wire. Additionally, to preclude possible migration of the wire, the operator may rework the fitting nut by upsetting the lower edge of the hole thus creating a physical retainer trapping the wire in place.

"Notification of this modification is also detailed in Aeroquip Service Letter Number 144 and will also be included in Aeroquip Overhaul Manual ASB 81."

28-5. FUEL PRESSURE TRANSMITTER DAMAGE DURING DEFUELING - DOUGLAS DC-8 AIRCRAFT. During defueling operation of a DC-8, all four cockpit fuel pressure indicators went to the extreme maximum position and then stabilized slightly above normal, but within operating limits. At engine start, all the fuel pressure indicators were erratic, and it was necessary to replace all four fuel pressure transmitters to correct this condition. Inspection of the fuel system did not disclose any additional damage. An investigation could not determine the cause of this incident except to establish that the valves and pumps on the aircraft or the fuel truck were managed in an abnormal manner. Pressure surges of such magnitude would have been impossible if the procedures for defueling, contained in the operator's maintenance manual, had been followed.

The operator revised his maintenance manual by adding the instruction that all four fire shutoff levers are to be closed during defueling to protect the engine fuel pressure transmitter.

We recommend that details of this incident be furnished to all DC-8 operators for the information of those personnel concerned with defueling operations.

28-6. LOCKHEED 14 AND 18 SERIES AIRCRAFT - FUEL TANK AND ENGINE SELECTOR VALVE HANDLE RETAINING PIN FAILURE. Loss of the pin securing the fuel tank selector valve handle to the valve shaft was a primary factor in a fatal Lockheed model 18 aircraft accident. The loss of this pin prevented operation of the tank selector valve, and as a result, both engines experienced fuel starvation.

During original manufacture of these aircraft, both sides of the aluminum handles were swaged over the pins, and it is possible this type retention becomes inadequate in time. There is also a possibility that there are some Models 14 or 18 Lockheed aircraft in operation which have had the pins replaced by bolts.

To prevent a recurrence of this type, the subject handles should be carefully examined to determine their position is correct and the method by which they are retained (pin or bolt) is secure and locked. Defective handle assemblies should be repaired or replaced prior to further flight operation and the condition reported on FAA Form 8330-2.

28-7. BRITISH AIRCRAFT CORPORATION (BAC 1-11) - ROLLS ROYCE SPEY SERIES ENGINE. An operator experienced an engine ground fire due to the high-pressure fuel shutoff valve leaking internally.

a. Fire occurred in the area of the reverse thrust cascade vanes at the bottom of No. 1 engine during the start precedure. The engine was shut down and the engine-contained fire extinguisher was discharged but did not put out the fire. The fire was put out with a portable fire extinguisher.

b. The high-pressure fuel shutoff valve was defective and leaking internally. The fuel entered the engine prematurely even though the No. 1 start lever was closed. The excess fuel drained out through the combustion case drain tube.

c. The Rolls Royce Spey Engine starting procedures call for opening the start lever when the engine speed reaches 15% r.p.m. There should be no fuel in the engine prior to this time. Since the high-pressure fuel shutoff valve was leaking internally, fuel was discharged into the engine prior to reaching 15% r.p.m. Therefore, the engine probably torched during the start due to the excess amount of fuel present for the amount of air flowing through it. The torching provided the ignition source for the fuel leaking at the combustion case drain and subsequently down to what had already spilled on the ground. The high-pressure fuel shutoff valve and the combustion case drain tube were replaced, and the engine operated normally.

d. Air carrier and general aviation operators of Rolls Royce Spey series jet engines should be alerted to this occurrence.

28-8. FIRE PREVENTION DURING FUEL TANK DEFUELING, PURGING, AND REPAIR OPERATIONS. A jet transport was extensively damaged by fire during a fuel tank purging operation. The CO_2 being used as a purging agent was discharged into the fuel tank through an open access door. Investigation revealed that static electricity had been generated by the CO_2 passing through a plastic nozzle. This charge caused a spark, resulting in the ignition of the residual jet fuel vapors still present in and around the open tank.

Another incident occurred when a combustion heater type ground unit was being used to purge an open auxiliary fuel tank. An explosion resulted in an uncontrollable fire and destruction of a jet transport aircraft.

The following instructions should be adhered to in an effort to preclude another disastrous fire.

a. Remove ALL electrical power from the aircraft being purged.

b. Ensure that the aircraft and all equipment in the vicinity of the fuel tanks are properly grounded.

c. Rope off the airplane and clearly post signs which have printed on both sides: "DANGER - OPEN FUEL TANKS."

d. Utilize only GROUNDED METAL DISCHARGE NOZZLES during inerting or purging operations.

e. Ensure that personnel working in the vicinity of open fuel tanks refrain from doing anything that would cause a spark.

f. Wear cotton overalls with nonsparking zippers or buttons when inside the fuel cell. In addition, the entire purging crew should wear cotton clothing.

g. Follow the purging procedures pertaining to that specific aircraft as set forth in the company manual or the Manufacturer's Maintenance Manual.

h. Do not use electrical testing equipment (which can produce sparks) inside fuel cells. Use only air-driven power tools and explosion proof lighting when inside the tank.

i. Do not use combustion heater type ground equipment for purging aircraft fuel tanks because the combustion unit could be an ignition source for residual fuel vapors.

j. Flexible ducting used to transmit air under pressure into fuel tanks for purging purposes should be constructed of cotton or other materials proven incapable of inducing or transmitting static electrical charges.

28-9 AIRCRAFT FUEL FEEDLINE SHROUD DRAINS. An operator of a B-727 aircraft encountered fuel leaks in the wheel well from the shroud drains of the tank to engine fuel feedline. The leaks apparently occurred due to water standing in the shroud, causing the steel braid of the stratoflex line, Boeing P/N 10/60536/1, to rust out, followed by a rupture of the feedline when pressurized. It has been reported that this situation is most prevalent on aircraft with five or more years in service.

Inasmuch as other model/type aircraft may have fuel feedline shrouds, principal inspectors should encourage their assigned operators to conduct periodic inspections to check for obstructions in the shroud drain lines and pressurize the fuel feed system to check for leaks. Additionally, the fuel feedline shrouds should be opened up periodically and checked for standing water marks. It is also recommended that principal inspectors assure that the maintenance manuals contain adequate procedures to preclude incidents of this nature.

*28-10 DC-8 FUEL DUMP CHUTE CABLES. A DC-8 crew was recently required to declare an emergency and make an unscheduled landing because of a sudden unexplained loss of fuel.

Subsequent investigation revealed both dump chutes had extended. The dump chute "up" cable was found rusted and broken at fuselage station 35 and the chute "down" cable was rusted at the same station. These cables are located in the under floor area of the forward lavatories.

Many of this type aircraft are achieving high total times and are being used in diverse operations, i.e., livestock carriage, etc. Principal inspectors should determine that their assigned operators' inspection programs adequately cover under lavatory and floor areas with particular emphasis on cable runs and airframe structure. *

28-11. DC-8/DC-9 AIRCRAFT, INSPECTION OF FUEL TANK ELECTRICAL CONDUIT ASSEMBLY.

a. There have been some DC-8 incidents/explosions reported while the aircraft was out of service for fuel system maintenance. Some occurred when electrical power was applied for the purpose of troubleshooting fuel pumps, electrical connectors, etc. One operator has found damage/overheat of the fuel pump receptacle and mating conduit assembly connector socket during troubleshooting/replacement of fuel pumps. The operator has initiated a comprehensive inspection and maintenance program to ensure that the conduit assembly is serviceable.

b. McDonnell Douglas has issued two All Operators Letters (AOLs) on the fuel pump connector problem in conjunction with maintenance manual instructions. It must be noted that these AOLs speak to both DC-8/9 aircraft since the systems are similar and have the same problem.

c. AOL 8-782 (DC-8)/9-994 (DC-9) provides instructions on circuit breaker popping condition and replacement of the connector assemblies. AOL 8-758 (DC-8)/9-937 (DC-9) emphasizes the need for inspecting/replacing the fuel tank pump receptacle and mating conduit assembly connectors as an assembly to ensure satisfactory operation of the fuel pumps. The maintenance manuals provide cautions and procedures to be followed when maintenance is performed on the fuel tank systems.

d. It is recommended that the assigned inspectors assure that their operators have a comprehensive program which includes inspection of the fuel tank pump receptacle and mating conduit assembly connectors, with emphasis on complying with manufacturers' instructions and safety precautions.

28-12. USE OF FUEL ADDITIVE BIOBOR JF FOR FUNGICIDE CONTROL (BIOCIDE TREATMENT).

a. An air carrier experienced contamination of the fuel quantity indicating system probes which resulted in erratic fuel quantity indication. Investigation revealed that the probes were contaminated by improper blending of U.S. Borax additive BIOBOR JF with jet fuel.

b. BIOBOR JF is a fungicide that is used to prevent/control fungal growth in aircraft fuel tanks. Under certain conditions (high concentrations of BIOBOR JF in proportion to fuel) BIOBOR JF will hydrolyze in fuel-water solutions to form solid crystalline products. Fuel tanks should be sumped in accordance with the aircraft manufacturers' manual prior to adding BIOBOR JF to ensure excess water is not present in the tanks. In the presence of excess water, either through direct dilution of BIOBOR JF with water or by adding the concentrate to fuel tank sump areas with water present (sometimes referred to as wet fuel), the formation of solids may occur. The incorrect use of BIOBOR JF additive can result in erratic fuel quantity indications, tank sealant problems along with the creation of solids which could contaminate the fuel lines and filters.

c. The manufacturer recommends the use of a metering system to add BIOBOR JF to the fuel rather than batch-blending or over-the-wing addition. If batch-blending is used, precautions should be observed to ensure satisfactory dispersion of the additive to avoid high areas of BIOBOR JF concentration.

d. U.S. Borax and Chemical Corporation Service Bulletin No. 978, "BIOBOR JF Fuel Fungicide Service Information for Aircraft Use," provides detailed instructions on the correct methods of using BIOBOR JF to prevent solid formations. Copies may be obtained by writing to the U.S. Borax and Chemical Corporation, Attention: Technical Service Department, 3075 Wilshire Boulevard, Los Angeles, California 90010.

e. It is recommended that the assigned inspectors alert their operators of a potential hazard and encourage them to comply with the instructions in the service bulletin.

*28-13. PRATT & WHITNEY MODEL JT9D ENGINE - FUEL CONTROL OUTLET TUBE FLEXIBLE FITTING. There have been two recent incidents of inflight fires caused by improper assembly of the flexible fitting on the fuel control outlet tube assembly.

This type fitting, which has been used on Pratt & Whitney Aircraft engines since 1958, has been virtually trouble free but in this one location, it is frequently disassembled in order to replace fuel pumps and this greater exposure to possible misassembly has apparently resulted in one or more of the following improper procedures:

a. The Lock, P/N 366242 or P/N 704090, is not crimped into the slots in the Nut, P/N 366241, but is crimped around the flange on the end of the nut. This condition can permit the nut to back off, allowing the joint to separate.

b. The Lock, P/N 366242 or P/N 704090, is crimped at the slot in the Nut, P/N 366241, but is not actually in the slot. This condition will also permit the nut to back off.

c. The Nut, P/N 366241, is tightened and locked in the tight position. This will restrict the flexibility of the joint, thus defeating its purpose. Correct assembly procedure, as specified in the Pratt & Whitney Aircraft Standard Practices Manual, is to hand tighten the Nut, P/N 366241, then loosen it one half turn and lock it by crimping the P/N 366242 or P/N 704090 Lock into the slots.

It is recommended that the assigned FAA inspector discuss this matter with affected operators and encourage earliest possible compliance with the inspection provisions of Pratt & Whitney Aircraft Alert Service Bulletin No. 4967 dated January 4, 1979. *

28-14. L-1011 SQUARE SWITCHLIGHT GUARDS FOR ENGINE FUEL TANK VALVES.

a. One operator experienced an engine flameout on each of two aircraft while in flight due to the inadvertent closing of the engine fuel tank valve.

b. Investigation of the incidents revealed that the plastic transparent switchlight guard when improperly installed can result in the switchlight guard flange being positioned so that it rests against the lens of the square switchlight. When this condition exists, applied pressure on the switchlight guard flange causes square switchlight activation and resultant closing of the engine fuel tank valve.

c. Lockheed has issued Service Information Letter (SIL) No. 20-5 dated July 8, 1975, which concerns these square switchlights and additional types of square switchlights located in the flight station. The purpose of the SIL is to amplify on and present, in greater detail, information in the L-1011 Maintenance Manual on installing the spring-loaded, plastic guard on square switchlights in the flight station. The SIL also advises operators of availability of alternate guards.

d. Principal airworthiness inspectors with L-1011 responsibility should assure that their assigned operators are made aware of this information.

*28-15. McDONNELL DOUGLAS DC-10 SERIES AIRCRAFT - ERRONEOUS FUEL QUANTITY INDICATIONS.

a. Several engine flameouts and near flameouts have occurred involving DC-10 aircraft caused by erroneous fuel quantity indications.

b. Investigation of one incident involving the flameout of number 2 engine determined that the fuel quantity indicator had been replaced with a unit designed for a number 1 or number 3 position. These indicators operate with different fuel tank probe capacities than the number 2 indicator and if installed in the number 2 position could indicate as much as 22,000 pounds with the respective fuel tank empty.

c. Another incident involved flameout of the number 2 engine on an aircraft that had sustained lightning strikes 2 days earlier. Investigation revealed that the number 1 and number 2 fuel quantity indicators both read higher than the amount of fuel contained in the respective fuel tanks; a condition that is detectable using the indicator built-in test equipment (BITE).

d. Investigation of a near flameout revealed that the electrical harnesses for number 1 and number 3 fuel quantity indicators were reversed. During fuel transfer to correct what was thought to be an unbalanced condition, the number 1 engine nearly flamed out. *

e. Recommendations.

(1) Fuel quantity indicators should be conspicuously marked to ensure installation in the proper position.

(2) Verify that personnel involved in the maintenance of fuel quantity systems are properly trained.

(3) Fuel quantity indicators should be checked for operation and accuracy anytime an aircraft receives a lightning strike.

(4) Operators should have adequate procedures for checking fuel quantity systems for operation and accuracy.

(5) Operator fueling procedures should include a method for cross checking and verifying the amount of fuel onboard and the amount of fuel added using fuel level sticks if necessary.

f. Principal airworthiness inspectors with DC-10 responsibility are requested to bring this to the attention of their assigned operators and encourage them to include these recommendations in their maintenance/inspection program if not already incorporated. Special emphasis should be placed on manual material regarding fuel level stick procedures and their use during the inspectors' day-to-day inspection of fueling activities.

* 28-16. FAA APPROVED AIRPLANE FLIGHT MANUAL (AFM) REQUIREMENTS REGARDING FOREIGN PURCHASED AIRCRAFT AND FUEL SYSTEM INDICATORS THAT READ IN METRIC UNITS.

a. It has come to our attention that some U.S. manufactured aircraft, operated under foreign registry and subsequently purchased by U.S. operators, have been U.S. registered and certificates of airworthiness issued even though the fuel quantity gauges read in metric units. The AFM for these aircraft requires fuel computations to be in pounds. Therefore, the fuel quantity gauges and associated fuel system indicators must also read in pounds.

b. FAR Section 21.183 states, in part, that an operator is entitled to a certificate of airworthiness provided the aircraft conforms to a type design approved under a type certificate. FAR Parts 23, 25, and CAR 4b require an FAA approved AFM as part of the type design.

c. There are two options available for operators to comply with the pertinent regulations.

(1) Modify the aircraft with approved installations that conform to the type design and the FAA approved AFM.

(2) Develop and obtain approval, or a revision, or a supplement to the AFM which contains performance and limitations information in metric units.

d. Operators that undertake the second option should be advised that training is required for flightcrew, dispatcher, and ground personnel. The required training should include a differences course as well as recurrent training in the use of metric units. *

* e. Principal inspectors are requested to bring this to the attention of their assigned operators to assure that their aircraft are in compliance with the FAA approved AFM.

f. Inspectors are requested to place emphasis on this subject during their normal day-to-day surveillance activities. If discrepancies are noted, principal inspectors with certificate responsibility shall be immediately notified for corrective action. *

APPENDIX 9. HYDRAULIC POWER (ATA CODE 2900)

29-1. BOEING B-727 SERIES AIRCRAFT - LOSS OF SYSTEM "A" HYDRAULIC FLUID. During a training flight on a B-727 aircraft, a complete loss of system "A" hydraulic fluid was experienced due to a check valve failure in the "A" system module in the ventral stair area.

a. After the aircraft was parked, the rear bulkhead door was opened and extremely toxic fumes from vaporized Skydrol entered the cabin. The captain reported that if the door had not been reclosed immediately, he would have passed out before he could have left the rear cabin area. Ventilation with external fans for forty-five minutes was required before maintenance personnel could work in the ventral stair area.

b. The operator issued an alert notice to B-727 flight crews recommending that in any hydraulic system failure where fluid loss has occurred, or is suspected, all passengers and crews deplane through the forward door and stewardesses be advised not to open the rear bulkhead door. The ventral stair should be opened from the outside to prevent the toxic fumes from entering the cabin area and to provide ventilation before maintenance personnel enter the ventral area.

c. It is recommended that this information be furnished to all B-727 aircraft operators for action as necessary.

*29-2. JET TRANSPORT HYDRAULIC SYSTEMS - INTERNAL LEAKAGE. During the first years of jet transport operation, it was common practice to maintain the integrity of the hydraulic systems by periodic removal and replacement of the various hydraulic components. The components were then routed to the shop where they were tested, disassembled and reworked to various degrees depending on the particular operators maintenance program.

During recent years it has been common practice to maintain hydraulic system components by "reliability" programs. Some of these programs monitor failures and/or removal rates, and the units are removed from the aircraft when the appropriate indicators within the reliability system so dictate. Other reliability systems provide for a leakage test of the system which is performed at some regular periodic interval. This method consists of installing a flow meter in the hydraulic system or installing an ammeter in the motor circuit that drives the hydraulic pump. The hydraulic system and individual units are then operated and readings taken to determine the internal leakage of the system units. *

* Due to the general reliability of the hydraulic system components, the interval between the check periods has continued to increase over the years.

Several instances have occurred recently which have brought to our attention the fact that the internal leakage of certain hydraulic units has been allowed to reach rates that are unacceptable. As a result of this increase in internal leakage, the electric motor driven pumps are being called upon to deliver higher flows which in turn require higher electrical current drain for sustained operation. The increase in current drain produces more heat, in addition to heat produced in internal leakage, and results in increased heat that must be absorbed by the hydraulic system.

Recently a one-time inspection on one model aircraft revealed that several aircraft hydraulic systems had been operating unknowingly with pressure regulating valves and pressure relief valves that exhibited excessive internal leakage.

It is, therefore, requested that each Principal Inspector perform a detailed review of the maintenance program being utilized by his assigned operator to assure that the type of program and the frequency of checks are adequate to detect internal leakage of hydraulic components before the leakage rates become excessive.

Most of the manufacturers maintenance manuals contain permissible leakage limits or they can be obtained upon inquiry. *

APPENDIX 10. ICE AND RAIN PROTECTION (ATA CODE 3000)

30-1. DAMAGE TO ENGINE FAN BLADES. There have been nine instances in which foreign objects have broken pieces from the tips of fan blades of engines installed on wide bodied jets. In six of these instances pieces penetrated the cowling and in one instance a fuel line was punctured resulting in an engine fire. Considerable secondary damage has also been caused by the broken pieces which further degrades the engine's performance.

The damage to blades in the center position engine of a three engine aircraft, has been attributed to ice accumulation in the inlet duct while the aircraft is parked. However, ice injestion can result in damage to engines installed in any position.

Research indicates the ice injestion damage was primarily confined to the General Electric CF/6 engine installed in the center position of DC/10 aircraft. However, the same damage can result in any turbine engine with large area inlet ducts when the aircraft has been exposed to climatic conditions that are conducive to water accumulation with subsequent exposure to freezing temperatures.

Prior to the onset of winter operations, Principal Inspectors assigned to operators of wide bodied aircraft should assure that the operator has incorporated procedures in his maintenance program, whereby the inlet ducts of the engines will be inspected for, and removal of, any ice that may be accumulated in the duct.

* 30-2. FALCON MODEL 10 AIRCRAFT - SLAT ANTI-ICING HOSE. An incident occurred when all directional information was lost to the number one instrument system and switching to the secondary system was required to restore directional information.

Investigation revealed that the left wing outboard slat anti-icing hose uncoupled from the slat at wing zone 540 as the result of a loose hose clamp. High temperature engine bleed air discharged into the forward wing area melting the flux gate transmitter wiring insulation and short circuited the a.c. power. The short circuit burned the directional gyro transformer and tripped the No. 1 a.c. circuit breaker.

Uncoupling of the hose clamp may be prevented by positioning the clamp so that it is not on the coupling bead and by verifying its tightness. The manufacturer's maintenance manual, Chapter 30-10-01, Pages 602 and 603, graphically describes the correct way for installing these clamps. *

APPENDIX 11. INSTRUMENTS (ATA CODE 3100)

31-1. FLIGHT RECORDER MAINTENANCE. There have been several instances during accident investigations when it was difficult or impossible to obtain useful information from flight recorder tapes. Barring mechanical destruction, the reason for the difficulty was evidenced by one or more of the following:

Unusual excursions of recorded aircraft heading or airspeed.
Tape Stoppage.
Missing tape traces.
Erratic time references and missing reference lines on tape.
Erratic tape speeds.
Inaccurate calibration charts.
Insufficient number of calibration points.

The first five items usually indicate faulty operation of the flight recorder, and the last two items show improper or inadequate calibration procedures.

a. Maintenance Practices. Tapes designed for reuse should not be used more than once for each side. Care should be taken when replacing recording tape to preclude damaging either the tape or the recording styluses. The following recommendations should be considered in the carriers' maintenance program to increase equipment reliability and make the recorded data more useful:

(1) Air carriers should comply with manufacturer's service bulletins which contribute to equipment improvements in accuracy and/or reliability.

(2) All operators should establish periodic inspections of flight recorder tapes to ascertain that required parameters are being recorded. The inspection should include a spot check of the accuracy of the recorded data. The results of these inspections, as well as the computed mean time between replacements (MTBR - i.e., premature removals) should be used to determine the periodic maintenance and overhaul times of recorders. As a minimum, inspectors should encourage their assigned operators to perform a trace inspection of the FDR magazine between 75 to 125 hours of aircraft operating time or more often if they so prefer.

(3) Great care should be used in the calibration of flight recorders and the calibration data should be accurately recorded. Tapes should not be scribed or written on; this practice may stretch the tape and distort the trace. The number of data points recommended in the manufacturer's manuals should be considered the minimum necessary for an acceptable calibration.

(4) Calibration data alone will not provide the accuracy required by the transcribing facilities; therefore, the tape sample actually used for flight recorder calibration should be filed and made available to the appropriate authority when a tape readout is required.

b. Inspectors should review flight recorder maintenance programs and encourage all operators to adopt the above recommendations. The Avionics Branch, AFS-350, should be informed of difficulties encountered with operators not willing to conduct the inspections.

*31-2. KOLLSMAN SENSITIVE ALTIMETER BALANCE ARM FAILURES. For some time we have been receiving quite a few failure reports advising of failures of Kollsman sensitive altimeter balance arms. Some of these have been returned to the manufacturer for evaluation. The manufacturer has found that the arms had been damaged by the use of improper tools for preload adjustment. In some instances, the anchor post of the balance assembly gave evidence of marks caused by the use of common pliers to turn the post when applying load to the spring assembly.

Failed parts and the Kollsman Bulletin (Service Bulletin No. 256 dated October 25, 1973) indicate improper maintenance procedures and the use of improper tools by some persons who maintain or repair altimeters. In the case of FAA approved repair stations, Part 145 requires that they have available the appropriate manufacturer's service information and in the case of tools, the type recommended by the manufacturer or an equivalent tool.

We recommend that this subject be discussed with persons in your district who are engaged in the maintenance of Kollsman altimeters. *

*31-3. UNAPPROVED ALTIMETERS. During base inspections of FAR Part 135 operators, Flight Standards inspectors have found unapproved altimeters installed in aircraft. These altimeters have been provided to operators or installers with no serviceable tags, maintenance releases, or approvals of any type.

The following are representative of the data supplied with or appearing on the case of these altimeters:

1. Questionable altimeter nameplates, of the foil pressure stick-on type, which give a name of an instrument company or supplier.

2. A white decal (approximately 3/4" X 2") affixed to the altimeter containing the following information:

   "Meets Part 43 Appendix E
   Max Alt. Tested_____to_____feet
   Date_____."

   Most of the above decals indicate -1,000 to +20,000 feet, but some are blank.

3. "Altimeter correction" card indicating scale error, S/N, date and inspection by _____ (two initials). Some of the dates have been changed or written over.

Since these altimeters may not meet the requirements of FAR Part 135.143(b), Flight Standards inspectors should assure that operators in their districts be made aware of these unapproved altimeters. It is also recommended that the usage of unapproved items be discussed with all repair facilities.

Reference: FAR 135.143(b)
FAR 43.13(b)
FAR 23.1301
AC 20-62B *

31-4. DUKANE UNDERWATER LOCATOR BEACON MODEL N15F210B.

a. The Dukane Underwater Locator Beacon Model N15F210B is fastened to flight recorders which are used on numerous aircraft. It has been brought to our attention that it is possible to install the Dukane Battery P/N 810-418 with incorrect polarity which can permanently damage the beacon by causing excessive capacitor leakage. When the beacon is damaged in this manner, it is rendered inoperative by early battery depletion.

b. Dukane has issued Service Bulletin No. 210B-1-7 dated September 15, 1977, including Amendment 210B-1-7/A dated October 21, 1977, and Service Information Letter No. DK77-1 which prescribe off-current test procedures and information concerning modification of the beacon battery.

c. It is suggested that Avionics Inspectors make users of the Dukane Model N15F210B Underwater Locator Beacon aware of this information and recommend that the test procedures prescribed in Service Information Letter No. DK77-1 be performed at the next scheduled battery change.

d. Copies of the above publications or additional information can be obtained from:

Dukane Corporation
Ultrasonic Division
2900 Dukane Drive
St. Charles, Illinois 60174
(312) 584-2300
Telex: 72-0426

*31-5. NON-TECHNICAL STANDARD ORDER (TSO) INSTRUMENTS AND AVIONICS EQUIPMENT.

a. Inquiries received from district offices have concerned non-TSO'd instruments and avionics equipment acquiring approval status when being installed in airplanes subject to operation under Federal Aviation Regulations (FAR) 121, 123, and 135.

b. FAR Section 21.305 states, in part, that whenever an appliance is required to be approved it may be approved under a Technical Standard Order; in conjunction with type certification procedures; or in any other manner approved by the Administrator.

c. As indicated in FAR Section 21.305, approval is not limited to only TSO'd instruments and avionics equipment. It is the responsibility of the avionics inspector to determine that both TSO'd and non-TSO'd instruments and avionics equipment, after being installed in aircraft, are capable of performing their intended function in the environment they will be subjected to and do not affect the airworthiness of the aircraft. *

APPENDIX 12. LANDING GEAR (ATA CODE 3200)

32-1. HIGH-TENSILE STRENGTH STEEL USED IN LANDING GEARS. Many modern-day aircraft utilize high-tensile strength steel in the main and nose landing gear assemblies as well as in other areas. One steel utilized is 4340, which is heat-treated to a tensil strength rating of 260,000 to 280,000 p.s.i. Another steel, 300-M, which is used in the Boeing 720 truck beam, is heat-treated to a tensil strength of 270,000 to 300,000 p.s.i. These steels are referred to by those who work with them as "exotic steel" and are relatively new to the aviation industry. They do not break or bend in the manner of the better known or more conventional grades of steel. Special handling is required due to their sensitivity to surface damage which may result in abrupt total fracture.

In view of the failures which have occurred, it is proper to reemphasize the necessity of following certain precautions and recommendations concerning the inspection, repair, and handling of landing gears made of these steels.

a. Avoid causing any nicks, gouges, scratches, and sharp indentations. Defects of this nature create localized stress concentrations that can result in cracks or total failure. For example, Airworthiness Directive 62-17-2 prohibits repairs to these defects on B-707 and B-720 truck beams and requires replacement of the beams if the depth of the defect exceeds 0.005 of an inch.

b. It is important that clamps, brackets, or other attachments be properly positioned. Improper installation can result in chafing which, in turn, could result in failure.

c. Special repair instructions apply to these steels since machining and grinding operations cause extremely critical temperatures. Most airframe manufacturers have very specific instructions covering repair of landing gear components; they must be scrupulously followed.

d. Whenever the paint or cadmium plating is stripped from any portion of the surface, the bare steel should immediately be protected from the atmosphere. Preservative oil coatings are adequate for short periods of storage while awaiting replating or repairing.

e. Repair of any damage to the paint or cadmium plating should be accomplished as soon as possible.

f. Special instructions also apply to cleaning and the use of solvents.

g. Care is necessary to prevent overlooking small magnaflux or magnaflow indications. Questionable indications should be thoroughly investigated, and the use of nondestructive testing and inspection equipment should be encouraged at every opportunity.

h. All lubricated surfaces should be protected with the prescribed lubricant at all times to prevent corrosion as well as to prevent damage from excessive friction.

i. All assigned inspectors should become familiar with all manufacturers' service bulletins or related material pertaining to the inspection, repair, or modification and handling of the landing gears and related components. All operators should be urged and encouraged to incorporate any changes that will improve the reliability and airworthiness of the landing gear assembly.

32-2. MAINTENANCE OF AIRCRAFT LANDING GEAR SYSTEMS. The landing gear system continues to experience the highest number of incidents reported through the Mechanical Reliability Reporting system. A significant number of these malfunctions can be attributed to improper or lack of maintenance. The following examples illustrate some of the needless causes.

Upon landing, the right main landing gear of a C-46 folded. The main contributing factors of this malfunction were a false gear indication and failure of a landing gear bushing. Investigation revealed a burred microswitch key on the right gear which caused the down switch to be stuck in the locked or closed position. This resulted in a safe indication even though the right gear was not down and locked because of an excessively worn and cracked bushing in the outboard side brace. Metallurgical examination revealed the bushing did not meet the applicable specification with respect to metal composition and hardness. The bushing was manufactured from a cast rather than a wrought material.

During investigation of a Fairchild F-27 aircraft landing gear malfunction, removal of the nose gear revealed the left trunnion grease fitting was not delivering grease to the trunnion bushing. An accumulation of foreign material had plugged the fitting.

A serious incident occurred in flight which necessitated the rupture of hydraulic lines in order to relieve pressure so the landing gear could be extended on a CV-440 aircraft. Investigation revealed an improper retaining ring was installed in the hydraulic bypass valve. Excessive end gap in the ring allowed a dowel pin to fall out of the valve rotor assembly, locking the bypass valve in the pressure position. The pin then passed through the system and lodged in the landing gear selector valve. The valve was jammed and the valve shaft sheared when the landing gear lever was placed in the down position.

In another instance, involving an F-27 aircraft, the gear safety pins were not removed. On retraction, the right main and nosegear pins held, but the left main gear pin flew out into the nacelle. This caused considerable damage to the collector fuel tank and boost pump fuel line and bent the landing gear actuating strut eyebolt approximately 45 degrees.

When the gear failed to retract on a DC-6, maintenance personnel found the main landing gear-up lines capped off. The lines had been disconnected and capped the previous night in order to perform a retraction test on the nosegear only, and the lines were not reconnected following the test.

Human errors may never be eliminated, but they can be minimized. Mechanically induced failures have involved malfunctions of warning systems, inoperative limit and safety switches, uplocks that fail to release, and downlocks that fail to engage. Many of these difficulties were found to be the result of improper rigging and adjustment. Lack of lubrication and dirty components (switches, valves, and latches) have also caused false light indication or stopped retraction or extension cycles before the gear is completely up or down. We believe a substantial improvement in the reliability of the landing gear system can be made through frequent and exacting maintenance. All operators are urged to incorporate any manufacturer's service bulletin or related material pertaining to the inspection, repair, or modification and handling of the landing gear and related components that will improve the reliability and airworthiness of the landing gear system.

These problems outlined were corrected when they were experienced. However, the number and frequency of landing gear malfunctions and failures suggests that all landing gear problems be carefully analyzed to determine whether design is a probable cause, or whether improved maintenance procedures are necessary to improve the reliability of the system. We recommend that assigned inspectors:

a. Review the operator's maintenance and inspection programs and determine that adequate procedures are provided to properly maintain the landing gear system.

b. Evaluate parts replacement and overhaul time limitations and determine that life limitations are not being exceeded and make adjustments as necessary.

c. Where design changes are needed, forward recommendations with substantiating data to the controlling region.

* 32-3. AVIATION TIRE MAINTENANCE PRACTICES. As a result of a recent indepth study of aviation tires, it has been determined that there are certain significant problems occurring all too frequently which can be attributed to maintenance and operational practices.

Although this subject is not new and the aviation community is already aware of the nature and extent of these problems, tire failures continue to plague the industry and, as a result, tires tend to provide less service than they are capable of. Some operators, through diligent efforts, have been able to minimize their tire problems and it is felt that, by this same effort, the entire industry could substantially reduce incidents that result from tire failures.

The following factors are considered to play an extremely important role in a sound program designed to increase tire safety, reliability and longevity:

a. Frequent tire pressure checks should be made using a high quality calibrated instrument. A daily check is preferable when feasible. However, consideration must be given to operating schedules. Industry experts concur unanimously that under and/or overinflation are one of the primary causes of early tire deterioration or failure. Underinflation, in particular, will create high tire operating temperatures which can result in sidewall breakdown, tread separation and blowouts. Overinflation causes premature wear of the tread center area and makes the tire more susceptible to foreign object damage. Operators should be encouraged to check tire pressures as often as possible.

b. Airport ramps, taxiways and runways should receive regular and thorough cleaning. Foreign object damage (FOD) is generally considered to be another primary cause of tire failure. Industry experts concur that certain types of FOD can and will ultimately lead to a failure or scrapping of an otherwise good tire carcass.

c. The use of nitrogen as an inflation medium should be encouraged. It is considered to be a possible deterrent to internal tire combustion, tire explosions and wheel corrosion. It should be recognized that the use of nitrogen may present significant logistic problems particularly for flag carriers and off-route charters.

d. Tires subjected to overdeflection due to a mate failure or failure of two tires on a 4-wheel bogey should be changed. There are differences of opinion as to the disposition of the surviving tire(s) but, at a minimum, they should be highlighted as having been subjected to overdeflection and then be returned to the retread agency for a special, detailed inspection. Some factions in the *

* tire industry recommend automatic disposal of such tires as they contend an early failure is predictable. Operators should be encouraged to provide the retread or testing agencies with data pertinent to the reason for tire removal.

e. Aircraft movement on ramps and taxiways, during both taxiing and towing operations, should be limited to large radius turns to prevent scrubbing and overdeflection. Manufacturers recommendations pertaining to such operations should be observed.

f. Tire inspection procedures should be strictly adhered to by both maintenance and flightcrews. Operators should review their programs and service histories to determine if there is a need for developing more stringent requirements.

It is suggested that principal inspectors provide this information to their assigned carriers and encourage development of a favorable attitude toward the need for total compliance and adherence to tire maintenance programs. It is also recommended that principal inspectors provide increased surveillance of their assigned operators' tire maintenance/inspection procedures for compliance with approved programs. *

32-4. LANDING GEAR WHEEL RETAINER NUTS. Several incidents have occurred that were caused by loss of a landing gear wheel. In many cases, the failures were attributed to improper torquing of the wheel retainer nut. The outer wheel bearing failed resulting in wheel misalignment and high buildup of frictional heat due to the brake assemblies cutting into the wheel. This type of failure can result in retraction of a hot landing gear in the wheel well providing a source for a serious fire. Sparks and a proper combination of wheel-well vapors could generate an explosion.

In other cases, several failures of the AN7502 retainer nut, approved for Convair 340/440 series aircraft as a landing gear wheel retaining nut, have occurred. The failures appear to be caused by excessive thread wear in the nut, by combined thread wear between the nut and the axle, or by improper assembly techniques. A new type nut, the Military Standard (MS) 21025, is of higher strength and is available as a replacement for the AN7502 nut.

In view of the seriousness of incidents of this nature, it is recommended that this information be brought to the attention of all operators for action as necessary.

32-5. BOEING 727 - LANDING GEAR WHEEL FAILURES. During taxi after landing the outer rim of the No. 4 wheel separated from the center section of the wheel on a Boeing 727. The failure was caused by a fatigue fracture that had two origins in small areas of corrosion damage.

B.F. Goodrich Service Bulletin No. 240, issued October 30, 1964, recommends that all Goodrich wheels used on the Boeing 727 aircraft be inspected for corrosion and painted at the next tire change. The bulletin identifies the critical areas to be inspected. In the case of the above failure, the wheel had not been painted and failed in an area two inches inboard of the rim. Since the subject failure was outside the recommended inspection area, all areas should be examined for evidence of corrosion prior to painting.

Assigned inspectors should check the B-727 wheel inspection procedures to determine compliance with B.F. Goodrich Service Bulletin No. 240.

32-6. FAIRCHILD HILLER F-27 AND FH-227 SERIES AIRCRAFT - MAIN LANDING GEAR ACTUATOR. Some service difficulties involving component parts of the main landing gear actuator installed on F-27 series aircraft have occurred due to the following discrepancies:

a. The rod end (eye bolt) was broken in the threaded area at the jam nut. An initial evaluation of the failed part indicated the break may have resulted from an imperfection during manufacture.

b. A failure of the piston assembly occurred when the brazed connection that joins the actuator piston rod to the piston head separated due to shear forces.

c. Cracks were found in the actuator cap. These cracks started at the locking slots and extended approximately 1/4 inch into the cap.

It is suggested the controlling region be notified of any discrepancies concerning the main landing gear actuator assembly and that assigned inspectors ensure that operators of the F-27 aircraft receive the above information.

32-7. FAIRCHILD HILLER MODEL F-27 AIRCRAFT - LANDING GEAR. The piston rod attachment pin has a history of failure due to shearing under operational loads. As early as November 1965, the manufacturer recommended that it be replaced with a larger diameter pin.

Dowty Rotol Service Bulletin No. 32-41C (Rev. 2), dated 1967, recommends that all operators replace the existing pin with a new, larger diameter greater strength pin. Assigned Maintenance Inspectors should advise all F-27 operators of this occurrence and that S. B. 32-41C has been published to solve this problem.

32-8. BOEING B-747 - LANDING GEAR CONTROL MODULE. Inadvertent retraction of the aircraft main body landing gear occurred as a result of the method in which maintenance functions were performed on the landing gear position indicator lights. To gain access to the back of the light assemblies it was necessary to separate the landing gear control module from the panel and move it aft. This had the same effect as placing the gear handle in the up position.

A control rod connects the landing gear handle on the module directly to the gear cable quadrant. As the module was moved aft, the quadrant rotated and positioned the two body landing gear selector valves in the gear up position. A mechanic, working in another area, needed hydraulic pressure and operated the No. 1 hydraulic system pump. This pressurized the body gear system and the body gear partially retracted. The aircraft received substantial damage.

To assure that this situation does not occur when moving the pilots landing gear control module, it is recommended that the Boeing 747 Maintenance Manual Section 32-31-01 be followed. These instructions include checking for installation of the gear ground lock pins and depressurization of No. 1 and 4 hydraulic systems. As an added precaution, rig pins may be installed in the landing gear selector valve quadrant as shown in the B-747 Maintenance Manual Section 32-31-00. It is recommended this information be brought to the attention of all 747 operators and that established procedures be used to prevent a recurrence of this type.

32-9. BOEING MODEL B-747 SERIES AIRCRAFT - MAIN WHEEL BEARINGS. Two failures of main landing gear wheels which have been experienced are:

a. Breakup of the grease dam flange. Investigation revealed the incorrect bearing had been installed in the outboard side of the wheel. Two inboard bearings, P/N LM229146, had been used, whereas the correct outboard bearing is P/N LM229139.

b. Cracked main wheel. The outboard wheel bearing disintegrated and the wheel hub was severely damaged. This failure also appeared to have been caused by installation of the incorrect bearing.

The inside diameter of the inboard bearing is 1/4-inch larger than the outboard portion of the axle. Since this permits easy installation of the wheel assembly, it is essential that quality control procedures are used to ensure that correct assembly and installation procedures are used during repair and/or overhaul of wheel assemblies.

32-10. BOEING 727 AIRCRAFT LANDING GEAR CONTROL SYSTEM. During the initial attempt to retract the landing gear on a Boeing 727 aircraft, the tail-skid failed to retract. The gear handle was again moved to the "up" position, and the tail-skid retracted. When the gear handle was moved to the "off" position, the main gear extended. Several attempts to raise the landing gear were made but were unsuccessful.

During the investigation, the aircraft was placed on jacks, and the gear was cycled several times. The tail-skid retraction was erratic until positive engagement was made with the "up" detent. Actuation of the gear handle from the left seat is believed to have caused the erratic operation of the tail-skid, since the selector handle rollers must be firmly placed in the detent position in order to actuate the control switches. Landing gear extension when the handle was placed in the "off" position is believed to have been caused by holding out the gear handle and possible "fishing" for the "off" detent, therefore, releasing the gear uplocks.

We recommend that this information be furnished to all Boeing 727 aircraft operators for their information and any action considered necessary.

32-11. LOCKHEED L-382 SERIES AIRCRAFT - MAIN LANDING GEAR JACKSCREW FAILURE. A Lockheed L-382 (civil version of USAF C-130) was involved in a landing accident caused by a malfunctioning main landing gear rear jackscrew and ball assembly.

a. The left main landing gear failed to extend due to the malfunction of the rear jackscrew and ball assembly manufactured by the Western Gear Corporation.
The jackscrew unit was found to be pitted; the balls were worn, pitted, and some were broken. One of the three-ball transfer tubes was plugged, preventing the return of the balls. It appeared that the permanent graphite-type lubrication coating had eroded from the jackscrew surfaces. The total time on the unit was 4,000 hours.

b. The right main landing gear rear jackscrew was found to be in similar unsatisfactory condition. Both left and right main landing gear forward jackscrews were found in satisfactory condition.

c. Lockheed-Georgia Company Service Bulletin No. 382-025, dated September 29, 1967, pertains to the inspection and lubrication of main landing gear jackscrews. Lockheed also issued all L-382 operators a telegraphic alert, dated December 4, 1967, on the same subject. The telegraphic alert establishes the recommended frequency for compliance with Service Bulletin No. 382-025 at each 250 flight hours when the aircraft is operated from paved runways, or at each 150 flight hours when the aircraft is operated from unpaved runways.

d. It is recommended that all L-382 series aircraft operators' maintenance programs provide adequate lubrication of all landing gear components at realistic time intervals, consistent with the existing operational conditions.

32-12. CHAMPION AIRCRAFT MODELS 7AC, 7BCM, 7CCM, 11AC, AND 11BC - LANDING GEAR SHOCK STRUT. Several failures of the landing gear shock strut have occurred. The piston rod in the oleo strut had sheared from the attaching bolt in the strut frame. This allows the particular landing gear leg to drop down and swing freely below the aircraft causing a potential accident upon touchdown for landing. The failures seem to be more prevalent on high time aircraft.

The strut can be identified as follows: The lower end fitting is welded to the oleo tube, whereas in newer struts it is of a threaded cap construction.

There are two means of checking for potential failure. Support the aircraft off the main gear, remove the strut from the aircraft, and check the piston rod visually. This is the preferred method. Another method is to remove the bolt, P/N AN6-23, from the lower end of strut and check for end play.

It is suggested that all owners, operators, and maintenance personnel associated with these aircraft be alerted of this condition.

32-13. BOEING MODEL 707/720 SERIES AIRCRAFT - NOSE LANDING GEAR FAILED TO EXTEND. An operator of a Boeing 707-100B was unable to extend the nose gear prior to landing. Investigation revealed that the nose gear was retracted with the inner cylinder in a steered position. The tires contacted the door during retraction and hung up on the door sill, thereby preventing gear extension. Some operators have deactivated the nose wheel centering warning system, per a Boeing Service Bulletin; therefore, a noncentered nose wheel may be retracted with the above results.

a. The known contributing factors relevant to the landing are as follows:

(1) On preceding days, pilot reports noted nose landing gear shimmy at low speed taxi, nose landing gear noisy when turned, and tow bar/link difficult to disconnect.

(2) With the quick disconnect link loose, binding prevented the towing collar from being rotated.

(3) Examination of the outer cylinder, after removal of the tow collar and its bearing halves, disclosed extensive corrosion under the plasma flame spray repair coating. The coating had lost its bond with the outer cylinder and could be easily peeled off. The tow collar binding condition resulted from the corrosion products expanding under the repair coating and forcing the coating and bearing halves outward. Resultant frictional forces on the collar prevented the nose gear inner cylinder from rotating to center prior to retraction. A similar corroded appearance existed under the steering collar repair coating.

(4) The corrosion was attributed to galvanic action between the aluminum outer cylinder and the aluminum-bronze type coating. It should be noted that a successful application of aluminum-bronze repair coating includes some method of sealing the porosity of the coating's surface and edges. On the landing gear involved in the subject landing there was no evidence of primer or any sealing process which would have prevented the moisture from reaching the interface between the outer cylinder and the repair coating.

b. It is recommended that this information be brought to the attention of all operators using Boeing Model 707/720 series aircraft. Also, assure that all nose landing gear outer cylinders which have been flame spray repaired with materials other than chrome oxide or aluminum are inspected to determine that both the towing collar and the steering collar are not binding. This inspection should be accomplished as soon as practical and repeated at scheduled intervals until the cylinders can be properly processed. The Boeing Company has published information on this subject in the form of an All Operators Letter.

32-14. BOEING AIRCRAFT - NOSE LANDING GEAR FAILURE TO EXTEND. An operator of a Boeing Model 747 aircraft landed without the nose gear fully extended resulting in considerable damage to the aircraft. The investigation revealed that the landing gear may have failed to extend as the result of inadequate lubrication.

a. The National Transportation Safety Board (NTSB) analysis report cites three similar aircraft had experienced nose gear extension/retraction malfunctions attributed to inadequate lubrication.

b. The lack of proper lubrication has been reported to have caused malfunctions of other aircraft systems/components (especially flap systems).

c. To eliminate or reduce malfunctions of this nature, approved maintenance programs concerning the lubrication of aircraft systems/components should be reviewed to assure that the lubrication frequencies are adequate and at least equal to the recommendations set by the manufacturer.

2-15. CONVAIR MODEL 240/340/440/580/600/640 SERIES AIRCRAFT - LANDING GEAR UPLATCH RELEASE CABLE. A Convair Model 580 aircraft made a gear-up landing because the right main landing gear could not be released from the up and locked position. Both mechanical and emergency air uplatch release systems were reported to have failed. The investigation revealed that the right main landing gear uplatch release cable failed and leaks were also found in the emergency air release system.

a. The uplatch cable failed at the 90° turn-around, a pulley located approximately 8½ inches from the uplatch. Cable inspection was scheduled at 550-hour intervals; however, to adequately inspect the condition of the cable, it must be disconnected from the uplatch and pulled back clear of the pulley.

b. The operator has replaced the MLG uplatch cables in all aircraft. The cables installed in ten aircraft will be sampled for condition after 4000 hours of service. A hard time for cable replacement will then be established from the sample findings.

c. Functional tests of the emergency air uplatch system revealed that with normal air bottle pressure ranging from 1450 to 2000 p.s.i., the latch released on each test. Failure of latch to release did not occur until the air bottle pressure decayed to 1050 p.s.i. This test did reveal the existence of two air leaks when the lines were pressurized. An "O" ring was found deteriorated at the adapter fitting located in the left nose wheel well tunnel. The adapter fitting is shown in Convair Model 580 Illustrated Parts Catalog, figure 3128.1, component index number 210. The other leak was in the union located on the left

side of the lower baggage compartment. The union nuts were found tight but the assembly was loose on the tubing. This union assembly is shown on figure 3128.1 component index number 389, of the Convair Model 580 Illustrated Parts Catalog.

d. Based on this experience and the lack of a procedure in the Convair Maintenance Manual, the operator has instrumented a pressure decay test which will be accomplished concurrent with the scheduled 1,675-hour landing gear functional check. The decay test procedures consist of the following steps:

(1) Service air bottle to 2,000 p.s.i.

(2) Open emergency air uplatch valve and hold open for one minute.

(3) Observe initial pressure drop on the air bottle pressure indicator. (Initial drop will be 200 to 300 p.s.i.)

(4) Pressure should decay no more than 50 p.s.i. after initial drop is observed.

(5) If pressure decay is more than 50 p.s.i. in one minute, a system leak is indicated.

In addition, the operation of the uplatch cylinder should be observed for signs of sticking or sluggish operation.

e. This information should be brought to the attention of all operators of Convair Model 240, 340, 440, 580, 600, and 640 series aircraft.

*32-16. TAXIING THE DC-8 AIRCRAFT AT LOW SPEEDS WITH THE COCKPIT ANTI-SKID SWITCH IN THE "FLIGHT MODE" POSITION. Recently, a DC-8-60 series aircraft lost braking action during ground taxiing operations at slow speeds. The aircraft was equipped with the Hytrol Mark II anti-skid system. The loss of braking action at low speed taxiing was attributed to the failure of both nose oleo switches, P/N 116-1006.

The failure of both nose oleo switches causes the anti-skid valve to go to the full dump position, overriding the nose wheel speed transducer at speeds of 15 knots or below.

The above condition will result if the anti-skid remains in the "flight mode" position after landing and turning off the runway. In the "flight mode" position, the touchdown protection circuit is still active and will react accordingly. Normal braking may be regained by placing the cockpit anti-skid switch to the "off" position.*

Ironically, the failure of only one nose oleo switch does not adversely affect the braking action at the low taxi speeds while the anti-skid switch is in the "flight mode" position; however, it will not be detected by the flight crew. Failure of the second nose oleo switch causes the loss of braking action described above.

The McDonnell Douglas Company issued an "All Operators Letter", No. 8-657 dated October 17, 1973. It advises that one operator had found a total of 25 switches inoperative on 24 aircraft inspected. The letter recommends that all operators of the DC-8-61, 61CF, 62, 62CF, and 63 series aircraft inspect each individual switch for proper operation.

The earlier type of switch assemblies are identified by P/N 116-1006 and are date coded, i.e., 15-70 (15th week of 1970). The assemblies consist of two small basic switches which operate sequentially resulting in fatigue of the contact blade due to overtravel. Switches with later date codes have been modified so that both switches actuate at approximately the same time which reduces the overtravel.

Aircraft with the Mark II anti-skid systems installed prior to the DC-8-60 series and those aircraft with the Mark I or Mark III systems installed are not affected due to circuitry and installation.

It is recommended this information be brought to the attention of all operators using the McDonnell Douglas DC-8 series aircraft cited above and emphasize the importance of compliance with the manufacturer's recommendation.

*32-17. McDONNELL DOUGLAS MODEL DC-9 AIRCRAFT LANDING GEAR CONTROL LEVER - IMPROPER INSTALLATION OF CENTER INSTRUMENT PANEL. A flight crew was unable to move the landing gear control lever to the down position for landing gear extension. The crew released the center instrument panel at the top which moved it approximately 3/8 of an inch permitting gear control lever movement with normal gear extension.

a. Ground inspection revealed that the center instrument panel was improperly installed. The right hand slide of the panel was positioned on top of the roller causing the slide to interfere with the landing gear control rod. (The panel had previously been removed for instrument replacement.)

b. McDonnell Douglas DC-9 Maintenance Manual, Chapter 31, contains a notation to check for interference of the landing gear control lever, following installation of the center instrument panel. An "All Operators Letter" No. 9-739, dated November 29, 1972, was issued to provide modification instructions to preclude improper installation of the center instrument panel's slide bar.

c. It is recommended that this information be brought to the attention of all operators using DC-9 aircraft and the importance of compliance with the manufacturer's recommendations be emphasized. *

*32-18. CESSNA MODEL 310/320/340/401/402/411/414 AND 421 SERIES AIRCRAFT -- LANDING GEAR RETRACTION AND EXTENSION SYSTEM. Numerous incidents involving collapse of the landing gear on these model aircraft have occurred.

a. Some specific causes of landing gear operational difficulties are:

(1) Premature retraction following lift-off resulting in the aircraft settling on a partially retracted landing gear, thus inflicting damage on the operating mechanism and linkage.

(2) Extension of landing gear above the airspeeds specified by placards or flight manual.

(3) Out-of-rig conditions found in either or both the uplocks and downlocks.

(4) Damaged electrical warning and position indicating systems.

(5) Lack of proper lubrication.

b. In order to decrease the inservice occurrences involving the landing gear systems of these aircraft and to assure a higher level of safety, it is recommended that aircraft owners/operators and/or maintenance personnel be urged to strictly adhere to the aircraft manufacturer's recommended maintenance procedures. The following service manual changes have been issued by Cessna and are considered necessary (in addition to the basic service manual) to have at hand when maintenance or rigging of the landing gear is accomplished.

(1) For Models 310 through 310K and 320, Service Manual Change Notice dated July 13, 1973.

(2) For Models 310 through 310N, 320, 411, and 411A, Service Manual Change Notice dated April 12, 1974.

(3) For later Models 310, 340, and 400 series aircraft, all necessary information is contained in the current service manual. *

32-19. BOEING MODEL 707 AIRCRAFT - WHEEL FAILURES. An operator of Boeing Model 707 aircraft encountered two failures of wheel halves. One failure occurred during takeoff roll and the other happened during taxi operation.

a. The wheel halves failed in the tubewell area and extended for the full 360 degrees. The manufacturing dates of the wheel halves were 1960 and 1961. Engineering analysis disclosed the cracks in the tubewell portion of the wheel originated from areas of metal fatigue.

b. The wheel halves are routinely inspected during overhaul occurring every nine months or less, using both eddy current and ultrasonic types of nondestructive testing methods. The ultrasonic testing method is used for the wheel tubewell area. Boeing Model 707-100 series aircraft wheels are more susceptible to failure in the tubewell area due to the metal thickness.

c. The operator has initiated a recurrent training program to emphasize the NDT inspection process for the facilities that accomplish wheel overhaul.

d. Inspectors should assure that all operators of large aircraft have an adequate overhaul and inspection program for wheels with emphasis being placed on the tubewell area of the older wheels.

*32-20. DOUGLAS DC-9 AIRCRAFT MAIN LANDING GEAR RETRACT CYLINDER EYEBOLTS.

The following information is for those operators with DC-9 aircraft (Series 10, 20, 30, and 40).

Several DC-9 operators have reported finding the main landing gear retract cylinder eyebolts (Douglas P/N4913656-3) rusted/corroded and, in some instances, failed in the threaded area. It appears that the clearance fit of the thread permits the entrance of moisture resulting in rust/corrosion. This condition, aggravated by fretting in the threaded area, can result in failure of the eyebolt. It is recommended that the operators of the subject aircraft perform a fleet campaign in order to confirm the integrity of the landing gear. *

32-21. INSPECTION OF DC-6 MAIN LANDING GEAR LATCH ASSEMBLY, P/N 5493723, FOR CRACKS. During a routine lubrication of the main landing gear latch assembly, grease was observed oozing from a crack in the inboard tang of the main landing gear latch assembly (reference McDonnell Douglas DC-6 Illustrated Parts Catalog, Figure 26-13, Item 22). Item 23 is the Zerk fitting for lubricating this part. It is recommended that inspectors alert their operators of the crack problem and grease detectability condition.

32-22. BOEING MODEL 727 SERIES AIRCRAFT - MAIN LANDING GEAR SIDE STRUT ASSEMBLY.

a. An operator discovered that some of the main landing gear side strut assemblies (P/N 65-17657-) on their B-727 aircraft had not been modified in accordance with AD 67-14-2.

b. The operator had at one time modified all of the side struts in their fleet including spares as required by the AD. Since that time, *additional side strut lower segments (P/N 65-19520-9) were acquired from an unknown source and introduced into their fleet.

c. The side strut lower segment (P/N 65-19520-9) is a part in the * main landing gear side strut assembly (P/N 65-17657-). AD 67-14-2 requires that a "controlled groove" be incorporated around the outside upper end of the side strut lower segment.

d. Boeing Service Bulletin 32-79, as referenced in AD 67-14-2, does not require changing the part number on the side strut lower segment after *the "controlled groove" is machined into it. Boeing changed the segment part number on all new segments having the "controlled groove" to (P/N 65-19520-16). This P/N has been further amended to -22 or -27 by additional modifications. *

e. The illustration in Figure 1 of Boeing Service Bulletin 32-79 shows the "controlled groove" in the side strut lower segment. Boeing has not amended their B-727 maintenance manuals or parts catalogs to show the "controlled groove" in any of the illustrations.

f. Shop personnel assembling B-727 main landing gear side struts * (P/N 65-17657-), which include the lower segment (P/N 65-19520-9), cannot * currently rely on part numbers or illustrations provided in Boeing manuals to accurately determine if AD 67-14-2 had in fact been complied with.

g. It is recommended that principal airworthiness inspectors advise their B-727 operators of this occurrence and take appropriate action to assure that all parts are modified in accordance with the AD. Also, operators should amend their maintenance documents to show the "controlled groove" as required by the AD.

BOEING SERVICE BULLETIN NO. 32-79

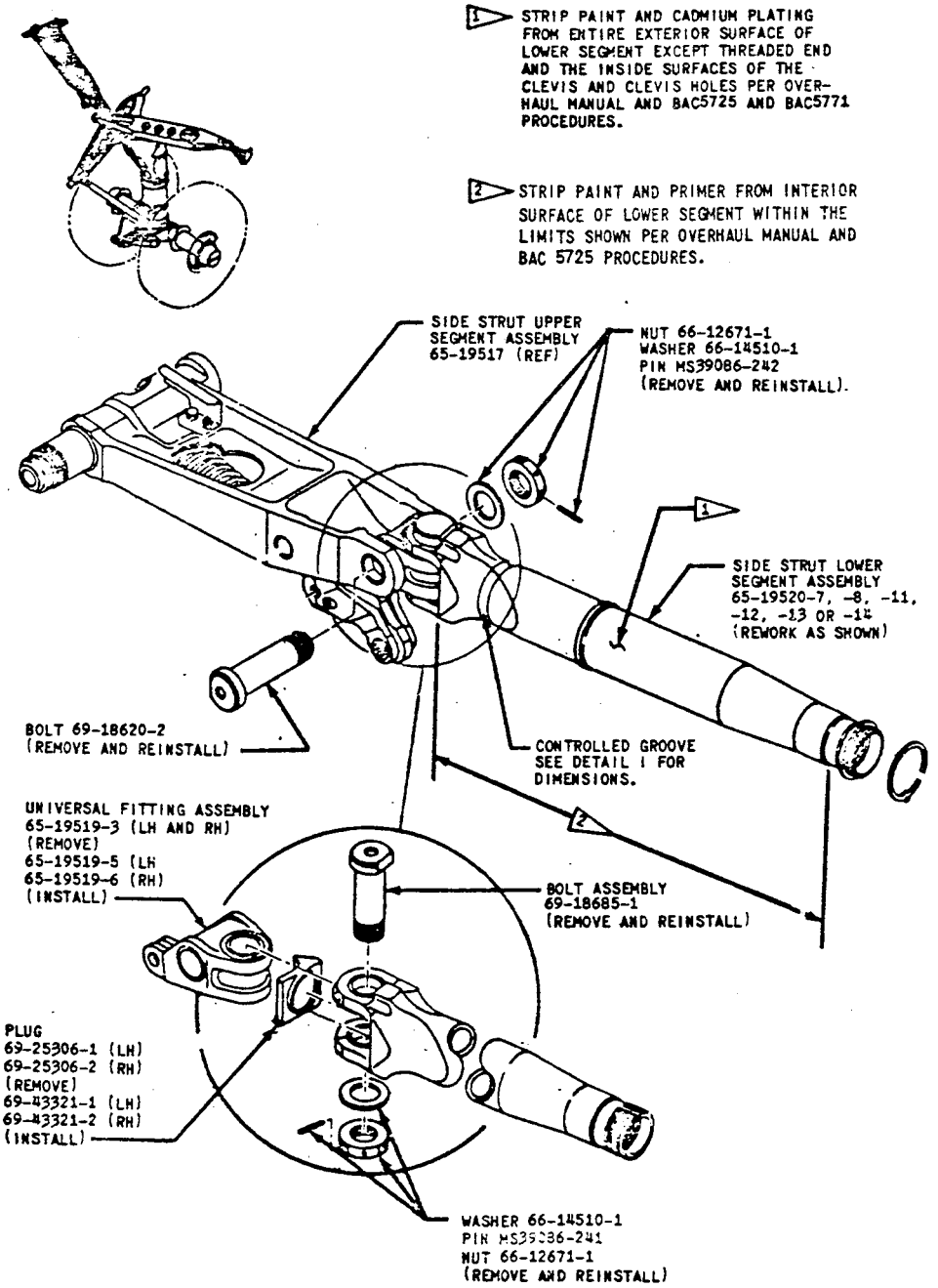

FIGURE 1. MAIN GEAR SIDE STRUT ASSEMBLIES

*

*32-23. ANALYSIS OF DC-8 WHEEL FAILURES EXAMINED BY THE NTSB METALLURGICAL LABORATORY.

a. From October 1977 through July 1978, the NTSB metallurgical laboratory examined six DC-8 wheel failures. In each case, catastrophic failure stemmed from fatigue cracks that originated either on the tube well outside diameter or the bead seat radius.

b. Detailed examination of the fractures with the aid of a scanning electron microscope disclosed that all of the fatigue failures initiated at corrosion pits on the outside diameter of the wheels.

c. None of the wheels were adequately protected from corrosion by paint or anodized coating. Consequently, corrosion pits were prevalent over most of the wheel surfaces. These corrosion pits were extremely small and were not readily discernible with the unaided eye. At least 10X magnification was required at the NTSB laboratory to detect these pits.

d. It was noted that, in all of the fatigue failures, abrupt changes were observed in the fatigue crack plane of propagation.

e. Studies conducted by the wheel manufacturer have shown that fatigue cracks in aluminum wheels, which originate in the bead seat radius or on the outside diameter of the tube well, propagate on a plane at a distinct angle to the true circumferential. Changes in the direction of crack propagation have been attributed to changes in the direction of wheel rotation. Thus, it appears that the wheels had been removed and reinstalled at least once with opposite directional rotation after the fatigue cracks had progressed for a distance.

f. Most operators have indicated that they subject their wheels to NDT inspection at each tire change. For this reason, it appears conceivable that, in the case of these particular wheels, cracks were in existence at the time of inspection, went undetected and were returned to service. This is evidenced by the change in direction of crack propagation which comes about by installing a wheel in a position where its direction of rotation is opposite to what it had been previously.

g. It is felt that adequate inspection techniques would have detected the cracks before they had propagated to a critical size.

h. The wheel manufacturer favors the use of automated eddy current equipment although they report that some operators have had excellent results using ultrasonic techniques. In any event they recommend that whatever equipment is used, it should have sufficient sensitivity to detect and indicate a .08 inch (2 mm) crack.

i. Inspectors should make their assigned operators aware of this information and emphasize the importance of using proper NDT equipment and techniques. *

j. Of equal importance is:

(1) A proper maintenance and calibration program for the NDT equipment.

(2) The maintenance of current technical data and procedures for the proper inspection of wheels.

(3) A procedure which will assure that only qualified personnel, trained in the use of the NDT equipment, are permitted to perform NDT inspections.

(4) A followup system to assure that all of the required inspections have been completed properly.

32-24. LOSS OF NOSE LANDING GEAR DRAG BRACE UPPER CROSS TUBE TAPER PINS ON DC-8 AIRCRAFT.

a. Several incidents have been reported concerning cocked or collapsed nose landing gears on DC-8 aircraft. The incidents were attributed to the loss of one or both of the end taper pins (P/N 4716811-501) installed in the nose landing gear drag brace upper cross tube.

b. One operator reported that a missing taper pin resulted in the collapse of a DC-8 nose landing gear while the aircraft was being towed.

c. When the taper pin is not in place the nose landing gear drag brace upper cross tube bearing can migrate out of position. This can allow the cross tube to become detached from the airframe support structure.

d. Loss of a taper pin can be caused by the backing off of the retaining nut or failure of the taper pin itself.

e. Principal airworthiness inspectors with DC-8 responsibility should assure that their assigned operators are made aware of this potentially unsafe condition and encourage them to incorporate a periodic torque check of the cross tube taper pin nut in their maintenance program.

32-25. LOCKHEED L-1011 MAIN LANDING GEAR WHEEL FAILURES.

a. A fatal accident involving the in-flight failure of a main landing gear wheel on a Lockheed L-1011 aircraft stresses the importance of establishing thorough wheel inspection procedures for fatigue and corrosion.

b. The investigation determined that the wheel outboard flange failed with the landing gear in the wheel well and the aircraft at 29,000 feet. This resulted in wheel fragments entering the aircraft cabin causing an explosive decompression and two fatalities. Hydraulic, electrical, and flight control systems were also damaged.

c. Principal airworthiness inspectors with L-1011 responsibility are requested to evaluate their assigned operator's wheel inspection procedures for adequacy and encourage implementation of the following, if not already incorporated in their maintenance/inspection program.

(1) Eddy current inspection of wheel bead seat flanges for cracks at each tire change.

(2) Procedures for maintenance and calibration of test equipment.

(3) Permit only qualified personnel trained in the use of the test equipment to perform inspections.

(4) Comprehensive maintenance/inspection procedures for detecting and preventing corrosion.

d. For the BF Goodrich main landing gear wheel used on the L-1011, particular attention should be given to the upper area of the critical bead seat radius as illustrated on page 5 of BF Goodrich Service Bulletin No. 370 issued June 8, 1979, or subsequent amendments.

* 32-26. DOUGLAS DC-8 MAIN LANDING GEAR BOGIE BEAM SWIVEL LUG BORE.

a. Several failures of DC-8 bogie beam swivel assemblies have been attributed to corrosion of the beam swivel lug bore and subsequent failure under high loads.

b. Investigation has revealed that failures have occurred as low as 4,300 hours since overhaul and failures of some assemblies affected by Airworthiness Directive 68-26-07 have occurred as low as 600 hours since overhaul. A survey of DC-8 operators revealed that overhaul times vary between 12,500 and 25,000 hours.

c. Douglas All Operators Letters 8-526 dated February 16, 1971, and 8-436 dated April 22, 1970, and the component overhaul manual provide information for inspection, rework, and sealing of the swivel lug bores.

d. One operator has an 18,000 hour bogie beam overhaul with an interim refurbishment program at 6,000 hours. This includes a visual 10 X magnification, magnetic particle and eddy current inspections with particular emphasis on chrome plating of the lower bore. This program has been very effective in preventing failure of bogie beam lugs. *

e. Principal airworthiness inspectors with DC-8 responsibility are requested to review their assigned operators' bogie beam inspection/overhaul programs to ensure that the scope and inspection times are effective.

* 32-27. CONVAIR MODEL 240/340/440/580/600/640 SERIES AIRCRAFT LANDING GEAR DOOR LUBRICATION.

a. An investigation of a Convair 580 nose landing gear accident revealed that the gear door hinge had fractured. This caused the right door to jam against the left door and prevented the gear from extending.

b. Metallurgical examination of the hinge determined that the fracture was due to overstress. However, the source of the overstress condition was not determined. Also, the hinge bushing and pivot bolt were noticeably dry of any lubricants.

c. A review of the lubrication section of the manufacturer's maintenance manual indicates that bushings of the type used for the nose door hinge are impregnated with MIL-L-7870 oil at the time of manufacture and suggests that the bushings should be lubricated with the same type oil at major inspection periods.

d. Principal airworthiness inspectors with Convair responsibility are requested to ensure that landing gear door lubrication is adequately covered in their assigned operators' maintenance/inspection program. *

*32-28. Boeing 727 Series Aircraft - Main Landing Gear Door and Lock System Inspection.

a. A B-727 experienced malfunction of the left main landing gear actuating system after takeoff. Recycling the landing gear and manual extension attempts failed to obtain safe extension or retraction indications for the left main gear, so the right main and nose landing gear were retracted and an intentional gear-up landing was made.

b. During the investigation, with the aircraft on jacks and the left main gear door removed, the left main landing gear operated normally, both hydraulically and manually. Examination of the left main gear door revealed that the inboard actuator arm to which the door actuator piston rod attaches was loose on its mount. The serrated arm is adjustable to allow for proper rigging of the doors, and is fastened to its serrated mount by two attachment bolts. The bolt heads could be turned by hand, and there was evidence of fretting in the serrations on the arm and its mount. The B-727 maintenance manual specifies that the attachment bolts are to be torqued to 25 to 42 foot-pounds after door rigging is completed.

c. Unwanted relative movement between the door actuator arm and its mount apparently resulted in a misrigged door, which disrupted the mechanical sequencing of the hydraulic system so that hydraulic pressure was not supplied to the main gear actuator during attempts to extend the gear. Further, the mechanical interference between the gear and the door mechanism apparently prevented manual extension of the gear.

d. Airworthiness Directive (AD) 79-04-01 applies to Boeing Model 727 Series aircraft and was issued to prevent main landing gear-up landings as a result of structural failure in the lock system. Paragraph F.2. of the AD requires replacement of the main landing gear lock system components with improved components in accordance with Boeing Service Bulletin 727-32-237 Revision 2, and that the main landing gear lock system be overhauled and maintained in accordance with a supplemental program acceptable to the assigned FAA maintenance inspector and approved by the Manager, Seattle Area Aircraft Certification Office, FAA Northwest Mountain Region. The AD notes that the overhaul/maintenance program specified in Air Transport Association (ATA) Report 32-30-1, Revision 4, dated September 9, 1980, is an FAA approved program for the purpose of complying with the requirements of paragraph F.2. of this AD. Several B-727 operators may be following this program to comply with the AD.

e. Principal maintenance inspectors are requested to bring this to the attention of their assigned B-727 operators. They should recommend a fleet inspection of the inboard attachment fittings for the actuator arms of the main landing gear doors for proper torque and security of the two attachment bolts; and if any evidence of looseness or relative motion in the fitting is found, the gear doors should be rerigged. Principal maintenance inspectors should review their assigned B-727 operators' maintenance programs and assure that these fittings are being inspected at a timely interval. They should also review their operators' maintenance programs for compliance with AD 79-04-01. *

APPENDIX 13. LIGHTS (ATA CODE 3300)

33-1. FIRE HAZARD - CARGO COMPARTMENT LAMPS. An unscheduled landing was made by a Convair 440 aircraft because of smoke coming from forward cargo compartment. The smoke was caused by a mailbag contacting the forward cargo compartment light. The light remained on due to a defective door switch, Convair P/N 340-3150749.

Investigation disclosed that type 1385 Lamps, which are the recommended lamps for the forward and aft upper cargo compartments, may protrude below the fiberglass light shield by as much as one-quarter inch in some installations. If the door actuated switch sticks or malfunctions so that the lights in the cargo compartment are not extinguished when the door is closed, mailbags or other cargo may come in contact with the face of these spotlight type lamps. The relatively high temperature may cause combustion. The fact that these lights have not been extinguished when the cargo door is closed may not be readily apparent to ground personnel through the viewing windows because these compartments are normally lighted at all times by the ceiling light in the compartment. The webbed gates, which are used in the cargo compartments, only extend approximately two feet up from the floor to prevent cargo from spilling out when the door is opened, but do not prevent cargo from contacting the light assembly shields which are above the cargo doors approximately four feet off the floor.

The operator who encountered this incident is replacing the 1385 Lamps with 307IF Lamps, which are shorter and will recess well within the shields and do not have the concentration of heat in a single direction as the 1385 Lamp.

A fire in the aft cargo compartment on a Convair 440 aircraft was caused by combustible material contacting the ceiling light. The ceiling light was protected by two flush bars across the receptacle. As a result, Convair recommended two changes to prevent fires originating at the cargo compartment ceiling fixture on CV-340/440 aircraft. A new type aluminum casting guard is available (P/N 440-3360600-7). This is a convex guard which will prevent cargo from contacting the bulb. Only General Electric 309IF frosted type bulbs should be used in the cargo compartment ceiling lights.

33-2. McDONNELL DOUGLAS MODEL DC-9 AIRCRAFT - FIRE HAZARD - FLIGHT ATTENDANT'S AFT WORK LIGHT, ELECTRICAL CIRCUITY. During an inspection, smoke was noticeable in the aft cabin. The origin of the smoke was traced to an electrical short circuit in one of the light assemblies installed for the flight attendants.

a. The short circuit was caused by the ground return wire being routed directly over and making contact with the 28 VAC input terminal on the light assembly.

b. Further investigation revealed that the light assembly, aft light transformer, and associated wiring were burned. The five ampere circuit breaker which protects the input to the transformer did not open the circuit. In addition, the circuit breaker was tested under load conditions and found to meet the specifications set by the manufacturer.

c. As a result of this incident, the operator has issued an Engineering Order to reroute the ground return wires for both aft attendants' work lights and, in addition, to install a three ampere circuit breaker to protect the 28 VAC transformer output circuits.

d. This information should be brought to the attention of all operators using McDonnell Douglas DC-9 aircraft.

*33-3. DC-9 EMERGENCY LIGHTING SYSTEM. One operator's recent evaluation of the DC-9 emergency lighting system indicated unsatisfactory results were obtained with a Grimes power pack unit (P/N 60-0304-31) using a Marathon battery (S-103) due to an unacceptable battery recovery charging rate. Additional tests revealed satisfactory results were obtained with a Grimes power pack using a General Electric battery (P/N 41B004 A DO 763) which provides increased efficiency.

a. McDonnell Douglas has issued All Operators Letters (AOL #1109 and #1111 dated January 30, 1978) and revised the DC-9 maintenance manual, 33-53-0, which emphasize the need for proper cleaning and testing of the emergency lighting fixtures in the aircraft and details additional maintenance requirements for processing the ni-cad battery units in the shop. Grimes Technical Information Letter #75 defining instructions on the revised shop charging rate (400 milliamperes) will be incorporated in the overhaul manual, 33-50-02.

b. The revised test of the battery pack installed in the aircraft which requires a minimum of 1.8 volts is an acceptable test of system integrity; however, it does not necessarily ensure that the battery capacity is sufficient to meet the 10-minute requirement of FAR 121.310(d).

c. Principal Avionics Inspectors should assure that their assigned operator's maintenance program is adequate in terms of frequency and scope so that the aircraft will continue to meet the emergency lighting requirements of FAR 121.310(c) and (d). *

33-4. EMERGENCY LIGHTING SYSTEMS ON AIRCRAFT - FAR SECTIONS 25.812(e)(1) AND 121.310(d)(2)(i)

a. Attention concerning the manual operation of the emergency lights was addressed in 1978 and resulted in a previous maintenance bulletin 33-4 being issued. That bulletin, in part, advised avionics inspectors that an installed DC-3 emergency light system could not be manually operated from the passenger compartment and that thorough evaluations should be conducted when certifying older aircraft to existing requirements.

b. In December 1978, a recommendation was made that an AD be issued on CV-340/440/580 airplane emergency light systems. A determination was made that the most appropriate action would be to take certificate action against those Part 121 operators who do not comply with Section 121.310(d) since there was no noncompliance with the airworthiness certification requirements.

c. Since May 1, 1979, notices, memos, and a denial to an air carrier's exemption petition have established the Administrator's position that the flight attendant must be able to manually turn on the emergency lights independent of the cockpit emergency light switch.

d. In 1980, a question was asked as to whether or not the aircraft battery switch could be used in order to enable the flight attendant to turn on the emergency lights. A position that the emergency lights configuration required total independency was subsequently modified to permit the use of aircraft power to provide the logic for the arming of the emergency light system but to retain switch independency concerning the manual operation of the system. Switch independency concerning manual operation of the system is not achieved if either the flightcrew or flight attendant needs to rely on the other's emergency light switch being placed in the ARM position before they can turn on the emergency lights.

* e. In conclusion it has been determined that: (1) AD action or retroactive rulemaking is not warranted on those airplane models where the battery switch must be on to provide switching logic to the emergency lights; (2) no adverse service history exists to make retroactive action regarding the battery switch necessary; (3) the new airplane models now being certificated under Part 25 will not be dependent on the position of the battery switch for proper operation of the emergency lights; and (4) airplanes having systems which are configured such that either the flightcrew or flight attendant needs to rely on the other's emergency light switch placed in the ARM position before they can turn on the emergency lights should be retrofitted. *

33-5. AIRCRAFT INSTRUMENT LIGHTING REQUIRMENTS FOR PARTS 121, 123, AND 135 OPERATORS.

a. A deHavilland DHC-6-200, owned and operated by an air carrier, crashed during a night nonprecision instrument approach. Fifteen passengers and both pilots were killed; one passenger was seriously injured. The National Transportation Safety Board's investigation of this accident disclosed two areas of concern; one in maintenance practices, and the other in operational factors.

b. In the area of maintenance, it was found that there was a potentially hazardous situation regarding cockpit instrument lighting. Pilots who had flown the aircraft involved in the accident testified that the cockpit instrument lighting was poor. The cockpit lights had to be kept dim to prevent windshield/window glare, and there was a mixture of red and white light bulbs in the center instrument panel. Thus, if the rheostat was set low enough to eliminate glare from the white lights, the red bulbs did not provide enough light to properly illuminate the instrument in which they were installed. This problem was the result of a maintenance practice which allowed maintenance personnel to replace burned-out light bulbs with new bulbs of either color. With this combination of white and red bulbs, the pilots were forced to choose between setting the white lights at a level that would allow them to read all the instruments, with the resulting glare and possible loss of night vision, or at a lower setting where the white lights did not cause glare but instruments would be unreadable.

c. Civil Air Regulations, which include Parts 3 and 4b, and Federal Aviation Regulations, which include Parts 23, 25, 121, 123, and 135, address, in part, instrument lighting. Included in some of these Parts are Sections 23.1381, 121.323(d), and 121.325(c).

d. Although Part 135 does not address instrument lights for aircraft carrying passengers under IFR or for aircraft engaged in cargo operations, Section 23.1381 requires, in part, that the instrument lights must make each instrument and control easily readable and discernible; be installed so that their direct rays, and rays reflected from the windshield or other surface, are shielded from the pilot's eyes.

e. Federal Aviation Regulations Sections 121.323(d) and 121.325(c) respectively require, in part (with a minor difference), that no person may operate at night or under IFR or over-the-top conditions an airplane unless it is equipped with instrument lights providing enough light to make each required instrument, switch, or similar instrument, easily readable and installed so that the direct rays are shielded form the flight crewmembers' eyes and that no objectionable reflections are visible to them.

f. Principal avionics inspectors are requested to bring this to the attention of their Parts 121, 123, and 135 operators.

APPENDIX 14. NAVIGATION (ATA CODE 3400)

34-1. PITOT-STATIC SYSTEM HOSE DEFICIENCIES. Instrument system failures were discovered during an inspection to determine the condition of the rubber hoses in the pitot-static system of a Convair 880. This same condition might exist on any aircraft.

a. In one instance, the flexible hose, Zep Aero P/N 591-20, manufactured March 12, 1962, was found punctured.

b. In the second instance, a small bubble was noticed in the inner lining of a laminated type static system hose, Zep Aero P/N 591-20, manufactured February 19, 1962. Both of these hoses had been in service for approximately six years when the failures were detected. A fleet campaign replaced all the pitot-static system hoses on a one-time basis. These hose failures were found while performing a 20,000-foot altimeter leak check, during which time the altimeter became sluggish.

c. Inspection and replacement of this general type of instrument hose is normally "on condition" for most all makes and models of air carrier aircraft. Hoses of similar quality are used in many other types of air carrier aircraft instrument systems.

d. There is no known hard and fast inspection rule that can be applied to instrument rubber products except the visual method. Conditions such as pressure, temperature, location in the aircraft, operational environment of the aircraft, atmospheric conditions, and shelf-life storage time all influence the life expectancy of the rubber. As a general rule, the air carrier should be especially critical of any hose material that is known to be several years old.

e. It is recommended that each principal electronics inspector determine that his assigned carriers' procedures for inspection of "on condition" instrument rubber products in general, and instrument hose assemblies in particular, are adequate to meet the environmental conditions under which the carrier operates.

34-2. POTENTIAL USE OF VERY LOW FREQUENCY (VLF) NAVIGATION SYSTEMS FOR IFR FLIGHTS. Recent developments by several companies may soon make equipment available that uses VLF signals for aircraft navigation. The characteristics and limitations of VLF such as ionosphere propagation effects, precipitation static effects, and the use of signals not controlled by the FAA (such as Navy VLF communications signals) will have to be analyzed before approval is granted.

It is anticipated that field inspectors may be approached by manufacturers or aircraft owners for installation approvals and authorization to use the equipment for IFR navigation. In view of the relative lack of data and service experience regarding this type of VLF navigation, field inspectors should use caution regarding these requests. Applicants should be advised to contact the Flight Standards Service, Washington, D.C., regarding operational approval. However, field approval of installations can be made for evaluation purposes on a no-hazard basis.

34-3. ATC TRANSPONDER RAMP TEST SET INTERFERENCE. There is a possibility of interference between the ATC ground station and the Collins 476X-1 ATC transponder ramp test set. This is due to the pulse repetition frequency (PRF) of the test set being a multiple of the ground station PRF. The PRF of the ground station is 400 while the test set varies between 800 and 1200.

Collins has published Service Bulletin No. 3, dated August 1, 1971, for the 476X-1 test set. The modification contained in this Service Bulletin will lower the PRF to approximately 257. The 476X-1 test sets affected are Collins P/N 522-1971-000, serial number 134 and below, and P/N 522-1971-157, serial number 115 and below.

Avionics inspectors should encourage users of the 476X-1 ramp test set to incorporate this modification which is available from Collins in kit form as P/N 606-3845-001.

34-4. PHASE RELATIONSHIP OF 90 AND 150 CPS GLIDE SLOPE SIGNALS. Incidents of incorrect phase relationship of the modulation signals from a Boonton 232-A Glide Slope Signal Generator have been reported. The importance of assuring correct phasing of 90 and 150 cps glide slope generator signals is noted by the following excerpt from Radio Technical Commission for Aeronautics (RTCA) Paper 208-53/DO-52 which establishes the approved procedures for adjustment of VOR and ILS receivers:

> "The indicated position of the localizer and glide slope on-course signals is a function of the difference in the phase relationship of the test signal used in the adjustment of the receiver centering control and the phase relationship of the signal from the ground facility. The amount of change in indicated position of the localizer on-course signal, due to this effect, is of minor importance. However, the change in indicated position of the glide slope signal may be appreciable. For this reason, the phase relationship of the 90 and 150 cps signals of all glide slope ground facilities and of all glide slope test equipments should be the same."

When the signal generator was used to calibrate a glide slope receiver, the receiver delivered a 5 microampere flydown signal to the ILS indicator when an on-course signal of correct phase was received. Larger indicated discrepancies could occur dependent upon the extent of the "out of correct phase" condition of the 90/150 cps modulation of the signal generator being used for receiver calibration.

It is suggested that all users of any make glide slope signal generator be advised to test their 90/150 cps tone generator to assure that proper phase relationship exists, unless such tests have been previously conducted and it has been established that proper phase relationship does exist.

34-5. CORRELATION OF TEST SIGNALS WITH FLIGHT PATH DEVIATION INDICATOR POINTERS. An aircraft was dispatched on two consecutive flights with a wiring error in the glide slope pointer circuit of a flight path deviation indicator. This error resulted in a reversed indication of a glide slope signal. Although in this particular case safety to flight was not involved, such an occurrence points out the need to review precedures and take necessary corrective action to prevent recurrence.

Inspectors should encourage their operators to review their manuals and procedures to assure a positive check of deviation indicator pointer sensing.

With the use of automatic cycling test equipment such as the G-250 ramp test equipment, it is important that procedures be clearly set forth which ensure positive correlation between pointer sensing and the nature of the transmitted signal. This applies also to the correlation of the 75 mc. marker light response with the appropriate modulation tone.

34-6. MAINTENANCE OF PITOT-STATIC SYSTEMS ON JET AIRCRAFT WITH ADDITIONAL AIR DATA EQUIPMENT INSTALLED. The correction of a pitot-static system fault on a jet aircraft resulted in several logbook complaints in readings between the pilot and copilot altimeters. Due to ineffective troubleshooting techniques and maintenance practices, a slighty loose static connection on the flight recorder caused 90- to 300-foot discrepancies to exist.

The requirements for air data inputs on modern jet aircraft, occasioned by the installation of computers, machmeters, recorders, additional differential pressure switches, etc., have contributed to the complexity of the pitot-static systems. This complexity, together with the more severe environmental conditions due to the wider operating ranges of jet aircraft, indicates a need for more thorough and exact maintenance and inspection procedures, as compared to conventional aircraft, to ensure maximum reliability of these systems.

Recognition of these problems and initiation of preventive procedures are necessary. Assigned inspectors should familiarize themselves with the factors affecting maintenance and reliability of pitot-static systems and should encourage their operators to review their procedures and to make necessary changes to assure adequate coverage in those areas where additionally installed air data equipment is connected to the aircraft pitot-static systems.

*34-7. MAINTENANCE OF PITOT AND STATIC SYSTEMS. During an industry avionics maintenance meeting considerable discussion confirmed the need for reevaluating maintenance procedures associated with leak testing of pitot-static systems after maintenance. In essence, each maintenance program for large aircraft should assure the following:

On large aircraft, after each instance in which a connection in the pitot or static systems has been broken to permit the replacement of instruments, hoses, or tubing, or for other reasons, a low range leakage test should be performed. Quick disconnects, even if provided with self-sealing valves should not be exempted from this requirement.

a. Pitot system. Leaving the static system vented to ambient, pressure should be applied slowly to the pitot system until the airspeed indicator reads 250 knots, and the system and tester closed off. In a one-minute period the leakage of each system separately should not exceed 2.5 knots. The pressure should be released slowly.

b. Static system. Leaving the pitot system vented to ambient, the pressure in the static system should be reduced slowly until the airspeed indicator reads 250 knots or the altimeter reads 3000 feet above field altitude, and the system and tester closed off. In a one-minute period the leakage of each system separately should not exceed 2.5 knots or 60 feet. The vacuum should be released slowly.

For light aircraft refer to Advisory Circular 43.13-1A Section 4 pages 307 and 308 which provides the necessary instructions.

All testing should be done only by persons thoroughly familiar with the airplane and its instruments and with the test equipment used. *

34-8. CAGING OF ARTIFICIAL HORIZONS. Several models of 5" air-driven artificial horizon indicators currently in use employ various types of caging locks or warning flags. Experience with gyro horizons has brought about gradual elimination of pilot-activated caging devices and warning flags. A current method for protecting gyros during shipment is by using a caging lock installed at the back of the instrument. This lock is not accessible to the pilot.

The installer is responsible for uncaging this type artifical horizon. A few instruments have been installed, however, in the fully or partially caged condition. To minimize the possibility of installing caged gyros, one repair station is proposing a preprinted read sticker to be placed on the glass faceoof the instrument stating "Uncage before use." To be most effective, the sticker might also contain instructions for fully uncaging the gyro and a reminder to remove the sticker after this is accomplished.

Repair stations that install or perform maintenance on gyro instruments should be encouraged to adopt a procedure which clearly identifies caged instruments and provides instructions for fully unlocking the mechanism.

34-9. REPAIR AND OVERHAUL INFORMATION - INSTRUMENTS. Numerous complaints have been received from Approved Instrument Repair Stations that they are unable to obtain overhaul and calibration data on certain aircraft instruments which are identified with the airframe manufacturers' part number.

This situation also exists on some instruments which are modified by or for the airframe manufacturer. As a result, the original basic instrument has lost its identity and therefore cannot be overhauled or calibrated in service in accordance with the original overhaul or maintenance information.

Cessna Aircraft Company is making available many vendor manuals and will have more which will eventually cover all instruments and equipment they consider repairable. All of these publications will be available through local Cessna dealers.

It is quite possible other airframe manufacturers have also prepared data regarding the maintenance of instruments installed in the aircraft they produce. Therefore, it is suggested that any questions which may arise regarding instruments in a certain make and model aircraft be referred to persons having the dealership for the aircraft involved.

34-10. MAGNETIC DIRECTION INDICATORS. From time to time inquiries are received as to whether a remote indicating compass can be used in lieu of a direct reading magnetic compass to meet the requirements of FARs 23.1303 and 23.1327.

The term "Magnetic Direction Indicator" applies to all types of magnetic direction indicators, stabilized and nonstabilized, including remote-indicating and direct-reading compasses.

FARs 23.1303 or 23.1327 do not specify that the Magnetic Direction Indicator be direct reading, isolated from a power source, etc.; therefore, a compass with its magnetic sensor remotely located is acceptable.

Recommendations that a direct reading compass be kept as a backup in case of a power failure to the remote compass are sound but are not enforceable. Both FAR 23.1303 and FAR 91.33 require a "Magnetic Direction Indicator"; however, for IFR operation of an aircraft, FAR 91.33(d)(9) imposes an additional requirement for a gyroscopic direction indicator.

34-11 WILCOX ELECTRIC COMPANY MODEL 806A/806C VOR NAVIGATION RECEIVER. This revision is issued to provide updated information relative to this receiver and to advise that there is a significant number of these receivers remaining in use that have not been modified in accordance with Wilcox Electric Company Service Bulletin 806A dated January 31, 1969. These unmodified receivers are susceptible to the problems noted below and the recommended restrictions are applicable.

a. During operational use of this receiver, pilots may observe brief course needle oscillations and RMI variations (but not reversals) with some flicker (but not reversal) of the "TO-FROM" indicator similar to the indication of approaching the station. This may or may not be associated with "flag alarm" activity. This erratic operation is caused by interference from reflected VOR signals due to terrain irregularities or objects such as buildings, power-lines, etc., and is most likely to be encountered at relatively low altitudes. This bulletin reiterates the request that inspectors alert all known users of this receiver that this condition may occur. It requests that owners and operators of aircraft equipped with this model receiver:

(1) Restrict the use of these receivers to en route navigation with position confirmed by radar or DME prior to altitude changes in conformity with ATC clearances and

(2) Restrict VOR instrument approaches to only those based on DME information or where station passage is confirmed by radar.

b. The restrictions in a(1) and (2) do not apply to aircraft equipped with receivers modified in accordance with Wilcox Electric Company Service Bulletin No. 806A-18 dated January 31, 1969.

c. The test procuedure for determining reflection interference is as follows:

(1) Alternatives. In FAA testing, the following equipment and procedure have been found satisfactory. Other equipment and/or procedure, which gives equivalent results, may be used, and may be required to achieve valid results with various receiver designs.

(2) Test equipment.

(a) VOR signal generator

1 Boonton 211A RF
2 Collins 479 S3 AF

(b) Diode Modulator - Hewlett-Packard 10514A Mixer
(c) Audio Oscillator - WAVETEK 103 Function Generator
(d) 6 DB pad
(e) Vacuum Tube Voltmeter
(f) Milliammeter

(3) Procedure.

(a) Set up test equipment as shown in Figure 1.

(b) Insert a standard VOR signal, and set 211A attenuator to 400 µv output.

(c) Adjust battery bias to obtain 12 db loss through H-P 10514A mixer (0.75 m.a. current was necessary in FAA testing).

(d) Using VTVM, measure the level of the 30 Hz variable AM modulation in the 30 Hz channel of the VOR receiver (primary of output transformer).

(e) Turn off 30 Hz variable AM modulation from VOR audio source.

(f) Set audio oscillator output to 1/3 of the value measured in Step (4) to obtain 10% modulation. Restore to 30 Hz AM.

(g) Vary audio oscillator frequency from 5 to 25 Hz in 1 Hz steps, and from 25 to 100 Hz in 5 Hz steps. Ignore readings at 10, 15, 30, 60, and 90 Hz (± 2 Hz); test at 12 Hz.

(h) At each step, restore 10% modulation as necessary, and measure the amount of deflection by recentering the OBS or VOR audio source bearing selector. This procedure gives the amount of error in the manual channel. Recenter VOR audio source bearing selector to measure error in automatic channel. Consider the average of instrument oscillations.

(4) Tolerance. A VOR receiver is not susceptible to reflection interference of the kind described in para. a if, using this test procedure, the bearing error is found to be not more than ± 2 degrees in the manual channel and not more than ± 5 degrees in the automatic channel.

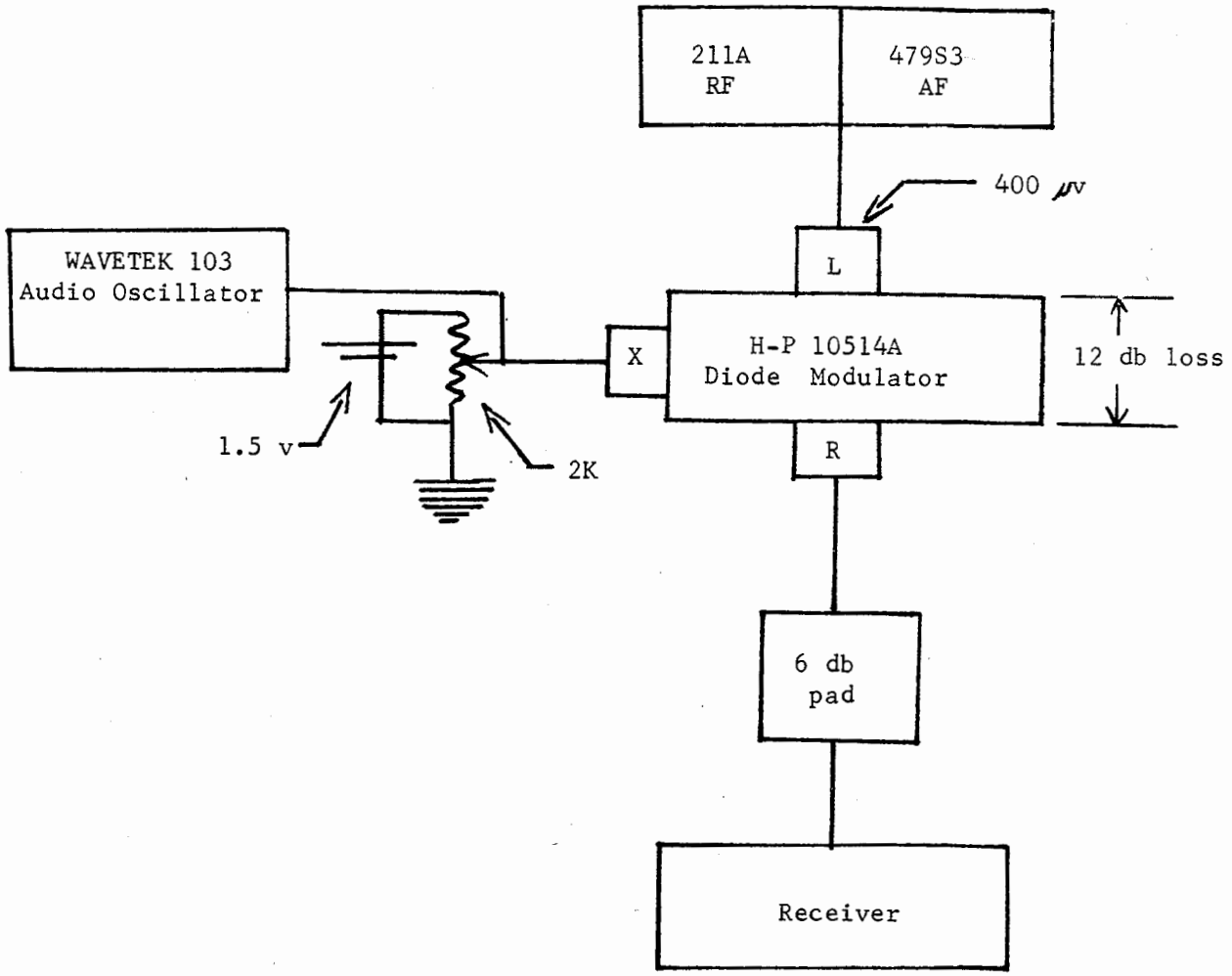

FIGURE 1.

34-12. MAINTENANCE OF AIRBORNE WEATHER AVOIDANCE RADAR. A 1972 study by the National Transportation Safety Board, published as Safety Bulletin 72-14, revealed that one in every five aircraft accidents involved turbulence. It also stated that approximately one in every eight air carrier accidents, over a six-year period, occurred in or near convective activity. The Board concluded that "a properly operating and properly operated airborne weather avoidance radar set is an invaluable tool."

Avionics inspectors, in their day-to-day contact with aircraft owners and operators, should emphasize the importance of airborne weather avoidance radar, the necessity for periodic maintenance, and the importance of proper operation of the equipment to be able to detect turbulent areas.

34-13. BOEING 707 ATC TRANSPONDER OPERATION. The standard location of the transponder beacon antenna on certain Boeing 707 series aircraft may possibly result in unsatisfactory radiation patterns, particularly when the aircraft is headed away from a ground facility.

This discrepancy could manifest itself in several forms, among which might be a rapid fade of the aircraft target from the ground station scope or failure of the ground station to pick up the aircraft transponder signal immediately after takeoff.

One 707 operator found that lowering the aircraft transponder beacon antenna approximately two and one-half inches resulted in definite improvement in ATC transponder operation.

This bulletin has been prepared as a matter of information for inspectors assigned to carriers operating Boeing 707 or similar aircraft.

34-14. BOEING B-727 AIRCRAFT - VOR FLUSH-MOUNTED ANTENNAS. An air carrier experienced a lengthy history of VOR system problems on three B-727 aircraft. Chronic pilot reports of intermittent, weak, erratic, and unreliable in-flight VOR operation could not be duplicated during ground testing. Normally, only one system was affected, but occasionally both systems were reported as malfunctioning. On all three aircraft the problem was traced to a corrosion build-up on the flush-mounted VOR antennas. The three aircraft had the following times in service and corrosion problems when the chronic VOR malfunctions occurred:

a. Aircraft No. 1, 10,000 hours TSN. Corrosion was found between the antenna plates and the airframe structure and between plates and their respective pick-up assemblies.

b. Aircraft No. 2, 300 hours TSN. Corrosion was found between the pick-up assemblies and the antenna plates. Additionally, one-half of the circumference of the left antenna structure mounting was coated with zinc chromate.

c. Aircraft No. 3 was newly delivered from the Boeing Aircraft Company. Corrosion was found on the antenna surfaces at the attach points, and zinc chromate was found on some back plates of the antenna cavity.

Providing proper bonding by removal of the corrosion, zinc chromate primer, and replacement of the antennas solved the VOR system problems.

The carrier has attributed the corrosion problem to the entrance of deicer and cleaning fluids around the antenna and the horizontal stabilizer,contacting the unprotected surface of the antenna plate. A fleet campaign of their B-727 aircraft was conducted to inspect the mounting area for signs of corrosion and to apply a coating of Alodine 1000 between the pick-up assembly and the antenna plate.

The B-707 is equipped with the same antenna as the B-727,but there has not been any problem reported on this model aircraft. This has been attributed to the location of the VOR antenna, being above the horizontal stabilizer.

Principal Avionics Inspectors should advise their respective carriers and alert them to the potential problem areas on new aircraft, as well as those that have been in service for long periods of time.

34-15. BOEING MODEL 747 AIRCRAFT - PITOT-STATIC SYSTEM. There have been several reported incidents of pitot-static system water entrapment in sufficient quantities to cause erroneous readings on instruments associated with the central air data computer.

a. Water accumulation may have occurred from failure to use pitot-static covers while washing the aircraft or from precipitation.

b. Inspection revealed the pitot-static tubing is installed in such a manner that the system is not self-draining.

c. All operators using Boeing Model 747 aircraft should be advised of this potential hazard.

34-16. BOEING MODEL 747 AIRCRAFT - INERTIAL NAVIGATION SYSTEM DAMAGE. Substitution of Ledex relay P/N 175096-001 for P/N 172964-001 resulted in damage to the Inertial Navigation System.

a. Ledex relays having the identical physical dimensions are not necessarily electrically interchangeable.

b. Two operators of Boeing Model 747 aircraft have released maintenance advisories cautioning personnel working on the P73 Flight Instrument Switching Panel that relay replacement is to be accomplished by part number comparison and physical dimensions are not to be depended upon for interchangeability.

c. The Boeing Company has notified their field representatives of this happening.

d. All operators using Boeing Model 747 aircraft should be advised of this potential hazard.

34-17. McDONNELL DOUGLAS DC-8-62 AND -62F AIRCRAFT -- CRUSHED STATIC LINES. Routine baggage loading in the forward cargo bin can result in crushed static lines. In one instance, the line near the static ports at fuselage station 365 was flattened by the weight of cargo against the sidewall lining.

a. The operator involved promptly accomplished a fleet campaign to check for occurrences of a similar nature. In addition, their engineering staff issued an authorization to install protective covers over the static lines.

b. McDonnell Douglas has prepared a service bulletin and modification kit to resolve the problem.

34-18. GABLES-RADIO CONTROL PANELS - FREQUENCY SELECTOR COUNTERS. An investigation of a Dual VOR failure revealed the frequency selector counters in Gables radio control panels malfunctioned because of pinion gear failure.

a. The operator's records showed a long history of pinion gear failures on five different types of Gables units. For example, the G-1829 type showed that 35 percent of 154 removals were attributed to pinion gear failure.

b. Gables engineering has instituted a manufacturing change to install dual pinion gears and lighter weight fractional dials to eliminate the breakdown due to excessive rotation speeds. All new and overhauled fractional counters will include this modification.

c. Gables does not approve or recommend overhaul of these parts in the field; however, they will overhaul the whole megacycle of the fractional megacycle counter for a nominal service charge regardless of age or condition.

34-19. RADIO FREQUENCY INTERFERENCE (FRI) EXPERIENCED WITH KING KI-213 AND KI-214 GLIDESLOPE/OMNI BEARING SELECTOR/ILS INDICATORS.

A new aircraft was noted to have a King KX-175B Nav-Com unit, a KI-214 head (indicator plus integral glideslope receiver), and a Genave Alpha 200 installed. A functional check showed that when either transmitter was tuned below 124.0 MHz and keyed, the glideslope needle was biased downward and the flag disappeared. The cause proved to be radio frequency interference (RFI) and was corrected by compliance with King Installation Bulletin No. 54.

a. This bulletin recommends an optional King filter for severe cases of RFI. The filter piggybacks on the KI-214 indicator and removal of this unit for replacement purposes could result in loss of filtering capability.

b. RFI may occur as a result of poor/improper installation, shielding and bonding or grounding. The problem may come and go by the replacement of units, transmitter retuning, or a change of the electrical features of the aircraft.

c. Avionics inspectors should encourage users of the King 213/214 indicators to be alert to symptoms of RFI and comply with King Installation Bulletin No. 54 and/or King Service Bulletins KI-213-1/KI-214-1, which are referenced therein.

*34-20. BOEING MODEL 737 AIRCRAFT - PITOT STATIC SYSTEM.
Operators of Boeing Model 737 aircraft have encountered erratic instrument indications during flight after the airplanes have been parked on the ground during heavy rain and high wind conditions. One aircraft was reported to have struck trees during a night approach due to erratic instrument operation. This erratic operation was caused by water in the pitot-static system.

a. The Boeing Company has issued Service Bulletin 737-34-1031 to prevent the water intrusion problem. Compliance with this service bulletin is highly recommended at the earliest practical time. Good safety practices dictate the need to assure that maintenance and operating crews are aware of the need to drain pitot-static systems at appropriate times.

b. Until the Service Bulletin is accomplished it is recommended that B-737 aircraft pitot-static systems be drained at repetitive intervals, not to exceed 300 flight hours. The system should also be drained prior to the first flight after the airplane has been exposed to a prolonged ground time in heavy precipitation and high winds such as accompany monsoonal or thunderstorm conditions.

*

c. Inspectors should assure that operators of Boeing Model 737 aircraft have been made aware of this possible problem area and that adequate safety precautions have been established until Service Bulletin 737-34-1031 has been complied with. An Airworthiness Directive published in the Federal Register as Docket No. 74-NW-4-AD Amendment 39-1969, September 19, 1974, page 33689, provides additional details.

34-21. MARKER BEACON ANTENNA MODEL AT 536/ARN. Reports of poor outer marker beacon facility performance were attributed to inadequate response by the aircraft marker beacon antenna system.

* a. An investigation revealed the fault was caused by the Miller Model AT 536/ARN antenna that is installed on Boeing Model 727 and 747 aircraft. The antenna gradually detunes with age and therefore responds poorly to the signal radiated from the outer marker that is situated at a location on the aircraft where altitude and air speed are high enough to result in a low signal level at the marker beacon receiver.

b. To determine and correct this deficiency, procedures were initiated by the affected carrier to perform antenna standing wave ratio (SWR) tests at specified intervals. The problem may also be determined by a ramp test unit placed near the aircraft nose. A normally operating system will respond at this distance.

c. Inspectors should determine that all operators using aircraft equipped with AT 536/ARN antennas have a program for detecting correcting deteriorating antenna performance. *

* 34-22. BOEING MODEL 747 AIRCRAFT - PITOT-STATIC SYSTEM. Operators of Boeing Model 747 aircraft have encountered erratic flight instrument indications during flight. This erratic operation may be caused by water in the pitot-static system.

a. The Boeing Company has issued Service Bulletin 747-34-2058 which should minimize the water intrusion problem. Prior to compliance with applicable parts of this service bulletin, good safety practices dictate the need to assure that maintenance and operating crews are aware of the need to drain pitot-static systems at appropriate times.

b. It is recommended that B-747 aircraft pitot-static systems be drained at repetitive intervals, not to exceed "B" check times or the nearest equivalent maintenance check. The system should also be drained prior to the first flight after the airplane has been exposed to a prolonged ground time in heavy precipitation and high winds, such as accompany monsoonal or thunderstorm conditions. *

c. Inspectors should assure that operators of Boeing Model 747 aircraft have been made aware of this possible problem area and that adequate pitot-static drainage procedures have been established. After compliance with the appropriate parts of Boeing Service Bulletin 747-34-2058, the pitot-static system drain checks could be scheduled to "C" check times as recommended by the Boeing Company.

*34-23. BOEING MODEL 727-200A AIRCRAFT - VOR INTERFERENCE. An operator using a B-727-200A aircraft experienced two instances where both VOR receivers were rendered inoperative due to static interference. One incident occurred while operating in icing conditions and the other in the area of thunderstorms. In both cases the VOR's displayed erratic pointer indications, intermittent flag operations, and loud audio static. These conditions existed to the extent of rendering both VOR systems unusable for a period of 20 minutes duration.

This static noise was not evident in the VHF communications systems, which led to the investigation of the bonding wires on the tail section of the aircraft located in close proximity to the VOR antennas. The problem was corrected by installing 23 missing bonding wires on the tail control surfaces. Although some bonding wires were installed on part of the surfaces, the elevator trim tab and both rudder trim tabs had none. This aircraft was delivered with the bonding wires missing. Therefore, other B-727-200A aircraft may have been delivered with the bonding wires missing.

It is recommended that all operators using Boeing Model 727-200A aircraft be advised of this potential problem which may affect the VOR system operation.

34-24. ANGLE-OF-ATTACK SENSORS - DC-10 One carrier reported that both angle-of-attack sensors failed to warn when required. Shop findings confirmed that one unit had frozen bearings, the other unit, although self tested (BITE) would not rotate during a wind-tunnel test.

The carrier has established a periodic wind-tunnel check which will rotate the sensors. This check, accomplished on the aircraft, will assure the integrity of both the pick-off coils and the condition of the bearings.

Inspectors should evaluate the maintenance/inspection program of their respective carriers to determine if current practices do in fact determine the integrity of the total system. This determination should be made on all aircraft using angle-of-attack instrumentation. If BITE does not make a total evaluation of the system, the discrepancies noted should be brought to the attention of the operator with requests for maintenance program changes. *

34-25. VOR/LOC DORNE AND MARGOLIN ANTENNA. It has been brought to our attention that the BAC 1-11 (200 and 400 series) using the Dorne and Margolin VOR/LOC antenna DM-N4-15 has experienced intermittent or erratic indication of localizer deviations. These erratic localizer deviations have been caused by unsatisfactory or intermittent electrical bonding of the antenna elements, and between the elements and the airframe. These deviations can also occur when the co-ax lines are subjected to Skydrol soaking.

Dorne and Margolin, Inc., has issued Service Bulletin 34-DM-N4-15-001 which outlines the necessary corrective action. This bulletin also states that these VOR/LOC antenna systems require scheduled inspection to assure the integrity of the system. The recommended inspection period is two years or 6000 hours whichever occurs first.

It is recommended that this bulletin be brought to the attention of those operators who operate BAC 1-11 (200 or 400 series).

*34-26. GROUND PROXIMITY WARNING SYSTEM. Service experience with the Ground Proximity Warning System has shown that many failures have been due to handling of the complementary metal oxide semi-conductor (CMOS) circuits. Failures have resulted from exposing these sensitive circuits to electrostatic voltages or other differences of potential in test and/or assembly.

Procedures normally used to protect semi-conductors are not adequate for protection of MOS type components due to the very high electrical resistance of these devices. The source which most commonly destroys MOS devices is the human body, and voltages of 20,000 volts may be developed by merely walking across the floor. Significant potential differences may be developed at the work bench in handling of ungrounded test equipment and tools.

In order to adequately protect MOS devices precautions normally used for semi-conductors should be followed. In addition, no two objects, including fingers, test equipment, and tools should simultaneously contact an MOS device unless they have first been placed in electrical contact with each other. This contact should have a resistance path of one megohm or less and be maintained for several seconds prior to contact with the MOS device.

Virtually all semi-conductor devices exhibit the above susceptibility to some degree, and it is recommended that all avionics maintenance facilities be reminded of the importance of using proper techniques in handling semi-conductors. *

*34-27. FALCON MODEL 20 AIRCRAFT - VOR INTERFERENCE. An operator of a Falcon 20 aircraft experienced several occurrences of sporadic VOR needle excursions and loss of receiver sensitivity caused by static electricity build up on the rotating beacon assembly. The beacon assembly is mounted on the VOR antenna fiberglass housing on top of the vertical fin. The VOR interference was significantly reduced or eliminated by adding a grounding strap from the beacon assembly to the aircraft structure. It is recommended that operators of Falcon Model 20 aircraft be advised of this potential problem which may affect VOR system operation.

34-28. COLLINS RADIO GROUP MODEL 51RV-1 VOR/ILS NAVIGATION RECEIVER. Some 51RV-1 users have reported variations in localizer deviation during an on-course approach to one ILS facility. The approach to this facility was such that large undesired signal levels in the 30,000 to 37,000 microvolt range (0.6 MHz from the selected frequency) were present while the desired signal level was in the 300 to 350 microvolt range. Also, the phase of the audio modulation on the undesired and desired signals varied constantly. Such a large undesired-to-desired signal ratio, high levels of undesired signal, and changing phase relationship may cause some 51RV-1 navigation receivers to exhibit variations in on-course indications (deviations) due to the effects of cross modulation.

a. In addition, a second 51RV-1 user reported interference to ILS signals while making on-course approaches to another facility. The interfering signals were received from an FM broadcast station operating at a level of 100,000 watts effective radiated power, 0.6 MHz removed from the localizer frequency. The interfering signal caused difficulty in localizer identification with frequent peeping flags and audible music and voice programming. Bench checks revealed the 51RV-1 receiver had deteriorated from inservice operation and no longer met TSO cross modulation requirements.

b. Collins Radio Group has issued Service Bulletin No. 36 which assures the 51RV-1 cross modulation protection is at an optimum level. In addition, the provisions of this service bulletin were incorporated in the Collins 51RV-1 VOR/ILS Overhaul Manual, Revision No. 10.

c. Inspectors should encourage users of the 51RV-1 receivers to be alert to the symptoms of cross modulation, and comply with Collins Service Bulletin No. 36. Also emphasize the adverse effects of using equipment that has deteriorated. *

34-29. EQUIPMENT REQUIREMENTS: AIRCRAFT CARRYING PASSENGERS UNDER IFR - SECTION 135.163(h).

a. Information received has disclosed that dual flight director indicators are receiving power from the same electrical bus.

b. FAR Section 135.163(h) indicates, in part, that no person may operate an aircraft under IFR, carrying passengers, unless it has two independent sources of energy, each of which is able to drive all gyroscopic instruments and installed so that failure of one instrument or source does not interfere with the energy supply to the remaining instruments or the other energy source.

c. It is the responsibility of the avionics inspector to ensure that installations which do not comply with the requirements of FAR Section 135.163(h) are not being used in air taxi IFR passenger operations.

* 34-30. USE OF INTEGRAL VIBRATOR WITH COUNTER-DRUM-POINTER PNEUMATIC * ALTIMETERS DURING FRICTION TESTING.

a. Paragraph 5.2 of Aeronautical Standard 392C, the specification called out by TSO-C10b, and Federal Aviation Regulations (FAR) 43, Appendix E, Paragraph (b)(1), both state that all tests for performance (of altimeters) may be conducted with the instrument subjected to external vibration.

b. Altimeters employing an integral vibrator may have their integral vibrator operating continuously during the friction test which is called out by the TSO-C10b standard and by FAR 43, Appendix E. Only the external vibration is required to be turned off during the applicable portion of the friction test.

c. It is noted that the external vibration (Paragraph 5.2) is enough to overcome any friction in the altimeter, so that an integral vibrator, without a vibrator failure monitor, would be acceptable under the TSO. It is also noted that the TSO standards are somewhat dated, and that instruments in jet transport aircraft are not subject to external vibration comparable to Paragraph 5.2 of TSO-C10b. Accordingly, altimeters approved under TSO-C10b should assure that the installation provides enough vibration to overcome the inherent friction of the altimeter, unless (1) an integral vibrator with a failure monitor is incorporated with the altimeter, or (2) the altimeter meets all performance requirements with no vibration to reduce friction effects.

*34-31. ALTERNATE STATIC PRESSURE SYSTEM REQUIREMENTS OF FAR 135.163.

a. Inquiries received from district offices have concerned the implementation of Federal Aviation Regulations (FAR) Section 135.163 with respect to aircraft having two independent static pressure systems.

b. FAR Section 135.163 states, in part, that no person may operate an aircraft under IFR, carrying passengers, unless it has an alternate source of static pressure for the altimeter and the airspeed and vertical speed indicators.

c. It has been determined that two independent static pressure systems such as installed in the Lear Jet aircraft are considered adequate to meet the alternate static pressure requirements of FAR Section 135.163, provided a pilot and a copilot are flying the aircraft. The copilot may not be an autopilot. *

APPENDIX 15. OXYGEN (ATA CODE 3500)

35-1 PASSENGER SERVICE UNIT OXYGEN MASK DOORS. Instances have been brought to our attention where some passenger service unit (PSU) oxygen mask doors have failed to open after the system has been activated.

a. Cause. Failure to open was not caused by the door latching mechanism (which operated normally), but rather by a residue of what appeared to be an accumulation of dirt and nicotine between the door edge and the unit itself. This residue caused the doors to stick closed.

b. Cure. Where this has been experienced, cleaning the doors effectively corrected the problem.

c. Recommended action. Each principal maintenance inspector should examine his assigned operator's maintenance records and review his approved maintenance program to obtain the following information:

(1) How long a time period is involved before these units accumulate enough dirt and nicotine to cause the doors to stick closed?

(2) What is the approved time interval between operational checks, and/or at what intervals are the doors routinely opened and cleaned?

Answers to the above questions will indicate whether or not existing inspection intervals are realistic; whether or not they are frequent enough to prevent door "hang ups" due to an accumulation of dirt and nicotine.

d. Corrective action. Where it is determined that service time intervals are not satisfactory, they should be adjusted to assure proper door operation at all times.

35-2. OXYGEN SYSTEM LUBRICANTS. The Boeing Company has issued an information letter to all operators using their models 707, 720, and 737 aircraft. The following is quoted from their letter for your information and action as you deem appropriate.

"This letter expresses our concern relative to the importance of proper procedures and controls when accomplishing maintenance and servicing of aircraft oxygen systems. The purpose of this letter is to emphasize the importance of using only oxygen system lubricants approved by the component manufacturer for his product and specific points of application.

"Laboratory evaluation of two high pressure oxygen systems shutoff valves, damaged recently by internal explosion and burning, disclosed that an unauthorized silicone base lubricant was present in the valves. The internal explosion and burning in these two cases occurred during valve operation and did not rupture the valve housings. The fire did not propagate outside of the system; however, there was internal metal damage and bulging of the valve housings. Investigation of a third valve which had undergone overhaul similar to the burned valves indicated that a relatively large quantity of a silicone base lubricant was used internally. The ignition source has not been determined; however, it is felt that the silicone base lubricant contributed significantly to the burning. Silicone base lubricants are not approved for this application by the valve manufacturer. Silicone base lubricants are used for some applications in the low pressure part of oxygen systems and may be used in some specific applications in high pressure components where the lubricant would not be in contact with oxygen. In all cases, however, the recommendations of the component manufacturer regarding lubricants must be adhered to. There lubricants should be applied sparingly and not substituted for other component applications without prior concurrence from the component manufacturer.

"As a result of the above experience, it is recommended that each operator review his own maintenance practices and those of any agency accomplishing his oxygen component overhaul to assess the exposure to unapproved lubricants. Arrangements with Spares pools should also be reviewed for possible exposure. If lubricants other than those approved by the component manufacturers are found to exist, particularly in the high pressure portion of the oxygen system, it is recommended that the affected components be replaced and the adjacent part of the system inspected and cleaned."

35-3. HAZARDS - OXYGEN BOTTLES. A serious injury was incurred by a mechanic while filling a portable oxygen bottle. The portable oxygen bottle was placed in a safety cylinder and attached to the oxygen-filler manifold. When the manifold valve to the bottle was opened, a flash fire and explosion separated the regulator parts, outlet fittings, and a pressure-bleed fitting from the bonnet and the bonnet separated from the cylinder. Approximately 50 percent of the cylinder bonnet-retaining threads were burned away.

The mechanic suffered second- and third-degree burns of both arms, clavicle, and front shoulders. All the hair on his head was burned off, and one eye suffered burns. Although his injury was serious, it would have been more serious had he been struck by fragments when the explosion occurred. Some foreign combustible material must have entered into the bonnet of the bottle in the vicinity of the filter-fitting. Once combusion started, there was a rapid burning and melting of parts which resulted in the explosion when the oxygen-pressure was rapidly released. This occurrence serves as a reminder that oxygen is hazardous when proper precautions are not taken during refilling and handling of oxygen bottles.

The following procedures and precautions should be periodically checked:

a. Personnel should be properly trained and acquainted with the hazards in oxygen handling.

b. Cylinders should be carefully handled, proper racks should be provided to prevent tipping and damaging cylinders, and covers should be provided to protect valves during moving.

c. Area where oxygen is stored should not be subject to high temperatures.

d. Oil or grease is especially dangerous around oxygen. Precautions to keep these off the hands and clothing of personnel servicing oxygen equipment should be taken.

e. Smoking should be forbidden in the area of bottle-refilling.

f. The storage area should be well-ventilated.

g. Electrical fixtures should be explosion-proof.

h. Signs regarding oil and grease should be prominently displayed at the filling area.

i. Air carrier maintenance programs shall specify that the inspection, retest, and life-limit requirements for pressure cylinders used as aircraft equipment are, at a minimum, those set forth in DOT 49 CFR Part 173 and that these requirements are shown on the operations specifications.

Inspectors should determine that air carriers have procedures to ensure safe handling of oxygen, and a spot check should be made of the actual handling of oxygen cylinders and filling of bottles.

35-4. OXYGEN VALVE AND MANIFOLD SEAL DETERIORATION. Oxygen mask malfunctions involving valve diaphragms have been discovered in increasing numbers. Diaphragms age and crack to a degree that permits them to dimple or sag blocking the oxygen supply completely or significantly. One manufacturer guarantees the diaphragms for three years. However, there are aircraft flying with diaphragms in excess of seven years of age in service. Since oxygen masks are seldom used except in an emergency, deterioration presents a serious problem and causes all diaphragms over three years in service to be suspect. It is recommended that assigned inspectors bring this problem to the attention of their operators to assure that the appropriate maintenance procedures are adequate.

*35-5. EMERGENCY OXYGEN SYSTEMS PROBLEMS. During the investigation of a recent DC-10 engine failure and resulting cabin decompression, several discrepancies were noted in the emergency oxygen systems which may exist on other DC-10 aircraft and on other type aircraft. Investigation subsequent to the incident revealed that when the passengers emergency chemical oxygen system was activated, three canisters came out of their mountings in the seatback oxygen compartment and fell onto passenger seat cushions. Two of these canisters, which become very hot when operating, scorched the cushions and burned fingers when seat occupants tried to remove them. The third reportedly caused a small fire. It is believed the canisters came out of their mounting brackets because of the pulling force exerted on either the initiating lanyard of the canisters or the oxygen supply hose, and the fact that possibly the canisters were not held firmly in place by the mounting brackets. Additionally, it has been determined that approved packing procedures may not have been followed for the supply hoses and oxygen masks. Hoses were reported, in some cases, to be wrapped around mechanical projections and the heat shield making it difficult to remove the mask from its holder.

It is recommended that principal maintenance inspectors review their operators maintenance programs to determine that adequate inspection is provided in this area. If necessary, consideration should be given to increasing inspection frequencies.

Added information resulting from this same investigation disclosed that in some cases crew portable oxygen bottles may be stored separately from the mask and hose assemblies. *

The mask and hose assemblies were wrapped in plastic as well as the regulator portion of the bottle. This required unwrapping and assembling the two units before the bottle could be activated and used. This does not meet the intent of being "immediately available" as required by FAR 25.1447(c)(4). It is possible some aircraft were delivered to customers with bottles in this configuration.

Principal inspectors should ascertain that operators of DC-10 aircraft are in compliance with the DC-10 Maintenance Manual, Section 35-30-01, Page 201, Item 3(4), and that proper procedures are being followed. Operators of equipment other than DC-10 aircraft should be advised of this requirement as well.

*35-6. PORTABLE CHEMICAL OXYGEN UNITS, L-1011. There have been reports of portable oxygen units failing to operate when flight attendants attempted to use them. Subsequent investigations revealed that the units had been assembled without the actuator being reset and the percussion caps had not been fired. Also, there have been instances where the lock was damaged and jammed, evidently by trying to cock the actuator by pressing on the black lock button.

It is recommended that all personnel servicing this type portable oxygen unit be made aware of the following:

a. An actuator assembly installed without being recocked will not fire a new (replaced) generator.

b. The actuator assembly cannot be recocked without removing it from its mounting plate (observe instructions in the Scott Overhaul Manual, 35-31-07).

c. The lock only prevents the inner collar from moving to prevent inadvertent discharge of the generator. Pushing the black button on the lock will not recock the actuator. The black button should be depressed only AFTER recocking the actuator.

Figure 1 depicts the actuator in the cocked and in the fired positions.

Principal inspectors with L-1011 certificate responsibility should determine that the operator is aware of this problem *

* and that adequate instructions are provided to persons servicing this type oxygen equipment. Routine inspector surveillance should emphasize this item until it is determined that instructions are being complied with.

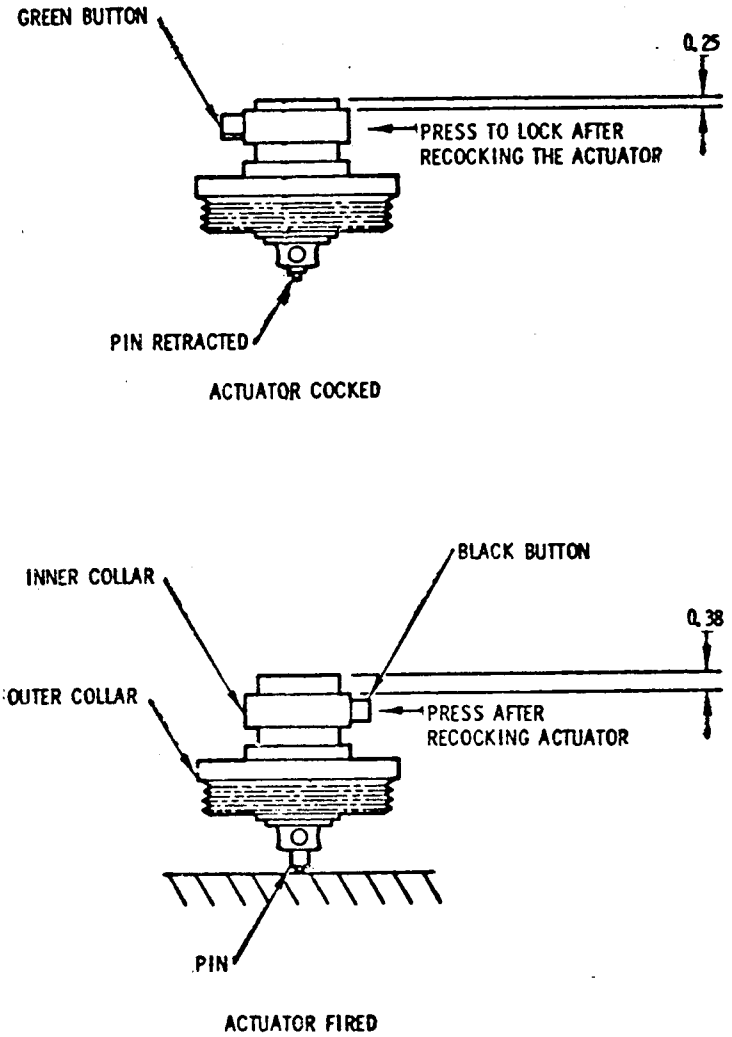

FIGURE 1. PORTABLE CHEMICAL OXYGEN UNIT ACTUATOR ASSEMBLY

*

*35-7. SERVICING AIRCRAFT OXYGEN SYSTEMS.

a. Recently, an air carrier received delivery of commercial or medical grade of breathing oxygen when aviators' breathing oxygen was ordered. Commercial or medical grades of oxygen may contain impurities such as moisture which is subject to freezing at low temperatures. The resultant ice may block the oxygen flow especially at high altitudes in unpressurized aircraft or in aircraft that have been "cold soaked" while on the ground in subfreezing temperatures.

b. When oxygen is supplied in high pressure cylinders, the cylinders in most instances are identified by a dark green color with a white band painted around the upper part and the words "oxygen aviators' breathing" stenciled in white letters. In this case the air carrier was receiving oxygen in cylinders identified by color other than dark green.

c. Aviators' breathing oxygen for use by flight crewmembers and passengers in aircraft is manufactured in accordance with Military Specifications (MIL) 0-27210 which specifies that the moisture content of aviation breathing oxygen must not exceed 0.005 milligram of water vapor per liter of gas at a temperature of 70°F and a pressure of 760 millimeters of mercury.

d. Principal airworthiness inspectors should ascertain that its assigned carrier(s) has a program that assures that aviators' breathing oxygen is being delivered and is aware of those procedures contained in Chapter 8 of Federal Aviation Administration (FAA) Advisory Circular 43.13-1A and Chapter 14 of FAA Advisory Circular 65-15A. *

APPENDIX 16. PNEUMATIC (ATA CODE 3600)

36-1. F-27/FH-227 AIRCRAFT - PNEUMATIC ISOLATION VALVE. Recently, an incident occurred wherein the flightcrew was unable to retract the landing gear. Investigation revealed that the aircraft was dispatched with the pneumatic system isolation valve in the closed position. The flightcrew failed to detect the open pneumatic door when entering the flight compartment.

The primary purpose of the isolation valve is to allow for maintenance of the pneumatically operated systems and to preserve air-bottle pressure in cases of serious leaks in the system. A safety lock is provided which prevents closing of the pneumatic panel door and should serve as a warning that the valve is not in its proper position. With the isolation valve "closed," all pneumatic systems except the emergency brakes and emergency geardown are lost.

In view of the seriousness of such incidents, we recommend that this information be brought to the attention of all F-27/FH-227 aircraft operators for action as necessary.

*36-2. B-747 AIRCRAFT - ENGINE BLEED AIR DISTRIBUTION SYSTEM.

a. Recently, an incident occurred on a B-747-120 aircraft wherein the engine bleed air duct at Wing Station 1108 in the left leading edge flapwell ruptured. Extreme hot air was directed to the engine control wire bundle resulting in the loss of wire insulation causing numerous problems with wires shorting and the circuit breakers to trip.

b. It is recommended that FAA inspectors bring this matter to the attention of their assigned operators and ascertain that detailed inspection frequency is adequate to detect possible bleed air duct failures. Since these ducts may be covered with insulation blankets, it may require removal of those blankets for the necessary inspection. *

*38-1. HAZARDS OF ICE ACCUMULATIONS SEPARATING FROM AIRCRAFT IN FLIGHT. Water leakage at the lavatory and potable water service fittings has resulted in ice accumulations and subsequent ice falling from the aircraft while in flight. Ice accumulation may separate from the aircraft due to weight of the massive ice build-up, and/or when the aircraft descends into warmer ambient air.

Reports on ice accumulation with separation include the following:

a. An ice chunk estimated at 30 pounds falling from an aircraft penetrated the garage roof of a private residence. Investigation of the aircraft records and interviews with servicing personnel on this matter revealed that ice on the potable water service fittings had to be chipped away before valve could be secured. The valve had been left open, the aft water tank was collapsed and a line had ruptured. There were no position markings, as required, to indicate servicing valve position and it was possible to close the service access door with the valve in the open position.

b. The separation of a turbojet engine from the aircraft at 33,000 feet was attributed to the stoppage of the engine first stage fan. Possible engine failure due to ingestion of ice accumulations could not be substantiated. However, waste water drain stains were traced from a leaking lavatory service door on the forward right lower fuselage, aft to a broken landing light lens and then over the wing directly in line with the failed engine inlet.

   Investigation of the aircraft records revealed previous incidents of damage to the right wing, leading edge flap, and broken landing light lens. The cause of this damage was not recorded.

   Investigation of forward lavatory drain revealed that the "donut plug" drain valve was not properly seated permitting waste water to leak from the tank during flight. For external leakage both the drain valve and the drain line cap must leak. The cap contains an inner seal and if in good condition should prevent leakage. Personnel who service the lavatory should assure that the "donut plug" has completely seated following each service operation.

Ice accumulation on the surface of an aircraft may adversely affect performance and control. Further, ice accumulation separation in flight creates a hazardous condition to personnel and property on the ground and may damage the wing, empennage and/or engine of the aircraft.

It is recommended that this information be brought to the attention of each certificate holder and encourage routine inspection of water service fittings, the drain line cap inner seal and proper valve operation. *

APPENDIX 19. AIRBORNE AUXILIARY (ATA CODE 4900)

49-1. DOUGLAS DC-9 SERIES AIRCRAFT - APU EXHAUST SYSTEM FAILURE. The collapse of three APU (auxiliary power unit) inner exhaust tailpipes resulting in the APU malfunctioning has been reported.

a. Investigation of a partially collapsed APU exhaust assembly indicated that buckling of the inner pipe had resulted from a compressive load.

(1) Misalignment of the two sections of the primary exhaust duct resulted in the inability of the inner pipe to slip linearly within the expansion joint when exposed to high exhaust gas temperatures. Contact between the two sections of the primary exhaust duct induced wear and cracking. The hole that developed in the duct allowed exhaust gases to pressurize the shroud, collapsing the upper elbow of the duct.

(2) In addition to duct damage, the exhaust shroud seal was damaged. Excessively high exhaust gas back-pressure forced the exhaust gases through the exhaust pipe shroud and into the APU enclosure, triggering the fire warning devices. Prompt detection of the overheat condition prevented any serious damage to the installation. Heat damage was evident in the APU enclosure, to the righthand access door and to the wiring in the area of the exhaust duct in the tail of the aircraft.

b. To prevent this condition on newer assemblies, Douglas Service Letter AOL-9 No. 139, dated September 29, 1967, revises the detail tolerances of the titanium outer shroud and stainless steel inner pipe. The following service publications should be examined for compliance:

(1) Service Bulletin 49-8, May 2, 1966, pertains to the installation of the new guide in the duct. Older aircraft may require compliance with this bulletin in conjunction with DSL AOL No. 139 above.

(2) Service Letter AOL-9 No. 74, February 9, 1967, relates to the alignment of the APU exhaust pipe and shroud. The letter was issued because several DC-9 operators had found discoloration on the outer shroud of the APU exhaust assembly. An investigation indicated that in some cases a mislocated index pin on the elbow assembly permitted the elbow to contact the shroud, resulting in a degradation of exhaust cooling capabilities.

(3) Douglas Service Bulletin 49-7, April 14, 1966, is concerned with the Janitrol coupling installed at the APU exhaust flange which failed on one occasion, creating exhaust leakage and scorching of the adjacent APU enclosure blanket. This modification replaces the existing coupling with an improved coupling.

c. It is recommended that all DC-9 operators be alerted to this condition and that their maintenance programs be reviewed to ensure adequate installation instructions in this area.

49-2. BOEING B-727 AIRCRAFT - FUEL VAPORS ENTERING THE CABIN FROM THE AUXILIARY POWER UNIT. An incident was reported wherein fuel vapors from an APU fuel line leak were drawn into the APU inlet and discharged into the cabin air conditioning system.

a. Investigation revealed that the fuel leak was caused by a damaged O-ring in the APU fuel inlet line at the fitting on the unit. Fuel vapors were allowed to enter the air conditioning system because of improper sealing, during overhaul, of the APU inlet attachment to the surrounding shroud structure.

b. The Boeing Company recommends that the sealing procedures specified in the B-727 Overhaul Manual, Section 49-10-01, page 513, be followed during overhaul. Additional information concerning the APU inlet sealing may be found in the latest Boeing 727 Maintenance Manual, Section 49-11-51, Figure 401.

49-3. MCDONNELL DOUGLAS MODEL DC-9 AIRCRAFT - FLUID INJESTION BY THE AUXILLIARY POWER UNIT. The following incidents occurred during ground operation of the APU. This information should be brought to the attention of all operators using McDonnell Douglas DC-9 aircraft.

a. Fumes in the cabin were traced to a hydraulic leak in the tail cone area. The hydraulic fluid drained overboard through the vents on the bottom of the fuselage aft of the APU air inlet.

b. Three incidents of fuel fumes in the cabin disclosed that the fuel had leaked from the APU fuel control unit drive seal or diaphragm. Fuel leakage exits overboard through a drain line adjacent to the left side of the APU air inlet.

c. In each incident fluid was drawn into the APU air inlet resulting in contamination of the bleed air used for air conditioning of the aircraft.

d. An improved diaphragm for the fuel control unit is available from AiResearch, and they also issued Service Bulletin No. 49/1923, dated November 6, 1970, Modification of APU Fuel Drainage Provisions to Prevent Oil Dilution, and Rev. 1 dated Feb. 5, 1971.

49-4. AIRCRAFT STRUCTURE, SYSTEMS, AND COMPONENTS SUBJECTED TO OVERHEAT CONDITIONS. A pneumatic duct failure occurred when an auxiliary power unit was being utilized to heat an unattended aircraft. The duct failure caused a fire extinguisher bottle to overheat and explode. The surrounding aircraft structure was subjected to heat.

a. To assure aircraft safety, an Airworthiness Directive was issued requiring the following action.

(1) The installation of placards specifying the immediate discharge of the fire extinguisher bottle if the overheat light illuminates.

NOTE: As the ambient temperature increases, the urgency for rapid discharging of the bottle becomes greater.

(2) If external pneumatic ground service or bleed air from the APU has been used for operation of the pneumatic system while the aircraft is unattended, check the cockpit bleed air wing-body overheat system and light for an overheat condition prior to flight. If an overheat condition is noted, an inspection of the aircraft structure, systems, and components must be accomplished.

b. Although the AD action pertains to a specific aircraft model, the structure and/or systems in any aircraft could be similarly damaged. It is recommended that operators be advised accordingly and encouraged to exercise caution when using installed or external auxiliary power units around unattended aircraft. In addition, it is suggested the assigned maintenance inspectors:

(1) Ascertain that the operator's maintenance program includes instructions for prevention of damage to fire extinguisher bottles, both in the aircraft and in storage.

(2) Determine that procedures for the detection of physical damage to fire extinguisher bottles (e.g., nicks and dents) are adequate as these defects may decrease bottle burst strength and create a hazard.

(3) Reevaluate inspection procedures relating to pneumatic ducts in order to verify the capability exists for detecting cracks and duct misalignment. Establish the validity of inspection frequencies as related to total accumulated operating times (both ground and flight operations).

49-5. BOEING B-737 AIRCRAFT - APU DRAIN LINE AND DRAIN CUP/MANIFOLD CONTAMINATION.

a. Recently an incident occurred wherein the flightcrew was unable to start the APU during approach. After the second attempt the APU firebell and warning light came on. The fire handle was pulled and a normal discharge was indicated; however, the light remained on. Emergency ground equipment met the aircraft on landing and reported a great deal of smoke coming out of the APU exhaust.

b. Investigation revealed that after the lower APU drain shroud was removed contamination was found in the drain line and drain cup/manifold. The contaminant consisted of a mixture of dust/dirt and kerosene which, when hardened, looked like a clay substance. Approximately one week prior to the incident, the APU drain lines had been inspected per an APU service card. Another aircraft was checked and the same condition was found.

c. A review of the procedures utilized to clean and inspect these lines, which was using compressed air, leads one to believe that the procedures were inadequate. The operator immediately issued a fleet campaign directive to clean the APU drain lines. They also have revised their service cards to provide for a more complete and comprehensive cleaning of the drain system using compressed air and a solvent.

d. Principal airworthiness inspectors should bring this information to the attention of their assigned operators. Inspectors should also review the maintenance manuals to assure that the cleaning procedures are adequate to preclude incidents of this nature.

APPENDIX 21. DOORS (ATA CODE 5200)

52-1. BOEING MODEL 747 SERIES AIRCRAFT - MAIN ENTRY DOOR LATCHING MECHANISM. Main entry doors have inadvertently opened during the landing roll in at least two instances.

a. Inspection of the door latching mechanism disclosed the upper and lower torque tube cranks did not travel "overcenter" sufficiently to ensure the mechanism would remain locked. Cabin pressurization will prevent the door from opening in flight. Without the overcenter locking provision, inadvertent door opening and slide inflation could possibly occur as a result of body deflection and deceleration loads during the landing roll or centrifugal loads when turning.

b. To ensure positive locking of the latch mechanism the Boeing Company has issued Service Bulletin No. 52-2064 entitled, "Main Entry Door Latching System Operation and Overcenter Check." This bulletin provides details regarding the procedures to be followed when checking the main entry door latching mechanisms for proper operation and correct adjustment.

c. Principal Maintenance Inspectors assigned to air carrier operators utilizing Boeing Model 747 aircraft should assure that the inspections prescribed by this service bulletin are contained in the operator's maintenance and inspection program. In addition, it should be ascertained that all main entry door latching mechanisms have been checked initially in accordance with this service bulletin and at some regular interval thereafter. Approximately once a year or each 3,000 to 4,000 hours of operation is recommended.

52-2. BOEING MODEL 747 AIRCRAFT - NO. 5 MAIN ENTRY DOOR STOP PIN AND BEARING REPLACEMENT. The Boeing Company has issued Service Bulletin 747-52-2062. The following is quoted from the service bulletin for your information and action as deemed appropriate.

a. The No. 5 main entry door is contained within contour by a series of adjustable stop pins installed in fittings attached to body structure. The stop pin/bearing plate combination reacts loads caused by cabin pressurization.

b. During fatigue testing, fatigue cracks were discovered in eight stop-pin fittings at the left and right No. 5 main entry door aft edge after approximately 31,000 equivalent flight hours. The cracks are attributed to secondary bending of the fitting caused by the high friction between the stop pin and bearing plate. Subsequent analysis indicates that fitting fatigue could start on some in-service airplanes as early as 15,000 flight hours. A cracked stop-pin fitting would require door removal for rework or extensive airplane down time for fitting replacement and would result in additional loading and accelerated fatigue damage on adjacent fittings along the aft edge of the door.

c. To reduce the possibility of fatigue cracking of the No. 5 main entry door aft side stop-pin fittings, the existing stop pin and bearing plate may be replaced. The new stop pin has an increased contact surface to better distribute the bearing loads, and the new bearing plate incorporates a Kahr-lon coating to reduce friction and minimize side loading of the fitting.

d. The operator is encouraged in his maintenance planning to incorporate this pin and bearing plate replacement as early as practical to ensure adequate fatigue life of door structure.

52-3. BOEING B-747 LOSS OF PNEUMATIC PANEL DOOR IN FLIGHT. The loss of pneumatic panel doors in flight has been reported. The cause is attributed to the improper rigging of the panel door. If, on latching, an edge of the panel door protrudes into the airstream, the panel may be blown off in flight. Operators should continue to observe the following:

a. Caution should be exercised in the maintenance and use of this panel.

b. Malfunctions and failures should be investigated and corrective action initiated as rapidly as possible to eliminate the trouble and prevent incidents.

52-4. BOEING 707-349C SERIES AIRCRAFT, MAIN CARGO DOOR SKIN RUPTURE. A B-707-349C aircraft experienced loss of pressurization at 25,000 feet due to skin rupture in the main cargo door. An emergency descent and landing were accomplished.

Ground examination of the structure revealed that an area of the fuselage external skin, between fuselage station 520 and fuselage station 560, in the main cargo door had peeled back. The skin had separated near the top of the door. This occurrence resulted in loss of cockpit/cabin pressurization.

The skin rupture is attributed to a fatigue crack which had nucleated in a rivet hole in the second row of fasteners below the piano hinge. Frames at fuselage stations 540, 550, and 560 were failed through top lightning hole. Nicotine stains at stations 540, 550, and 560 along fastener row indicated that partial cracking near frames had existed a long time.

With the cargo door open, the stain line is hidden. With the cargo door closed, a person standing on a cargo lift could see the stain area but at a flat angle. This area cannot be observed from a ground "walk around" inspection.

Boeing 707 Alert Bulletin dated September 29, 1970, provides recommended main cargo door skin inspection frequency. This bulletin also refers to B-707 Illustrated Parts Catalogue, Section 52/03, Figure 16.

52-5. DOUGLAS MODELS DC-9-10 AND -30 AIRCRAFT - REPLACEMENT OF DOORSTOP SETSCREWS. An operator reported that of five aircraft (three DC-9-10, two DC-9-30) three had broken doorstop setscrews, one was missing two setscrews, and one had one loose screw. Both DC-9-30 aircraft had broken setscrews. Repeated pressurization cycles reduce fatigue resistance to combined loads, and the setscrews either bend or fail, a characteristic most common to the forward passenger doors.

a. Cabin pressure produces loads on the door and adjacent fuselage structure, which imposes combined compression and bending loads on the doorstop setscrews. Relative lateral movement between the door and jamb subjects the setscrews to bending loads. Imprints on the doorstops indicate movements of one-half to three-quarters of setscrew diameter. Compression loads produced by cabin pressure on the door tend to loosen the jamb nuts. This permits the setscrews to turn and cause unequal load transmission from the doorstop through respective setscrews to the jamb.

b. Douglas Service Bulletin No. 53-69 covers these setscrews and their replacement. All the aircraft were in compliance at the factory, but inspection revealed that some of the new setscrews, 2923978-12 through -20 installations, have more than the specified .125 inch free length on the screw. The new setscrews, P/N 2923978-12 through -20, are made of higher strength material but the bending resistance may be improved by reducing the free-end length from the jamb nut to the screw end to .125 inch or less. This can be accomplished by installing AN 315 or AN 316 type nut (or combination), or P/N H-20 external wrenching nut.

c. Because of the potential hazard associated with structural damage that may result from loose or broken setscrews, we recommend that this condition be brought to the attention of all DC-9 operators. The operator's attention should be directed to Douglas Service Bulletin No. 53-69 and Douglas AOL 9-313, dated July 24, 1967, for information specifically related to this condition.

52-6. AIRCRAFT EMERGENCY EXITS. Instances of inoperable emergency exits continue to be reported. These occurrences are attributed to the the door or window binding within the frame and/or latching mechanisms which are very difficult to operate. Inasmuch as these are recurring reports, the necessity for proper operation of emergency evacuation exits cannot be overemphasized. As such, it is recommended that field personnel:

a. Reevaluate programs and procedures to assure that emergency exits (doors/windows) are opened and checked often enough to maintain continued serviceability and ease of operation.

b. Encourage the establishment of fixed schedules for the operational check of emergency exit doors and windows.

c. Assure these operational checks include procedures for inspection, cleaning, and lubrication of locking mechanisms.

d. Determine the adequacy and legibility of placards.

52-7 DC-10 CARGO DOOR SEALS. It has been observed by some maintenance inspectors that damage to DC-10 cargo door seals is occurring as a result of incorrect positioning of cargo loading equipment. Misalignment of the loader causes the cargo modules or containers to damage the seals.

It has also been reported that cargo handlers are frequently unaware of the significant role the seals have in the pressurization system. They are often of the opinion that the seals serve only to prevent moisture and dirt from entering the cargo compartments.

It is recommended that Air Carrier Training Programs include subject matter relative to the importance of proper loader positioning and that loading personnel be made aware of the importance of retaining seal integrity.

It is also recommended that the persons assigned the responsibility of closing cargo doors prior to flight should be called upon to extend their surveillance to include seal condition.

52-8 DC-10 FORWARD AVIONICS COMPARTMENT, LOWER ACCESS DOOR MISALIGNMENT. A DC-10 recently experienced a pressurization failure, which was found to be caused by misalignment of the lower access door to the forward avionics compartment. A condition exists which allows the door to be closed and locked yet can still be misaligned to allow overlapping of the door edge on one end and leaving a gap on the other.

McDonnell Douglas has issued Service Bulletin 52-83 to correct this condition. The modification replaces the lower access door aft roller bumper assemblies with longer ones.

Principal Maintenance Inspectors with DC-10 certificate responsibility should alert their carriers to this condition and assure that mechanical personnel are instructed on door closure and inspection procedures to prevent misalignment. Aircraft modification in accordance with DAC Service Bulletin 52-83 should also be recommended.

*52-9 DOUGLAS MODELS DC-8 AND DC-9 CARGO DOOR FITTING ATTACH BOLT CORROSION. One operator reported finding corrosion on numerous upper cargo door spool fitting attach bolts on DC-8 aircraft. Three of these bolts were reported broken. These failures were due to stress corrosion cracking in a region of severe pitting. The corrosion was attributed to entrapped moisture in the void between the bolts and spool attach fittings. This condition occurred on an aircraft having logged approximately 20,000 flight hours. The integrity of the latching/locking capability could be jeopardized if corrosion is allowed to continue. Replacing spool fitting attach bolts which have corrosion beyond acceptable limits and sealing boltheads and spool fittings will minimize the possibility of corrosion.

McDonnell Douglas issued Service Bulletin 52-78 on May 5,1975, and recommends that, within the next twelve months, the bolts be removed, *

inspected for corrosion, replaced as necessary, and sealant applied to exclude moisture. In addition, Douglas issued AOL 9-833 in 1974 concerning the same problem on the DC-9 aircraft.

Principal maintenance inspectors are to: (1) review their assigned operators' maintenance procedures and inspection intervals to determine whether or not they are adequate to assure the integrity of the door latching/locking capability and (2) take corrective action if need is indicated.

52-10. BOEING MODEL 747 AIRCRAFT - PASSENGER CABIN TO LOWER ELECTRICAL COMPARTMENT ACCESS DOOR.
An operator of a Boeing 747 aircraft was unable to open the lower electrical compartment access door from the passenger compartment. This was caused by the handle on the electronic compartment side of the door not properly retracting to the stowed position. Reference Boeing 747 Maintenance Manual, subject number 53-21-05.

A fleet campaign was accomplished and one other aircraft was found to have a binding lower handle. In both instances, the latch assemblies were found satisfactory, but in need of lubrication.

It is recommended that all operators of Boeing 747 aircraft be advised of this potential problem. In addition, their maintenance programs should be revised to include an area inspection of all electronic compartment access doors, exterior and interior, and provide appropriate lubrication at "C" check intervals.

*52-11. AIRCRAFT EMERGENCY EXIT PLACARDS - CORPORATE AIRCRAFT.
During the investigation of a corporate jet aircraft accident, a serious situation was uncovered. The passengers aboard the aircraft encountered severe difficulty in evacuating the aircraft because they lacked knowledge of emergency procedures; were not briefed by the crew before departure; and there were no placarded instructions for opening the main cabin door or the two overwing exits. Inasmuch as this could be a recurring situation, it is recommended that Flight Standards Airworthiness Inspectors:

a. Reevaluate operators' and repair/overhaul agencies' inspection programs and procedures to assure that emergency exits (doors, windows) are properly placarded after interior refurbishing.

b. Review installed emergency exit placards to ensure that adequate operating instructions are provided for positive operation in emergency situations. *

* 52-12. NIHON YS-11 AIRCRAFT INTERIOR OVERWING EXIT MARKINGS.

a. During the investigation of an accident involving a Nihon YS-11, investigators found that, when the instructions on the placard for opening the overwing emergency exit were followed, they had difficulty locating and releasing the catch referred to in the exit placard. The difficulty occurred because the handle and catch were painted the same color and neither handle nor catch were labeled. The exit operated without difficulty once the catch was identified and released. The investigators determined that, in an emergency, individuals unfamiliar with the exit operation could have difficulty locating the catch and opening the exit.

b. The Nihon YS-11 aircraft was certificated under Civil Air Regulations (CAR) 4b. Section 4b.362(f)(1), Emergency Exit Markings, states, in part, that "All passenger exits, their means of access, and their means of opening shall be marked conspicuously. The identity and location of the emergency exit operating handle and the instructions for opening shall be marked on or adjacent to the emergency exit and shall be readable from a distance of 30 inches."

c. Principal maintenance inspectors with Nihon YS-11 aircraft responsibility should assure that their assigned operators are aware of this problem and the need to mark the catches on all emergency exits so they are easily located and distinguishable from exit handles and other components. *

APPENDIX 22. FUSELAGE (ATA CODE 5300)

53-1. BELL MODEL 204B HELICOPTER - USE OF MILITARY UH-1B PARTS. Reliable sources have disclosed that some military UH-1B fuselages have been finding their way into civil supply channels. Since there is access to the UH-1B drawings, these parts have attracted the attention of some repair agencies seeking an economic advantage. From general appearances, the UH-1B and 204B fuselages seem readily interchangeable; however, an investigation by the Bell Helicopter Company shows there are at least 1,000 drawing differences, many being incorporated to meet the more stringent civil certification requirements of the model 204B. As a result of their investigation, it has been determined that the UH-1B and 204B fuselages are not interchangeable.

The following three items are outlined to aid FAA Maintenance Inspectors in determining whether a military UH-1B fuselage has actually been used to rebuild a damaged model 204B helicopter. The existence of these specific items does not, however, automatically assure that the fuselage used is a civil model 204B.

a. Upper left-hand tail boom attach fittings at fuselage bulkhead, station 195. Six rivets (.191-inch diameter Hi-Shear) are used in the left-hand vertical web. Two .250-inch diameter holes and one .191" diameter hole are located in the top web of the fitting. Two AN4 bolts and one AN509-10 screw are used in these holes after an engine mount fitting is installed on the deck.

b. Lower surface external doublers at B.L. 14.0 (left and right side from fuselage stations 149 to 83). There are three .063-inch thick external doublers of different lengths. These doublers are added to the caps of the main longitudinal beams. On the UH-1B, a single doubler is installed between fuselage stations 109.45 to 149.

c. Main longitudinal beam upper caps at B.L. 140.0. The upper caps of the main longitudinal beams (both left and right) have an internal doubler that extends from fuselage stations 118 to 132. This doubler is attached to the underside of the main beam cap using 11 rivets and 12 NAS 1218-08 screws. Although the doubler is not visible, the screw and rivet heads are readily apparent.

53-2. BOEING MODEL 747 AIRCRAFT - KEEL BEAM CENTER WEB REPLACEMENT BODY STATIONS 1265 TO 1350. The Boeing Company has issued Service Bulletin 747-53-2040. The following is quoted from the service bulletin for your information and action as you deem appropriate.

a. The inboard bulkhead of the wing gear wheel wells (Body Station 1265 to 1350) is an .063-inch thick center web (7075-T6 aluminum) reinforced with vertical stiffeners. The lower edge of this center web is attached to the keel beam box and the upper edge is secured to the lower surface of the pressure deck. The web carries shear loads across the wheel well area.

b. Several minor cracks, ranging from one to three inches long, were found in the center web panel at approximately 18,000 simulated flight-hours on the fatigue test airplane. These cracks originated from fastener holes common to the web and siiffeners and are attributed to localized stress induced by web buckling and vertical stiffener rolling.

c. To reduce the possibility of web structure cracking, the existing keel beam center web and associated stiffeners may be replaced with a two-piece machined center web and new stiffeners. The new center web has machined pads common to the vertical stiffeners which are twice as thick (.25 inch) as the existing web and has larger stiffeners installed to provide additional web rigidity. To further increase the web strength, the zee stiffeners are attached to the web with titanium bolts in place of rivets. Various bracketry for system components also require replacement.

d. To facilitate installation of the new center web assembly, the zee stiffeners, doublers, and miscellaneous system brackets have been jig-located and full-size holes drilled thru the web and applicable part. On Group I airplanes, the parts are temporarily attached (except doublers which are permanently attached) to the webs since gussets on the keel beam box prevent installation of the webs with these parts installed. On Group II airplanes, the parts are permanently installed since no gussets are installed on the keel beam box and therefore no interference exists.

e. If this modification is deferred, it is suggested that surveillance of the keel beam web be maintained during regular maintenance periods after the first major overhaul period. The area is readily visible from the body gear wheel well. Special attention should be given to the web near the upper and lower web chord fasteners. Cracks can be repaired in accordance with standard structural repair procedures. It should be noted, however, that repaired areas are exposed to recurring cracks and that new cracks could develop until the modification per this bulletin is incorporated.

53-3. McDONNELL DOUGLAS DC-9 SERIES AIRCRAFT - TAIL CONE SEPARATION. A DC-9 operator reported the loss of a tail cone during a normal landing. Investigation disclosed the separation occurred because the locking cable was not in its retaining hole which is located in the exterior release handle support assembly. To lock the tail cone latches in the closed position and prevent inadvertent release, the locking cable must be in position and properly secured.

It should be noted that a three-eighths inch outward movement of the exterior release handle will disengage the locking cable. Merely returning the handle to its normal position will not reinstall the cable and lock it in position. In addition, this installation has no provision on the exterior of the aircraft to indicate that the locking cable has been released.

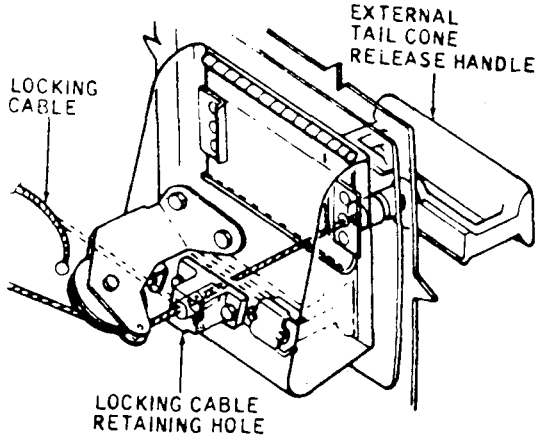

It is suggested that DC-9 operators provide a method to give a positive indication whenever the tail cone exterior release handle has been moved from its stowed position.

*53-4. McDONNELL DOUGLAS MODEL DC-9 AIRCRAFT - TAIL CONE FAILURE TO SEPARATE. During a stewardess training demonstration the tail cone failed to separate from the aircraft when the release mechanism was actuated.

Investigation revealed dried paint on the mating surfaces of the airframe and tail cone. The polyurethane paint flow ran into the joint line and bonded the cone to the airframe. Paint touchup by roller was utilized between complete aircraft painting periods.

A fleet campaign was initiated by the operator to assure that the problem did not exist on other Model DC-9 aircraft, and suitable precautions are being instituted to prevent recurrence.

This information should be brought to the attention of all operators using Model DC-9 aircraft, recommending they conduct periodic operational checks of the tail cone release mechanism to assure tail cone separation. *

53-5. B-727 CARGO COMPARTMENT - BLOWOUT PANELS.

a. A sixty-day review of one operator's B-727-100/200 series aircraft fleet revealed 66 reports of the lower forward cargo compartment blowout panels in the aft bulkhead blown out (ref. Boeing Maintenance Manual 25-52-0, page 1 and 10). The panels are provided to allow safe decompression of the cargo compartment should sudden decompression of the airplane take place.

b. It has also been observed that in at least one instance a flight was dispatched with a blowout panel missing from its proper position.

c. The lower forward cargo compartment is classified as a Class D compartment and with the blowout panels missing it no longer complies with the Class D criteria (ref. FAR 25.855(e) and 25.857(d)).

d. Operators of B-727-100/200 series aircraft and other Boeing series aircraft with these same panels should be reminded of the importance of these panels and the necessity for their being in place for each flight.

* 53-6. McDONNELL DOUGLAS MODEL DC-9 AIRCRAFT - AFT PRESSURE BULKHEAD ACOUSTIC COATING.

a. An operator of McDonnell Douglas Model DC-9 aircraft found evidence of heavy corrosion on the aft pressure bulkhead. Detection of the corrosion was hampered by a thick tar-like coating on the bulkhead which had been substituted for the normally installed acoustic blanket. Possibly other DC-9 operators have installed the tar-like coating in place of the acoustic blanket causing maintenance personnel similar difficulties in inspecting for cracks and corrosion under the coating.

b. The operator has removed the coating from the entire face of the pressure bulkhead and after the corroded areas were repaired, the original type acoustic blanket was installed. Evidence of corrosion was found at the ten o'clock position radially from the center of the bulkhead. It is believed that condensation/moisture trapped under the tar-like coating may have caused the corrosion.

c. McDonnell Douglas service information recommends inspection of this bulkhead for cracks/corrosion. The affected operator has developed a comprehensive inspection program for this area.

d. In at least one instance, a foreign operator's aircraft suffered a rapid decompression due to corrosion and failure in the bulkhead.

e. Inspectors should assure that all operators of DC-9 aircraft have procedures which are sufficient to detect cracks and corrosion underneath the tar-like substance or insulation blankets. *

* 53-7. FLUID LINES INSTALLED IN POWERPLANT DESIGNATED FIRE ZONES. It has come to our attention that fluid lines have been installed in powerplant designated fire zones that do not meet the basic fire resistant certification requirements of Civil Aeronautics Manual (CAM) 4b.483, and Federal Aviation Regulations (FAR) 121.259, 125.157, and 135.169. The most prevalent aircraft involved is the DC-6 as reported by one region. However, other type aircraft could be involved; therefore, principal maintenance inspectors should advise their assigned operators and maintenance facilities of the CAM and FAR requirements. *

APPENDIX 23. NACELLES/PYLONS (ATA CODE 5400)

54-1. McDONNELL DOUGLAS MODEL DC-10-10 AND -30 SERIES AIRCRAFT - ENGINE PYLON SUPPORT MEMBERS. There have been numerous reports of the engine pylon supports (hinge tees) cracking. Hinge tees, P/N AUB 7048-1 and -2, are used in the No. 1 and No. 3 wing pylon positions and hinge tee, P/N AVB 7010-29, is used in the tail, No. 2 position. Investigation has disclosed that improved parts have also cracked. Particular attention should be focused on inspection of the pylon supports (hinge tees) irrespective of what part numbers are installed. The structural integrity of the supports is affected when the hinge tees are cracked.

McDonnell Douglas has issued Service Bulletin 54-41 and All Operators Letters 10-685 and 10-485 which concern inspection criteria and describe the cause of the cracks.

a. It has been determined that failure to release the upper circumferential fan reverser door latch or exerting a force in excess of 70-inch torque input to open the door can result in cracking the pylon supports.

b. General Electric Company is in the process of releasing a new reverser door latch configuration which should eliminate the latch related cracks of the pylon supports.

c. Until the improved latch is installed, it is recommended that DC-10 operators be made aware of the foregoing.

d. Principal maintenance inspectors should assure that maintenance programs adequately cover inspections in this area.

54-2. BOEING MODEL 747 NACELLE STRUT MIDSPAR ATTACH FITTING STRUCTURE INSPECTIONS.

a. Increased emphasis on inspections of wide-body aircraft engine-to-wing attachment structure has brought to our attention that portions of the nacelle strut structure are more readily visible for inspection when the respective air-driven hydraulic pump drive unit is removed.

b. It is recommended that each operator's maintenance forms, utilized in hydraulic pump drive unit changes, should include a requirement for a detailed opportunity visual inspection. The inspection should include portions of the midspar nacelle strut structure that are more readily visible with the drive unit removed.

c. In order to improve the quality of inspections, it is requested that principal airworthiness inspectors bring this to the attention of their assigned operators.

*54-3. McDONNELL DOUGLAS MODEL DC-10 - INFLIGHT LOSS OF WING PYLON TRAILING EDGE FAIRING FORWARD PANEL.

a. An incident involving the inflight separation of a DC-10 pylon panel, Part Number AUB7036-27, was attributed to the backing out and loss of screws used to attach the panel.

b. The investigation determined that washers used under the screwheads shortened the length of the screws and affected screw-thread engagement. Also, the receptacle nut plates were found worn due to frequent removal and installation of the fastener screws.

c. It was revealed that other DC-10 operators may have also used dimpled washers under counter sink screwheads to compensate for nut plate hole elongation. The use of washers, which shorten screw length, combined with worn nut plates could cause screws to back out and result in the eventual loss of the panel.

d. The aircraft manufacturer issued telegraphic notice, DC-10-COM-42-GLB dated November 17, 1980, to all DC-10 operators recommending inspection of the nut plates at the next wing pylon fairing removal to ascertain continued serviceability of the threads and self-locking feature.

e. Principal airworthiness inspectors with DC-10 responsibility are requested to bring this to the attention of their assigned operators and make certain that their procedures include inspection of pylon fairing panel attachments for serviceability. *

APPENDIX 24. STABILIZERS (ATA CODE 5500)

* 55-1. CONVAIR 240/340/440 AND ALL MODIFIED MODELS - EMPENNAGE INSPECTIONS. Due to an incident involving loss of elevator control on one side and several reports of tail vibration (sometimes referred to as flutter or buffet in the Service Difficulty Reports (SDR's)), greater emphasis is needed on tail inspections.

a. Flight Control System

(1) Inspect rudder and elevator hinge brackets and fittings for condition, loose bushings, and security of attachment.

(2) Inspect rudder hinge bolts and elevator hinge pins for wear and looseness.

(3) Inspect leading edge of rudder and elevators for loose or broken balance weights.

(4) Check that the maximum "free play" at the trailing edge of all elevator and rudder trim and flight tabs does not exceed 0.10 inches. (Items (5) through (7) are related items.) On aircraft with a dual-rod elevator trim system (righthand elevator), there should be no free play at the trim tab trailing edge.

(5) Check elevator and rudder trim and flight tab rods for loose end fittings, bad bearings, and loose or missing jam nuts.

(6) Check for excessive end play in the elevator trim tab jack (righthand elevator). Maximum end play is 0.002 inches for both dual and single jacks.

(7) Inspect elevator and rudder trim tab-to-rod attach bolts for wear and looseness.

(8) Inspect elevator and rudder tab horns for security of attachment.

(9) Check rudder and elevator sealed balance curtains for holes and tears.

(10) Check elevator and rudder, and elevator and rudder tabs for distortion and alignment.

(11) Inspect horizontal and vertical stabilizer shrouds for security of attachment (loose screws).

(12) Inspect horizontal and vertical stabilizer shroud hinges for wear and noticeable looseness. *

* (13) Check for excessive or uneven gap between the horizontal stabilizer shrouds and elevators.

(14) Inspect rudder and elevator surfaces and tabs for loose screws and rivets.

(15) Check stabilizer attach fittings for condition and security.

b. Both Convair and the Allison Company have issued the following Service Bulletins and/or Service Letters which identified inspections and corrections of several of the above areas:

Convair

640(340D) S.B. No. 27-1 - Rudder and Elevator Hinge Pin and Bushing Assembly

640(340D) S.B. No. 55-1 - Stabilizers-Addition of Vertical and Horizontal Stabilizer Shroud

600(240D) S.B. No. 55-2 - Hinge Pin Retention Brackets

Newsletter No. 247 - Hinge Pin Installation-Rudder and Elevator

Allison

Service Letter PJCSL No. 26 - Inspection of Elevator Trim and Flight Tab Assembly

Service Letter PJCSL No. 37 - Elevator Hinge Pin

c. Principal airworthiness inspectors should assure that their assigned operators are made aware of this information. *

APPENDIX 26. WINGS (ATA CODE 5700)

57-1. BOEING MODEL 747 AIRCRAFT - WING TRAILING EDGE OUTBOARD FORE FLAP OUTBOARD SUPPORT LEVER AND TRACK REWORK. The Boeing Company has issued Service Bulletin 747-57-2080. The following is quoted from the service bulletin for your information and action as you deem appropriate.

a. The trailing edge outboard fore flaps are supported by four fore-flap track levers attached to track assemblies which extend into the mid flap. Two operators have reported three instances of a broken outboard support lever. One lever failed at approximately 3583 flight hours. The lever was replaced and failed again at 4635 flight hours. The third lever failed on an airplane with 5520 flight hours. In all instances, the cause of the failed levers resulted from a notch worn into the lever where the lever had contacted the upper inboard surface of the mating **fore flap track.** This interference can occur on some airplanes as a result of an accumulation of manufacturing tolerances.

b. A broken lever would allow the outboard end of the outboard fore flap to deflect upward and strike the wing trailing edge structure and cause possible damage to a trailing edge rib and the upper surface of the fore flap. Damage to the leading edge of the mid flap could also be sustained from contact with the broken lever.

c. To prevent possible damage to the outboard fore flap, mid flap, or wing trailing edge structure, it is suggested that a one-time check for interference at the upper inboard edge of the lever be accomplished on the outboard fore flap outboard track lever. If no chafing or rubbing is observed on the lever, no immediate action is required. If a notch is worn into the lever, the notch should be blended out and some material should be removed from the track in the area of contact with the lever.

d. Due to fore flap and mid flap installation tolerances, replacement or reinstallation of the flaps could alter the clearance between the fore flap outboard track and lever. Therefore, even though no interference presently exists, it is suggested that the track be reworked the next time the fore flap, track, or lever are removed to ensure adequate clearance between any combination of track and lever.

57-2. BOEING MODEL 747 AIRCRAFT - WING LOWER AFT SPLICE REINFORCEMENT - BBL 127.5. The Boeing Company has issued Service Bulletin 747-57-2071. The following is quoted for your information and action as you deem appropriate.

a. During 747 fatigue testing, several small fatigue cracks were discovered in the wing-to-body aft lower internal splice plate just outboard of BBL 127.5 at 18,000 simulated flight hours. Three cracks were found in the left side plate and two cracks were found in the right side plate. The cracks varied in length between .01 and .15 inch. No cracks have been reported on in-service airplanes.

b. Although testing verifies that a fairly large crack can be tolerated without affecting fail-safe capabilities, repair of cracks other than small ones would require extensive rework and airplane downtime.

c. To reduce the possibility of fatigue cracks in the wing lower internal splice plates, two external splice plates and 17 additional fasteners may be installed on each side prior to accumulation of 12,000 flight hours. The external splice plates are to be installed on the wing lower surface common to the two most aft internal splice plates covered by the wing-to-body fairing. The 17 new fasteners are to be installed common to the wing lower skin and internal splice plates between wing spanwise stringers 2 thru 19 just outboard of the wing-to-body rib (BBL 127.5 rib). Minor rework of the underwing outboard fairing and fairing support structure is also required.

d. To defer incorporation of this Service Bulletin 747-57-2071 to 15,000 flight hours, the 17 additional fasteners per side may be installed per Service Bulletin 747-57-2068, "Wing Lower Splice Plate Fastener Installation - BBL 127.5" prior to accumulation of 6,000 flight hours.

57-3. CONVAIR 240/340/440 AND MODIFIED MODELS WING SPLICE FITTINGS. Several operators reported finding corrosion on CV-240 aircraft wing panel splice fittings, part numbers 240-1610751-10 and -11, 240-1610753-10 and -11, 240-1410723-6 and -7, and 240-1410725-6 and -7. These fittings are located in the upper and lower spar rails of the panel splice, Station 15 bulkhead. In some instances, corrosion had advanced to such proportions that exfoliation of the fitting was taking place at the fasteners.

It is recommended that all operators using Convair 240/340/440 and modified models perform thorough inspections for evidence of corrosion of these fittings. It is suggested that the foregoing information be brought to the attention of all Convair operators.

57-4. McDONNELL DOUGLAS DC-8-62, -62F, -63, AND -63F AIRCRAFT - - WING SKIN/PYLON DOUBLER CRACKS. Cracks have occurred in the wing skin/pylon support doublers at each inboard pylon on two airplanes. In each case, the crack originated at the forward edge of the doubler where the inboard side of the inboard pylon intersects the wing front spar lower cap (wing station Xw-234.0). Ultrasonic inspection indicated that each of the cracks had progressed aft approximately 3/4 to 1 inch.

It has been tentatively concluded that the cracking of the doublers on these low-time aircraft was a result of a combination of stress corrosion and fatigue. The stress corrosion probably developed from the pre-stressing of the doubler during assembly and, therefore, can vary between airplanes. Due to the similarity in construction, there is reason to believe that the problem may also exist in the outboard pylon doublers.

McDonnell Douglas Service Bulletin No. A54-58 calls for an initial inspection of each affected airplane within 400 hours time in service and describes the procedures to be employed in that inspection (dye penetrant or ultrasonic). It is important to note that the dye penetrant method is used to find the cracks but, in this case, cannot be used to measure the extent of cracking. The ultrasonic method must be used if any evidence of cracking is found. The service bulletin also emphasizes the need to determine the direction in which a crack is progressing and establishes a limit for spanwise crack growth.

It is recommended that the assigned FAA inspectors discuss this matter with affected operators and encourage earliest possible compliance with the initial inspection provisions of Service Bulletin A54-58.

* 57-5. BOEING MODEL 707/720 WING SKIN INSPECTIONS.

a. As the 707/720 fleet continues to mature, additional cracks in the lower wing skin and stringers can be expected to occur. Airworthiness directives have been released to require periodic eddy current inspections of these members. However, in the past, fuel leaks have served as vivid indicators of cracked wing structure.

b. The load carrying capability of the wing structure will be compromised if cracks occur and are allowed to grow. Wing tank fuel leak indications should be thoroughly checked to assure the structural integrity of the wing. *

* c. Principal airworthiness inspectors with 707/720 responsibility are requested to bring this to the attention of their assigned operators. *

APPENDIX 27. PROPELLERS (ATA CODE 6100)

61-1. PROPELLER PITCH LOCK FAILURES - DOWTY ROTOL PROPELLERS - Failures of propeller pitch lock pistons have occurred on Dowty Rotol propellers installed on Rolls Royce Dart engines. These failures have resulted in inability of the pitch lock to reach the ground fine pitch position.

Modification of the propeller to preclude this type failure is described in Dowty Rotol Service Bulletin No. 61-231. Compliance with this bulletin should be recommended to operators of F-27A, Grumman G-159, and Vickers 810 Viscount aircraft.

61-2. CURTISS-WRIGHT C634S-C PROPELLER MALFUNCTION. Curtiss-Wright Model C634S-C propellers have malfunctioned due to improperly secured brake cage units. The brake assembly malfunctioned, permitting the propeller to go to or beyond the low pitch position and, in one case, a crash landing occurred during approach.

The difficulty involves those propellers that incorporate an early type brake assembly (P/N 142080-1) which includes a threaded type brake cage unit (P/N 106041). When not properly tightened and locked, the cage unit can back off, rendering the brake ineffective.

Curtiss-Wright Service Bulletin No. C-10 dated January 5, 1953, contains procedures for properly tightening this unit; and the Manufacturer's Service Manual No. 63 contains instruction for inspecting and adjusting the unit.

Assigned inspectors should bring this information to the attention of operators using Curtiss-Wright Model C634S-C propellers.

61-3. ALLISON-AEROPRODUCTS A6441FN-606, -606A PROPELLERS. As a result of corrosion found in propeller blades from which the balance cups had been removed, the FAA endorsed Allison reclamation procedues 1 and 2, dated June 11, 1965, and June 18, 1965, respectively. In addition, Allison issued Revision #39 to the -606 propeller Overhaul Manual, dated July 19, 1965. This revision involves changes to and/or refinements of procedures as a direct result of the propeller blade internal corrosion problem.

a. During November 1967, another case of internal blade corrosion was discovered. This occurrence involved a propeller overhauled by a foreign operator and purchased by a United States certificated air carrier. In this case, Allison recommended, with FAA concurrence, that all blades which could not be inspected through the cuff window (blades S/N 4000 and up) and which have had the balance cups removed be internally inspected for corrosion. The cuff window inspection on blades S/N 3999 and below was recommended to be performed on a daily basis.

b. Since it is likely that additional originally exported propellers will be purchased by United States operators, it is recommended that operators ascertain whether or not any such blades have had the balance cups removed. Blades S/N 4000 and above, which have had the cups removed, should be inspected internally in accordance with Allison overhaul procedures. Blades below S/N 4000 should be inspected through the cuff window on a daily basis until processed through overhaull and thereafter must be inspected in accordance with AD 65-5-1.

*61-4. DOWTY ROTOL PROPELLERS - PERIODIC INSPECTION OF HUB CONTACT SWITCH BRUSHES. An investigation of a recent Nihon YS-11A-200 accident revealed that both engines had been subjected to extremely high, destructive inflight temperatures, which concentrated in the turbine section of each engine.

The excessive temperatures in the turbines were attributed to a high-(cruise-pitch) stop hangup of both propellers while the aircraft was at low airspeed and entering a stall maneuver. The airplane was equipped with two 40-root-size Dowty Rotol R209/4-40-5/2 propellers. Two conditions permitted the high-stop hangup to occur:

(1) The cockpit high pressure fuel cock lever was in the "open" detent, instead of the "lockout" detent. (The latter is prescribed for low speed operation in flight and training manuals).

(2) Worn contact faces of two propeller high-stop hub contact switches.

With the high pressure fuel cock lever in the "open" position, the propeller high-stop can only be withdrawn electrically, and the electrical failure of the high-stop hub contact switches prohibited operation of the system.

The No. 2 propeller hub contact switches functioned normally; however, the switches must be operable on both propellers for the propeller stop system to function. Maintenance records indicated that the No. 1 propeller and its two high-stop hub contact switches had accumulated about 2,345 operational hours since overhaul. *

* According to the manufacturer's maintenance instructions, replacement of these switches is predicated upon their reaching a specified maximum wear limit. The wear rate should be monitored by periodic inspection of the switches. If higher-than-usual wear rates are detected, the operator is alerted to replace the switches before the wear exceeds maximum specified limits. These types of switches are also installed in 20-and 30-root size propellers.

It is recognized that the crew's nonadherance to prescribed procedures was involved in the accident sequence. It is believed, however, that the excessive wear of the contact switches was the underlying hazard that initiated the chain of events which led to the accident.

Principal Maintenance Inspectors are requested to:

(1) Emphasize to their assigned operators the importance of establishing appropriate inspection periods for hub contact switch brushes.

(2) Bring to the attention of their assigned operators the fact that they should note significant changes from normal flight patterns; e.g., crew training or reduced flight stages can considerably increase brush wear and thus necessitate more frequent inspections.

(3) Review with the operator the currently established inspection periods to ensure that propellers do not remain in service with brushes worn below the minimum permitted.

(4) Advise their assigned operators of the availability of pertinent service instructions in Dowty Rotol Service Bulletin 61-839, dated April 11, 1974.

61-5. BEECH MODEL 18 AND C45 AIRCRAFT - FULL FEATHERING PROPELLER/COWLING INTERFERENCE. Interference has been found to exist between the leading edge of the engine cowling and the trailing edge of the propeller blades when the propeller is in the feathered position.

a. The cowling installed on this aircraft is 3/8-inch longer than the cowling manufactured and installed on new airplanes after Model D18S, S/N A-31 or shipped as spares since 1945. Records available from the Beech Aircraft Company indicate the engine cowls were shortened, effective with that serial number, to provide clearance for the feathering propellers. This change moved the nose of the cowl aft with respect to the engine. The incorporation of the same change on the C45 series was not recorded and is consequently unknown; however, all C45G and earlier military airplanes were delivered with the long cowl. *

b. The type of propeller hub spider used can also result in an interference condition. If a long cowl is installed on an aircraft having a Hamilton Standard Model 22D30 propeller with a short spider, interference with the cowl can occur. If a short cowl is installed, blade-to-cowl clearance should be adequate with either the long or short spider hub. Hamilton Standard was contacted and provided information that the following propeller models had the long spider hubs: 22D30-313, -317, -323, -325, -355, -361 and -371.

c. It is possible this condition can exist on any Model 18 or C45 aircraft with full feathering propeller and/or cowling changes that have been made in the field. When either component is changed, clearance between the propeller blade and the cowl should be checked with the propeller in the feather position. If the clearance is less than one-half inch, the cause should be determined and corrected.

d. It is recommended that maintenance inspectors bring this matter to the attention of all owners/operators of subject model aircraft during routine inspections or surveillance.

*61-6. FIRE RESISTANCE INTEGRITY OF PROPELLER FEATHERING SYSTEM HOSE, DC-3 AND L-18 SERIES AIRCRAFT (REFERENCE AIRWORTHINESS DIRECTIVE 55-15-3).

Recent inspections of DC-3 series aircraft have revealed non-compliance with AD 55-15-3 in that the feathering hose assemblies in use were not compatible in integrity to hose assemblies listed in the AD.

Assemblies in use which were found to be in noncompliance were made up from Aeroquip Types 303-8 and -10 size hoses, which have PSI ratings of 2000 and 1750 respectively, with heat resistant sleeve to provide external equivalence. An acceptable assembly for sizes -8 and -10 would require the use of Aeroquip 309 hose which has a 3000 PSI rating. A hose assembly made up with this type hose would be identified as 309009 (Item C in AD 55-15-3).

It is suggested that the above information be made available to DC-3 and L-18 operators and repair agencies performing work on this type equipment. *

* 61-7 LOCKHEED MODEL L-188 AEROPRODUCTS—A6441-FN-606 PROPELLERS.

During a three-engine ferry flight the feathered propeller suddenly started to rotate as the blades traveled from the feathered to the low pitch position. Control of the aircraft was extremely difficult during this occurrence.

The propeller was manually feathered for ferry flight preparation because of an inoperative feathering motor. A starter shaft locking adapter, Allison P/N 6797969, was also installed. When the blades are manually feathered, it is probable they will move from that setting when the master gear assembly, P/N 6506434, is reinstalled. Also, the manual feathering operation will probably cavitate one side of each blade torque cylinder and eliminate the snubbing action required for the blade to remain in the feathered position.

During flight the airload increased on one camber of the blades and the starter shaft locking adapter failed permitting propeller rotation.

During three-engine ferry preparation the propeller on the inoperative engine must be feathered by means of the propeller feathering motor.

When feathering pump is inoperative the propeller blades should be replaced with stub blades not susceptible to airloads or the entire propeller should be removed.

In any event, whenever the propeller is feathered, propeller blades are replaced with stub blades or the entire propeller is removed, a starter shaft locking adapter and an appropriate engine inlet plug should be installed for the inoperative engine.

This information should be brought to the attention of all operators using Lockheed Model L-188 aircraft equipped with Aeroproducts Model A6441-FN-606 propellers. *

* 61-8. BRITTAN NORMAN BN-2A ISLANDER AND BN-2A MK 111 TRILANDER - HARTZELL HC-C2TK-2B PROPELLERS.

a. Recently a Brittan Norman BN-2A experienced a separation of the inboard end of the deicer boot and the associated deicer lead strap assembly from a blade on the right propeller. The separated end of the boot and lead strap penetrated a cabin window in the propeller's plane of rotation.

b. Postaccident examination of the other propeller assemblies revealed the clamp and tie restrainer were missing from one blade. Various types of restrainers are used to hold deicer straps securely against the hub to prevent loosening of the propeller deicer boot bond when centrifugal forces act on the deicer lead straps.

c. Principal maintenance inspectors assigned to operators of the above type aircraft are requested to:

(1) Emphasize to their assigned operators the importance of establishing appropriate inspection periods for propeller blade deicer boot lead strap restrainers.

(2) Bring to the attention of their assigned operators the fact that flightcrews should pay more attention during their preflight checks; in particular, the deicer boot lead strap restrainers. *

APPENDIX 28. ROTORS (ATA CODE 6500)

*65-1. BELL MODEL 47 HELICOPTER - PILLOW BLOCK TO ROTOR HUB BOLTS. Bogus pillow block to rotor hub bolts have been installed on some Bell Model 47 helicopters in lieu of the correct bolt, Bell P/N 47-120-155-1.

a. Some bolts have been found that do not conform to the radii, hardness, and finish specifications; also, the requirements for magnetic particle inspections may not have been satisfied.

b. A note in the Bell Parts Catalog which stated, "Make from AN177-46A Bolt," may have encouraged local production of this critical bolt without adequate controls. These findings were brought to the attention of Bell, and they have removed the above note from their parts catalog.

c. The correct bolts are identified with an X, within a triangle, within a circle, marking on the bolt head. The bogus bolts are either not identified, or the circle and/or the triangle have been omitted. (See Figure 1.)

d. In view of the critical application of this bolt, it is recommended that during inspection of Bell helicopters for airworthiness certification, these bolts be inspected closely and replaced if they are not the Bell-approved part.

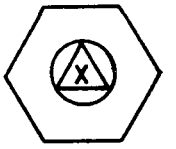

FIGURE 1.

*

* 65-2. BOLKOW MODEL BO-105C HELICOPTER - TAIL ROTOR FORK SPHERICAL BEARING FAILURE. Excessive vibration was noted during flight of a Bolkow model BO-105C helicopter. After landing, it was found that the tail rotor fork spherical bearings, P/N MS 2231-8, had failed. Total time since last bearing replacement was 288 hours.

Further investigation disclosed that of the four spherical bearings installed, two were type ATW 8-10 and two were type NHW8, both types of bearings are manufactured by ASTRO. The BO-105 type design only specifies the ATW 8-10 bearings as approved in this installation. The two spherical bearings that failed were type NHW8. It is assumed that these bearings were either installed by the operator or a repair station facility.

It is suggested that all owners, operators, and maintenance personnel associated with the Bolkow model BO-105 helicopter be alerted of this incident and take appropriate action.

*

APPENDIX 29. POWER PACKAGE (ATA CODE 7100)

*71-1. CONVAIR MODEL 600 SERIES AIRCRAFT - ENGINE MOUNT SUPPORT BOLT. An operator reported that while accomplishing Service Bulletin 71-6 on a CV-600 airplane, they discovered that a newly installed engine mount support bolt had broken. The new bolt, P/N LWB-22-10, apparently broke with only the weight of the engine being supported by the bolts.

a. Inspection of the broken bolt which should have been P/N LWB-22-10 revealed that it was actually NAS 630 bolt. The NAS 630 marking had been stamped over with the LWB-22-10 marking.

b. The operator inspected all LWB-22-10 bolts in stock and found four additional NAS 630 bolts that were identified as LWB-22-10. They also inspected all aircraft that had Service Bulletin 71-6 completed on them and assured that only proper type bolts were installed.

c. An inspection of two aircraft hardware suppliers by FAA revealed only proper type bolts in stock and necessary paperwork was in order. FAA inspectors were unable to determine source of bogus bolts.

d. In view of the seriousness of this incident, the contents of this bulletin should be brought to the attention of maintenance facilities that may accomplish Service Bulletin 71-6. This may also be discussed with aircraft operators and owners as the opportunity arises. *

APPENDIX 30. ENGINES (ATA CODE 7200)
(T = Turbine/Turboprop, R = Reciprocating)

72-1. (T) JET ENGINE INLET BLOCKAGE AND FOREIGN OBJECT INGESTION. A jet aircraft climbing to cruising altitude experienced a compressor stall on one of its engines at 23,000 feet. Examination on the ground revealed an engine cover jammed into the air intake at the compressor guide vanes.

Investigation revealed that the cover had been fabricated by the operator, apparently from a soft material. As a result of this incident, the operator prohibited further use of fabricated engine inlet covers and adopted the conspicuous molded plastic-type covers which are not susceptible to ingestion.

This incident evidently was caused by the lack of adequate maintenance preflight and/or flightcrew walk-around inspection prior to starting engines.

It is suggested that inspectors assigned to operatorsutilizing turbine-powered aircraft review the operators' manuals to assure adequate inspections are performed to preclude the possibility of foreign objects in the engine inlets prior to starting engines. If deficiencies are noted, the operator should be notified. Also, if engine inlet covers of soft, ingestible material are being used on operating engines, their use should be discouraged.

72-2. (T) ALLISON 501D13 TURBOPROP CV-340/440 (CV-580) CONVERSION SERIES. Aircraft Zone #1 and Zone #2 fire warning system sensing elements have been found cross-wired.

a. One operator investigating a reported Zone #2 fire warning found the wiring for the Zone #2 sensing elements routed to the Zone #1 fire warning system, and the Zone #1 sensing elements routed to the Zone #2 fire warning system. The opposite powerplant was also found cross-wired.

b. A fleet campaign of eleven aircraft resulted in finding one additional aircraft where both nacelles were cross-wired and two additional aircraft where one nacelle each was found cross-wired.

c. Records indicate that this condition probably originated as a production error during the Allison engine conversion.

d. It is strongly recommended that all Allison 501D13 powerplant conversion aircraft operators of Convair 580 series aircraft perform the following test:

(1) Disconnect the Fenwal plugs at the bulkhead fittings and by shorting across the pins ascertain that they are in fact connected to their appropriate fire warning circuits.

(2) By use of nylon marker ties, identify Zone #1 and Zone #2 wiring to preclude any future possibility of crossed connections.

e. The wiring from the nacelle junction box for both Zone #1 and Zone #2 sensing elements is long enough to be connected to either the Zone #1 quick-engine-change (Q.E.C.) bulkhead or the Zone #2 tailpipe bulkhead fitting. All connectors are the same type.

f. Since the number of aircraft affected in this case was approximately 40%, it is recommended that a similar fleet campaign be initiated by all operators of like equipment.

72-3. (T) CORROSION OF STAINLESS STEEL WIRE BRAID UNDER FIRE SLEEVES ON FIRE RESISTANT HOSE ASSEMBLIES. A incident was reported in which the stainless steel reinforcing wire braid on a Teflon hose corroded under the asbestos fire sleeve to the extent that failure of the hose occurred. The assembly was a part of a high-pressure fuel manifold assembly on a military turboprop engine. The hose assembly was relatively close to the engine diffuser case and a bleed air manifold. The manufacturer of the hose assembly is of the opinion that the corrosion may have been caused by an acid condition resulting from the combination of the neoprene in the fire sleeve with the heat and moisture encountered during several hundred hours of engine operation.

It is recommended that this condition be brought to the attention of operators utilizing equipment on which fire sleeved hose assemblies are installed in areas subjected to high environmental temperatures.

72-4. (R) CRANKSHAFT FAILURE IN A CONTINENTAL W-670 ENGINE. The crankshaft of a Continental W-670 engine installed in a restricted category aircraft failed. The failure was attributed to the use of a combination of internal parts that were incompatible. Information indicates Continental W-670-9A tank engine pistons, P/N 4925, were used in conjunction with a W-670-6A crankshaft P/N 5891.

The tank engine pistons are designed to provide a compression ratio of 6.1:1; whereas, the crankshaft was designed to absorb a 5.4:1 compression ratio. Thus, under operating conditions, the crankshaft had loads and stresses imposed on it that exceeded its designed limitation for satisfactory and safe operation.

Appropriate operators, owners, and maintenance facilities in your area should be alerted to the hazards that exist when unauthorized parts substitutions are made.

72-5. POWERPLANTS - IMPROPER GRINDING OF OPPOSED ENGINE CRANKSHAFTS.
(R) A number of small opposed aircraft engine failures have occurred as a result of improper crankshaft grinding techniques and practices.

Present information indicates maintenance facilities may be having aircraft engine crankshafts ground at automotive or industrial grinding facilities. Usually such facilities are not approved by the FAA or the engine manufacturer to perform this type work. Therefore, there is no assurance aeronautical standards will be followed in lieu of automotive standards.

Common results of such grinding practices are removal of nitrided journal surfaces, improper journal radii, unsatisfactory finish, and chatter or grinding marks on the journals. Improper removal of material may also induce grinding cracks in the journal surfaces.

Most opposed engine crankshaft journals currently being produced are nitrided during manufacture. The manufacturers specify these crankshafts must be renitrided after grinding. Therefore, it is recommended rework of this type be done at facilities that are approved and cognizant of aeronautical standards, if satisfactory results are to be obtained.

The contents of this bulletin should be brought to the attention of maintenance facilities performing engine overhaul. This may also be discussed with aircraft operator and owners as the opportunity arises.

72-6. CRANKSHAFT FAILURE, TELEDYNE CONTINENTAL ENGINE. The crankshaft of a
(R) Teledyne Continental Engine, Model IO-520-A, failed with only eleven hours of operation since overhaul. This failure was attributed to a misaligned propeller governor oil transfer collar.

a. Engine Models IO-470, TSIO-470, IO-520, and TSIO-520 are equipped with a spring clip, P/N 626990, to ensure proper alignment of the governor oil transfer collar to the oil ports in the crankcase.

b. Improper installation of the spring clip in an excessively raised position can cause loading of the transfer collar into the crankshaft. Installation procedure is contained in Teledyne Continental Service Bulletin M70-18, Revision No. 1.

c. This information should be brought to the attention of all appropriately rated overhaul and maintenance facilities.

72-7. CONVAIR CV-600 AND CV-640 SERIES AIRCRAFT--ENGINE BREATHER LINE SEAL.
(T) A CV-600 aircraft operator reported a flash fire occurred in the engine nacelle aft section (beaver tail). The fire was caused by the ignition of oil vapor (from the engine breather line) which had re-entered the nacelle. A precise ignition source could not be determined.

a. It was established that the lack of a seal in the annular opening between the breather line and the fairing allowed oil vapors to re-enter the nacelle. Dependent on the fairing design, this opening is normally sealed with either an asbestos sleeve or "Staybond HT 1" type sealant.

b. General Dynamics/Convair has issued Alert Service Bulletins Nos.600 (240D) A71-2 and 640 (340D) A71-2, which refer to this incident and outline recommended corrective actions. Suggested procedures include a one-time inspection of the breather line installation and the beaver tail internal compartment for missing seals and evidence of flammable fluid re-entry. If the breather line seal or sealant is missing, it is recommended the welded exhaust gas trough be removed within the next 25 hours flight time to allow for a thorough examination and cleaning of the beaver tail compartment. In addition, Convair suggests that the trough be removed for examination and the beaver tail compartment be cleaned at the next regularly scheduled maintenance inspection, regardless of the condition of the breather line sealing provisions.

72-8. PRATT AND WHITNEY JT3D SERIES ENGINES - FIRST AND SECOND STAGE FAN
(T) BLADES FLAME PLATE OVERSPRAY. Pratt and Whitney Aircraft notified all operators through their field service representatives of a flame plate overspray condition which had been found on some JT3D engine first and second stage fan blades. The overspray was found on the mid-span shroud in the radius beyond the wear surface. At that time, operators were instructed to send all new fan blades showing this condition back to Pratt and Whitney Aircraft for corrective action. Used blades with flame plate reapplication were to be returned to Union Carbide Corporation for corrective action.

a. It was subsequently noted that a limited number of fan blades were found with flame plate overspray on the airfoil surface as well as adjacent to the shroud contact surface. This area of the blade is highly stressed, and there is concern that the loss in material fatigue strength, which can result from the overspray, cannot be regained by simply stripping the flame plate. A laboratory analysis has shown that a glass bead peening of the affected surfaces is required to regain the desired fatigue strength level.

b. Pratt and Whitney Aircraft has recommended that all fan blades now in the shop be inspected for this overspray condition. Blades in operation should be inspected at the next convenient fan section teardown. Also, it is recommended that any blades exhibiting flame plate overspray, whether on the airfoil surface or limited to the mid-span shroud area, be glass bead peened prior to flame plate reapplication to an intensity of 15 N per Figure 1, of Alert S/B 3060 (page 3).

c. A tape masking of the area around the mid-span shroud has been introduced in the blade processing by Union Carbide Corporation. This procedure, while successful in eliminating the above overspray condition, results in a relatively sharp transition between the sprayed and non-sprayed surfaces.

d. In the past, flame plate surfaces were not permitted to end in sharp corners due to possible stress risers associated with sharp radii. However, in this particular application where the shroud contact surface is under a compressive load, it is considered that any stress rise resulting from the relative sharp transition will not be detrimental to blade integrity. Relaxation of the smooth transition requirement of the flame plate at the inside corner of the mid-span shroud as well as new flame plate coating limits were released in a revision to the JT3D Overhaul Manual.

e. Overspray limits for blades coated prior to the use of full tape masking are shown on Figure 2 of Alert S/B No. 3063. For blades that exhibit the flame plate ending in sharp corner (done by tape masking) the new limits are shown in Figure 3.

f. Flame plate overspray in excess of the attached limits can be easily detected by visual examination using a ten power magnifying glass. Suspected "frosting" that is not easily removed by rubbing with a pencil eraser should be considered as flame plate overspray. As in the past, new blades exhibiting this condition should be returned to Pratt and Whitney Aircraft for corective action.

g. Flame plate reapplication for all JT3D fan blades should be accomplished to the new limits established for the tape masking method.

h. Pratt and Whitney Aircraft message, reference PSE:DPF:0-12-17-1 and Alert S/B 3063, Revision 1, should be consulted for instructions. For the various model engines, the issue sequence for the instructions contained in Alert S/B 3063 may be found as follows:

Subject: Turbojet Engine ALERT Service Bulletin No. 3063, Revision No. 1, dated March 12/71

Reason For Revision:

To change the time of inspection for fan blades in operational engines from "the next scheduled shop visit" to "the next convenient fan section teardown."

Model	Issue Sequence
JT3D-1	A 72-566
JT3D-3, -3B, -7	A 72-574
JT3D-1-MC6	A 72-477
JT3D-1-MC7	A 72-498

i. There has been only one instance in which a shroud failed involving the overspray condition. This particular case was found on the ground and did not create any operational problem.

j. The purpose of this Bulletin is to provide FAA personnel with information concerning the subject and to advise of Pratt and Whitney's revised recommendations for compliance.

72-9. (T) CONVAIR MODEL CV-580 AIRCRAFT - POTENTIAL FIRE HAZARD - PROPELLER AND ENGINE INLET ANTI-ICING POWER DISTRIBUTION SYSTEM. An operator reported that a phase-to-phase electrical short circuit had occurred through the current limiter mounting bracket.

a. The propeller and engine inlet anti-ice three phase electrical systems are so designed that each phase is protected with a 40 ampere current limiter. Three current limiters are mounted on an aluminum bracket located in the aircraft's AC electrical circuit breaker panel box assembly. The power wires connecting the AC electrical bus to the anti-icing systems are attached to the current limiters with a 90 degree terminal lug.

b. A fleet inspection revealed that marginal clearances existed between the 90 degree wire termination lugs and the mounting brackets. The operator has issued an Engineering Order to install micarta insulating strips between the terminal lugs and the mounting bracket.

c. This information should be brought to the attention of all operators using Convair Model CV-580 Aircraft.

72-10. (T) WELD REPAIRS ON ASSEMBLED JET ENGINES. An operator of P&W JT4A engines has experienced in-flight shutdowns due to No. 4 bearing race failures. In both instances, the pieces of the bearing races were found to be highly magnetized. Both engines had recently been repaired by welding accomplished on the diffuser case while the engines were assembled.

Spot checks revealed that some operators attach the ground lug to the outer case while weld repairs are being accomplished on inner parts of the engine.

High amperage electrical current passing through an engine or subassembly can cause damage to bearings, seals and other critical components.

The ground lead from the welding rig should be securely attached to the item which is to be welded in such a manner as to prevent high current flow through the engine.

Operators and agencies should be cautioned regarding this matter. Assigned inspectors should assure that maintenance procedures and instructions are adequate to preclude induced part failures.

72-11. BOEING 727 - INFLIGHT DISC FAILURE. A Boeing 727 aircraft experienced an inflight failure of the No. 1 engine due to a breakup of the seventh stage compressor disc. Metal fragments separated the engine circumferentially. In this instance, the metal fragments traveled in a path that was directed away from the fuselage and thereby reduced the possibility of a more critical incident.

a. Investigation disclosed the cause for the seventh stage disc failure was attributed to a manufacturing problem. Review of the aircraft records during the investigation revealed a procedural deficiency also existed. An obvious trend and rise of the inlet and turbine vibration indication from a stabilized .5 and .6 to .1 and 1.2 indication in a period of two days had not been questioned or investigated prior to the experienced failure.

b. Inflight engine failures have been prevented through proper and timely utilization of AVM information and action. Therefore, the value of responsive and timely action related to AVM indication should be considered essential even though it is recognized that certain potential failures cannot be readily identified by the AVM method of indications and trends.

c. In view of the foregoing, it is recommended that assigned inspectors review the AVM programs of their operators. Emphasis should be placed on assuring that maximum safety benefits are being realized by proper application and timely analysis of AVM trends.

72-12. FALSE FIRE INDICATIONS FROM PREVIOUS FLUID LEAKAGE. During an investigation of an in-flight firewarning on a large jet aircraft, the side and bottom of the engine being examined had a scorched appearance forward of the hot section fire seal including the accessory gearbox. The diffuser section was stained and coked, which indicated that a leak may have caused the fire.

After considerable troubleshooting, ground running, and flight testing, it was determined that the charred appearance was the result of an old Skydrol leak.

Prior to the incident, there had been a Skydrol leak at the quick engine change disconnect fitting. The burnt appearance was the remains of baked Skydrol which had not been removed from the engine. Cause of the firewarning was finally determined to be an intermittently shorted firewarning loop.

Failure to clean up fluid leak stains can result in a repeat of this type of erroneous fire indication. Even more seriously, it can result in an actual fire being thought to be just another case of scorched fluid from an old leak.

72-13. BOEING MODEL 747 AIRCRAFT - WING TIP FLUTTER EFFECTS. During winter operations, two incidents of wing tip flutter caused by engine fan blade tip rub were encountered by an operator of a Boeing Model 747 aircraft.

a. Following an aircraft vibration incident it was observed that excessive honeycomb rub and smearing had occurred in the engine fan case. Pratt and Whitney issued Aircraft Alert Bulletin No. 3108 which defines honeycomb smear and establishes the acceptable limits for smear.

b. Engine vibration resulting from badly smeared honeycomb has aggravated the natural wing tip oscillations to such a magnitude that H. F. communication system components located in the wing tip area were damaged.

c. The operator issued a maintenance advisory requiring investigation of engine fan case when entries or comments such as the following are found in the aircraft records.

> "During climb felt flutter (buffet) (vibration) in aircraft. Low frequency approximately three cycles per second. Reduced power on number _____ engine eliminated flutter. Reapplied power and operation normal."

Comments may include that excessive movement or arc-like motion of the H.F. communication system's antenna was observed. The maintenance advisory also stressed that there are other causes for aircraft buffet which should not be overlooked.

d. The operator implemented an H.F. communication system antenna probe security check at 75-hour intervals, also a wing tip component condition and security inspection at 2000-hour intervals. In addition, this inspection is accomplished each time wing tip flutter or buffet is reported.

(T) 72-14. ALLISON MODEL 501-D13 TURBOPROP ENGINE LIFE LIMITED PARTS. SWAP inspections have revealed that certificate holders operating aircraft which utilize Allison Model 501-D13 engines had not maintained records or kept an account of engine time in service and/or cycles of the life limited parts. Several engines were found that had exceeded the life limits of some parts, and others had to be removed from service because the facts relating to the life limited parts were either unknown or questionable.

a. Allison Commercial Service Letter CSL-120 lists the life limited parts for their Model 501-D13 engines. This service letter is FAA approved and is referenced in Note 17 of the Allison Model 501-D13 Engine Type Certificate Data Sheet No. E282-23. Compliance with CSL-120 is also indicated in Airworthiness Directive 69-21-3, pertaining to the life limited cycle requirements of the First Stage Compressor Wheel.

b. Due to the serious problems that can result from operating engines that have exceeded the life limited part requirements, it is recommended that this information be brought to the attention of all operators and agencies that operate, repair, or overhaul Allison Model 501-D13 engines. In addition, determine that all operators have established an effective system to accurately monitor, record, and control the time in service and/or cycle requirements of life limited parts and these parts are either listed or referred to in the Operations Specifications.

* 72-15. ARC BURN OF TITANIUM ALLOY FAN BLADES.

a. A recent examination of a failed Pratt and Whitney JT9D engine fan blade revealed the failure occurred because of a fatigue crack that propagated from a burned area on the leading edge of the blade.

b. The burned area appeared to have been caused by a high-energy electrical arc contacting the leading edge of the blade and producing localized melting of material. Subsequent rapid cooling to ambient temperatures caused local degradation of material properties and probable cracking of the forged titanium alloy.

c. Further examination revealed the burned area had been shotpeened and then mechanically blended. The appearance of the microstructure at the fatigue crack origin indicated that portions of the heat-affected area associated with the arc burn had been partially removed by the blending operation. *

d. Arc burn is evidenced by a small circular or semicircular heat-affected area on the blade surface that may contain shallow pitting, remelting, or cracking. Usually, a dark-blue oxide discoloration is associated with the heat-affected area.

e. We have been made aware that there have been two other occurrences of this type since 1969.

f. Principal airworthiness inspectors are requested to bring this to the attention of their assigned operators and to emphasize that extreme caution should be used with any electrical equipment in the vicinity of titanium alloy fan blades to minimize the possibility of arc burn.

g. Bulletin No. 153 of this order can be referred to for other affects of arc burn.

* 72-16. HOT DAY EXHAUST GAS TEMPERATURE (EGT) LIMITED ENGINES.

a. The problem of hot day limited engines increased following a transition from a complete engine overhaul concept to an on-condition type engine repair. This transition carries with it the implication that engines processed through the shops have a lower EGT than completely overhauled engines. Two operators noted that when hot day limited engines were reported, a greater depth of repair was required during shop visits, although no EGT instrumentation problems were reported. If engines barely meet the required thrust engine pressure ratio (EPR) in the test cell, then there is no EGT margin (cushion) available for hot day operation nor is there any allowance for normal degradation of the engine.

b. The problems concerning the engine and aircraft maintenance programs basically fall into two categories: (1) Engines and (2) Instrumentation.

c. Many instrumentation problems reported were attributed to improperly calibrated EGT systems. Investigation into the instrumentation system revealed that with a properly calibrated system and serviceable gauges, the system is not a factor in EGT hot day limited engines.

d. Principal maintenance inspectors should review their operators' engine maintenance programs to ensure that they meet the airworthiness standards required by Federal Aviation Regulations Section 43.13 in that the engine provides the required thrust within the approved limits prescribed by the manufacturer and that the aircraft instrumentation maintenance program is such that it will provide an accurate indicating system. *

APPENDIX 31. ENGINE FUEL AND CONTROL (ATA CODE 7300)

73-1. FAILURE OF THE CARBURETOR AIR BOX CROSS VANE CONTROL - MOONEY M20 AIRCRAFT. The brazed attachment of the cross vane shaft and its control arm may, in some instances, be very thin and susceptible to failure. To preclude operation of the aircraft with an inoperative carburetor heat system, it is recommended that the attachment of the control arm to the cross vane be examined immediately. Failure of the brazed area should be readily apparent if actuation of the cockpit control does not result in a corresponding movement of the cross valve. An examination of this part of the carburetor hot air system requires the removal of a section of cowling and cannot be accomplished during routine preflight inspection.

This condition should be brought to the attention of owners and operators in your area.

*73-2. PRATT & WHITNEY MODEL JT9D ENGINE - FUEL FLOWMETER LEAK. Six incidents of fires have occurred that resulted from a fuel leak due to a damaged "O" ring at the interface of the fuel flowmeter connection to the fuel oil cooler inlet.

a. Investigations have failed to identify a design deficiency that would damage the "O" ring during engine operation.

b. Correct procedures for replacement of the flowmeter require removal of the support bracket from the fuel oil cooler and the fuel inlet connector before the flowmeter may be removed. It is possible to remove or install flowmeters without disturbing the support bracket or loosening the fuel inlet connector by twisting and cocking the flowmeter at an angle to the engine center line in order to engage or disengage the "O" ring connector. This incorrect procedure for removal or installation may damage the "O" ring, creating a potential fire hazard.

c. To eliminate this hazard, Pratt & Whitney has issued Service Bulletin No. 4221 providing instructions for modifying the flowmeter support bracket. This modified bracket eliminates the necessity of twisting and cocking the flowmeter during removal or installation.

d. This information should be brought to the attention of all operators using Pratt & Whitney Model JT9D engines. *

73-3. FUEL LEAKS AT THE FUEL QUANTITY INDICATOR AND RELATED FUEL LEAKING DIFFICULTIES EXPERIENCED IN GENERAL AVIATION AIRCRAFT. A review was conducted of reported fuel leaks at the fuel quantity indicators as well as related fuel leaking difficulties using the information obtained from the FAA Maintenance Analysis Center Data Bank at Oklahoma City.

Between July 1969 and January 1974, there were 607 service difficulty reports concerning problems with aircraft fuel systems. These reports included 178 instances where fuel was leaking from the fuel system and 104 reports involved fuel leaking into the cockpit area. These leaks were caused for a variety of reasons; i.e., leaking from seals around a sight gauge; instruments filling with fuel and leaking from the instrument cases; damaged or ruptured diaphrams; and deteriorated hoses due to ageing or chafing at clamps.

It should be readily recognized that leaking of aviation fuel into the cockpit is an extreme hazard to the safety of flight. The importance of alerting maintenance facilities cannot be overemphasized. Close inspections of gauges, instruments, fittings, lines, hoses, and clamps should reveal such discrepancies. It is imperative that proper repairs and replacement of indicators be performed when such leaks develop to assure the integrity of the fuel system.

The potential dangers associated with fuel leaks in the cockpit should be brought to the attention of your assigned maintenance facilities.

*73-4. PRATT & WHITNEY MODEL JT4 TURBOJET ENGINE FUEL PRESSURIZING AND DUMP VALVE. A JT4 engine was shutdown as a result of an inflight fire. The engine was still on fire upon landing and was extinguished by ground personnel.

a. Investigation revealed that diffuser case burn-through resulted from the fuel pressurizing and dump (P&D) valve overboard drain line being plugged.

b. Pratt & Whitney Service Bulletin 3931 (Section 2, Parts I and II, Item B(1)) requires that the P&D valve overboard drain be plugged and an internal spring and plug be added.

c. The P&D valve internal spring and plug specified by Service Bulletin 3931 had not been incorporated in this engine. During subsequent engine operation, the dump valve failed to close which resulted in a massive fuel leak. The internal drain passage in the valve housing, designed to provide a relief path *

for adaptor seal leakage, acted in reverse. With the P&D valve overboard drain line plugged, pressurized fuel flowed through the open dump valve, back through the relief path into the manifold adaptor flange area and the diffuser case.

d. It is recommended that all operators using Pratt & Whitney Model JT4 turbojet engines be informed of this potential fire hazard which may result from improper or incomplete incorporation of Service Bulletin 3931.

73-5. HAMILTON STANDARD JET FUEL CONTROL USED ON PRATT AND WHITNEY MODEL JT9D-3A ENGINE.

a. A JT9D-3A model engine flamed out during flight and would not relight. The trouble was traced to the jet fuel control unit, P/N 373500-3. Disassembly revealed the anti-rotation link assembly, P/N 565440, was binding against the throttle valve pilot valve thrust bearing tang resulting in extraneous loads on the throttle valve pilot valve. This condition lowered the fuel schedule by approximately 600 PPH fuel flow permitting the engine to decelerate below the required "to run" line.

b. Hamilton Standard Service Bulletin 73-129 recommends the use of an improved link, P/N 740990-1, and bracket, P/N 757606-1, for the throttle valve pilot valve thrust bearing. Pending the accomplishment of this Service Bulletin, maintenance inspectors should caution all operators of aircraft using jet fuel control P/N 373500-3 to check the throttle valve pilot valve anti-rotation link assembly for wear, freedom of movement, and ensure it is properly installed during each unit calibration.

c. It should be noted that, since the anti-rotation link is internal to the fuel control, the inspection cannot be performed in the field but at an overhaul shop.

*73-6. RDa.7 AND RDa.10 DART ENGINE CONTROL BOX MOUNTING BOLT FAILURE.

a. Three recent instances involving detachment of the head of the control box mounting bolts have occurred. In one of the above instances, the bolt shank partially entered the control box and restricted throttle movement.

b. A review of the circumstances of failures indicates that, dependent on the control lever positions within the control box, movement of the high pressure cock operating lever could also be restricted.

c. Examination of the failed bolts indicates that failure was primarily due to hydrogen embrittlement caused by diffusion of the cadmium protective coating into the bolt material. The cadmium coated bolt was introduced by Mod. 1525. *

* d. The manufacturer, Rolls-Royce, has issued an Alert Service Bulletin, Number Da76-A17, dated March 1978, and revision 1, dated April 4, 1978, which contain procedures for removing and replacing bolts.

e. It is recommended that PMI's assure that their operators are aware of the service bulletin and that the maintenance programs include inspections of this particular area. *

APPENDIX 32. IGNITION (ATA CODE 7400)

74-1. IDENTIFICATION OF "S" SERIES MAGNETO CONDENSERS. The Bendix Corporation has advised they are having many approved aircraft condensers returned to them by those who feel they are not approved. Bendix has indicated this problem may stem partially from incorrect information which may have been furnished to maintenance personnel.

This bulletin gives illustrations prepared by Bendix showing the approved condensers for use in "S" series aircraft magnetos, and these should be referred to when any question arises regarding this subject.

IDENTIFICATION OF "S" SERIES

AIRCRAFT MAGNETO CONDENSERS

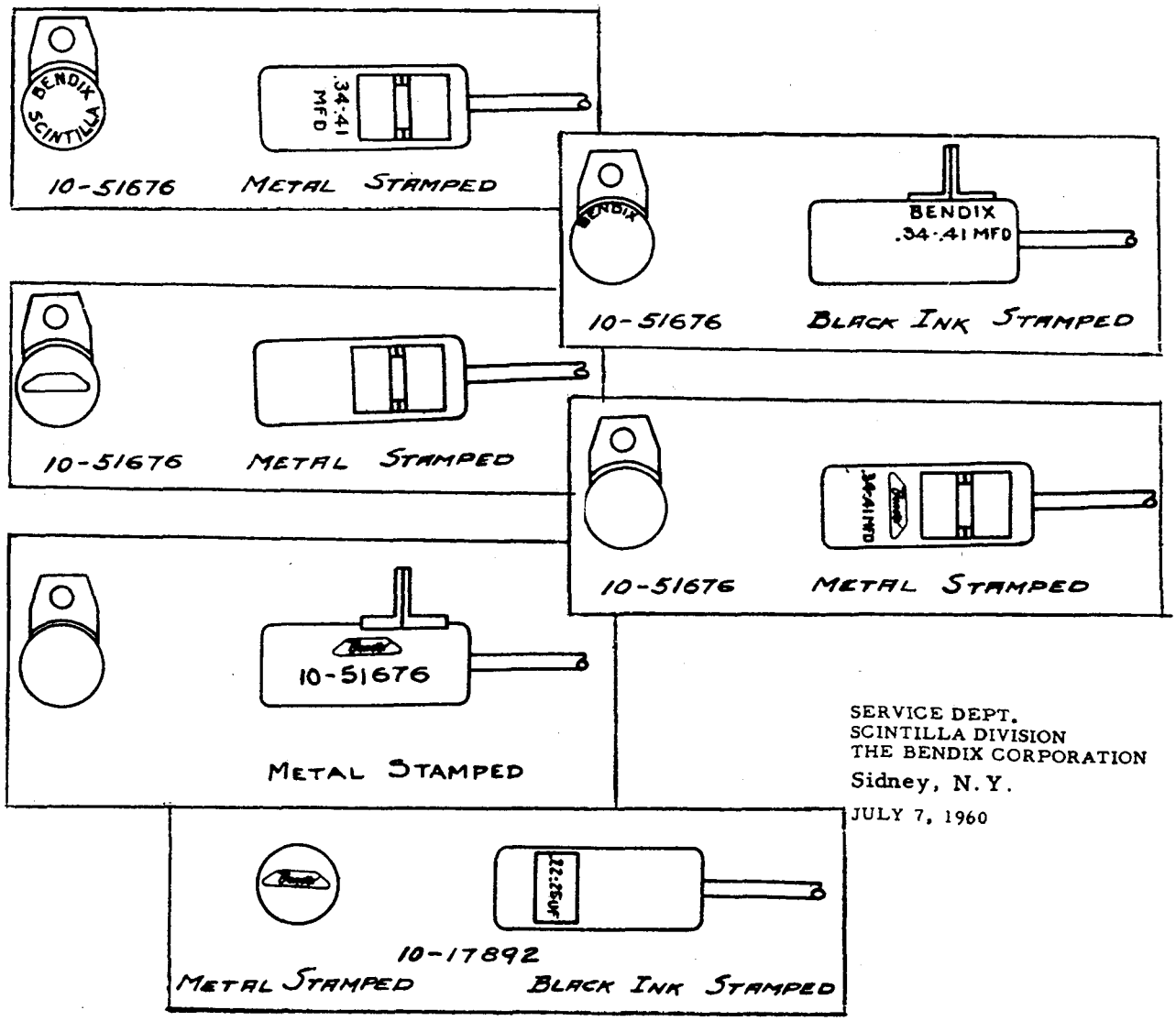

SERVICE DEPT.
SCINTILLA DIVISION
THE BENDIX CORPORATION
Sidney, N.Y.
JULY 7, 1960

74-2. BELL MODEL 206A HELICOPTER - AUTOMATIC RE-IGNITION SYSTEMS. Information indicates that some operators employ or contemplate installing automatic re-ignition systems to provide quick relight if an engine flameout occurs due to snow ingestion.

a. Studies carried out by the helicopter manufacturer disclose that under certain conditions auto-ignition can result in excessive torsional stresses in the helicopter drive system and affect the fatigue life of critical components.

b. Provisions are made for air-starts, and the approved flight manual outlines the procedure whereby they can be made without detrimental effect. Unfortunately, with auto-ignition the ignition takes place irrespective of whether or not the proper air-start parameters exist.

c. Operators considering the use of auto-ignition systems should be advised of the inherent problems and the need for an adequate investigation prior to approval for use.

APPENDIX 36. ENGINE EXHAUST (ATA CODE 7800)

78-1. BOEING 747 - INADVERTENT THRUST REVERSAL. There have been reports of inadvertent thrust reversals on the B-747 aircraft after the thrust reverser system had been rendered inoperative. Two of these reversals occurred in flight and at least one has occurred during a ground run. Investigation revealed the following.

a. The thrust reversers had previously been reported as malfunctioning, and the thrust reversers were rendered inoperative and stowed by the maintenance personnel.

b. In one case involving a turbine reverser, the reverser sleeve was secured in the forward thrust position by the use of safety wire rather than the rigging turnbuckles called for by the maintenance manual. The safety wire failed and allowed the turbine reverser sleeve to move to the reverse position. Further, the indicator system had been deactivated because of other damage and therefore the flight crew had no cockpit indicator light advising of the adverse condition.

c. In another situation involving the fan thrust reversal system, the fan sleeve was stowed in the forward thrust position with lock bolts as specified by the maintenance manual. In addition, a signal line was removed from the directional control valve and capped; however, as a result of the capping procedure, a pressure buildup caused an erroneous reverse signal to be applied to the actuator when power was retarded on the engine. The lock bolts failed in tension and the reverser sleeve translated into the reverse position.

As a result of these incidents, the Boeing Company has reviewed the maintenance manual and has issued supplementary instructions concerning procedures to be taken when stowing fan reversers. These instructions have been forwarded to B-747 operators in the form of a TWX.

Due to the serious operational problems that can be encountered as a result of inadvertent thrust reversals, it is recommended that this information be brought to the immediate attention of B-747 operators and that they be impressed with the necessity of following the maintenance manual procedures when thrust reverse systems are rendered inoperative.

* 78-2. DC-8 OUTBOARD FAN THRUST REVERSER PANEL. Recently, a DC-8-52 operational incident occurred when the outboard fan reverser panel had failed to stow during flight due to a loose sequencing valve line "B" nut.

At lift-off with V2 of 127 knots, the stall warning came on at about 130 knots and stayed on until 145 knots. Vibrations were felt in the control column, but the controls did not feel abnormal. Vibrations also could be felt in the cockpit floor. An in-flight inspection was made, but nothing appeared abnormal, except vibrations were more pronounced through the cabin floor near the leading edge of the wing. The flight continued to its destination and landed without incident.

Inspection revealed that the No. 3 engine primary and secondary reversers were in full reverse with the cockpit thrust reverser lever in the forward stowed position. Further checking of the thrust reverser revealed that the "B" nut on the sequencing valve sense line was backed off. The "B" nut was tightened and the thrust reverser then functioned normally.

Principal maintenance inspectors assigned to DC-8 operators should review their operators' maintenance program to determine that adequate inspection is provided in this area. *

APPENDIX 37. ENGINE OIL (ATA CODE 7900)

79-1. PIPER MODEL PA-28R-200 AIRCRAFT - ENGINE CRANKCASE OIL QUICK-DRAIN VALVE. There have been reports of inadvertent loss of engine oil due to the nose landing gear retracting against the oil quick-drain valve and causing it to open. It is believed that in each case an improper drain valve had been installed.

It is important to determine drain valve applicability by part number for each aircraft model and/or serial number. Piper Service Letter 534A relates to this subject. Also, Piper parts catalogue currently shows three acceptable drain valves for the PA-28R series aircraft. If the proper valve is installed, there is adequate clearance and the valve would not be inadvertently opened.

It is recommended that all inspectors bring this subject to the attention of owners, operators, mechanics, and repair station personnel during safety meetings and other routine surveillance.

☆U.S. GOVERNMENT PRINTING OFFICE: 1991 - 522-344/40124