AC NO: 150/5220-9

DATE: 4/6/70

ADVISORY CIRCULAR

DEPARTMENT OF TRANSPORTATION
FEDERAL AVIATION ADMINISTRATION

SUBJECT: AIRCRAFT ARRESTING SYSTEMS FOR JOINT CIVIL/MILITARY AIRPORTS

1. PURPOSE. This advisory circular updates existing policy and describes and illustrates the various types of military aircraft emergency arresting systems that are now installed at various joint civil/military airports. It also informs users of criteria concerning installations of such systems at joint civil/military airports.

2. CANCELLATIONS. Airport Engineering Data Sheet No. 34, Aircraft Arresting Systems, dated August 1962, is cancelled.

3. REFERENCE. Copies of Federal Aviation Regulations, Part 77, Objects Affecting Navigable Airspace, may be obtained from the Superintendent of Documents, U.S. Government Printing Office, Washington, D.C. 20402, by ordering FAR Volume XI for $2.75. Check or money order should be made payable to the Superintendent of Documents.

Chester G. Bowers
Director, Airports Service

Initiated by: AS-570

1. INTRODUCTION.

a. The military has a requirement for the installation of arresting devices for the safety of operations at civil airports where certain military operations have been authorized. For the past fifteen years, the Federal Aviation Administration (FAA) has advised the military on the installation of arresting devices in the overrun areas and, when necessary and justified, on the runway areas of these airports. During this period, there was a substantial saving of lives and aircraft and there were few incidents where civil aircraft were damaged as a result of landing on or rolling over the raised pendant cables when located on runways or overruns. The primary purpose of the arresting systems is the saving of lives by preventing the aircraft from overrunning runways in cases where the pilot is unable to stop the aircraft during landing or aborted take-off. The secondary purpose is the saving of aircraft and prevention of major damage.

b. The FAA has conferred with the military, arresting device manufacturers, and users in order to formulate a policy which would satisfy the operational requirements of the military while not detracting from the safety of civil aviation. This policy is reflected in the description, referenced illustrations, procedures, and criteria in paragraph 2.

2. DESCRIPTION OF COMPONENT PARTS OF ARRESTING SYSTEMS. Arresting systems can be divided into two major component parts, namely, engaging or catching and energy absorption devices.

a. Engaging or Catching Devices.

(1) "Donut" Supported Pendant Cable. (Appendix 1, Page 1, Figure 1.) This method consists of a pendant cable which is stretched across the runway (normally in the overrun) for the purpose of arresting those aircraft equipped with a tailhook which the pilot activates. The pendant cable is generally supported by rubber "donuts." The "donuts" are normally spaced 6 feet apart when installed on a runway 150 to 200 feet wide, and 8 feet apart when the runway is wider than 200 feet. It is necessary to keep the pendant cable pre-tensioned to keep the bottom of the cable about 2½ inches above the runway. This engaging device can be coupled to various types of energy absorbers. The pendant cable can be readily disconnected from the energy absorbers to facilitate replacement or temporary relocation for snow removal or other types of runway maintenance.

(2) MA-1/MA-1A Type Barrier Net. (Appendix 1, Page 2, Figure 2.) This engaging device consists of a nylon webbing net assembly stretched across the runway (overrun) for the purpose of arresting nontailhook-equipped aircraft with nosewheel tricycle landing gear. This system is normally activated by the control tower. The net is supported by two steel retractable stanchions which maintain the webbing assembly at the proper height across the runway (overrun). This net is about 4 feet high and the vertical nylon straps are attached to a steel cable resting on the runway (overrun). As the aircraft nosewheel strut engages the barrier net, the steel cable is pulled up and over the main wheels where it lodges against the landing gear struts, thereby providing a means for arresting the aircraft.

(3) BAK-11 or "Pop-Up" Cable. (Appendix 1, Page 3, Figure 3.) This method is similar to the MA-1/MA-1A engagement, in that the cable engages the main landing gear struts. As the aircraft approaches this system, it passes over switch plates connected to an electronic timing device. The position and speed of the aircraft are automatically computed. At the correct instant, high-pressure air is used to eject the cable concealed in a trough in the runway, throwing the cable vertically upward and engaging the aircraft's main landing gear struts. Although generally used with nontailhook-equipped aircraft, the timing device can be set to throw the cable up behind the main gear and engage a hook attached to the tail section of the aircraft. However, in most cases, a separate pendant cable is installed for hook-equipped aircraft.

b. Energy Absorption Devices. Any of the following arresting devices can be used with the above-mentioned engaging devices.

(1) Anchor Chain. (Appendix 1, Page 4, Figure 4.) This system uses ship anchor chains which weigh approximately 20 to 120 pounds per foot and vary in length to provide the required braking force. The chain is laid out parallel to the edge of the overrun to insure that it is free to pay out to arrest the aircraft. The chain can be placed in a trench which is covered and compacted with soil.

(2) BAK-9 Rotary Friction Energy Absorber. (Appendix 1, Page 5, Figure 5.)

(a) This arresting absorber is a rotary friction arrester designed for land-based (overrun) protection. This model consists of a pair of tape storage reels mounted on a common shaft with two B-52 type aircraft disc brakes. This

assembly is mounted on a steel-welded frame which also supports the control system on one end and the retraction system on the other. One tape attaches to the near side engaging element and the other tape passes under the runway through a pipe, turns back, and passes around a deck sheave, attaching to the other end of the engaging device. Envelop size of the arresting engine is 103 inches long, 66 inches wide, and 70 inches high; total weight including tapes is 6,800 pounds. Each tape reel holds 1,200 feet of nylon tape 0.2-inch thick and 7 inches wide. These tapes are connected from the tape reels to deck sheaves at the edges of the runway. During an arrestment, the forward motion of the aircraft pulling the tape downfield rotates the storage reel. The reel in turn drives a hydraulic pump which applies pressure to the brakes. Runout distance can be limited by using a control cam to regulate the hydraulic pressure. The system is rewound by a 15 horsepower (HP) 220/440 volt, three-phase electric motor which is clutched to the storage reel shaft.

(b) The BAK-9 can be installed as a single or dual engine arrangement. Runout distances are set by the military to provide a minimum 950-foot runout. The engines are mounted below grade in a reinforced concrete pit. The tape tubes are 8 inches in diameter. A wire rope deck-engaging pendant is attached to a 7-inch nylon tape at the runway edges.

(3) <u>BAK-12 Rotary Friction Energy Absorber</u>. (Appendix 1, Page 6, Figure 6.)

(a) This energy absorber is similar to the BAK-9 in concept and performance, except that it was designed for improved capability and portability. The BAK-12 incorporates two separate and independent energy absorbers (B-52 brakes) deployed one on each side of the runway and interconnected by an engaging device. The fairlead beam assembly (or deck sheave) is separate from the energy absorber section, thereby allowing a favorable degree of flexibility with regard to installation. Each energy absorber section incorporates a reel approximately 60-inches in diameter and stores sufficient tape for a minimum 950-foot runout. The reel and brake assemblies are stanchions mounted on a steel-welded frame which also supports the hydraulic control unit and the rewind system. Each energy absorber unit is 125 inches long, 52 inches wide, 60 inches high, and weighs 5,000 pounds. A 35 HP unit powered by a packet type gasoline engine can be utilized to rewind the tape to battery position.

(b) When an airplane engages the cross-runway cable, the purchase tapes are tensioned and the tape reels rotate and drive the main hydraulic pump. Hydraulic fluid is taken from a reservoir and pumped through an orifice to produce brake pressure as a function of airplane speed. As a purchase tape is payed out and the speed of the airplane is reduced, the effective reel diameter decreases since the tape is wound on the reel. The U.S. Air Force uses a minimum runout of 950 feet and a pendant cable 1 or 1-1/8 inches in diameter.

(4) BAK-6/F27A Water Squeezer. (Appendix 1, Page 7, Figure 7.) This energy absorber works on the "water squeezer" principle in which two loosely fitting pistons connected through a cable are pulled through a tapered (stepped) tube. A portion of the tube is partially filled with a solution of antifreeze and water. As the pistons move toward the smaller end of the fluid-filled section of the tube, the annular orifice between the pistons and the tube diminish, resulting in steadily increasing hydraulic pressure which retards the travel of the pistons which in turn applies retardation load to the aircraft through the cable system, thereby bringing the aircraft to a stop.

(5) BAK-13. (Appendix 1, Page 8, Figure 8.) The BAK-13 is a portable, velocity sensitive, turbine type, rotary hydraulic aircraft arresting system utilizing a split energy absorber engine concept. Two identical energy absorber engines utilizing two runway deck sheaves are installed on opposite sides of the runway and interconnected by nylon purchase tapes and a pendant cable. Arrestment of an overrunning aircraft is accomplished by engagement of the aircraft arresting hook with the pendant cable which is stretched across the runway. The energy of the arrested aircraft is absorbed in the liquid turbine during tape pay out. The turbine consists of a vaned rotor between vaned stators in a housing filled with a water/glycol mixture. The liquid turbulence caused by the stator and rotor interaction converts the landing aircraft's kinetic energy into heat. A cooling system is provided to dissipate this heat during rapid cycle operations. After the aircraft has been safely brought to a stop and the tailhook disengaged, the pendant cable, and nylon tapes are returned to the battery position by a retraction system. The terminal capacity of the BAK-13 will permit approximately 20 arrestments within a one-hour period. Installation criteria have not been coordinated and developed with the military on this specific design. Additional criteria will be developed and coordinated, when requested, by the military.

3. POLICY.

a. General.

(1) Aircraft arresting systems should always be installed in the overrun area whenever this area is of sufficient length to facilitate aircraft arrestment. Install the system at least 25 feet outward from the runway threshold lights and outward from any taxiways located beyond the runway threshold. Where displaced thresholds exist at civil/military airports, do not consider this displaced area as an overrun area if its use is required for any normal landing or takeoff operation. The installation of arresting devices in displaced areas will be governed by the policy applicable to runway areas described in paragraphs 3b and 3c.

(2) Prior to the installation of any aircraft arresting device, determine that the installation will have no adverse effects upon the operation of navigational aids serving the airport.

(3) The barrier net is required to be in the retracted position at all times, except when military aircraft are making landings or takeoffs on the runway and have requested the barrier net to be in the battery position. However, in the event the military user determines that the barrier net must be maintained in a raised position, due to actual or forecasted freezing weather conditions or temporary malfunctioning of the actuating mechanism, the following policy will apply: Civil aircraft may takeoff "over" or land "towards" a raised barrier net providing the barrier net is located as described in paragraph 3a(1). Civil aircraft should not be prohibited from landing over a raised barrier. Pilots will be informed of the raised barrier net and advised that landings or takeoffs will be at their discretion.

(4) Make a joint civil/military inspection to insure compliance with all criteria prior to final approval of the installation. Civil representation should include at least one person from FAA and one from airport management. Permission to install arresting devices should be given in writing by airport management.

b. Installation in the Runway Area. When it is considered essential to install the cross-runway "donut" supported pendant cable in the runway area, install all of the in-place equipment, including fair-lead beam assembly; deck sheaves; and energy absorbing devices, in

such a manner that no equipment is above grade other than the "donut" supported cross-runway pendant, except as noted in specific criteria pertaining to BAK-12 systems. All other equipment should be covered at grade level to facilitate aircraft operating over the area without hazard.

c. Specific Criteria - BAK-12 (In-Place Equipment and Engaging Device). The redesign of the BAK-12 equipment to utilize a deck sheave rather than a fairlead beam assembly is one of several design changes made to arresting devices in recent years. This has made it exceedingly difficult to develop standard installation criteria. As changes are made in arresting systems, it is necessary for the FAA to offer to evaluate them to determine whether installation guidelines need corresponding revisions. This is required to achieve an installation meeting the requirements of the military at joint civil/military airports and at the same time assure the least possible hazard to civil aviation. We continually stress to the military the need for development work in arresting systems so that such systems, when installed at joint-use airports, will present no problems for civil aviation. The BAK-12 design is such that the nylon tape may travel in a 90-degree arc in both directions from the sheave centerline. Maintain an area of 950 feet, longitudinally, from the sheave so that the tape and pendant cable will not come in contact with obstructions during arrestment or rewind. While this is the capability of the system, most engagements are "on center engagement." Order 5220.1 stated ". . . the area of the grade closest to the runway must be faired toward the runway to the maximum extent possible." Since adequate fairing cannot be achieved when the equipment is installed within the runway area, the sheave has now been moved further from the runway edge. Additionally, with the elimination of the fairlead beam assembly, grading contours have been changed; and the military has advised that all systems to be installed at joint-use airports will, in most cases, have below-ground engine installations.

(1) The "donut" supported cross-runway pendant cable should be of such length that the connection to the tape lies off the runway surface with a minimum of tape (5 feet or less) being exposed outside the deck sheave when the arresting system is ready for operation.

(2) Each of the "donuts" which supports the cross-runway pendant cable should contact the runway surface so that the top edge of the cable is within 3½ inches of the runway surface nearest it. An upward tolerance of one-half inch is permissible in consideration of depressions in runway pavement.

(3) Make every effort to install the arresting system in the overrun areas at least 25 feet from the threshold. When this is accomplished, the deck sheaves shall be installed so that the nearest point is at least 10 feet from the edge of the runway edge extended. When all efforts have been exhausted to install the arresting devices in the overrun area and when military necessity requires, the deck sheave may be installed within the runway areas, provided the deck sheaves are installed at least 25 feet from the edge of the runway (see Figures 2 and 3 of Appendix 2). Where satisfactory operation of the system requires semiflush runway edge lights, no more than two such lights may be utilized to replace the elevated edge lights on each side of the runway (see Figure 4 of Appendix 2 for optimum location showing only one runway light on each edge of the runway requiring replacement).

(4) Normally, the highest surface of the deck sheave should not exceed the elevation of the runway centerline (primary surface) as defined in the Federal Aviation Regulations, Part 77. However, where the grade of the runway shoulders and/or transverse slope precludes such installations, the deck sheave may protrude no more than its design height of 12 inches above the adjacent finished grade or 12 inches above the nearest pavement edge, whichever is lower (see Figure 2 of Appendix 2).

(5) The finished grade of both sides of the tape tube and underground pit (which houses the energy absorber engines) shall be compacted and have at least a 30:1 slope. The finished grade closest and facing the runway should be faired to at least 5.5:1 slope on the opening face side of the deck sheave and a 6:1 slope on the opposite side of the deck sheave. The finished grades shall be of sufficient strength to facilitate an aircraft rolling over the area without hazard (see Figures 1, 2, and 3 of Appendix 2).

(6) Where the energy absorption engines must be above ground, the following additional criteria are applicable:

(a) Compact the finished grade on both sides of the tape tube and have at least a 30:1 slope for a distance of 200 feet from the face of the deck sheave. Thereafter, tape the grade on both sides of the tape tube to the energy absorption engines. The finished grade shall be of sufficient strength to facilitate an aircraft rolling over the area without hazard.

(b) Install the engergy absorption engines above ground if they are located no less than 400 feet from any runway centerline and no less than 200 feet from the edge of any taxiway. In cases where it is not possible to provide a 200-foot distance from the taxiway, locate the energy absorption engines not less than 60 feet from the taxiway edge. At Category II airports, the energy absorption engines shall be installed a minimum of 500 feet from the runway centerline.

(7) Mark all runways in accordance with Appendix 2, Page 5, Figure 5, to indicate the location of the cross-runway pendant cable using only the disc warning markers portion (painted "identification yellow" solid circles on the runway) of the North Atlantic Treaty Organization marking system. Space these markings evenly across the runway under the cable, except when they interfere with touchdown zone and centerline lighting. In this case, consider relocating the "donut" supported cross-runway pendant cable to avoid interference with touchdown zone lighting or marking.

4. OBTAINING PERMISSION TO INSTALL ARRESTING SYSTEMS ON CIVIL/MILITARY AIRPORTS. The military will notify the airport management of its desire to install an arresting system. After airport management's concurrence, the military will submit preliminary plans or sketches to the FAA area office concerned for recommendations. Final plans will be submitted at a later date when all recommended changes have been considered.

5. WAIVERS. The above policy is binding upon FAA personnel in giving advice with respect to proposed installations of aircraft arresting systems at civil/military airports. In the event it becomes necessary to deviate from this policy, the FAA area office should forward each such request, with supporting documentation and recommendations, through channels for consideration to the Federal Aviation Administration, Airports Service, Attention: AS-570, Washington, D.C. 20590. All waivers will be coordinated with Flight Standards Service at the Washington level.

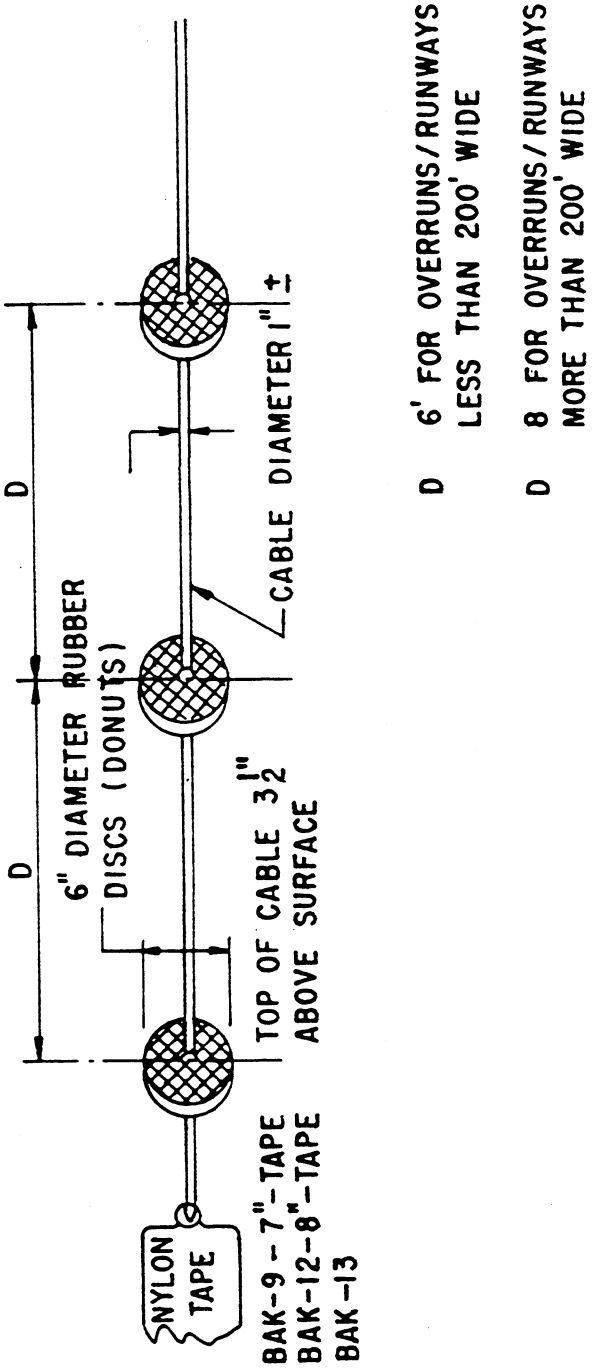

FIGURE 1. RUBBER DISC "DONUT" SUPPORTED PENDANT CABLE

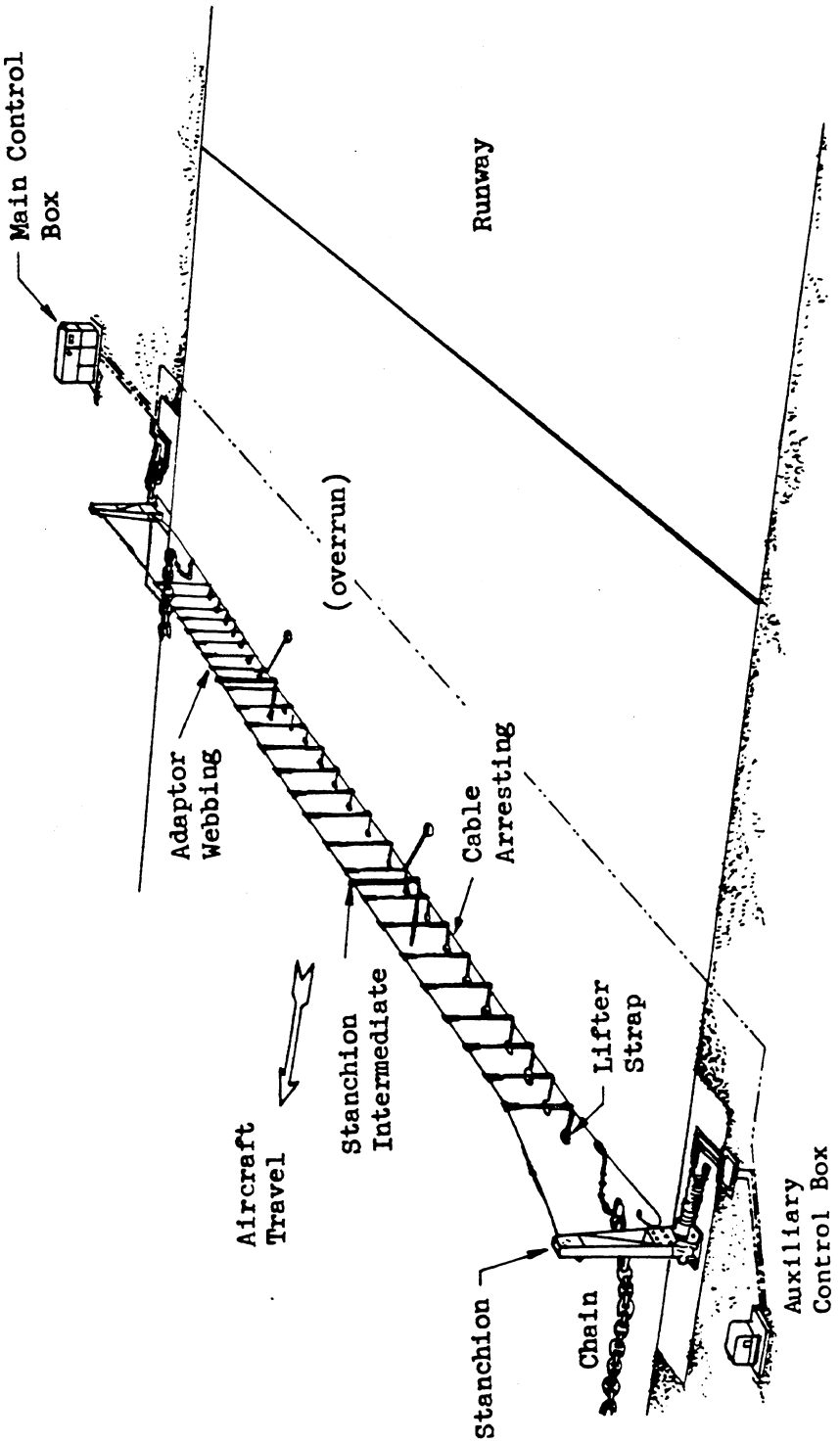

FIGURE 2. MA-1/MA-1A TYPE BARRIER NET

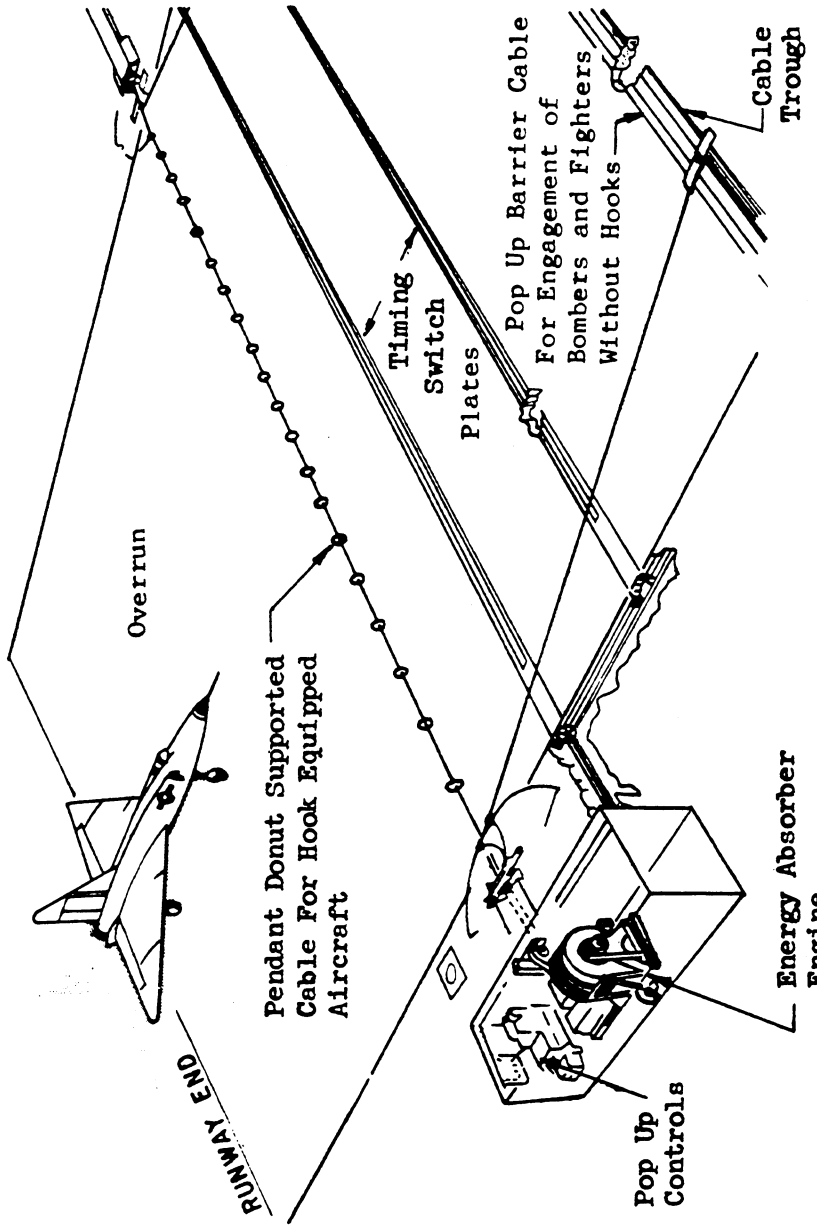

FIGURE 3. BAK-11 OR "POP-UP" CABLE FOR NONHOOK AIRCRAFT AND PENDANT CABLE FOR HOOK EQUIPPED AIRCRAFT

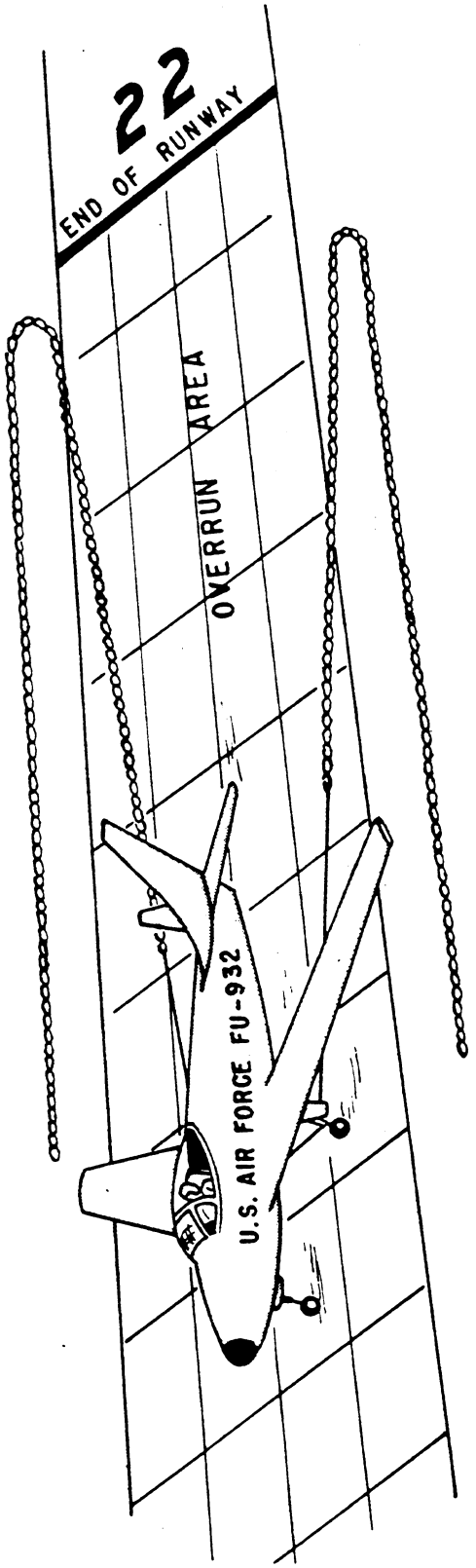

FIGURE 4 ANCHOR CHAIN ENERGY ABSORBER

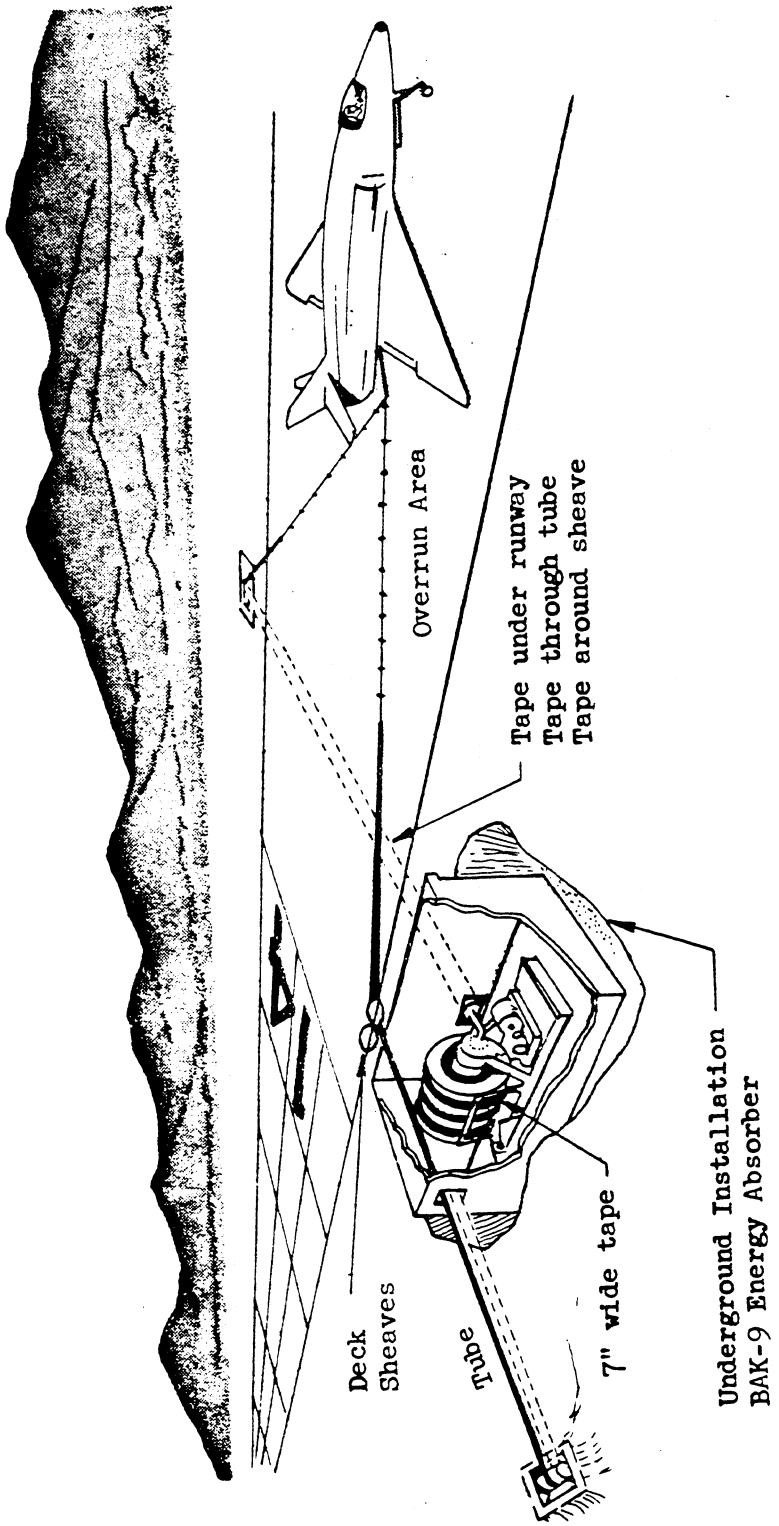

FIGURE 5. BAK-9 ROTARY FRICTION ENERGY ABSORBER AND "DONUT" SUPPORTED PENDANT CABLE CATCHING DEVICE

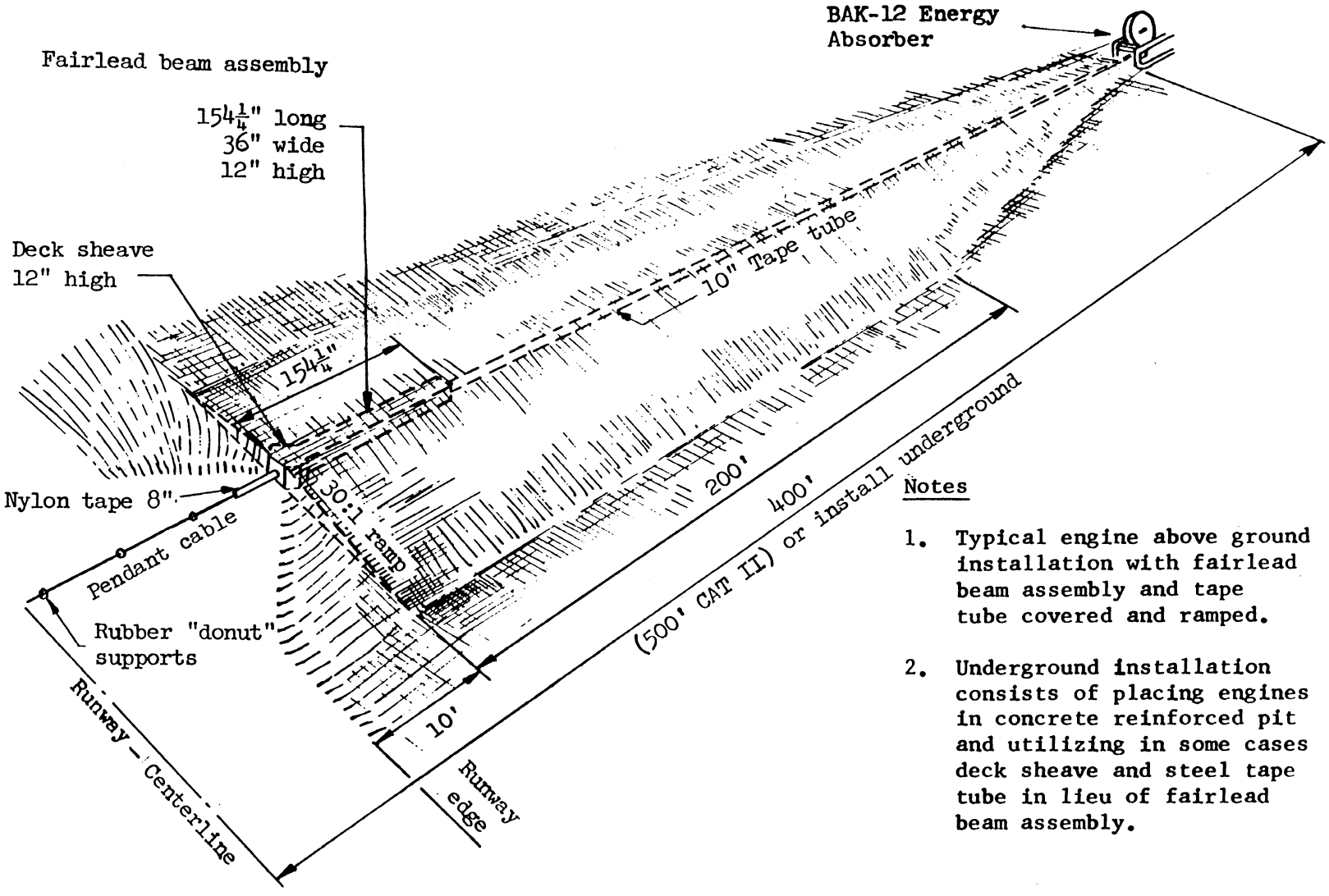

Notes

1. Typical engine above ground installation with fairlead beam assembly and tape tube covered and ramped.

2. Underground installation consists of placing engines in concrete reinforced pit and utilizing in some cases deck sheave and steel tape tube in lieu of fairlead beam assembly.

FIGURE 6. BAK-12 ROTARY FRICTION ENERGY ABSORBER/FAIRLEAD BEAM ASSEMBLY OR DECK SHEAVE/PENDANT SUPPORTED PENDANT CATCHING DEVICE

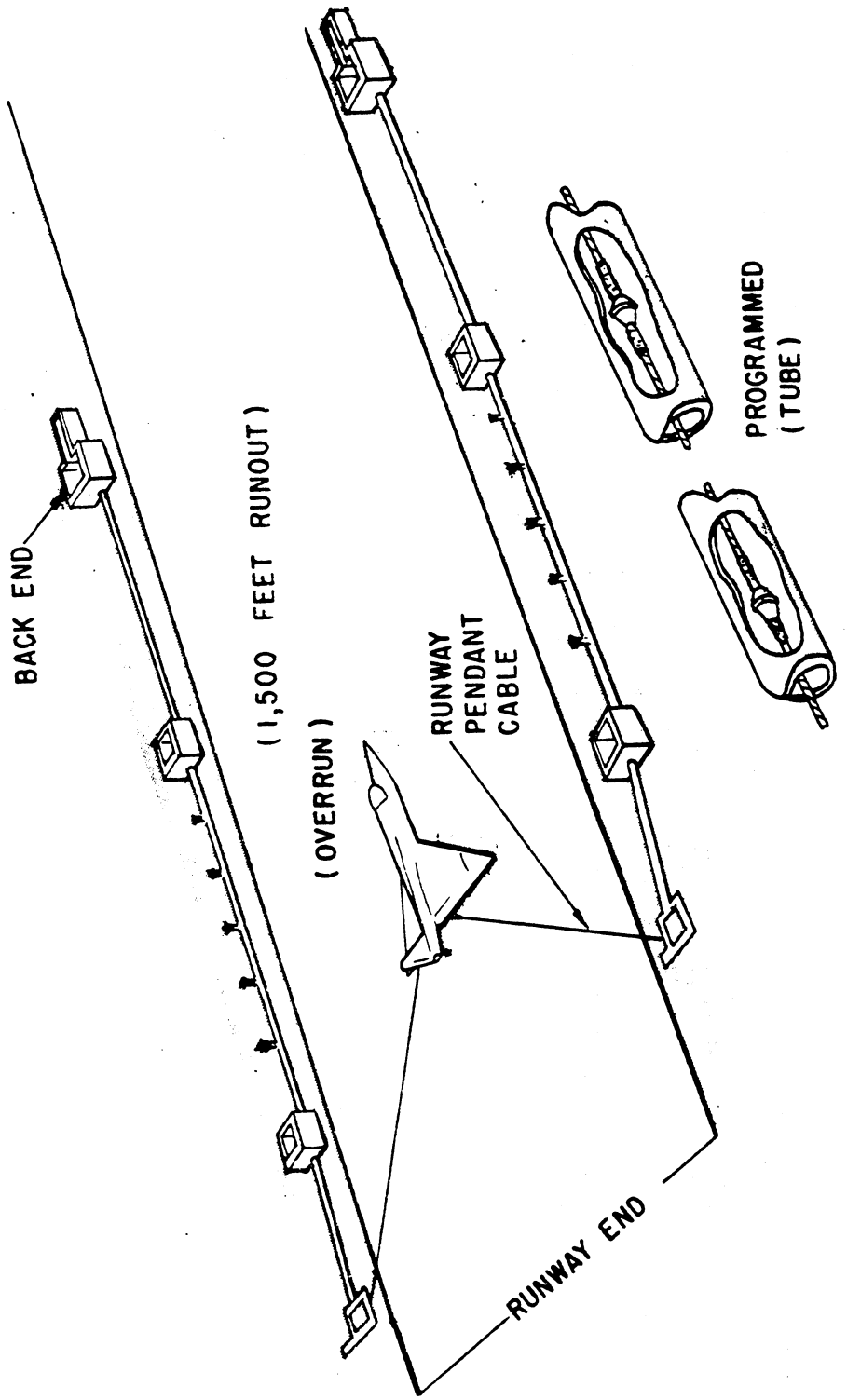

FIGURE 7. BAK-6/F27A WATER SQUEEZER ENERGY ABORBER

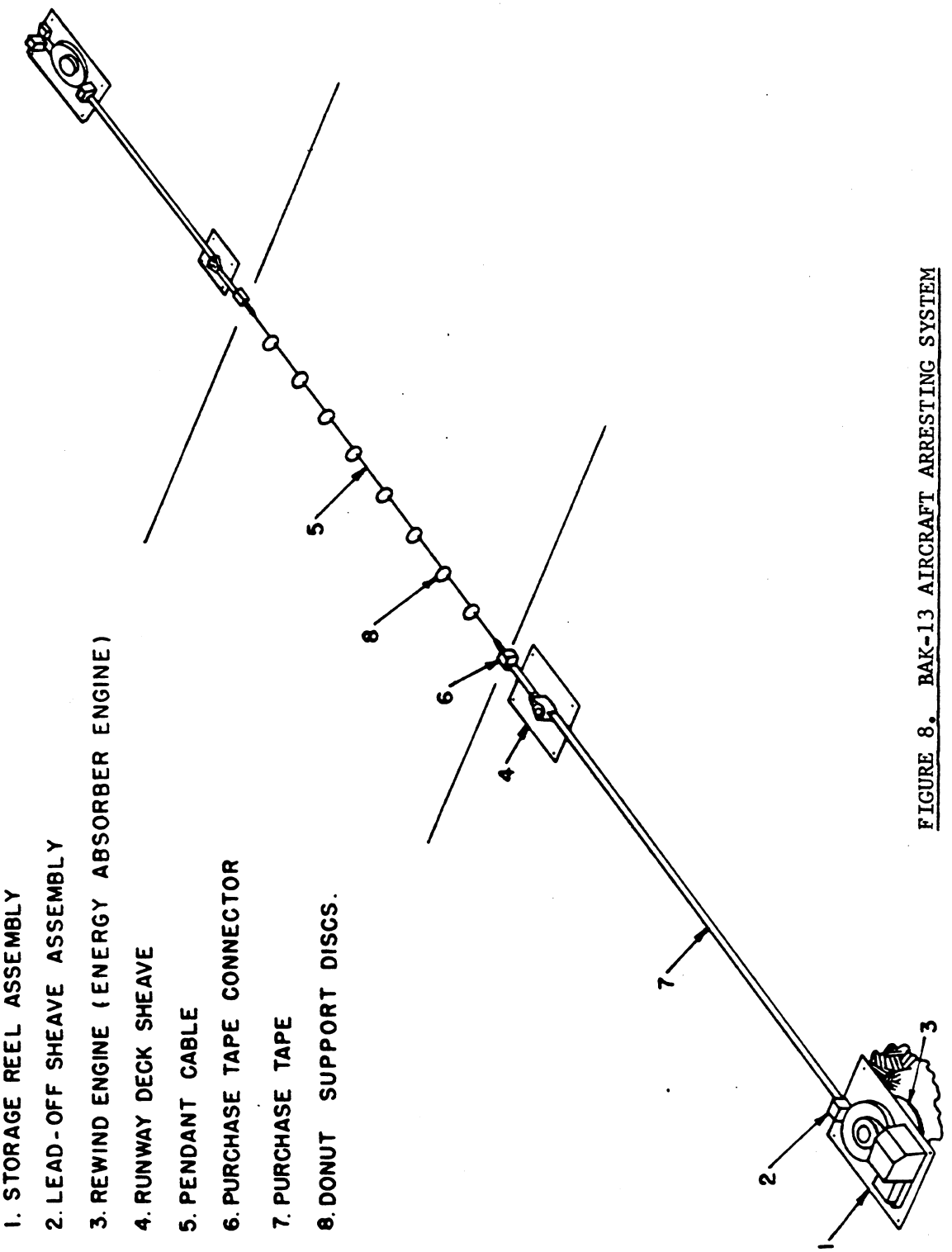

LEGEND

1. STORAGE REEL ASSEMBLY
2. LEAD-OFF SHEAVE ASSEMBLY
3. REWIND ENGINE (ENERGY ABSORBER ENGINE)
4. RUNWAY DECK SHEAVE
5. PENDANT CABLE
6. PURCHASE TAPE CONNECTOR
7. PURCHASE TAPE
8. DONUT SUPPORT DISCS.

FIGURE 8. BAK-13 AIRCRAFT ARRESTING SYSTEM

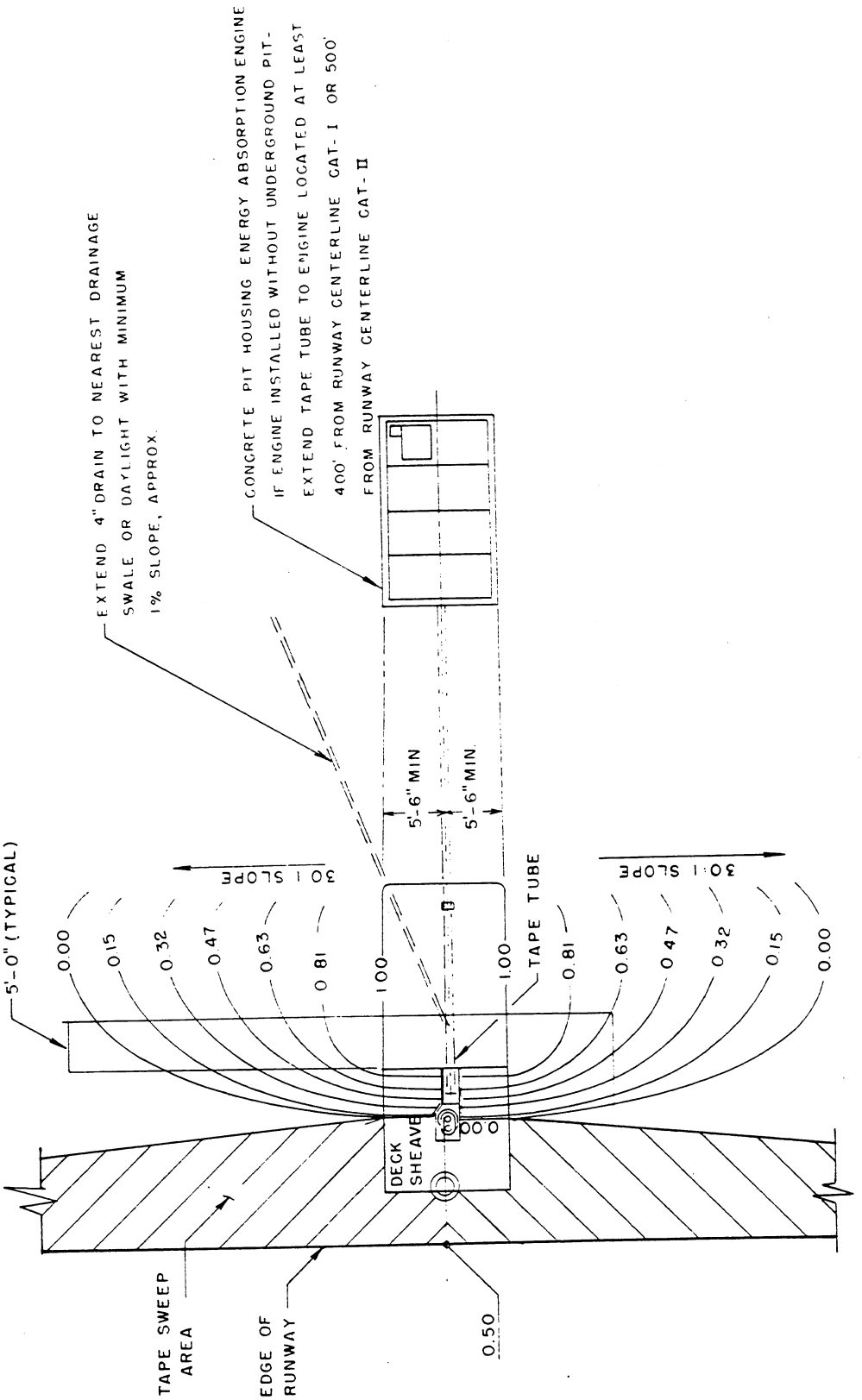

FIGURE 1. BAK-12 INSTALLATIONS AT JOINT-USE AIRPORTS

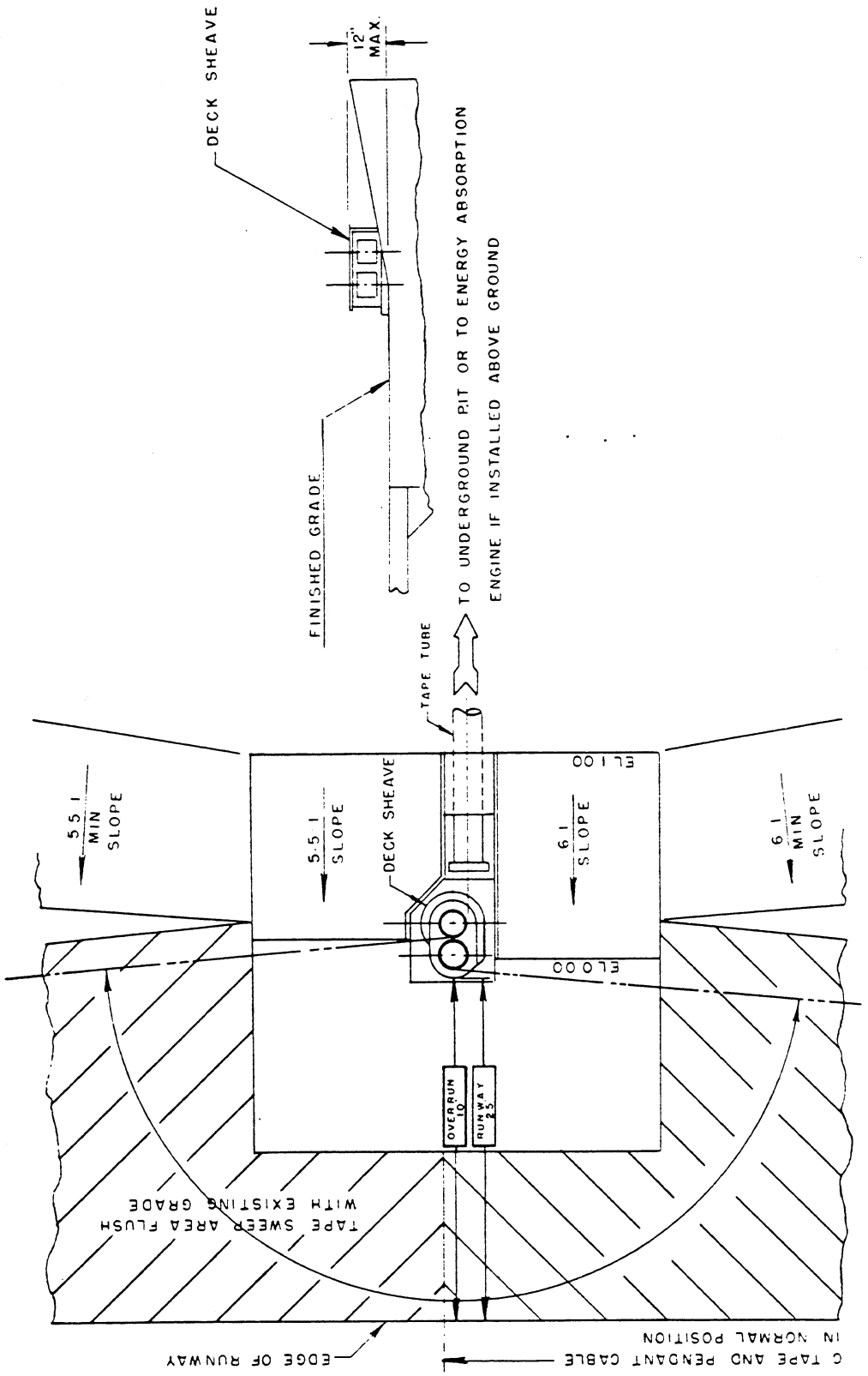

FIGURE 2. BAK-12 INSTALLATIONS AT JOINT-USE AIRPORTS

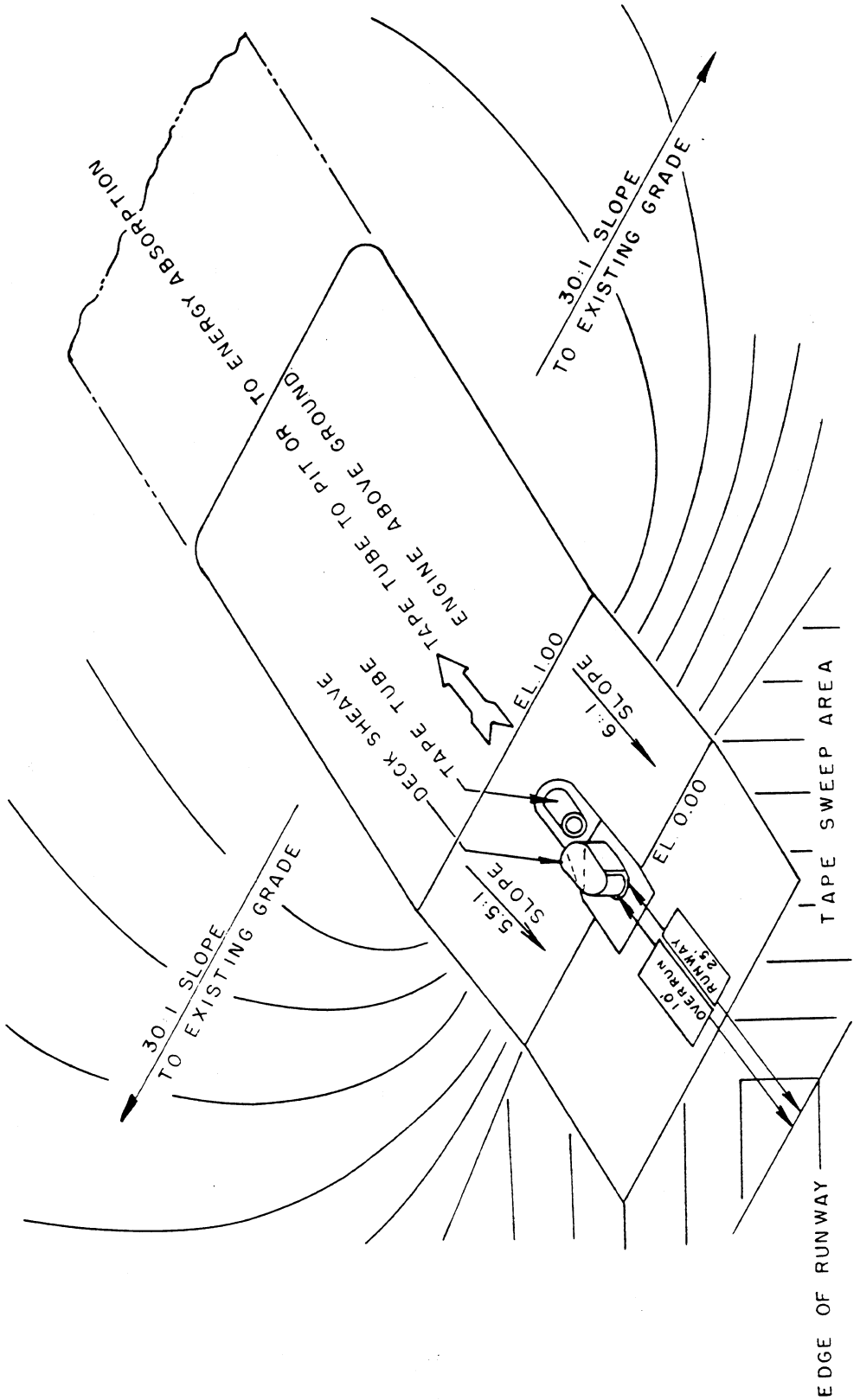

FIGURE 3. BAK-12 INSTALLATIONS AT JOINT-USE AIRPORTS

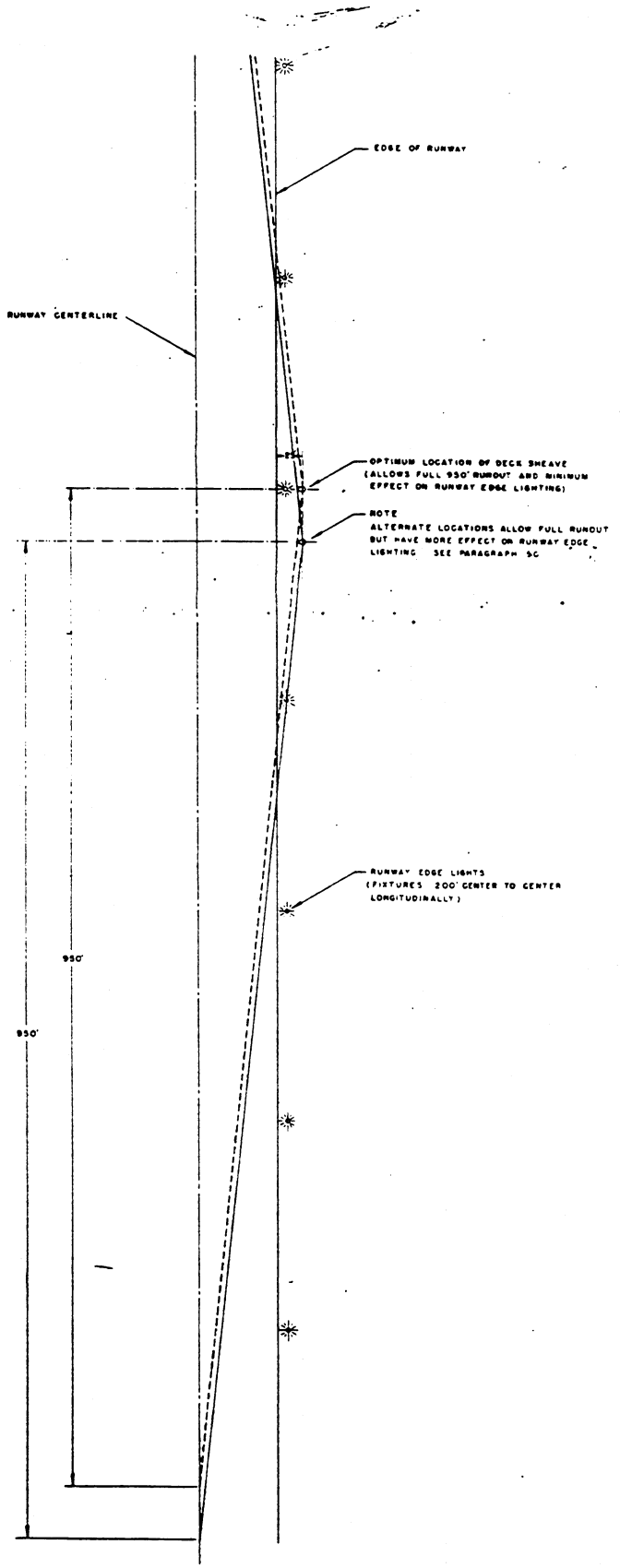

FIGURE 4. PLAN VIEW OF RUNWAY SHOWING OPTIMUM AND A TYPICAL ALTERNATE LOCATION OF DECK SHEAVE WHERE NECESSARY TO INSTALL ACROSS RUNWAY

1. The location of aircraft arresting device pendant cables which cross operating runway pavement will be marked as described below:

   The pendant cable location will be marked when the cable crosses the operational portion of a runway. This includes pendant cables on the approach side of displaced threshold when the pavement is used for the movement of aircraft. It does not include marking on paved overruns not normally used for aircraft movement.

2. The location of the cables as described above will be indicated by a series of reflective discs ten feet in diameter (painted "identification yellow" solid circles on the runway). These discs will be 30 feet on centers and will extend the full width of the runway. The system will be laid out with a center disc on the runway centerline as shown below.

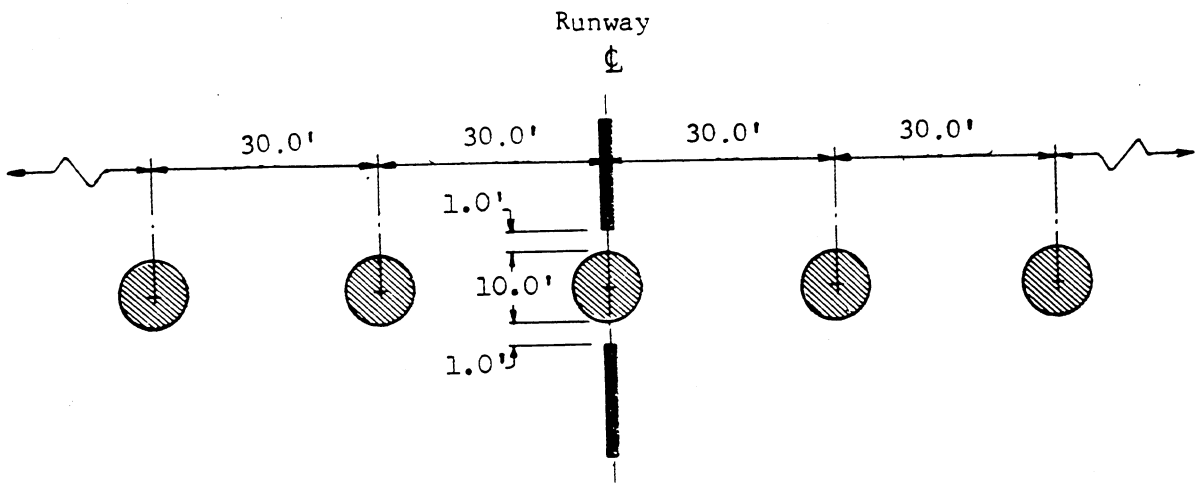

PENDANT CABLE MARKING

When interference occurs with the centerline marking, this marking may be interrupted with a clearance of one foot to the edge of the discs. Consideration should be given to relocating the "donut" supported cross-runway pendant (cable) to avoid interference with the touchdown zone marking and lighting.

FIGURE 5. CRITERIA FOR MARKING THE LOCATION OF AIRCRAFT ARRESTING BARRIER PENDANT CABLES