CHANGE

U.S. DEPARTMENT OF TRANSPORTATION
FEDERAL AVIATION ADMINISTRATION

8260.19C CHG 1

9/18/98

SUBJ: FLIGHT PROCEDURES AND AIRSPACE

1. PURPOSE. This change transmits revised pages to Order 8260.19C, Flight Procedures and Airspace.

2. DISTRIBUTION. This order is distributed in Washington headquarters to the branch level of the offices of System Safety, Aviation Policy and Plans, Air Traffic Systems Development, Aviation Research, Communications, Navigation, and Surveillance Systems, Airport Safety and Standards; to Flight Standards, Air Traffic, and Airway Facilities Services; and to the National Flight Data Center (NFDC); to the National Flight Procedures Office, the National Airway Systems Engineering, and Regulatory Standards Divisions at the Mike Monroney Aeronautical Center; to the branch level in the regional Flight Standards, Air Traffic, Airway Facilities, and Airports Divisions; to all Flight Inspection Offices; International Flight Inspection Office; the Europe, Africa, and Middle East Area Office; Flight Standards District Airway Facilities Field Offices; special mailing list ZVN-826; and Special Military and Public Addressees.

3. CANCELLATION. This change cancels Order 8260.25B, Implementing Epoch Year Magnetic Variation Values, dated February 11, 1986.

4. EXPLANATION OF CHANGES.

a. **Portions of Chapters 1, 2, and 3 are rewritten** to reflect organizational changes and reassignment of responsibilities of the Flight Standards Service (AFS) and the Aviation System Standards (AVN).

b. **Responsibilities of the National Flight Data Center (NFDC)** are more clearly defined.

c. **Computer Generated Forms.** Modifies instructions for the use of computer generated forms in the development of instrument procedures.

5. DISPOSITION OF TRANSMITTAL. After filing, this change transmittal should be retained.

PAGE CONTROL CHART

REMOVE PAGES	DATED	INSERT PAGES	DATED
1-1 thru 1-10	9/16/93	1-1 thru 1-9	9/18/98
2-1 thru 2-32	9/16/93	2-1 thru 2-28	9/18/98

Distribution: A-W(SY/PO/UA/AR/ND/AS/AT/FS/AF)-3; ATA-100(15CYS); AVN-100(150CYS); **Initiated By:** AFS-400 AOS-200(10CYS); AMA-200(80CYS); A-X(FS/AT/AF/AS)-3; A-FFS-4(ALL); AEU-1(10CYS); A-FFS-7(STD); A-FAF-2/3/7(STD); ZVN-826; Special Military and Public Addressees

PAGE CONTROL CHART

REMOVE PAGES	DATED	INSERT PAGES	DATED
3-3 and 3-4	9/16/93	3-3 and 3-4	9/18/98
3-7 thru 3-12	9/16/93	3-7 thru 3-12	9/18/98

Richard O. Gordon
Acting Director, Flight Standards Service

CHAPTER 1. ADMINISTRATIVE

SECTION 1. GENERAL

100. PURPOSE

This order provides guidance to all FAA personnel for the administration and accomplishment of the FAA Flight Procedures and Airspace Program.

101. DISTRIBUTION.

This order is distributed to offices on special mailing list ZVN-826.

102. CANCELLATION. Order 8260.19B, Flight Procedures and Airspace, dated December 18, 1991, is canceled.

103. EXPLANATION OF CHANGES.

a. **Use of maps and charts clarified.**

b. **Expanded service volume (ESV)** distribution modified.

c. **Use of Notice to Airmen (NOTAM)** system modified.

d. **Airway NOTAM'S** introduced with examples.

e. **Periodic (annual) standard instrument approach procedure (SIAP)** review interval extended to two years; airway review interval to four years.

f. **Instrument Approach Procedures Automation (IAPA)** procedure development and storage clarified.

g. **Instructions for reporting IAPA** equipment or communications problems added.

h. **All references to control zones** changed to "Class B/C/D/E Surface Areas;" and references to transition areas changed to "Class E 700' airspace."

i. **Flight Inspection Office (FIO)/Air Traffic Control (ATC)** actions regarding minimum vector altitude (MVA) / Minimum IFR Altitude (MIA) charts clarified.

j. **Instructions regarding area navigation (RNAV)** feeder routes incorporated.

k. **Requirement for drawings** with airspace packages deleted.

l. **Rounding convention clarified.**

m. **Terminal distance measuring equipment (DME)** fix designations clarified.

n. **"LOC only" notation clarified.**

o. **Alternate minimums notation clarified.**

p. **Dual minimums notes clarified.**

q. **Inoperative component notes clarified.**

r. **Automatic weather observation system (AWOS)** instructions modified.

s. **Additional flight data block** instructions for LORAN-C added.

t. **FAA Form 8260-2** controlling obstruction documentation clarified.

u. **FAA Form 8260-9** required obstruction clearance (ROC) and height of missed approach surface (HMAS) documentation clarified.

v. **FAA Form 8260-16** changeover point (COP) instructions clarified; flight inspection date and cancellation instructions clarified.

w. **Numerous flight procedure** references added to appendix 1.

x. **FAA 8260-series forms examples udpated.**

104. FORMS.

a. The following forms are stocked at the FAA Logistics Center (AML), or provided in electronic form for use in the development and maintenance of flight procedures

FAA FORM NUMBER	TITLE	NATIONAL STOCK NUMBER(NSN)	UNIT OF ISSUE
FAA Form 8260-1	Flight Procedures Standards Waiver	0052-00-661-8001	SH
FAA Form 8260-2	Radio Fix and Holding Data Record	0052-00-606-9001	SH
FAA Form 8260-3	ILS-Standard Instrument Approach Procedure	0052-00-691-2003	SH
FAA Form 8260-4	Radar-Standard Instrument Approach Procedure	0052-00-691-3001	SH
FAA Form 8260-5	Standard Instrument Approach Procedure	0052-00-677-7002	SH
FAA Form 8260-7	Special Instrument Approach Procedure	0052-00-684-3001	SH
FAA Form 8260-8	Form Letter for Coordination of SIAP	0052-00-683-5000	SH
FAA Form 8260-9	Standard Instrument Approach Procedure Data Record	0052-00-684-6000	SH
FAA Form 8260-10	Standard Instrument Approach Procedure (Continuation Sheet)	0052-00-691-4002	SH
FAA Form 8260-11	U.S. Army ILS Standard Instrument Approach Procedure	0052-00-803-1001	SH
FAA Form 8260-12	U.S. Army Radar Standard Instrument Approach Procedure	0052-00-803-2001	SH
FAA Form 8260-13	U.S. Army Standard Instrument Approach Procedure	0052-00-803-3001	SH
FAA Form 8260-15	Departure Procedures/Takeoff Minimums	0052-00-838-8001	SH
FAA Form 8260-16	Transmittal of Airways/Route Data	0052-00-634-4001	SH
FAA Form 8260-20	U.S. Army Standard Instrument Approach Procedure(Continuation Sheet)	0052-00-856-5000	SH
FAA Form 8260-21	U.S. Army Departure Procedures/ Takeoff	0052-00-856-6000	SH
FAA Form 8260-22	MLS-Standard Instrument Approach Procedure	0052-00-889-8000	SH

b. Computer Generated Forms. Most FAA forms used in the development of instrument procedures can be automated through the use of an approved electronic forms software package.

(1) Implementation. The implementation of this system will reduce the errors and tedium of filling procedures forms either by hand or the typewriter. This system also allows information to be extracted from sources such as text files and other databases.

(2) Use of Automated Forms. This automated process allows each user to fill in forms completely and accurately, and to print the forms. AFS-420 provides administrative control over any modification of the automated forms. Direct any recommendations for changes or modifications to the Flight Procedure Standards Branch, AFS-420, with a courtesy copy to the Automation Technology Branch, AVN-22A.

(3) Equipment Requirements. Each user office must have access to the appropriate hardware/software to use automated electronic forms software. Contact AVN-22A for more specific requirements.

(4) System Description. This electronic form processor has a visual interface and allows each user to work with forms using windows, pictures, and menus on a screen. The completed screen data and form may be printed on bond paper.

c. IAPA Generated Forms. Refer to chapter 2, section 13.

105. TERMS AND DEFINITIONS.

For the purpose of this order, flight procedures are identified as the functions for predetermining safe and practical methods of navigating aircraft which prescribe intended flight tracks, operational altitudes, and arrival/departure minimums. Flight procedures are subdivided into six general categories as follows: departure procedure, en route, instrument approach, missed approach, holding, and fix descriptions. The following words have the meaning shown:

a. May – action is permissible

b. Shall - action is mandatory.

c. Should – action is desirable.

d. Will – indicates a presumption that action is to be taken.

e. AWOP – All Weather Operations Program.

f. 14 CFR – Title 14 of the Code of Federal Regulations.

g. FICO – Flight Inspection Central Operations, AVN-280.

h. FIO – Flight Inspection Office.

i. FPO – Flight Procedures Office.

j. IAPA – Instrument Approach Procedures Automation.

k. Miles – nautical miles unless otherwise specified.

l. NFD – National Flight Data Center, ATA-110.

m. NTAP – Notices to Airmen Publication.

n. NFPO – National Flight Procedures Office, AVN-100.

o. SIAP – Standard Instrument Approach Procedure.

p. USNOF – U.S. NOTAM Office.

106. INFORMATION CURRENCY.

a. Forward for consideration any deficiencies found, clarification needed, or suggested improvements regarding the contents of this order to:

DOT/FAA
Flight Procedure Standards Branch, AFS-420
P.O. Box 25082
Oklahoma City, OK 73125

b. Your assistance is welcome. FAA Form 1320-9, Directive Feedback Information is included at the end of this order for your convenience If an interpretation is needed immediately, you may call the originating office for guidance. However, you should use the FAA Form 1320-9 as a follow-up to the verbal conversation.

c. Use the "Other Comments" block of this form providing a complete explanation of why the suggested change is necessary.

107-109. RESERVED

SECTION 2. RESPONSIBILITIES

110. FLIGHT STANDARDS SERVICE (AFS-1)

a. Flight Standards Service is responsible for the use of air navigation facilities, appliances, and systems by aircraft operating in established environments and the National Airspace System (NAS). Responsibility includes governing policy and oversight of manual and automated development and maintenance of terminal and en route flight procedures. The director has final authority to issue, amend, and terminate rules and regulations relating to instrument procedures, minimum en route altitudes, flight procedures, operational weather minimums, and minimum equipment requirements.

b. Responsibility for the overall management of the Flight Procedures and Airspace Program is vested in the Flight Technologies and Procedures Division (AFS-400). This order is primarily concerned with those offices having direct responsibility for the accomplishment of the Flight Procedures and Airspace Program. The following is a brief description of their activities.

111. FLIGHT TECHNOLOGIES AND PROCEDURES DIVISION (AFS-400).

a. This division is the principal element of the Flight Standards Service governing policies, criteria, and standards for establishing and maintaining terminal and en route flight procedures; for using air navigation facilities, appliances, and systems; and for certification of IAPA software. This office is designated as the final authority to issue, amend and appeal minimum en route IFR altitudes and associated flight data under 14 CFR part 95 and standard instrument approach procedures under 14 CFR part 97. The division is also responsible for approval/disapproval of special instrument approach procedures and requests for waivers of standards.

b. The Flight Operations Branch, AFS-410, is the principal element of the division with respect to concepts, policies, systems, and programs associated with the operational and flight technical aspects of all weather operations. It develops concepts for design, evaluation, and approval of Category I, II, and III approach and landing operations, as well as lower than standard takeoff minimums.

c. The Flight Procedure Standards Branch, AFS-420, is the principal element within the division, with respect to the rulemaking process of the Flight Procedures Program; also with respect to the development, application, and oversight of national policies and directives for the administration of the national flight procedures program, and development of criteria pertinent to the design of instrument flight procedures; and with respect to testing, data analysis, verification, and validation of navigation systems and concepts. This branch serves as the focal point within Flight Standards for all matters relating to airspace and cartographic programs, and is the primary interface for industry on matters relating to instrument procedures criteria. It participates as the division focal point in the waiver review process, soliciting comments from appropriate FAA offices, providing operational input, and recommending the division final waiver approval/disapproval. The branch provides technical advice and assistance to other FAA elements, government agencies, and industry on the interpretation and application of criteria. It analyzes and evaluates execution of flight procedure programs within the FAA to determine compliance with national policy. It also provides for the technical evaluation and risk assessment of proposed instrument operations not covered by standard criteria.

112. REGIONAL FLIGHT STANDARDS DIVISIONS (AXX-200)

a. The Regional Flight Standards Divisions (FSD) manage and direct the geographic regions' air carrier, general aviation and all weather operations programs. Each FSD provides the regional implementation of national concepts, policies, standards, systems, procedures and programs with respect to the operational and flight technical aspects of the all weather operations program.

b. The all weather operations program responsibilities include but are not limited to the following:

(1) Establishing regional requirements for, and managing distribution of, special instrument approach procedures. Receiving and resolving user/industry comments on new and revised special instrument approach procedures.

(2) Providing technical evaluations in support of regional airspace programs to determine the effect on visual flight operations.

(3) Coordinating the FSD portion of assigned foreign instrument approach procedures programs.

(4) Coordinating the FSD involvement in Category II and III approvals including approval of the associated Surface Movement Guidance System plan.

(5) Providing the operational input on matters related to regional capacity studies and airport operational safety initiatives.

(6) Performing airport/airspace evaluations to address operational safety issues in coordination with Airports Division, as necessary.

(7) Providing the consolidated FSD position for review of charted visual flight procedures.

(8) Coordinating with Airports Division in the approval or denial of modifications to airport standards.

(9) Providing operational review and comments for Airway Facilities Division's submission of a NAS Change Proposal (NCP).

(10) When requested by the FPO, assists in developing the equivalent level of safety for an AVN originated procedures waiver.

113. AVIATION SYSTEM STANDARDS (AVN).

a. AVN is the principal element within Airway Facilities Service (AAF) directly responsible for the in-flight inspection of air navigation facilities and for the development and maintenance of instrument flight procedures throughout the United States and its territories. It is responsible for input to the regional Airway Facilities Division Facilities and Equipment (F&E) budget submission with respect to terminal air navigation aids (other than radar) and visual approach aids. Additionally, AVN supports the Air Traffic Services (ATS) obstruction evaluation and airport airspace analysis (OE/AAA) program.

b. The National Flight Procedures Office, AVN-100, is the AVN element responsible for the development, maintenance, quality control, and technical approval of public-use instrument procedures. It is also responsible for quality control and technical support, as requested, for NAS related products. Upon completion of instrument procedures development, the division forwards completed documentation to the FICO for flight inspection and operational approval. Establishes procedures to ensure GPS data is included in the national database. Responsibilities include but are not limited to:

(1) Forwarding industry and user comments on instrument procedures to the appropriate branch manager for evaluation and processing.

(2) Coordinating requests for new instrument procedures service with the respective regional division and other concerned offices, and conducting instrument procedures feasibility studies.

(3) Coordinating submission by responsible offices of all pertinent data and supporting documents required for procedures development and assignment of priority when further procedures action is required.

(4) Planning and coordinating new or relocated NAS facilities.

(5) Coordinating with regional divisions to select a charting date consistent with priorities and workload when a component of the National Airspace System (NAS) is to be commissioned, decommissioned, or altered.

(6) Coordinating the input for the planning and development of regional F&E budget submissions and programming actions.

(7) Analyzing obstruction evaluations to determine the effects on current and planned instrument flight operations, minimums, and/or flight altitudes of all civil, joint-use, and U.S. Army instrument procedures in accordance with current policy.

(8) Evaluating regional airport and airspace matters.

(9) Determining the necessity for environmental impact studies as required by current policy.

(10) **Acting as focal point** for flight inspection problems within the region.

c. **The Flight Inspection Operations Division, AVN-200,** is the AVN element responsible for flight inspection of navigation aids and flight procedures in support of the NAS. The division initiates and completes investigative remedial action with respect to any deficiency or reported hazard, including restrictions or emergency revisions to procedures. It maintains liaison with AVN-100, as well as other FAA offices, civil and military interests, to ensure consideration of all requirements relating to the procedural use of navigation facilities. It maintains a suitable record system reflecting the status of each flight procedure with required supporting data.

114. AERONAUTICAL INFORMATION SERVICES (ATA-100).

a. **This is the principal element within Air Traffic Service (AAT)** directly responsible for managing the agency's program to provide aeronautical infor-mation services to ensure the flow of information necessary for safety, regularity, and efficiency of air navigation. This division is charged with the responsibility for collecting, collating, validating and disseminating aeronautical data regarding the United States and its territories. It is also a source for technical assistance to AVN regarding data base accuracy standards, content, and format. This division also serves as the primary interface between the FAA and the National Oceanic and Atmospheric Administration for government aeronautical charting services.

b. **The National Flight Data Center, ATA-110,** is the principal element within ATA-100 with respect to maintaining the national aeronautical information data base and for disseminating information relating to the NAS. NFDC responsibilities include but are not limited to:

(1) **Publishing the daily National Flight Data Digest (NFDD)** to promulgate additions, changes, and deletions to elements of the NAS.

(2) **Conducting pre-publication review** of aeronautical data contained in standard instrument approach and departure procedures, standard terminal arrival routes, standard instrument departures, military training routes, navigational aids, airport data, and airspace actions submitted for action, and to identify and correct items in non-conformance with applicable directives.

(3) **Validating submitted data** with the National Data Base and resolving contradictions.

(4) **Reviewing, processing for transmittal,** and tracking NOTAM's regarding amendments, cancellations, and corrections to instrument procedures in the NAS and canceling these NOTAM's when government charts are updated.

(5) **Compiling NOTAM's** for publication in the Notices to Airmen Publication (NTAP).

(6) **Managing the development** and assignment of five-letter fix names and NAVAID/airport identifiers.

(7) **Promulgating SIAP's** with assigned effective dates in a bi-weekly transmittal letter and completing necessary requirements for publication in 14 CFR part 97.

(8) **Issuing, on a predetermined schedule,** amendments to 14 CFR part 95.

(9) **Maintaining copies** of 8260 and 7100 series forms that support public use SIAP's, fixes, airways, STAR's and DP's (SID's).

115. INDIVIDUAL.

Personnel working within the Flight Procedures Program are responsible for maintaining professional knowledge in a technical, complex, and specialized field, and for the application of the knowledge to assure safety and practicality in air navigation. Where directives are deficient, each individual shall take the initiative to seek an acceptable method of resolution and to inform the responsible office of any recommended change to policy, procedures, etc., that is cost beneficial and/or provides increased operational safety.

SECTION 3. INSTRUMENT APPROACH PROCEDURES AUTOMATION (IAPA) RESPONSIBILITIES

120. BACKGROUND.

a. The FAA has developed IAPA to automate the mechanics of the Instrument Flight Procedures Program to include the development, review, storage, and electronic transmittal of instrument flight procedures with ancillary system benefits.

b. The IAPA system standardizes the application of criteria specified in FAA Order 8260.3, United States Standard for Terminal Instrument Procedures (TERPS); FAA Order 8260.19, Flight Procedures and Airspace; and other appropriate directives, advisory circulars, and Federal Aviation Regulations. IAPA applies established FAA software standards. IAPA software provides for application of standardized data and data accuracy standards in the development of instrument flight procedures.

c. IAPA includes obstacles, terrain, NAVAID, fix, holding, airport, and runway data that are available to system users. IAPA is included in the FAA's Capital Investment Plan (CIP). Procedures for controlling changes to this system will be in accordance with FAA Order 1370.52, Information Resources Policy.

121. AVIATION SYSTEM STANDARDS RESPONSIBILITY.

The Aviation System Standards, AVN-1, is the office of primary interest and is responsible for overall functional management of the IAPA system and has been delegated responsibility for certification of IAPA software (see paragraph 121b(7)).

a. The Resource Management Staff, AVN-20, is responsible for establishing policy guidance in the administrative control of IAPA, as well as coordinating actions required to meet changing legal and user requirements. In addition, this division is responsible for:

(1) Carrying out the development of IAPA by coordinating the efforts of users, developers, operators, and contractors associated with IAPA.

(2) Managing and reporting on project schedules, costs, and other supporting resources for the Airway Facilities Service (AAF) Information Resource Manager.

(3) Establishing and maintaining a positive change control management system through the developmental and implementation phases to assure that the completed project (the operational IAPA system) meets the requirements of the system definition.

(4) Determining that all proposed changes are essential to the development task and are coordinated among all prospective users of the system.

(5) Keeping contracting officers advised, if appropriate, on proposed changes in order that the officer may be alerted to the impact that they may have on current or proposed contractual actions.

(6) Preparing for and participating in operational tests and evaluations of the information system.

b. The Automation Technology Branch, AVN-22, is responsible for assuring the successful ongoing operation of the data system. In the performance of these responsibilities, the Automation Technology Branch shall:

(1) Establish and maintain a positive change control management system to assure that all changes to the operational IAPA system are cost effective and are coordinated among all parties who use IAPA.

(2) Develop necessary guidelines for the control and dissemination of data from IAPA and other assigned systems.

(3) Authorize release of data in special cases where guidelines are not available.

(4) Provide for coordination in data systems where several program elements share primary operational interest.

(5) **Establish priorities** for task assignments, scheduling, and utilization of personnel and physical resources.

(6) **Assure system configuration**, documentation, and reliability.

(7) **Conduct extensive operational testing** and debugging, to assure system software is in conformance with Order 8260.3, United States Standard for Terminal Instrument Procedures (TERPS) and other appropriate directives, advisory circulars, and 14 CFR provisions. Conduct final system certification of software before release to users through coordination with AFS-420.

(8) **Review national user requirements** and approve system modifications.

(9) **Ensure that the provisions** of FAA Order 1600.54B, FAA Automated Information Systems Security Handbook, are complied with in the security control of computer programs and associated documentation.

c. **The Flight Inspection Technical Support Branch, AVN-210**, is responsible for establishing and maintaining the Aviation Standards Information System (ASIS) in support of IAPA requirements.

d. **AVN-100 is responsible** for final certification of instrument flight procedures to include that:

(1) **Data used to develop** the instrument approach procedure was correct.

(2) **The instrument approach procedure** was developed in accordance with FAA Order 8260.3; Order 8260.19, Flight Procedures and Airspace; and other appropriate directives, advisory circulars, and Federal Aviation Regulations listed in appendix 1.

(3) **The appropriate Flight Procedures Standards Waiver**, if required, is on file.

122. OFFICE OF INFORMATION SERVICES RESPONSIBILITY.

The Office of Information Services, AMI-1, is responsible for the software development from its inception through implementation. It is also responsible for maintenance of system software, and shall provide and control automatic data processing (ADP) resources which include:

a. **The utilization of personnel** (including contract personnel) and physical resources.

b. **Providing technical consultation** and advice as required.

c. **Providing telecommunications support**, and other necessary ADP enhancement and support services for IAPA.

d. **Participating in the review** of site preparation, installation, and testing support as required.

e. **Providing on-site hardware** and software installation and testing support as required.

f. **Providing preliminary testing** of software to assure conformance with the United States Standard for Terminal Instrument Procedures and other appropriate directives, advisory circulars, and Federal Aviation Regulations as advised by the program office.

123. OFFICE OF INFORMATION TECHNOLOGY RESPONSIBILITY.

The Office of Information Technology, AIT-1, will develop governing policies and responsibilities for automatic data processing (ADP) program management in accordance with Order 1370.52, Information Resources Policy.

124. DIRECTOR, AIRWAY FACILITIES SERVICE.

The Director, Airway Facilities Service, AAF-1, is responsible for the determination of agency-wide priorities for use and control of telecommunications resources needed to support IAPA. This responsibility is administered through the Telecommunications Integrated Product Team in the NAS Operations Program (AOP) of Airway Facilities.

125-199. RESERVED.

CHAPTER 2. GENERAL PROCEDURES

SECTION 1. GENERAL

200. GENERAL.

This chapter provides guidelines and procedures which are common to all instrument flight procedures. Specific guidelines and procedures for en route and terminal instrument flight procedures are contained in chapters 3 and 4, respectively.

201. REQUESTS FOR PUBLIC-USE INSTRUMENT FLIGHT PROCEDURES.

a. **Requests for approval** and/or establishment of instrument flight procedures may originate from many different sources. It may be a request from a state, city, airport manager, or an individual. It may also be from an air carrier, air taxi, military, commercial operator, Air Traffic Control (ATC), or AFS personnel. See Order 8260.3, paragraph 121.

b. **All requests for public-use instrument flight procedures** received by any FAA office shall be forwarded to AVN-100 for further handling. Requirements for approval of instrument approach procedures are contained in Chapter 1 of Order 8260.3.

c. **Procedures with specific effective dates**, and other urgent projects, will be assigned priorities by AVN-100. All other projects will be processed as workload permits, in order of AVN-100 receipt.

202. AIR TRAFFIC LETTERS OF AGREEMENT.

When letters of agreement affect or include flight procedures, they must be coordinated between ATC facilities and AVN-100.

a. **When these letters are received**, AVN-100 shall review them to ensure compatibility with published or planned flight procedures.

b. **Copies of letters of agreement** received in AVN-100 shall be made a part of the procedure files, to serve as a reference when developing or amending flight procedures.

c. **When the terms of the letters of agreement** and flight procedures are not compatible, or if it is determined that the terms do not comply with criteria, AVN-100 shall return the letters to the ATC facility with a memorandum which explains the findings. When appropriate and practical, consideration should be given to adjusting the procedures to accommodate the terms of the agreement.

d. **Normally, a letter of agreement** is an agreement between two or more ATC facilities. Unless AVN-100 is a party to the agreement, it is not a signatory and does not approve or disapprove the agreement.

203. AIRPORT LIGHTING AND VISUAL AIDS.

a. **Operation of airport lighting** and visual aids is contained in Orders:

(1) **7110.10, Flight Services.**

(2) **7110.65, Air Traffic Control.**

(3) **7210.3, Facility Operation and Administration.**

b. **Installation criteria** are contained in Order 6850.2, Visual Guidance Lighting Systems.

c. **Refer to appendix 1,** Flight Procedures References, for other applicable orders and advisory circulars.

SECTION 2. AERONAUTICAL CHARTS

204. USE OF MAPS AND CHARTS.

a. AVN-100 should maintain an adequate supply of current charts to support the development of instrument procedures within its area of responsibility. For manual application, the largest scale charts available should be used to develop final, circling, and the first part of the missed approach segment. For precision approach procedures, the Airport Obstruction Chart (OC), a WAAS precision survey, or an equivalent plan and profile chart, is recommended for use. For all approach procedures, the 7 1/2 and 15 minute quadrangle topographic charts (Quads) produced by the U.S. Geological Survey provide excellent source for determining terrain elevation. For efficiency in procedure design and flight inspection, 1:100,000 scale planimetric/topographical (topo) charts are also authorized. Use other data sources such as IAPA, AMIS, Quarterly Obstacle Memo, Digital Terrain Elevation Data (DTED), Digital Elevation Model (DEM), etc., in addition to on-site obstacle assessment evaluations, where necessary. The Sectional Aeronautical Chart (scale 1:500,000) and the VFR Terminal Area Chart (scale 1:250,000) are good supporting source documents; however, they may not depict all current information because of the extended charting cycle.

b. Charting requirements for inclusion in a flight inspection package should be determined from the Flight Inspection Policy and Standards Branch (AVN-230). See FAA Order 8200.1, United States Standard Flight Inspection Manual, paragraph 214.2.

205. AERONAUTICAL CHARTS AND PUBLICATIONS.

a. Aeronautical charts used for air navigation are generally of two groups: VFR charts and IFR charts. The VFR charts are the Sectional and VFR Terminal Area charts and the visual navigation chart. IFR charts are the En Route Low and High Altitude, Area, Instrument Approach Procedure, DP/SID, and STAR charts.

b. The primary publication which contains basic flight information related to instrument operations in the NAS is the Aeronautical Information Manual (AIM). The primary publication serving as a preflight and planning guide for use by U. S. nonscheduled operators, business, and private aviators flying outside of the United States is the Aeronautical Information Publication (AIP). AFS-420 personnel should conduct surveillance of the AIM and AIP to verify the accuracy and appropriateness of the information therein.

c. AVN-100 personnel should monitor charts or publications released by FAA which provide informative material, recommended or mandatory, to determine that safe operating practices and conditions are accurately described for aviation users.

d. AVN-100 is responsible for the accuracy and completeness of flight data submitted by that office for publication. Procedure specialists should review the resulting NOS charts to ensure correct portrayal. AVN-100 serves as the focal point for questions about the data published on these charts.

e. Any FAA personnel, who find or are notified of discrepancies and/or errors in aeronautical charts, the AIM, or AIP, should forward the information to AFS-420, or the NFDC.

SECTION 3. ENVIRONMENTAL REQUIREMENTS

206. NOISE ABATEMENT.

The establishment of noise abatement procedures is the responsibility of Air Traffic Service. However, the Flight Standards Service has an input from an aircraft operational standpoint. These procedures should be coordinated between the appropriate regional FSD and the regional FPO. The regional FSD shall review noise abatement procedures for aircraft performance characteristics and operational safety considerations. The regional FPO shall review these procedures for practicality and adherence with applicable criteria, and has the primary responsibility for resolving conflicts between IFR procedures and existing or proposed noise abatement procedures.

207. ENVIRONMENTAL IMPACTS.

FAA Order 1050.1, Policies and Procedures for Considering Environmental Impacts, describes the requirements for documentation of environmental impact or lack of impact concerning actions taken by regional FPO's. In particular, appendix 4 of the document defines actions that require an environmental assessment or a declaration of categorical exclusion. [See also paragraph 800.] AVN will normally act as responsible federal official (RFO) for all AVN and non-AVN developed procedures. In such capacity, AVN shall apply national environmental standards and policies. However, AFS reserves the right to act as RFO for selected non-AVN developed procedures.

SECTION 4. FACILITY UTILIZATION AND MONITORING

208. FREQUENCY SERVICE VOLUMES.

In establishing instrument flight procedures, consideration must be given to the type of navigation facilities available and to their limitations.

a. All electronic navigation facilities are installed in accordance with frequency separation specified in distances and altitudes. Specific frequency protected service volumes are contained in Order 6050.32, Spectrum Management Regulations and Procedures Manual. This order is primarily used by the Regional Frequency Management Officer (FMO). AVN-100 should maintain a copy of Order 6050.32 on file to facilitate understanding and coordination of operational considerations associated with expanded service volumes.

b. Operational service volume includes the standard service volume (SSV) and expanded service volumes (ESV's). The operational service volume shall not extend outside the frequency protected service volume on any radial, at any distance, or at any altitude.

209. ATC USABLE DISTANCE AND ALTITUDE LIMITATIONS.

When flight procedures are developed which reach outside of the standard service volumes listed below, the submission and processing of an FAA Form 6050-4, Expanded Service Volume Request, is mandatory. Flight check measurements shall not be used as a substitute for an approved ESV. See figures 2-1, 2-2, and 2-3.

a. VOR/VORTAC/TACAN

Facility Class	Usable Height Above Facility	Usable Distance (Miles)
T	12,000 and below	25
L	18,000 and below	40
H	60,000-45,000	100
	Below 45,000-18,000	130
	Below 18,000-14,500	100
	Below 14,500	40

NOTE: All elevations shown are with respect to the station's site elevation.

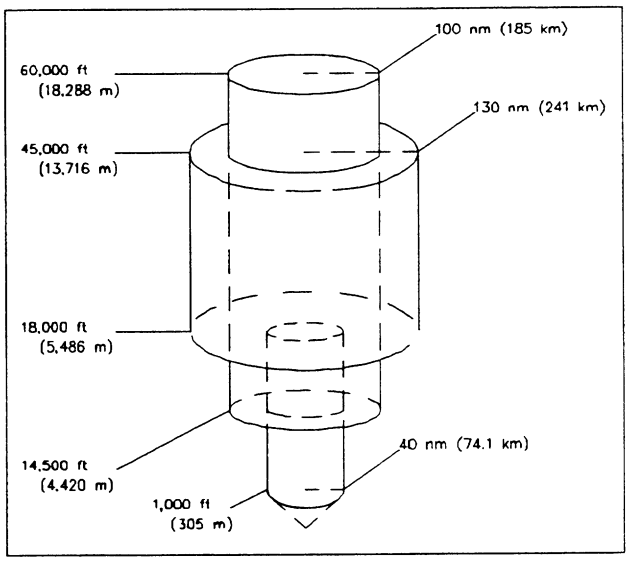

Figure 2-1. STANDARD CLASS L/H SERVICE VOLUME

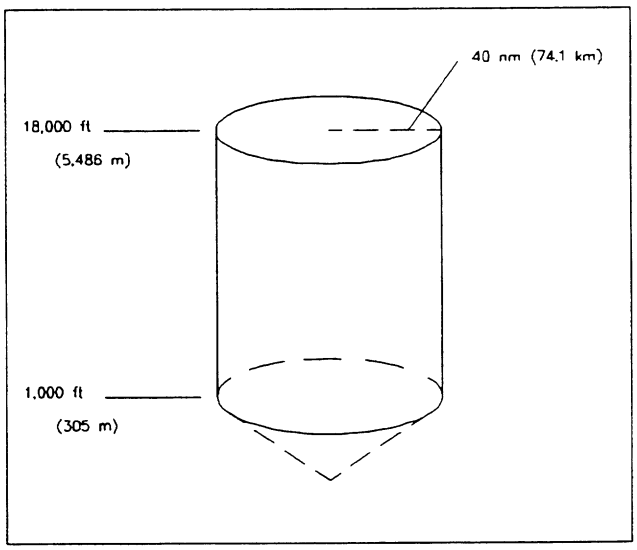

Figure 2-2. STANDARD LOW ALTITUDE SERVICE VOLUME

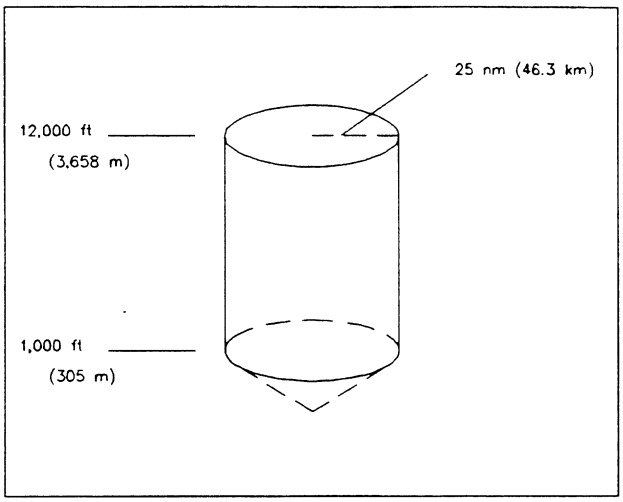

Figure 2-3. STANDARD TERMINAL SERVICE VOLUME

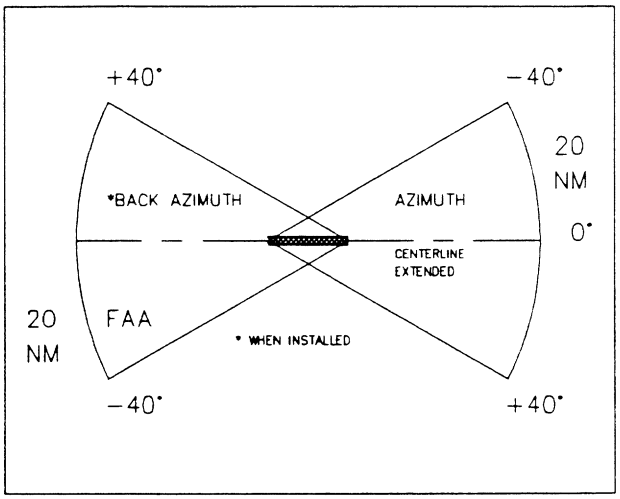

Figure 2-4. MLS AZIMUTH COVERAGE

b. NDB

Facility Class		Distance (Miles)
COMLO	NOTE: Low frequency	15
MH	beacons have no	25
H	standard height	50
HH	limitations.	75

c. ILS

Facility	Height Above Facility	Distance (Miles)
Localizer (FC)	4,500 and below	18
Localizer (BC)	4,500 and below	18
Glide Slope (2°-4°)	varies with angle	10

d. MLS

Facility	Height Above Facility	Distance (Miles)
MLS (FC)	20,000 and below	20
MLS (Back AZ)	5,000 and below	20
MLS EL	20,000 and below	20

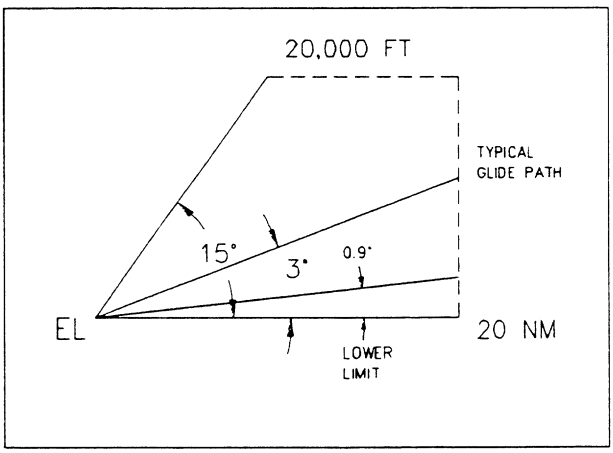

Figure 2-5. MLS ELEVATION COVERAGE

210. REQUESTS FOR EXPANDED SERVICE VOLUMES (ESV).

a. When ATC requires use of NAVAID's beyond limitations cited in paragraphs 209a through 209d, ATC submits an ESV request, with a description of the flight procedure requiring it. This request is first reviewed by the FMO. The FMO applies the criteria contained in Order 6050.32. If the FMO disapproves the request, it is returned to the originator without further action. FMO approved or restricted ESV's are then reviewed by AVN-100.

b. The National Flight Procedures Office is responsible for accuracy, clarity, and practicality of the data. If the ESV request is unclear, or if the FMO approved request has restrictions or restrictive comments, it may be necessary to coordinate changes with the FMO and/or the originating office. FAA flight inspection determines if the facility supports the procedure. The flight inspector may utilize facility files and approve the ESV based on supporting data, providing the data was taken within the last five years. If sufficient data are not available, accomplish a flight check of the procedure before AVN-100 approval.

c. A requirement for an ESV may be determined by the procedures specialist when developing an instrument procedure; e.g., the instrument procedure is proposed beyond SSV. In this case, the procedures specialist processes an FAA Form 6050-4 to obtain FMO and, in turn, flight inspection approval. An ESV request shall not be used as a substitute for proper instrument procedure design.

d. Facility rotation due to magnetic variation change should have no effect on coverage; however, radials used will change. AVN-100 initiates a revised FAA Form 6050-4 and explains the action in the REMARKS box of Part III; e.g., **"R-035 changed to R-038 due to variation change to 23E/85 effective 4 AUG 83."**

e. Describe holding patterns by an arc and two radials (e.g., **306-322°, 83 NM**) which enclose the holding pattern.

f. Preparation. Instructions for preparation of an ESV request are in paragraph 902. Figure 9-2 is a sample request.

g. Distribution. The FAA Form 6050-4 is supplied in 6-sheet sets. See paragraph 902e for specific distribution instructions.

h. AVN-100 Periodic Review. Review ESV's biennially.

211. UTILIZATION OF LOCALIZERS AS EN ROUTE AIDS.

The use of a localizer in en route flight procedures may be authorized in accordance with the following limitations:

a. The use of the localizer for course guidance shall start and end at an approved navigational fix.

b. The use of localizers for en route instrument flight procedures shall be limited to those instances where it is essential to air traffic control.

c. Appropriate navigational aids will be recommended at the earliest possible date in order to discontinue the use of the localizer for course guidance in the en route environment.

212. MONITORING OF NAVIGATION FACILITIES.

a. Monitors. It is FAA policy to provide a monitoring system for all electronic navigation facilities used in support of instrument flight procedures. Internal monitoring is provided at the facility, through the use of executive monitoring equipment which causes a facility shutdown when performance deteriorates below established tolerances. A remote status indicator may also be provided through the use of a signal sampling receiver, microwave link, or telephone circuit. VOR, VORTAC, and ILS facilities as well as new NDB's and marker beacons, installed by the FAA, are provided with an internal monitoring feature. Older FAA NDB's and some nonfederal NDB's do not have the internal feature and monitoring is accomplished by other means.

b. Monitoring Categories. Navigational facilities are classified in accordance with the manner in which they are monitored.

(1) Category 1. Internal monitoring plus a status indicator installed at control point. (Reverts to a temporary Category 3 status when the control point is unmanned.)

(2) Category 2. Internal monitoring with status indicator at control point inoperative, but pilot reports indicate facility is operating normally. (This is a temporary situation that requires no procedural action.)

(3) Category 3. Internal monitoring only. Status indicator is not installed at control point.

(4) Category 4. Internal monitor not installed. Remote status indicator provided at control point. This category is applicable only to nondirectional beacons.

213. UTILIZATION OF MONITORING CATEGORIES.

a. Category 1 facilities may be used for instrument flight procedures without limitation.

b. Category 2 is a temporary condition not considered in procedures development. ATC is responsible for issuing NOTAM's on these out of service facilities when pilot reports indicate facility malfunction.

c. Category 3 facilities may be used in accordance with the following limitations:

(1) Alternate minimums shall not be authorized if facility provides final approach course guidance; is required for procedure entry; is used to define the FAF; or is used to provide missed approach guidance. See also paragraph 812b.

(2) When a facility is used to designate a stepdown fix, alternate minimums shall be no lower than the circling minimums required without the stepdown fix.

(3) Consider denying or adjusting terminal routes that require reception of succeeding Category 3 facilities to avoid obstacles.

(4) Dogleg airways or routes shall not be predicated on these facilities.

(5) Navigational fixes developed from crossing radials of Category 3 facilities shall not be used to break a minimum en route altitude (MEA) to a higher MEA. (Can be used as a break to a lower MEA).

d. Category 4 facilities may be used in accordance with the following limitations:

(1) Alternate minimums may be authorized when the remote status indicator is located in an FAA ATC facility, and then only during periods the control point is attended.

(2) If the control point is other than an FAA facility, a written agreement shall exist whereby an ATC facility is notified of indicated changes in facility status.

NOTE: Failure of this Category 4 status indicator or closure of the control point will render the facility and the approach procedure unusable during the outage.

214. UTILIZATION OF 75 Mhz MARKERS.

75 Mhz markers may be utilized as the sole source of identification with the following limitations:

a. Missed Approach Point. Markers may be authorized as missed approach points for nonprecision approaches, provided a remote status indicator (RSI) is installed at an ATC facility.

b. Final Approach Fix. As a nonprecision final approach fix, the marker shall be monitored if alternate minimums are authorized. The marker need not have an RSI if collocated with a compass locator with a remote status indicator.

c. Course Reversals. Procedure turns and holding shall not be authorized from a 75 MHz marker.

d. Breaks in MEA's. Fan markers shall NOT be used to define the point where an en route climb to a higher altitude is required. (May be used as a break to a lower altitude.)

SECTION 5. IMPLEMENTING EPOCH YEAR MAGNETIC VARIATION (MV)

215. GENERAL.

This section establishes the MV program, identifies participating offices, assigns responsibilities, and provides guidelines for accomplishing the tasks necessary for implementing, maintaining, and systematically updating Epoch Year Magnetic Variation Values.

a. Background. The magnetic variation is determined by the National Oceanic and Atmospheric Administration (NOAA) for all areas of the United States and its territories for application to navigation charts and maps. Changing values for MV are tabulated and published on a 5-year epoch basis; e.g., 85, 90, 00, 05, etc. In order to assist in stabilizing the National Airspace System (NAS), a fixed value of MV is assigned to each navigational aid and airport as the magnetic Variation of Record. This value is applied to true directions to obtain the magnetic values for radials, courses, bearings, and headings published in instrument flight procedures. Periodic updating of the MV assigned to navigation facilities is required to maintain reasonable proximity of alignment with the earth's ever-changing magnetic field.

b. Participating Offices. Management and control of Epoch Year MV values require action by the following offices:

(1) **National Ocean Service (NOS)**

(2) **Aviation System Standards (AVN)**

(3) **National Flight Data Center (NFDC)**

(4) **Regional Airway Facilities Divisions**

(5) **Regional Airports Divisions**

(6) **Military Organizations**

216. RESPONSIBILITIES.

a. NOS.

(1) Publish isotonic lines or segments thereof on appropriate aeronautical charts based on current Epoch Year values.

(2) Revise en route aeronautical charts to reflect revised MV assignments to navigation facilities in accordance with information published in the National Flight Data Digest (NFDD).

b. AVN.

(1) **Function as the focal point** for all information relating to application of MV to the following elements of the NAS: navigational aids, airports, and instrument flight procedures; and for coordination and liaison between AVN and the Regional Airports, Air Traffic, and Airway Facilities Divisions with respect to matters pertaining to change in navigational aid or airport MV of Record and its effect on instrument flight procedures.

(2) **Function as the focal point** for facility flight inspection requirements and coordination. Terminal facilities (other than VOR, VOR/DME, TACAN, VORTAC, and radar systems) do not require flight inspection of MV changes.

(3) **Determine whether NOTAM** action is necessary when required procedural adjustment action or MV change is not accomplished by the effective date of amended instrument procedures or revised en route charts.

(4) **Assign and maintain MV's** of record for navigational facilities (including military facilities) and airports in whole degree increments. MV's of record are available in the AMIS facility data base. For new or relocated facilities, and for new or revised instrument procedures, apply the appropriate MV. Analyze each facility identified as a candidate for revised MV assignment to determine if facility rotation and/or redesignation of radials is required.

(5) **Develop and maintain** an official listing/record of navigational aids and airports by geographical location at the end of each Epoch Year to indicate the currently assigned MV of record, the

most recent Epoch Year's MV, and the projected MV for the next Epoch Year. For the purpose of planning and implementation, maintain a current listing of those candidate navigational aids and airports with a difference of 2° or more between the MV of record and the nearest future Epoch Year value.

(6) **Notify NFDC of changes** to assigned MV and the effective date of those changes for publication in the NFDD; notify other concerned offices having related responsibilities to ensure timely implementation of necessary actions. The effective date selected shall allow sufficient time for procedures processing in accordance with established schedules. MV changes which affect only terminal instrument procedures may have an effective date concurrent with publication of a specific procedural amendment.

(7) **Amend instrument flight procedures** as required, predicated on navigational aids or airports undergoing a change of MV of record. Conduct a thorough survey to determine the full impact the MV change will have on any instrument procedure. Such surveys shall include high and low altitude airways/jet routes, direct routes, air carrier off-airway routes, fixes in both high and low altitude structures, terminal routes and fixes, departure procedures (DP's), SID's, STAR's, and any other application to instrument flight procedures. Use the MV of record (or as officially changed) to develop instrument flight procedures - regardless of the MV shown on the chart being used.

(8) **VOR, VOR/DME, and VORTAC** facilities supporting the en route structure (which may or may not have instrument procedures predicated on them):

(a) Modify all fixes and IAP's. Modify all 14 CFR Part 95 Direct and Off-Airway (Non-Part 95) routes with documented radial(s) or bearing(s). Change ESV's. Make all modifications to meet an effective date that coincides with the en route change cycle.

NOTE: A listing of affected fixes, holding patterns, DP's, SID's, STAR's, military training routes, preferred routes, and ATS routes may be obtained from NFDC (ATA-110).

(b) Coordinate changes with ATC (ARTCC and approach control) in an attempt to eliminate routes, fixes, and instrument procedures that are no longer required.

(9) **Navigational aids** NOT supporting en route structure:

(a) Initiate implementation of the nearest future Epoch Year MV whenever any instrument procedure is established or amended. The nearest future Epoch Year MV will become effective concurrent with publication of the amendment (see paragraphs 816n and 816o).

(b) Amend and process multiple instrument procedures to simultaneously become effective concurrent with the instrument procedure specified in the MV change notification to NFDC.

(c) Submit revisions of all affected fixes with the instrument procedure(s). Change ESV's.

(d) Amend radar and DF procedures when airport MV of record is changed. If the DF is located at an off-airport site, obtain the MV for the antenna site; include MV and Epoch Year in the lower right corner of the FAA Form 8260-10. See chapter 4, section 5.

(10) **Military facilities.**

(a) Accomplish MV changes for U.S. Army facilities in the same manner as for civil facilities; however, obtain the installation commander's prior approval.

(b) Notify the appropriate military representatives when the need to change the MV of other military facilities is identified.

(11) **Airports.**

(a) Amend IAP's, SID's, and DP's which specify runway designator numbers affected by MV change.

(b) Notify the regional 530 office of the need for amendment action if STAR's contain runway designator numbers affected by MV change.

(c) Take appropriate NOTAM action if repainting of an affected runway is not accomplished on the required date.

c. **NFDC**. Upon notification by AVN of any change to MV of record, publish a notice of change in the NFDD to indicate the effective date of such change.

d. **Regional Airway Facilities Division**. Coordinate with AVN to obtain the MV of record for assignment to newly installed or relocated navigational aids.

e. **Regional Airports Division**. Coordinate with AVN-160 prior to establishing or revising runway designator numbers for an airport having one or more instrument approach or departure procedures, to determine the MV to be applied to the runway true bearing. Determination of the runway designator number should be a matter of joint agreement with AVN, and be accomplished sufficiently in advance to allow for procedural amendments.

f. **Military organizations.** Contact AVN-160 to obtain the MV of record to be applied to navigational aids or airports under military jurisdiction.

217. GUIDELINES. The identification and selection of navigational aids or airports as candidates for revision of MV of record require careful consideration and evaluation of a number of factors - as the impact of MV changes can be considerable. Air Traffic Division may have to initiate or revise published air traffic procedures; Airway Facilities is directly involved in facility rotations and requires proper coordination. The Airports Division may have to arrange for repainting of runway designator numbers.

NOTE: Airport standards require renumbering when the runway designator number is more than 6° from the magnetic alignment. This is usually accomplished during the next routine repainting, or when the existing markings are obliterated by seal coats, overlays, or reconstruction.

a. **MV versus Epoch Year Value**. When the difference between the MV of Record and the nearest future Epoch Year value of any navigational aid or airport is 3° or more, the MV of record shall be changed to the nearest future Epoch Year value. When the difference is less than 3°, AVN shall consider implementing the nearest future Epoch Year value when workload permits. Factors to consider include whether the navigational aid is isolated or in close proximity to one or more other facilities, whether on airport or away from an airport, and the impact on instrument flight procedures.

b. **Facilities on airports**. At airports with localizer(s) or more than one navigational aid, the MV at the airport reference point (ARP) shall be designated and assigned to all facilities at that airport, including all components of the ILS.

c. **MV versus OC Chart Value**. Where the assigned MV of record differs from the MV shown on the Obstruction Chart (OC), the assigned MV of record shall be used in the development of instrument flight procedures.

d. **Runway bearing** shall be assigned the same MV as the airport.

e. At **major airport** terminal areas, the ARP MV of record at the designated controlling airport may be used in determining the MV applied to all navigational aids serving the terminal areas.

218-219. RESERVED.

SECTION 6. NOTICES TO AIRMEN (NOTAM)

220. GENERAL.

NOTAM's provide timely knowledge to airmen, and other aviation interests, of information or conditions which are essential to safety of flight. NOTAM's pertaining to instrument procedures remain in effect until the pertinent charts and publications are amended or the condition requiring the NOTAM ends. This section deals primarily with procedures for issuing Flight Data Center (FDC) NOTAM's which are required to maintain the accuracy and currency of charted terminal and en route flight procedures.

221. NATIONAL NOTICE TO AIRMEN SYSTEM.

A National Notice to Airmen System has been established to provide airmen with the current status of the National Airspace System (NAS). Details for handling this information are contained in Order 7930.2, Notices to Airmen. The following is a brief summary of the services provided:

a. FDC NOTAM's pertaining to instrument flight procedures are issued through the National Flight Data Center (NFDC) and are primarily used to disseminate safety of flight information relating to regulatory material. They may also be used to provide wide dissemination for flight procedures data, aeronautical information, and other time-critical information. They are numbered by the U.S. NOTAM Office (USNOF) to reflect the year of issuance and the sequence number for the calendar year, (e.g., 8/0445). FDC NOTAM's are transmitted on all Service A circuits, and stored in the Consolidated NOTAM System, after which they are entered in the Notices to Airmen Publication (NTAP), also referred to as the "Class II (mail distribution) publication" until canceled.

b. D NOTAM's issued under the Flight Service Stations' Accountability System receive the same dissemination as the surface weather report for the originating station, and provide the user with current information on an hourly basis. They are numbered to reflect the month of issuance and the sequence number of the month, (e.g. 6/18).

222. FDC NOTAM TYPES.

Changes to instrument flight procedures, which have been charted and distributed, may be processed as FDC NOTAM's and issued through NFDC. Procedural minimums shall not be lowered by NOTAM unless fully justified as a safety of flight issue. In order to identify procedural amendments that can be charted from the NOTAM information, AVN-100 personnel shall prefix the text with an action code as follows:

a. FI/P (Flight Information/Permanent). This prefix shall be used when the amended procedure is expected to be effective for more than 4 charting cycles (224 days). FI/P NOTAM's (P NOTAM's) contain information that is complete for charting purposes. Cartographic agencies will initiate immediate changes to charted information, based upon the P NOTAM data, prior to receiving from NFDC the formal amendment to the appropriate procedure. Only one SIAP shall be addressed per P NOTAM. P NOTAM's may NOT be used for Airway, STAR, or DP changes.

FI/P NOTAM's may be used to amend procedures without a complete review of the procedure. The amendment will be indicated by an alphanumeric identifier; e.g., Amdt 3A, Amdt 4C, etc. A hard copy of each P NOTAM shall be affixed to the current amendment and maintained in the procedures file by both the NFDC and AVN-100, for each SIAP until the next full amendment is effective.

b. FI/T (Flight Information/Temporary). This prefix shall be used when the amended procedure will be effective for less than 4 charting cycles (224 days). If, at any time, it is determined that the condition is expected to last longer or will become permanent, AVN-100 shall immediately issue an amended FAA 8260 series form, incorporating the NOTAM material and any additional changes to the procedure prior to the expiration of the temporary timeframe.

223. FDC NOTAM PREPARATION, REVIEW AND TRANSMITTAL.

a. AVN-100 is responsible for formulating procedural and airway FDC NOTAM's and forwarding them for transmittal. The following procedures apply:

(1) **Coordinate all FDC NOTAM's** with the affected ARTCC facility and the appropriate regional offices at the time of submission, or if unable, during the next normal workday (See also Order 8260.3, paragraph 150). Normally, AVN-100 should also notify the airport manager at the affected location.

NOTE: The ARTCC will ensure that the NOTAM is forwarded to all affected ATC facilities under Order 7930.2F, paragraph 2-2-3.

(2) **AVN-160 quality assurance personnel shall review *all* NOTAM's** for accuracy, completeness, content, etc. prior to submission.

(3) **Submit NOTAM's to the NFDC** via facsimile (FAX). A typewritten or legible handwritten copy is required; however, a telephone call is acceptable in emergencies. Follow up the FAX with a telephone call to the responsible NFDC specialist to ensure receipt.

(4) **During periods when NFDC** is closed or receipt cannot be assured, FAX the NOTAM directly to the USNOF. The **NOTAM originator is responsible** for ensuring USNOF receipt.

(5) **Ensure that a copy of all FDC NOTAM's** sent directly to the USNOF is also sent to NFDC via FAX at the time of transmittal.

b. NFDC is responsible for reviewing applicable FDC NOTAM's for accuracy, format, completeness, and data base agreement prior to forwarding them to the USNOF for transmittal. Discrepancies noted by NFDC will be forwarded to AVN-160 for resolution. NFDC is also responsible for compiling NOTAM's for inclusion in the Notices to Airmen Publication (NTAP) and follow up actions noted in paragraph 227.

c. The USNOF is also responsible for ensuring that FDC NOTAM's are in the proper format under this directive and Order 7930.2. Questions/ discrepancies will be addressed to the submitting agency, NFDC, or AVN-160 as appropriate. FDC NOTAM's affecting FAA developed military SIAP's at civil locations shall be issued separately and forwarded to the USNOF military representative when requested by AVN-100.

d. Cartographic Standards Branch, ATA-130, is responsible for issuing, tracking, and canceling FDC NOTAM's used to correct/amend U.S. government IFR en route and VFR sectional aeronautical charts when necessary to resolve charting errors.

224. INSTRUMENT PROCEDURE NOTAM's.

a. A complete review and a new amendment are the preferred methodology for permanent procedure changes, particularly when applying new or revised TERPS criteria. However, it is recognized that this may not always be possible due to workload, staffing level, etc. P NOTAM's have proven to be an effective means of updating aeronautical charts within the following guidelines:

(1) **There is no age limit on a SIAP submitted for P NOTAM amendment** as long as AVN-100 reviews it and ascertains that there are no other safety of flight changes required to the procedure. Do NOT prepare a NOTAM solely to address minor non-safety related discrepancies to a SIAP; however, if a NOTAM is required for safety reasons, other items may be included in the P NOTAM to simultaneously update procedure charts.

(2) **AVN-100 may issue P NOTAM's for consecutive amendments** to the same procedure. All P NOTAM amendments shall be sequentially lettered (e.g., Amendment 13A, 13B, 13C, etc.) as a suffix to the current amendment.

(3) **Exercise caution in** adding P NOTAM's to a procedure or when initiating a P NOTAM when there is a current T NOTAM in effect for the procedure. In many cases close follow-up action, including canceling and re-issuing NOTAM's will be necessary to ensure there is no confusion for pilots and chart producers.

Examples:

The currently published SIAP is AMDT 3. There is a T NOTAM in effect for AMDT 3 that will remain in effect after AMDT 3A is charted. When AMDT 3A is charted, the T NOTAM must be canceled and re-issued for AMDT 3A.

The currently published SIAP is AMDT 4A. A P NOTAM has been issued, but not yet charted

promulgating AMDT 4B. Another P NOTAM is required that will promulgate AMDT 4C. In this case, because AMDT 4B is not yet charted, issue a T NOTAM against the currently charted procedure (AMDT 4A). When AMDT 4B is charted, cancel the T NOTAM and re-issue it as a P NOTAM promulgating AMDT 4C.

(4) Issue a T NOTAM and amend the SIAP as a priority to the AVN-100 work schedule, when all changes and corrections cannot be accommodated using a P NOTAM.

(5) When changes to civil procedures also affect FAA-developed military procedures at civil or joint-use airfields, AVN-100 shall issue a separate FDC NOTAM for the military procedure as specified in Orders 8260.15, United States Army Terminal Instrument Procedures Service, and 8260.32, United States Air Force Terminal Instrument Procedures Service. AVN-100 shall request the USNOF to forward the civil NOTAM and the reason to the cognizant military authority for appropriate military NOTAM action.

b. FDC NOTAM's are NOT required in the following cases:

(1) When a D NOTAM is issued closing an airport permanently, an FDC NOTAM need not be issued denying use of a SIAP. A routine procedure cancellation should be processed.

(2) When a D NOTAM is issued to shut down a facility permanently, only routine cancellation of procedures predicated on that facility are required. FDC NOTAM's may be required for other procedures supported by the affected facility.

(3) When a D NOTAM is issued closing a runway, an FDC NOTAM need not be issued denying straight-in minimums to that runway. If the closing is permanent, routine procedure cancellations, including takeoff/departure procedures, shall be processed.

(4) When a D NOTAM is issued for a facility shutdown or outage, an FDC NOTAM denying SIAP use is not required for those SIAP's using only that facility. However, other SIAP's in the vicinity must be reviewed to determine if that facility supports courses or fixes; in such cases, those SIAP's require an FDC NOTAM. Particular attention must be given to fixes supporting stepdown minimums and missed approach procedures which are predicated on the out-of-service facility. It is not necessary to issue NOTAM's for fixes and terminal route segments which are related to unusable airway segments from the subject facility. Do not issue "Radar Required" NOTAM's on unusable or restricted airway segments (see also paragraph 463).

(5) When a D NOTAM removes a localizer from service, the SIAP is unusable. If the GS is out, the precision approach is unusable. If other ILS components are out, the inoperative table applies.

(6) When radio control of approach lights or runway lights is commissioned or the frequency is changed, Flight Inspection issues a D NOTAM in accordance with Order 8200.1, United States Standard Flight Inspection Manual.

(7) Changes to DP's (SID's) and/or STAR's, which require NOTAM publication, shall be sent by the ARTCC to the USNOF for issuance as a D NOTAM. The ARTCC shall ensure follow-up DP (SID) action with AVN-100 immediately.

225. AIRWAY NOTAM's.

When a restriction or a change to an airway requires a NOTAM, forward an FDC T NOTAM to NFDC following the procedures in paragraph 223. NOTAM's reflecting airway changes within one or more ARTCC's airspace are issued under the affected ARTCC identifier as Center Area NOTAM (CAN) FDC NOTAM's on the NOTAM circuit.

a. Airway changes involving a single state and one or more ARTCC's shall be issued with the ARTCC identifier **followed by the two-letter state code**. The two-letter state code must also follow all NAVAID and fix designators.

Example:

"FDC 8/0001 ZFW OK FI/T AIRWAY ZFW ZKC. V140 SAYRE (SYO) VORTAC, OK TO TULSA (TUL) VORTAC, OK MEA 4300.

FDC 8/0002 ZKC OK FI/T AIRWAY ZFW ZKC. V140 SAYRE (SYO) VORTAC, OK TO TULSA (TUL) VORTAC, OK MEA 4300.

REASON: TEMPORARY NEW TOWER. OE 98-ASW-0123."

b. If the airway NOTAM affects one but less than four ARTCC's and multiple states, issue one NOTAM for each affected ARTCC. If the NOTAM affects four or more ARTCC's, send one NOTAM using FDC as the facility identifier.

c. If the restriction will exceed the time limit established in paragraph 222b, forward an updated FAA Form 8260-16 and/or 8260-2 simultaneously to NFDC for charting.

Examples:

One ARTCC:

"FDC 8/0011 ZBW CT FI/T AIRWAY ZBW. V1 HARTFORD (HFD) VORTAC, CT TO MADISON (MAD) VOR/DME, CT MEA 3000.

REASON: TEMPORARY NEW TOWER. OE 98-ANE-1329."

Two ARTCC's:

"FDC 8/0011 ZBW FI/T AIRWAY ZBW ZNY. V1 HARTFORD (HFD) VORTAC, CT TO DIXIE INT, NJ MEA 3000.

FDC 8/0012 ZNY FI/T AIRWAY ZBW ZNY. V1 HARTFORD (HFD) VORTAC, CT TO DIXIE INT, NJ MEA 3000.

REASON: TEMPORARY NEW TOWER. OE 98-ANE-1329."

Three ARTCC's:

"FDC 8/0011 ZBW FI/T AIRWAY ZBW ZNY ZDC. V1 HARTFORD (HFD) VORTAC, CT TO WATERLOO (ATR) VORTAC, DE MEA 3000.

FDC 8/0012 ZNY FI/T AIRWAY ZBW ZNY ZDC. V1 HARTFORD (HFD) VORTAC, CT TO WATERLOO (ATR) VORTAC, DE MEA 3000.

FDC 8/0013 ZDC FI/T AIRWAY ZBW ZNY ZDC. V1 HARTFORD (HFD) VORTAC, CT TO WATERLOO (ATR) VORTAC, DE MEA 3000.

REASON: TEMPORARY NEW TOWER. OE 98-ANE-1329."

Four or more ARTCC's:

"FDC 8/0001 FDC FI/T AIRWAY ZNY ZDC ZAT ZJX. V1 DIXIE INT, NJ TO CRAIG (CRG) VORTAC, FL MEA 4000.

REASON: TEMPORARY NEW TOWER. OE 98-ANE-1329."

226. NOTAM CONTENT.

a. FDC NOTAM's shall identify the procedure being amended and the current amendment number. The NOTAM shall be as concise as possible, and shall NOT contain information that could be published at a later date by a routine amendment. For example, changes to the touchdown zone or airport elevation, which do not affect visibility minimums, do not require NOTAM action.

b. The text shall be prepared by AVN-100 using plain language and those contractions found in the NTAP. Specialists must keep in mind that the NOTAM is directed to the pilot, and should be worded so that the intended change will not be misinterpreted. Avoid the use of internal cartographic instructions which have no meaning to pilots. Spell out NAVAID names in clear text followed by the identifier. If it appears that the NOTAM length will exceed 20 lines, refer to FAA Order 7930.2, paragraph 4-3-4.

c. For temporary obstructions, include the type, elevation, distance, and direction from the airport or runway threshold, as appropriate, as the last line of the text.

d. If the NOTAM contains permanent information for charting, the last line of the NOTAM text shall identify it as the next sequential alphanumeric amendment; i.e., ORIG A, AMDT 4B, etc. The date of the NOTAM will become the effective date of that amendment.

e. Include a reason for the NOTAM following the NOTAM text. This information will not be transmitted as a part of the NOTAM text, but will inform the NFDC and the USNOF of the basis for

the NOTAM. It will also ensure the data is retained in the NOTAM historical files.

Examples:

"FDC 8/____ ELP FI/P EL PASO INTL ARPT, EL PASO, TX.
ILS RWY 22 AMDT 10...
GS 3.0 DEGREES, TCH 51, GS ALT AT LOM 5155, GS ALT AT MM 4159.
THIS IS ILS RWY 22 AMDT 10A.

REASON: 8240.47 EVALUATION OF RELOCATED GLIDE SLOPE."

"FDC 8/____ ORD FI/T CHICAGO O'HARE INTL, CHICAGO, IL.
VOR RWY 22R AMDT 8B...
MDA 1400/HAT 750, VIS 1-1/2 ALL CATS.
TEMPORARY CRANE 1100 MSL 1.2NM SE OF RWY 23. (Specify distances less than 1 NM in feet.)

REASON: TEMPORARY CRANE FOR 90 DAYS. OE 98-AGL-1689."

"FDC 8/____GPT FI/T GULFPORT-BILOXI REGIONAL, GULFPORT, MS.
VOR RWY 31 AMDT 18...
S-31 MDA 720/HAT 693 ALL CATS. VIS CAT C 2, CAT D 2-1/2. CIRCLING MDA 720/HAA 692 ALL CATS. VIS CAT C 2, CAT D 2-1/2.

RADAR 1 AMDT 3
VOR/DME OR TACAN RWY 31 ORIG...
S-31 MDA 660/HAT 633 ALL CATS. VIS CAT C 1-3/4, CAT D 2, CAT E 2-1/4. CIRCLING CATS A/B MDA 660/HAA 632.

TEMPORARY CRANE 410 MSL 1.5 NM SE OF RWY 31.

REASON: TEMPORARY CRANE FOR 160 DAYS. OE 98-ACE-1453."

"FDC 8/____ LAN FI/T CAPITAL CITY, LANSING, MI.
ILS RWY 10R AMDT 8A...
ILS RWY 28L AMDT 24...
VOR RWY 6 AMDT 23B...
VOR RWY 24 AMDT 7E...
RADAR-1 AMDT 13...
CIRCLING MDA 1420/HAA 559 ALL CATS.

REASON: NEW BUILDING, 1115 MSL. OE 98-AGL-2974."

NOTE: Since the above condition is permanent, SIAP Amendments must be processed within 224 days. However, in lieu of the above single T NOTAM, a *P NOTAM could be issued for each SIAP.*

"FDC 8/____ HPT FI/P HAMPTON MUNI, HAMPTON, IA.
VOR/DME RWY 35 ORIGA...
MSA FROM MASON CITY VORTAC 3000.
DELETE: ACTIVATE MIRL RWY 17-35, CTAF.
THIS IS VOR/DME RWY 35 ORIG B.

REASON: NEW TOWER, 2049 MSL, OE 97-ACE-2286. LIGHT NOTE REDUNDANT TO CHARTING.
THIS CANCELS FDC 1/2345."

"FDC 8/____ AXH FI/P HOUSTON-SOUTHWEST, HOUSTON, TX.
NDB RWY 28 AMDT 4...
CHANGE ALL REFERENCE TO RWY 10-28 TO RWY 9-27.
THIS IS NDB RWY 27 AMDT 4A.

REASON: RUNWAYS RENUMBERED FOR MAGNETIC VARIATION CHANGE."

"FDC 8/____ AXH FI/P HOUSTON-SOUTHWEST, HOUSTON, TX.
LOC/DME RWY 10 AMDT 2A...
CHANGE ALL REFERENCE TO RWY 10-28 TO RWY 9-27.
THIS IS LOC/DME RWY 9 AMDT 2B.

REASON: RUNWAYS RENUMBERED FOR MAGNETIC VARIATION CHANGE."

227. NOTAM FOLLOW-UP ACTION.

Once a P NOTAM has been issued, the NFDC will track the procedure change until charted. A copy of all P NOTAM's shall be stapled to the current 8260 series form, in the procedures file for each SIAP. The NOTAM's will be promulgated to charting agencies in the bi-weekly Transmittal Letter of changes for Federal Register publication. NFDC shall review amended SIAP charts, ensure the procedural change has been charted correctly, and

cancel the NOTAM on the amended procedure effective date.

228. NOTAM RESPONSIBILITY.

NOTAM follow-up services, provided by NFDC, are designed to expedite the publication of procedures amended by emergency action and to assist field personnel in the management of NOTAM issuances. Assistance in NOTAM handling by NFDC personnel in no way changes basic responsibilities for determining the need for NOTAM issuance, NOTAM content, or for the required follow-up actions. These responsibilities remain within AVN, and emergency type actions described above are not to be used as a substitute for accurate and timely program planning.

229. RESERVED.

SECTION 7. QUALITY/STANDARDIZATION OF INSTRUMENT FLIGHT PROCEDURES

230. AVN-100 ACTION.

a. AVN-100 is responsible for the accuracy of procedures it develops, and for establishing and conducting a system of quality control which ensures that such procedures conform to applicable criteria, standards, and policy.

b. AVN-100's system of quality control shall ensure that all flight procedures and NOTAM's submitted to NFDC for publication are of a professional quality that will not require corrections or changes following release.

c. When unusual circumstances exist, for which policy is not clear or is nonexistent, request a policy determination from AFS-420 PRIOR TO submission for publication. AFS-420 will issue appropriate instructions as necessary.

d. Instrument charts produced by National Ocean Service will be reviewed by AVN-100, upon receipt, for variations from information submitted for publication and for clarity of the graphic portrayal. Charting errors detected shall be forwarded directly to NFDC for corrective action. Charts which do not clearly portray the procedures should be referred to AFS-420, with recommendations for charting improvements.

231. AFS-420 ACTION.

a. AFS-420 monitors procedures and FI/T or FI/P NOTAM's on a random surveillance basis and only relative to policy compliance.

b. Preliminary reviews may be conducted by AFS-420 upon request by the AVN-100. When unusual circumstances exist, AFS-420 will issue appropriate instructions to AVN-100 as necessary.

232-239. RESERVED.

SECTION 8. PERIODIC REVIEW OF INSTRUMENT PROCEDURES

240. GENERAL.

a. This section prescribes the minimum frequency of review of instrument procedures. When deemed necessary, and in the interest of safety or for other proper justification, make more frequent reviews. Review **all** instrument procedures to **ensure** that requirements for obstacle clearance, navigational guidance, safety, and practicality are met. **Immediately** comply with changes to criteria which relate to safety of flight. Use the review to ensure compliance with all other changes to criteria. FPO's can normally present current reviews of OE's, F&E and AIP projects pertinent to the review process.

b. A review is considered complete if it occurs in the period from one month prior to one month after the month in which the review is due; e.g., if the review is due in July, the window is June 1 to August 31. If the window is met, the procedure review due month remains unchanged. However, if the review occurs outside of the specified window, the next review is due in the month in which the review was actually completed.

c. When facility restrictions are established or changed, review all **associated flight procedures.** Take particular care to evaluate unpublished procedures such as off-airway, direct, and substitute routes.

241. AVN-100 ACTION.

a. SIAP's, SID's, DP's. and STAR's:

(1) **Review** at least once every two years.

(2) **Review** all feeder, initial, intermediate, final, circling, missed approach, and departure procedure areas for any changes that would affect flight altitudes. To avoid proliferation of conflicting data on SIAP's at an airport, the periodic review should include all procedures at that airport. See paragraph 837a.

(3) **Ensure** that all procedures are contained within controlled airspace. Initiate airspace action as required.

(4) **Ensure** that minimums meet criteria. Review SIAP forms for conformance to current standards. Check published SIAP's for correct portrayal.

(5) **Verify** current magnetic variation values.

(6) **Verify** continued need for SIAP's based on usage rate, economic need, etc. Cancel SIAP's that are no longer required.

(7) **Verify** the validity of existing waivers. Cancel waivers no longer required.

b. Airways, Airway Segments, and Routes:

(1) **Review** at least once every four years.

(2) **Verify** controlling obstacles and assure that authorized altitudes meet obstacle clearance requirements. Use current en route charts as airway checklists.

(3) **Verify** continued need for off-airway and FAR Part 95 direct routes. Cancel routes that are no longer required.

c. Fixes:

(1) **Review** all fixes in conjunction with the associated SIAP's, airways, or routes (see section 10). Assure that FAA Form 8260-2 entries for facility type, class, monitoring category, radial/course/bearing, distances, least divergence angle, and charting requirements are correct. Verify holding requirements and controlling obstructions.

(2) **Cancel** fixes and holding which are no longer needed.

d. All Procedures:

(1) **Establish and maintain** a system of control to assure that reviews are accomplished.

(2) **Take remedial action** by NOTAM or revised FAA 8260-series form.

(3) Review all associated waivers in conjunction with any procedure review.

(4) Annotate and incorporate editorial changes noted during the review in the next revision. Do NOT make SIAP amendments solely to correct an MSA altitude except when the MSA provides less than 950 feet of obstacle clearance.

242-249. RESERVED.

SECTION 9. COMMUNICATIONS AND WEATHER

250. COMMUNICATIONS REQUIREMENTS.

FAA Order 8200.1, U.S. Standard Flight Inspection Manual, section 211, defines communication tolerances and flight inspection procedures. Even though gaps in navigation course guidance may be approved, reliable communications coverage over the entire airway or route segment at minimum en route IFR altitudes shall be available.

a. MEA's or MAA's are predicated upon continuous approved communications capability for the entire designated segment. All available resources must be explored before restricting the use of altitudes of an airway or route due to a lack of acceptable communications coverage. Coordination must be effected with ATC for determination of the acceptability of communications coverage in a particular area.

b. Mandatory communications with the appropriate ARTCC are not required; communications with other ATC facilities are allowable. Where necessary, in order to provide direct communications with a center, appropriate recommendations for a peripheral site should be made.

c. Communications requirements for non-14 CFR Part 95 routes certified for a particular air carrier are the responsibility of appropriate Flight Standards District Office (FSDO) operations inspector.

251. USE OF UNICOM.

UNICOM may be used to satisfy the communications requirements of Order 8260.3, paragraph 122e; however, there are limitations on its use that must be considered. According to FCC Rules and Regulations, Part 87, Subpart C, UNICOM stations are not authorized for ATC purposes other than the relay of the following information between the pilot and controller:

a. Revision of proposed departure time.

b. Time of takeoff, arrival, or flight plan cancellation.

c. ATC clearances, PROVIDED a letter of agreement is consummated by the licensee of the advisory station (UNICOM) with the FAA.

d. Weather information - only if there is no FAA control tower or Flight Service Station, or during periods when an FAA unit is not in operation. Direct transmission of approved altimeter setting to the pilot is authorized provided the procedure states an alternate course of action if UNICOM is not contacted.

NOTE: FCC regulation places the responsibility for the letter of agreement on the licensee, but FAA Handbook 7210.3 suggests that an ATC facility prepare the agreement. A communication capability between the UNICOM station and ATC is necessary to meet requirements of Order 8260.3, paragraph 122e.

252. AUTOMATIC ALTIMETER SETTING AND WEATHER REPORTING SYSTEMS.

Approved devices for automatically reporting altimeter settings and weather may be used to satisfy the requirements of Order 8260.3, paragraph 122d. Special notes will be required on the approach charts. Examples of standard notes can be found in paragraph 814f.

253-259. RESERVED.

SECTION 10. NAVIGATIONAL FIXES

260. GENERAL.

Criteria for navigational fixes are contained in chapters 2 and 17 of Order 8260.3. When using a VORTAC, fixes should be defined by DME from the facility providing course guidance in addition to radials or course intersections.

261. REPORTING POINTS.

Reporting points are established for use by ATC in the movement and separation of aircraft. Reporting points are divided into two categories, which are:

a. Compulsory reporting points are designated by regulation and, therefore, require rule making action. It is ATC's responsibility to initiate airspace rule making action for the designation of compulsory reporting points. Unless the reporting point can be identified at the lowest operational altitude, it shall not be designated a compulsory reporting point.

b. Non-Compulsory reporting points may be established by ATC without the requirement for rule making action.

262. UNPLANNED HOLDING AT DESIGNATED REPORTING POINTS.

a. Where required for aircraft separation, ATC may request aircraft to hold at any designated reporting point in a standard holding pattern at the MEA or the minimum reception altitude (MRA), whichever altitude is the higher, at locations where a minimum holding altitude has not been requested. For this reason, the conditions to be considered for holding (obstacle clearance, communications, and facility performance) must be reviewed whenever reporting points are established or revised, even though specific holding authorization has not been requested by ATC facility.

b. Unplanned holding at en route fixes may be expected on airway or route radials, bearings, or courses. If the fix is a facility, unplanned holding could be on any radial or bearing. Where standard holding cannot be accomplished at the MEA or MRA, any necessary limitations must be clearly indicated on FAA Form 8260-2, Radio Fix and Holding Data Record.

263. REQUESTS FOR NAVIGATIONAL FIXES.

FAA Form 8260-2 shall be used as the vehicle to transmit the ATC requests for the establishment, revision, or cancellation of navigational fixes, holding patterns, and/or reporting points. All requests from ATC facilities, civil and military, are forwarded through the appropriate ARTCC to AVN-100. AVN-100 may initiate FAA Form 8260-2 for those navigational fixes which are required for the development of SIAP's. Other operationally required navigational fixes shall be coordinated with the appropriate ATC facility.

264. NAMING NAVIGATIONAL FIXES.

a. Name all intersections, DME/ATD fixes (except final segment stepdown fixes), and RNAV waypoints. Each name consists of a 5-letter pronounceable word for use as a computer code in the NAS. Obtain 5-letter names from NFDC. Name fixes collocated with a facility (named in accordance with chapter 3 of Handbook 7400.2) the same as the facility.

b. Coordinate with NFDC and the appropriate ARTCC when a fix name change is required. Document the change on FAA Form 8260-2.

265. DOCUMENTING NAVIGATIONAL FIXES.

a. All named civil and military fixes shall be documented and approved on FAA Form 8260-2. Chapter 9 of this order contains instructions for entering data and submitting FAA Form 8260-2.

b. Military fixes are also maintained in the National Data Base and are used to support the air traffic system. Therefore, the requirement to document and flight inspect military fixes must receive the same priority as the fixes that support civil procedures.

266. CORRELATION OF NAVIGATIONAL FIXES AND CHANGEOVER POINTS (COPS).

The designation of navigational fixes should be directly related to COP's. Care should be taken to avoid designating navigational fixes which require the use of a facility beyond the COP. Figure 2-6 is an example of the proper and the improper method of designating a navigational fix in relation to COP's.

NOTE. These diagrams illustrate a problem encountered when handling intersections and changeovers. Make certain the entire complex is reviewed to prevent establishing procedures which are in conflict with the usability of the facilities involved.

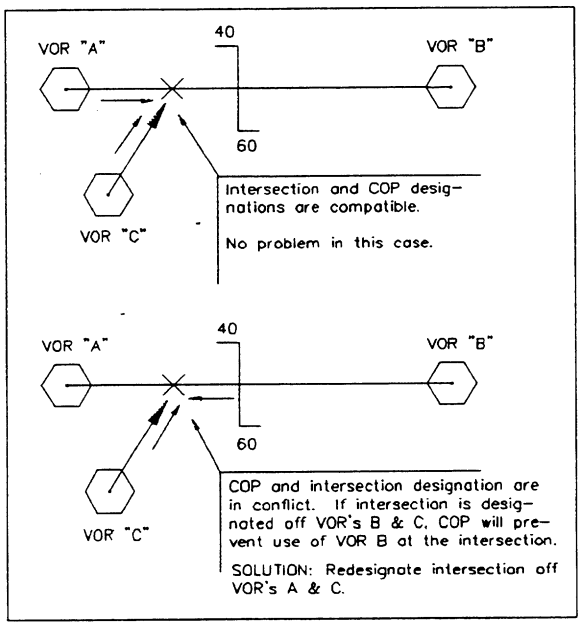

Figure 2-6. PROPER AND IMPROPER METHOD OF DESIGNATING A NAVIGATIONAL FIX

267. MINIMUM RECEPTION ALTITUDES (MRA).

At certain navigational fixes, VOR reception from an off-course facility may not be adequate at the lowest MEA associated with the route segment. In such cases when the MRA at the fix is higher than the MEA for instrument flight, the MRA shall be established for the fix and indicated on FAA forms 8260-2 and 8260-16. Once established, an MRA will not be revised unless the reception altitude is changed by 200 feet or more. See paragraph 905d(2)(e).

268. FLIGHT INSPECTION.

After completion of required coordination, flight inspection personnel shall confirm facility performance at the proposed operational altitudes. Where possible, determinations shall be predicated on current facility performance records; otherwise, a flight check shall be accomplished.

269. MAXIMUM AUTHORIZED ALTITUDES (MAA).

MAA's are procedural limits which might be determined by technical limitations or such other factors as limited airspace or compatibility with other procedures. Where MAA's are required in connection with the publication of flight procedures, they are included on FAA Forms 8260-2 and 8260-16, or worksheets used to process the data. See also paragraph 905d(2)(e).

SECTION 11. OBSTACLE DATA ACCURACY

270. GENERAL.

The primary purpose of obstacle evaluation is to determine how an object will impact instrument flight procedures. The evaluations can provide accurate, consistent, and meaningful results and determinations only if AVN-100 procedures specialists apply the same rules, criteria, and processes during development, review, and revision phases. This section establishes the minimum accuracy standards for obstacle data and its application in the development, review or revision of instrument procedures, and provides information on the application of the minimum accuracy standards. The minimum standards are to be applied by AVN-100 specialists in all instrument procedures obstacle evaluations.

271. OBSTACLE DATA ACCURACY STANDARDS FOR INSTRUMENT PROCEDURES.

This paragraph identifies the MINIMUM requirement for accuracy of obstacle data used in the development of instrument procedures, and provides minimum accuracy standards for each instrument procedure segment.

a. Concept. Obstacle data accuracy is not absolute, and the accuracy depends on the data source. The magnitude of the error does not preclude the use of these data, provided it is identified and accounted for. In some cases, upgrading obstacle accuracy can provide relief from operational restrictions in an instrument procedure. This will allow expenditure of funds for obstacle surveys in areas where benefit to the aviation community would result. In no case, however, will the application of obstacle data accuracy preempt the requirement for the flight check of an instrument procedure for discrepancies. For sources of obstacle data accuracy, see appendix 2.

b. Standards. The minimum accuracy standards in this order are for use in the development, review, and revision of instrument procedures. They shall be applied to all new procedures and to existing procedures at the next revision or periodic review, whichever occurs first. The minimum accuracy standards are listed in paragraphs 271b(1) through (5). ADJUST the location/elevation data of the segment controlling obstacle by the amount indicated by the assigned accuracy code ONLY if that assigned code does not meet or exceed the following standards. For example, if the nonprecision final segment controlling obstacle has an assigned accuracy code 4D, adjust its location data by +250' laterally, and its elevation data by +50' vertically; this is because 4D does not meet or exceed the minimum accuracy requirement of +50' horizontal and +20' vertical (2C) applicable to the nonprecision final segment.

(1) +20' horizontal and +3' vertical accuracy. Precision final segment.

(2) +50' horizontal and +20' vertical accuracy. Nonprecision final segment; missed approach 40:1 surface evaluation; circling areas. For departures and SID's: Zone 1/Section 1 and first 2 NM of departure route.

(3) +250' horizontal and +50' vertical accuracy. Intermediate segment. For departures and SID's: Zones 2 and 3; Section 2; and beyond first 2 NM of departure route.

(4) +500' horizontal and +125' vertical accuracy; (1000' ROC and Special ROC); (non-mountainous). Initial segments; feeder segments; en route areas; missed approach holding/level surface evaluation; MSA; ESA; MVA; EOVM; MIA; DF Vector Areas. For SID's: level route portion.

(5) +1000' horizontal and +250' vertical accuracy; (2000' ROC) (mountainous). Feeder segments; en route areas; ESA's, DF Vector areas. For SID's: level route portion.

(6) In all cases, if it is determined that the horizontal and/or vertical uncertainty adjustment associated with the controlling obstacle must be applied, **application shall be in the most critical direction;** e.g., applied in the horizontal and/or vertical direction which most adversely affects the procedure.

(7) If the controlling obstacle elevation plus accuracy code adjustments **affects a minimum**

altitude or gradient, and a higher order of accuracy could reduce an adverse operational effect, then take action to have the accuracy improved; or adjust the procedure accordingly (see paragraph 272).

(8) **Take no further action** if the controlling obstacle elevation plus accuracy code adjustment does not affect a SIAP minimum altitude or gradient.

(9) **AVN-100,** in coordination with Air Traffic, shall determine the accuracy standard to apply in the evaluation of a proposed obstruction, and to apply in the development/revision of any affected procedures.

c. IAPA Data Base. The IAPA obstruction database file contains obstacle location and elevation data as provided to AVN by the NOS. The data contains both verified and unverified obstacles. Discrepancies in the IAPA obstacle database found in the development, review, and revision of instrument procedures shall be identified to AVN-22A.

272. APPLICATION.

Adjust the instrument procedure to meet the requirements of the minimum accuracy standards. When an altitude adjustment is required which would adversely affect the procedure minimums, evaluate the nature, magnitude, and rationale for the adjustment; then review records to identify an existing source validating a higher level of accuracy which could preclude the need for adjustment. Where the review fails to produce an improved accuracy source, notify the appropriate Airports Division for assistance relative to existing obstructions; or notify the appropriate Air Traffic Division when the review involves a proposed structure or modification to an existing structure being studied in the Obstruction valuation (OE) program. AVN-100 need not delay further processing of affected procedures pending receipt of higher level accuracy data ONLY where operationally prudent.

a. Manual. When manually developing the procedure, identify all controlling obstacles on FAA Form 8260-9 in coordinates to the second, and assign the highest order of accuracy known for the data source (see paragraph 909).

b. IAPA. When using IAPA to develop the procedure, apply the accuracy standards as follows:

(1) **Obstacle accuracy standards** shall be applied when determining the altitude(s) to be charted.

(2) **If segment altitude adjustments are made** to meet the requirements of the minimum accuracy standards, state the reason for the adjustment on the applicable menu.

c. Evaluation Sequence. In either paragraphs 272a or b, first determine the controlling obstacle using raw obstacle data. Then add horizontal/ vertical accuracy code adjustments to the raw values to determine the obstacle's most adverse location and elevation. Accuracy code adjustment is not applied to obstacles evaluated relative to Order 8260.3, paragraphs 289 or 332.

d. "Controlling Obstacle" has the following definitions for the purpose of application and documentation:

(1) For precision SIAP final segments, that obstacle which, having penetrated the obstacle clearance or transitional surface, requires the highest glide slope above 3° and/or causes the most adverse decision altitude (DA) adjustment. Where there are multiple penetrations, first determine the required DA adjustment for each obstacle using raw obstacle data. Then, having determined the controlling obstacle, recalculate the required DA adjustment using accuracy code adjusted data.

(2) **For nonprecision** final segments, intermediate, initials, holding, feeders, etc., the obstacle in the primary area (or secondary area equivalent) which has the highest elevation.

(3) **For barometric VNAV final segments,** that obstacle which causes the most adverse DA or requires the highest vertical path angle (VPA) above 3°.

(4) **For missed approach** segments, that obstacle which, having penetrated a missed approach obstacle clearance surface, causes one of the following:

(a) Highest **DA/MDA**;

(b) Most adverse **MAP relocation**;

(c) Highest **climb gradient** for ILS CAT's II or III (or any other procedure with waiver).

(5) For missed approach level surface, that obstacle in the primary (or secondary equivalent) which has the highest elevation.

(6) For DP's/SID's, that obstacle which, having penetrated the 40:1 Obstacle Identification Surface (OIS), causes the most adverse climb gradient and/or ceiling and visibility to be published.

273-279. RESERVED.

SECTION 12. WAIVER OF STANDARDS

280. GENERAL.

Submit a request for a waiver of flight procedures standards on an approved computer generated FAA Form 8260-1, Flight Procedures Standards Waiver (see paragraph 903). Each waiver request will be considered ONLY when there is no other suitable way to resolve a procedural problem, or to provide a required service. The waiver is used to officially document the nonstandard application of criteria, and serves as a means to identify criteria that may require further refinement or to identify problem areas.

281. WAIVER PROCESSING.

Request waivers by completing the front of FAA Form 8260-1. Detailed instructions for completing the form are contained in chapter 9, section 3. Figure 9-1 provides an easy reference for waiver form processing and routing requirements.

a. Forward the original FAA Form 8260-1 and supporting data for approval to AFS-400 through AFS-420. For U.S. Army procedures, forward waiver requests for approval to the U.S. Army Aeronautical Services Agency (USAASA) or U.S. Army Aeronautical Services Detachment, Europe. Use the specially adapted automation version of the FAA Form 8260-1 for U.S. Army waiver processing.

b. Complete documentation and supporting data (including flight inspection reports) must accompany the waiver request so reviewing offices can conduct an evaluation without additional research. Submit appropriate 8260-series forms with each request. Include large scale charts depicting the procedure and/or obstacles which are the subject of the waiver.

c. Enter only one waiver request on the waiver form.

d. When a procedure is amended, reprocessing of an existing waiver is not necessary unless the reason for the amendment directly impacts the basis for the waiver.

e. When a waiver is proposed for obstacle penetration of ILS final or straight missed approach surfaces, request a Collision Risk Model (CRM) study through AFS-420. Refer to Order VN 8260.4, ILS Obstacle Risk Analysis. At the time of the request, provide all data required for conducting the study. AFS-420 then analyzes and interprets the result of the CRM and provides the results to AVN-100.

f. The Flight Procedure Standards Branch, AFS-420, reviews all waiver requests, and develops and forwards the proposed Flight Standards endorsement to AFS-400 for final action.

g. AVN is responsible for ensuring that an approved waiver of standards is on file for each instrument procedure requiring waiver action. AFS waiver approval shall be obtained before submitting the procedure to NFDC for publication.

282. WAIVERS FOR SPECIAL INSTRUMENT APPROACH PROCEDURES.

Except for proponent developed procedures, when a waiver is approved for a special instrument approach procedure, AVN shall coordinate with the appropriate FSDO concerning any special conditions that may be imposed on the use of a special authorization. This action is necessary to establish required supervision to ensure user compliance with equivalent level of safety provisions. For example, special aircrew training may be required as an equivalent level of safety.

283. PERIODIC REVIEW OF WAIVERS.

AVN shall review approved waivers biennially to determine whether the waivers are still required. Cancel unnecessary waivers.

284. CANCELLATION OF WAIVERS.

a. Cancellation of waivers shall include a reason in the comments block. Such termination may be directed by AFS-400. AVN is responsible

for planning ways to eliminate waivers through the modification, addition, or relocation of navigation facilities.

b. Distribution of a canceled waiver shall be made to the same organizations that received the approved waiver (see paragraph 903).

285-289. RESERVED.

SECTION 13. IAPA PROCEDURES DEVELOPMENT AND PROCESSING

290. GENERAL.

The FAA Instrument Approach Procedure Automation (IAPA) system has been developed and is being incrementally implemented. In addition to automated procedure development, the system provides for automated storage and transmittal of instrument flight procedures. AVN-100 should use the IAPA system to develop fixed-wing, original or amended, nondirectional beacon (NDB) and Very High Frequency Omni-directional Range (VOR) SIAP's; and Global Positioning System (GPS) instrument procedures to the extent permitted by approved IAPA programming. Use of IAPA is not mandatory; however, because IAPA ensures accurate computations and approved interpretation of criteria, it shall be used to the maximum extent permitted by certified software programming.

a. Waivers. The standardized, programmed criteria shall be applied to develop and store SIAP's using the design sequences of IAPA software. For nonstandard application of criteria, a waiver must be on file or initiated. SIAP's having design requirements or waivered construction that cannot be processed on IAPA must be completed manually.

b. Other SIAP types or additional instrument procedures should be developed on IAPA as software programming permits. Additional software programs to support these SIAP's and other instrument procedures will be implemented at a later date as time and resources permit.

291. IAPA RECORDS DISPOSITION. Use guidelines and procedures identified in Order 1350.15, Records Organization, Transfer, and Destruction Standards, to determine the correct disposition standards for all records created utilizing the IAPA system.

292-299. RESERVED.

SECTION 3. ESTABLISHMENT OF EN ROUTE AIRSPACE

320. RELATIONSHIP OF COP's TO AIRSPACE DIMENSIONS.

Application of these criteria considers the location of the COP for determining the dimensions of the required associated airspace. When it is anticipated that the COP will be established beyond 51 nautical miles from the facility, the location of the COP should be determined by AVN-100 during the development of airspace proposals within the region. On new facilities, a reasonably accurate estimate of the COP should be obtained during the site survey. Other data, such as MEA, MOCA, MRA, etc., should also be obtained at this time. This information will assure the completion of necessary airspace planning in the region, and will permit the description of all required airspace in the Notice of Proposed Rule Making (NPRM).

321. RELATIONSHIP OF MEA'S TO CONTROLLED AIRSPACE FLOORS.

a. Buffers. MEA's for routes wholly within controlled airspace will normally provide for a buffer above the floor of controlled airspace. This buffer will be at least 300 feet within Class E airspace containing terminal instrument procedure segments (feeder, initial, intermediate, final, missed approach), and 500 feet within the low altitude airway structure. However, exceptions may be made which provide only 300 feet buffer below these airways where the lesser buffer area will permit retaining a cardinal altitude or otherwise result in a definite operational advantage. Establish these buffers to the nearest 100-foot increments: e.g., 1049.99 feet becomes 1000 and 1050.00 feet becomes 1100 feet. Refer to FAA Order 7400.2, Procedures for Handling Airspace Matters.

b. Rounding. Where rounding off MEA's to the nearest 100 feet results in a vertical separation between the floor of controlled airspace and the MEA of not less than 451/251 feet, consider such separation as being in practical compliance with that of 500/300 feet specified in applicable criteria.

322-329. RESERVED.

SECTION 4. SUBSTITUTE EN ROUTE FLIGHT PROCEDURES

330. GENERAL.

a. Air Route Traffic Control Centers (ARTCC's) are responsible for specifying essential substitute airway or route segments (sub-routes) and fixes for use during scheduled or unscheduled VOR/VORTAC shutdowns.

b. AVN-100, in coordination with ARTCC's, determines when the length of outages or other factors require publication of sub-routes.

c. AVN provides flight inspection services, obstacle clearance verification, certification, and final approval of substitute routes.

331. FORMAT.

ARTCC's can use a format similar to that shown in figure 3-4 in preparing substitute routes for scheduled or unscheduled facility shutdowns, and for submission of the sub-route to AVN-100 for approval. Substitute routes shall be described from navigational fix to navigational fix, to accurately define the route to be used. An MEA and an MAA shall be provided for each route segment. Temporary reporting points should be substituted for the out-of-service facility and only those other reporting points which are designated as essential by Air Traffic. Normally, temporary reporting points over intersections will not be necessary where center radar coverage exists. An MRA shall be established for each temporary reporting point. Where a substitute route cannot be developed for an existing route or reporting point, indicate none under the substitute column.

332. FACILITIES USED.

Substitute routes should normally be based on VOR/VORTAC aids established and published for use in the altitude strata concerned. However, in the case of substitute routes in the upper airspace stratum, it may be necessary to establish routes by reference to VOR/VORTAC facilities utilized in the low altitude system. NDB facilities may only be utilized where VOR/VORTAC coverage is inadequate and ATC requirements necessitate use of such aids. Where operational necessity dictates, process an ESV request (see paragraph 210). Temporary reporting points may be established in connection with the substitute routes and, where possible, a temporary reporting point will be established over the facility being shutdown.

333. CONTROLLED AIRSPACE.

Substitute routes may be approved as long as the centerline of the route is contained within controlled airspace. Designation of additional controlled airspace to contain substitute routes need not be accomplished because of the temporary nature of the routes. Substitute routes for off-airway (non-Part 95) routes need not be in controlled airspace (see figures 3-1 and 3-2).

334. FLIGHT INSPECTION.

Substitute routes are flight inspected in accordance with FAA Order 8200.1. If substitute routes do not overlie existing routes, or are wider than existing routes (see figure 3-3), map studies are required to identify controlling obstacles. AVN-100 shall document controlling obstacles on FAA Form 8260-16, Transmittal of Airways/ Route Data. Retain these forms locally for future review. Flight inspection verifies controlling obstacles.

335. PLANNING AND COORDINATION.

The regional Airway Facilities Division will provide the dates of proposed scheduled shutdowns to AVN-100, who shall maintain a schedule of shutdowns and the estimated duration of the outages. AVN-100 shall act on this information as far in advance as possible to enable timely submission of the sub-routes to NFDC for publication. AVN-100 should be prepared for the eventuality when publication of sub-routes is not related to scheduled outages.

SUBSTITUTE ROUTE STRUCTURE

Snowflake, CO, VORTAC shutdown, scheduled or unscheduled. For substitute routes, MEA's, and Reporting Points, use the following:

LOW ALTITUDE

	Existing Airways	Substitute Routes	MEA/MAA
V220	SKI VORTAC to SNO VORTAC	SKI VORTAC to Temp SNO Int via SKI R-340	10000/17500
V220	SNO VORTAC to MTN VORTAC	Temp SNO Int to MTN VORTAC via MTN R-152	11000/17500
Direct	SNO VORTAC to ASPEN Int	None	
Off-Airway	SNO VORTAC to VAL VOR	Temp SNO Int to VAL VOR via SBT R-259 to SBT, SBT R-040 & VAL R-220	15000/37000
	Existing Reporting Point	**Temporary Reporting Point**	**MRA**
	SNO VORTAC	Temp SNO Int: SKI R-340/82 & SBT R-259/65	10000
	RUTHY	SKI R-340/43	8500
	SARDY	Temp SARDY Int: MTN R-152/60 & SBT R-270	11000
	SILVR	None	

HIGH ALTITUDE

	Existing Routes	Substitute Routes	MEA/MAA
J233	BRR VORTAC to SNO VORTAC	BRR VORTAC to Temp SNO DME via BRR R-314	20000/45000
J233	SNO VORTAC to FUN VORTAC	Temp SNO DME to FUN VORTAC via FUN R-148	20000/45000
	Existing Reporting Point	**Temporary Reporting Point**	**MRA**
	SNO VORTAC	Temp SNO DME: BRR R-314/159 & FUN R-148/133	20000
	HILAN	BRR R-314/82	18000

Approved: _____, **Date** _____

(Name), Manager
National Flight Procedures Office, AVN-100

Appendix 4. SUBSTITUTE ROUTE STRUCTURE

336. PROCESSING.

a. Lead Time. Process data concerning substitute routes sufficiently in advance of the effective date of the facility shutdown to assure publication when charting is required. To provide necessary lead time, the substitute routes must be forwarded to NFDC nine weeks prior to the chart's effective date. If the lead time cannot be provided, delay the shutdown or consider printing a special graphic NOTAM. Normally, shut-down of facilities scheduled for 28 days (half the life of the en route chart) or less will not be charted; however, traffic considerations at major terminals may make charting necessary for the short term shut-downs.

b. Submissions.

(1) **ARTCC** submitted substitute routes (see figure 4) require the signature of the AVN-100 Manager, or a delegated representative. This signature thereby indicates operational approval of these sub-routes for unscheduled use. This approval shall be submitted directly to the ARTCC concerned. See paragraph 338b.

(2) **When AVN-100** determines that publication is required for a scheduled or extended unscheduled outage, AVN-100 forwards the ARTCC submitted substitute routes to NFDC for publication (see paragraph 338a).

337. PERIODIC REVIEW.

a. The ARTCC should review substitute en route flight procedures at least once every 4 years and at any time changes occur in the airway structure. The ARTCC shall submit any required modifications to AVN-100 for certification and approval.

b. AVN-100:

(1) Notify the responsible ARTCC and withdraw approval when:

(a) Frequency protection can no longer be provided to support the sub-route procedure.

(b) Flight inspection data is not available to support continued certification and approval of the sub-route procedure.

(2) **Review existing** and proposed sub-routes for required obstacle clearance at least once every 4 years.

(3) **Notify the ARTCC** of any amendments necessary.

338. DISTRIBUTION.

a. For Publication. List the shutdown dates in the cover letter.

FSD	1 copy
ATA-110	2 copies
ARTCC	1 copy
AVN-100	Original

b. Non-Publication.

FSD	1 copy
ARTCC	1 copy
AVN-100	Original

339. RESERVED.

SECTION 5. OFF-AIRWAY ROUTES

340. ESTABLISHMENT.

Establish off-airway routes in the same manner, and in accordance with the same criteria, as airways and jet routes. Off-airway routes predicated on public navigation facilities and wholly contained within controlled airspace will be published as direct 14 CFR Part 95 routes. Routes predicated on privately owned navigation facilities or not contained wholly within controlled airspace will be published as off-airway routes.

a. Process. Normally, requests for the establishment of off-airway routes are **initiated** by a scheduled air carrier operator through its Principal Operations Inspector (POI). Upon receipt of a request for an off-airway route, AVN-100 shall coordinate with the Air Traffic Division. The Air Traffic Division will process the route in accordance with Handbook 7400.2 to ascertain that there is no conflict in use of the airspace. Following AT coordination, AVN-100 shall evaluate the adequacy of off-airway routes. Consider the following:

(1) **Type of aircraft** and the navigation systems used.

(2) **Proximity to military bases,** training areas, and low level military routes.

(3) **Adequacy of communications** along the route.

b. AVN-100 Documentation. Document MEA's and related procedural data on FAA Form 8260-16. Return a copy of the form to the FSDO, indicating approval or disapproval of its request.

341. LISTING.

Pursuant to the responsibility of the Air Transportation Division (AFS-200) for surveillance of all authorized navigation facilities and routes, a requirement exists for maintaining a current listing of off-airway routes which have been assigned to air carriers by AFS operations personnel. These routes are documented in the National Flight Data Digest (NFDD) which is published by NFDC when changes occur.

342. OFF-AIRWAY DATA.

AVN-100 should establish arrangements for obtaining and maintaining complete off-airway route information. The following is suggested:

a. FSDO's provide AVN-100 with copies of all changes or cancellations to IFR off-airway route authorizations.

b. AVN-100 uses this information for development of flight inspection requirements and for maintaining current records.

343. PROCESSING DATA TO NFDC.

Use FAA Form 8260-16 to forward IFR off-airway data to NFDC. Do not designate off-airway non-14 CFR Part 95 routes as special routes even though associated with special instrument approach procedures.

344-349. RESERVED.

SECTION 6. NEW OR REVISED JET ROUTES

350. COORDINATION PROCEDURES

a. The regional Air Traffic Division provides AVN-100 with the Notice of Proposed Rule Making (NPRM) for new or revised routes.

b. AVN-100 Action: AVN-100 requests flight inspection to furnish a copy of the NPRM and forwards preliminary evaluation results to the AT division. If the proposal is satisfactory, include changeover point information. If the route is not satisfactory, provide alternate recommendations.

351. PUBLICATION OF PROCEDURAL DATA.

a. AVN-100 shall forward final route data, with the NPRM docket number, to NFDC on FAA Form 8260-16. This form must be submitted within the comment period specified in the NPRM. Conditions found during surveillance inspections of established routes, which would require a change of MEA, MOCA, MAA, or COP from the previously published data, shall be brought to the attention of the procedures specialist for corrective action.

b. The ARTCC, in conjunction with the regional System Management Branch (Axx-530), is responsible for developing airspace requirements for the routes published in 14 CFR Parts 71 and 75; and AVN-100 is responsible for developing the related procedural data published in 14 CFR Part 95.

352-359. RESERVED.

SECTION 7. RADAR VECTORING ALTITUDE CHARTS

360. CHART PREPARATION.

Radar vectoring charts are developed for areas where there are numerous minimum vectoring altitudes (MVA's) due to variable terrain features or manmade obstacles. The responsible ATC facility determines whether its radar systems require vectoring charts. Where vectoring charts are required, the ATC facility develops the basic chart in accordance with instructions contained in Order 7210.3, Facility Operations and Administration, or Order 7210.37, En Route Minimum IFR Altitude (MIA) Sector charts. AVN-100 personnel may be requested to participate in original chart development at the option of the ATC facility.

361. AREAS OF CONSIDERATION.

The area considered for obstacle clearance shall be the maximum range of the radar. This area may be subdivided into sectors to gain relief from obstacles which are clear of the area in which flight is to be conducted. There is no prescribed limit on the size, shape, or orientation of the sectors; however, they must be designed with consideration to aircraft maneuvering ability, obstacle clearance requirements, and air traffic flow requirements. To avoid excessively high minimum altitudes within a sector, prominent high obstacles may be isolated by enclosing the obstacle with a buffer area whose boundaries are at least three miles from the obstacle (five miles if 40 miles or more from the radar antenna). Vectoring charts should be designed to emphasize simplicity and safety in radar traffic control applications. Terminal MVA charts are oriented to magnetic north. An example of a Terminal MVA chart can be seen in Order 7210.3, chapter 3, section 9.

362. OBSTACLE CLEARANCE.

Obstacle clearance shall be provided over all obstacles within the vectoring areas or sectors established by ATC on the Terminal MVA chart or the En Route MIA chart, irrespective of the coverage determined by flight inspection. Selected altitudes shall provide clearance over all obstacles outside of the sector within 3 miles of the sector boundaries (5 miles if 40 miles or more from the radar antenna). In areas of overlapping radar coverage, where data from an antenna more than 40 miles away may be used, only 5 miles clearance shall be applied. ATC facilities will apply 1000 feet of obstacle clearance in non-mountainous areas and 2000 feet in areas designated as mountainous in 14 CFR Part 95. MVA's and MIA's should provide at least 300 feet above the floor of controlled airspace. Round off resultant altitudes to the nearest 100 feet. For example, 1149.99 feet becomes 1100 feet, and 1150.00 feet becomes 1200 feet.

NOTE: Controlled airspace considerations are the responsibility of ATC facilities. AVN-100 review shall assure the obstacle clearance requirements are met. It is the responsibility of the controller to determine that a target return is adequate for radar control purposes.

363. OBSTACLE CLEARANCE REDUCTION.

Where lower altitudes are required in designated mountainous areas to achieve compatibility with terminal routes or to permit vectoring to an instrument approach procedure, AVN-100 may approve reductions to the minimum altitude in accordance with the following:

a. ASR - 1000 feet of obstacle clearance may be authorized in accordance with Order 8260.3, paragraph 1041b(3).

b. ARSR - Reductions to not less than 1700 or 1500 feet of terrain clearance may be authorized with appropriate obstacle clearance in accordance with en route criteria contained in Order 8260.3, paragraphs 1720b(1) and (2).

c. When approving altitudes with less than 2000 feet of obstacle clearance, a record of such approval shall be maintained by AVN-100.

364. RADAR DATA PROCESSING (RDP).

ATC Centers are equipped with RDP that receives radar return from multiple antennas. MIA charts for these facilities shall provide obstacle clearance in accordance with paragraph 362 above or Order 8260.3, chapter 17.

365. CHART REVIEW AND APPROVAL.

a. Civil Vectoring Charts.

(1) ATC Action. The ATC facility prepares MVA/MIA charts, drawn directly on current sectional charts. It forwards a radar vectoring altitude chart package, consisting of two sectional chart MVA or MIA depictions and two FAA Forms 7210-9, Minimum IFR Altitude/ Minimum Vectoring Altitude Obstruction Documentation, to AVN-100 for review. The ATC facility updates, as required, and/or reviews the MVA/MIA chart annually to ensure accuracy, and jointly approves any amendment or review with AVN-100.

(2) AVN-100 Action. Review radar vectoring altitude chart packages only to ensure that obstacle clearance requirements are met. Coordinate any recommended adjustments in chart design, or necessary changes in vectoring altitudes or controlling obstructions, with the originating ATC facility. Upon completion of a satisfactory review, approve the chart over the signature of the AVN-100 Manager, or his/her designated representative, on the Form 7210-9, and return it to the ATC facility. Retain one copy of the MVA chart or the MIA chart, and FAA Form 7210-9.

b. Military MVA Charts. The FAA has no responsibility for the technical review of military MVA charts, with the exception of U.S. Army charts, which are reviewed in accordance with the NAT 127 Agreement and Order 8260.15. Honor other military requests on a time-available basis in accordance with guidelines contained in chapter 6.

366. EMERGENCY OBSTRUCTION VIDEO MAP (EOVM).

a. Establishment. An EOVM is established by ATC at terminal radar facilities that have radar coverage in designated mountainous areas, and is intended to facilitate advisory service to aircraft in an emergency situation wherein appropriate terrain/obstacle clearance minimum altitude cannot be maintained. Order 7210.3 states EOVM design, preparation, and production requirements.

b. EOVM Verification. The AT facility checks the original EOVM package and any subsequent changes for adequacy, and then provides a copy to AVN-100 to verify the accuracy of its information. Annually, the AT facility reviews the EOVM for adequacy, and forwards the results of its review, along with any changes, to AVN-100 for review and verification.

c. AVN-100 Review. Limit review of EOVM's provided by the AT facility to verification of contour elevations, mountain peaks, and other obstructions that are selected and depicted on a sectional chart.

367-399. RESERVED.

U.S. Department
of Transportation

**Federal Aviation
Administration**

Directive Feedback Information

Please submit any written comments or recommendations for improving this directive, or suggest new items or subjects to be added to it. Also, if you find an error, please tell us about it.

Subject: Order 8260.19C CHG 1, Flight Procedures and Airspace

To: DOT/FAA
ATTN: Flight Procedure Standards Branch, AFS-420
PO Box 25082
Oklahoma City, OK 73125

(Please check all appropriate line items)

☐ An error (procedural or typographical) has been noted in paragraph _____ on page _____.

☐ Recommend paragraph _____ on page _____ be changed as follows:
(*attach separate sheet if necessary*)

☐ In a future change to this directive, please include coverage on the following subject:
(*briefly describe what you want added*):

☐ Other comments:

☐ I would like to discuss the above. Please contact me.

Submitted by: _____ Date: _____

FTS Telephone Number: _____ Routing Symbol: _____

FAA Form 1320-19 (8-89)