FAA-E-2679a
June 22, 1982
SUPERSEDING
FAA-E-2679, 11/22/77

DEPARTMENT OF TRANSPORTATION
FEDERAL AVIATION ADMINISTRATION
SPECIFICATION

COMMON DIGITIZER-2 (CD-2)

1. SCOPE

1.1 Scope .- This specification establishes the requirements for the design, development, construction, performance, testing, installation, and system integration of Common Digitizer-2 (CD-2) equipment for the FAA National Airspace System (NAS). The purpose of the CD-2 equipment is to improve the digital radar target and weather data provided from long-range and terminal radar sites to air traffic control facilities with automated display equipment. The CD-2 will improve the continuity of this data and thereby improve the surveillance function of the automated air traffic control systems.

(a) The CD-2 will provide automatic detection, correlation and transfer of weather and aircraft target information derived from terminal and long-range primary surveillance radars and beacon radar systems. The CD-2 equipment will suppress the transmission of target reports from the following artifacts which may be present .in the data provided to the CD-2 by the interfacing radar equipment: weather clutter, ground clutter (including clutter residue), radar system noise, and beacon fruit replies. For each aircraft target within the *coverage* of the radars, a single target report message containing the target's position, strength, status, and if available from the beacon radar system, information from up tochreemodes of beacon interrogation will be compiled and transmitted. The CD-2 will also detect and *measure* the weather echoes provided by the primary surveillance radars. It will generate and report the range, azimuth, and up to eight levels of intensity for the weather returns. #

(b) The CD-2 will be a modular, programmable device capable of operating with a wide variety of radar sensor equipment in both present and planned applications. Complete system documentation, as well as installation and integration services will be provided as required by the contract.

1.2 Applicable definitions and abbreviations.- The following definitions apply to the terms and abbreviations used within this specification:

ACP - Azimuth Change Pulse. A series of pulses used to measure the rotation of a radar antenna with respect to a particular reference point. Normally, there are 4,096 pulses per revolution of the antenna. Some improved pulse generators which generate 16,384 pulses per revolution will be available in the future. The current ACP equates to approximately 0.088 degrees while the improved ACP equals approximately 0.022 degrees. Unless otherwise noted, ACP will equal 0.088 degrees.

A/D - Analog - to - digital

ADC - Azimuth Data Converter. A Government-furnished unit which uses synchro information to generate ACP and ARP data.

ADCOM - The Aerospace Defense Command of the U.S. Air Force. ADCOM is a-joint user of many of the FAA's long-range radar sensors. ADCOM maintains an aircraft defense and air traffic control system for their interceptor aircraft using radar data from joint-use long-range radars around the perimeter of the continental United States.

AIMS - Air Traffic Control Radar Beacon System, Identification Friend or Foe, Mark XII System. See "Mode 4".

AMPS - Air Traffic Control Radar Beacon System Monopulse Processing Subsystem. A possible future-beacon ground system which will use monopulse techniques to provide improved beacon information to air traffic control facilities.

Analog - Pertaining to data in the form of coninuously variable physical quantities. The term also refers to the equipment which uses analog signals in much of its internal circuitry.

ARP - Azimuth Reference Pulse. A pulse which occurs once per antenna revolution to identify a specific point of reference from which azimuth is measured. Normally, the pulse occurs at or near true North; accordingly, the ARP is sometimes called the North Mark.

ARTCC - Air Route Traffic Control Center. The ARTCC is the central air traffic control facility for a specific portion of the national en route airspace. Thus, the en route radar data is provided to one or, on occasion, more than one ARTCC.

ATCT - Airport Traffic Control Tower. The ATCT is the central air traffic control facility for the terminal airspace surrounding a specific airport. Thus, the terminal radar data is provided to an ATCT or a nearby radar control facility which serves the ATCT. Some terminal radars also provide radar data to ARTCCs or CERAP facilities.

Beacon Radar - This term is used to refer to the Air Traffic Control Radar Beacon System (ATCRBS) in which an active airborne transponder generates a particular coded reply in response to a coded request or interrogation. The terms "beacon" and "secondary radar" are used to refer to the ATCRBS and its radar equipment.

BRC - Beacon Reply Converter.

BTE - Beacon. Target Extractor

Byte - A digital word which is eight bits in length.

CCA - Circuit Card Assembly. A moderately complex assembly of discrete parts consisting of active and passive electronic components, their interconnecting wire or printed circuit wiring conductors, connectors, mounting hardware and similar pieces which are operated and maintained as a unit. In this specification, CCAs include both wired-in and plug-in assemblies which use either printed wiring techniques or point-to-point wiring. They generally consist of a flat nonconducting baseboard on which the electronic components are mounted and which serves as a major structural element. Thus, a power supply with large transformers, heat sinks and regulators on a metal chassis is not a CCA, even if it is a plug-in assembly. Digital logic boards as well as those incorporating linear or discrete semiconductor components are CCAs regardless of the method used to interconnect the components. Backplanes and mother boards into which plug-in assemblies are inserted are not CCAs if they contain only resistors, capacitors and interconnecting cable and wiring.

CD-Z - Common Digitizer-2. This is the second generation common digitizer defined by this specification. Unless otherwise noted in the particular context, or unless obviously not applicable, the term "CD-2" shall apply to all four CD-2 configurations as defined herein. (For instance, azimuth input signal requirements apply to all CD-2 configurations while weather processing requirements apply to all configurations except the CD-2B.)

CD-2A - The long--range, FAA version of the CD-2 which provides search, beacon, and weather data to FAA users,

CD-2B - The long-range FAA version of the CD-2 which provides only beacon data to FAA users.

CD-2C - The long-range, joint-use (common) version of the CD-2 which provides search, beacon, and weather data to FAA users, and search, beacon, AIMS, and height finder data to ADCOM users.

CD-2D - The terminal FAA version of the CD-2 which provides search, beacon, and weather data.to FAA users.

CERAP - Combined Center Radar Approach Control. This facility combines the en route functions of an ARTCC with the approach control functions of an ATCT. It is served by both long-range and terminal radars.

CIM - Control and Interface Module.

Closely-Spaced Replies - A closely-spaced reply condition exists when two or more beacon replies are received in a single sweep such that the first framing pulse (Fl) of the subsequent reply occurs after the SPI position of the proceeding reply but within 50 us of the Fl of that reply. The replies do not mutually interfere and unambiguous extraction of the range and code of each reply is possible.

Clutter - The echoes or returns from a search radar which do not represent the desired information. For aircraft detection purposes, ground, sea, and weather returns qualify as clutter.

Code Accuracy - The correctness of a beacon code contained in a beacon target report.

CP - Circular Polarization. A technique used by search radars to-eliminate or separate weather returns from target returns.

DABS - Discrete Address Beacon System. A proposed beacon system which will provide a surveillance and data interchange capability for correctly equipped aircraft.

Digital - Pertaining to data in the form of digits, as in a series of pulses. The term also refers to the equipment which uses digital signals to a great extent in its internal circuitry.

Digital Data Bus - A digital technique, and its hardware implementation, for using a common data communication path between many distinct electronic devices. The bus may be one in which several bits of data are transmitted in parallel or it may transmit the bits in a series. A serial bus is sometimes called a loop if it recirculates back to itself.

Discrete - Separate, individually distinct, noncontinuous. When used to refer to a beacon target, it denotes a Mode 3/A code with at least one non-zero bit in locations Cl, C2, C4, Dl, D2, or D4.

ECCM - Electronic Counter-Countermeasures. Radar techniques which help reduce its vulnerability to ECM.

ECM - Electronic Countermeasures. Techniques for reducing a radar's effectiveness by obscuring a target, or radiating energy which disrupts the radar's operation.'

Equipment - An electronic apparatus which is capable of performing its assigned functions with minimal support from other units. In this specification, the CD-2, its card tester, its program development set, the associated radar sets and similar units are, defined as equipments.

FAA - Federal Aviation Administration

Fall Time - The time required for a digital signal to decline from its active state to its inactive state. It is measured from the time the signal amplitude reaches 90 percent of its steady-state active value to the time it reaches 10 percent of that value. For a positive pulse in a positive logic system, the fall time is measured on the downward sloping edge of the pulse.

False Target - A search or beacon target report generated and transmitted by the CD-2 which does not represent the correct position and status of a true aircraft because of a target detection limitation in the CD-2. False targets include erroneous search reports caused by clutter, ECM, or receiver noise as well as erroneous beacon targets caused by fruit and multipath replies. Beacon and search splits are also false targets, but reports from test targets, permanent echoes, or reflections are not.

Fruit - A term which specifically refers to beacon replies which are generated in response to an interrogation by a nearby beacon radar and which are received by the beacon receiver under discussion.

I A C P - Improved ACP. See ACP.

Interleaved Reply - An interleaved reply condition exists when the beacon replies are received in a single sweep such that F1 of the second reply occurs after F1 but before the SPI pulse position of the first reply, provided that the pulses or pulse positions of either reply do not overlap, and are separated from, the pulses or pulse positions of the other reply by at least 65 ns at their 50 percent amplitude point. The replies do not mutually interfere, so unambiguous extraction of the range and code of each reply is possible. It is possible for more than two replies to be interleaved.

LSB - Least Significant Bit. The bit in a digital word which has the least significance or value.

MC - Maintenance Console

Metric System - The international system of weights and measures, also known as the SI system. In general) the linear dimensions herein will be specified in English units with the metric equivalent in parentheses; target range is a major exception (see nautical mile). Temperature will be given in degrees Celsius only. In all instances where the two systems are used to specify a value, the first one given will be the value intended and the second measure is for information only. No added precision is intended from additional significant figures which may be present in the second equivalent expression.

Microprocessor - A small general purpose computer which can be completely installed on a single electronic circuit board or a few such boards. Often referred to as a micro-Computer, it may be programmable in machine language only or it may be programmable in both machine language and microcode. It is a dedicated computer performing only specific functions and does not have unnecessary or general purpose input or output devices, Its program resides in programmable read-only memory.

MIG - Military Interface Group

Mode 4 - A term which identifies the Defense Department's secure aircraft identification system; also called Mark XII or AIMS.

Modem - A contraction of modulator and demodulator. The term denotes those transmitters and receivers which encode, combine, modulate (and the equivalent reverse operations) digital information for transmission to and reception from remote locations. In this specification, modem and data set will be used interchangeably to identify the digital data transmission equipment.

Module - A major, functionally complete unit of electronic assemblies. In this specification, the BTE, STE, CIM, MC and MIG are modules within the CD-2. Similarly, the plug-in assembly tester, radar simulator and program development set contain modules such as PROM programmers, tape units, control modules, signal generators, etc. Each module may contain circuit card assemblies, power supplies, backplanes and similar assemblies as appropriate.

MSB - Most Significant Bit. The bit in a digital word which has the most significance or greatest value.

MTBF - Mean Time Before Failure. For a particular interval, the functioning life of a population of an item divided by the total number of failures within the population during the measurement interval.

MTBO - Mean Time Between Outages. The average time that a particular equipment or system, including any redundant elements, will continue to provide correct, reliable operation or data to a defined user.

MTD - Moving Target Detector. A proposed new search radar, or a modification to existing radar types, which uses pulse-doppler techniques to provide near-optimum search target detection performance.

MTI - Moving Target Indicator;

MTTR - Mean Time To Restore. The mean time required to restore a failed function to an operation-al condition. The function may be restorable by corrective maintenance repair, substitution of modules, board replacement, or the activation of a redundant element.

Multipath - A term which refers specifically to a beacon radio frequency path which is established via a natural reflecting object, such as ocean or land terrain features. The term may also denote the erroneous beacon reply or false beacon report resulting from such a path. It is distinct from "reflection".

Nautical Mile - The unit of linear distance most often used in sea, air, and space navigation. Throughout this specification, the terms mile and nautical mile (and its abbreviation nmi) will be used interchangeably and shall be equal to 6076.12 feet (1.852 km).

NAS - National Airspace System. A term used to denote the FAA's air traffic control system in general.

On-Line - A term used to designate a piece of equipment which is in operation and is providing data to a user. In this specification, the on-line CD-2 channel is that channel which is actually providing data to the modem transmitters.

Overlapped Replies- An overlapped reply condition exists when two or more beacon replies are received in a single sweep such that a framing or information pulse or pulse position of one reply partially or fully overlaps a pulse or pulse position of another reply. Partial overlap will result in either a wide pulse or else an incorrect leading edge time for one or more pulse in the received reply train. It is often possible to unambiguously extract the range and code of partially overlapped replies. Fully overlapped replies do not produce wide pulses or timing aberations and, hence, cannot be decoded unambiguously.

PE - Permanent Echo. A term which designates a natural or manmade-object or device which provides a reliable radar return or reply which is very similar to an aircraft's response. The term is equally applicable to search and beacon and implies that the status and location of the resulting target report is reasonably unambiguous and consistent.

PROM - Programmable Read-Only Memory integrated circuit chip. A PROM-is a-semiconductor memory chip which is normally filled with the appropriate data (programmed) once during the design and programming of its associated microprocessor. It is then used only as a source of data by the processor to control its operation or to provide specific, unchanging data in response to a given request. Its data content is permanent in normal equipment operation. The programming of the chip may be able to be accomplished only once, as in a fusible link PROM, or may be able to be repeatedly changed using appropriate external equipment and techniques. PROMs with this latter capability are usually identified as EPROMs (electrically programmable read-only memories). Throughout this specification, PROM and EPROM will be used interchangeably to denote memory chips with the ability to be programmed repeatedly using equipment external to the operational CD-2 equipment.

Pulse width - The duration of a pulse as measured at the 50 percent amplitude points.

Radar - Electronic surveillance equipment which transmits radio-frequency energy and receives echoes of that energy (search) or retransmissions triggered by that energy (beacon) for the purpose of establishing the location of aircraft and weather targets. The term, as used in this specification, may denote either search or beacon radar or both, depending on its context.

Radar Mile - The time it takes for radio-frequency energy to travel two nautical miles (one mile out and one mile back). Numerically, it is equal to 12.359 microseconds.

RAM - Random Access Memory. A RAM is a semiconductor memory chip, or a memory composed of such chips, which can be written into and read out of in a randomly addressable pattern under control of a processing element. It is used as a temporary storage for data which must be 'available within a very short access time. It may be either dynamic (refreshed) or static; both are volatile in that the data is lost when power is removed.

RBPM - Radar Beacon Performance Monitor. The RBPM is to be a comprehensive monitor of the beacon interrogator, receiver, and radio-frequency components. Its outputs will be provided to the CD-2 for reformatting and transmission to the users of the radar's data.

Reflection - A term used to specifically denote a beacon reply (or a target report based on several such replies approximating a true target's reply sequence) which is the result of a radio-frequency path being established between the beacon radar's antenna and the aircraft via a manmade reflecting object. It is distinct from "multipath". Target reports from reflections will have range or azimuth errors or both because of the indirect path via which the information was obtained.

Report - The term used to identify the output of the target detector which represents the position and status of the target. It is distinct from target echoes or replies which are used by the detector to decide on the presence or absence of a target. Normally, there is a single target report generated and transmitted to the users once per antenna scan. Technically, the output of the weather contour generator is also a report but it is termed a "weather message" to avoid the confusion which "weather report" may cause.

Rise Time - The time required for a digital signal to rise from its in active state to its active state. It is measured from the time the signal amplitude reaches 10 percent of its steady-state active value to the time it reaches 90 percent of that value. For a positive pulse in a positive logic system, the rise time is measured on the upward sloping edge of the pulse.

ROM - Read-Only Memory integrated circuit chip. A ROM is semiconductor memory chip which is programmed only once (during chip manufacture) and then serves strictly as a source of data in response to specific requests. It is not alterable and its data content is permanent.

RTQC - Real-Time Quality Control. A term used to denote the on-line automatic test data used by the CD-Z and-other FAA equipment to continuously verify the correct operation of the CD-2 and other equipment in the NAS.

Run Length - The total number of echoes or replies received by the radar and CD-2 from a given target in a single sequence of returns.

Scan - The time it takes for the radar antenna to complete one full revolution of 360 degrees. It is also called "scan time".

Search Radar - This term is used to refer to the aircraft surveillance radar which transmits radio-frequency energy and receives echoes ("skin paints") from objects in its path. No active participation of the target is required. The search radar is often called the "primary" radar because of this nonactive--target mode of operation.

Shall - A verb which identifies a required function or capability.

Simple Internal Means - This term, as used herein, denotes a hardware means' to control an alignment or site adaptation function or other feature that is not frequently operated, adjusted or altered. Refer to 3.5.2.8.4 herein for specific requirements.

SNR - Signal-to-Noise Ratio. The ratio of a signal to whatever noise may exist in the absence of that signal. In this specification, the SNR of a video, is defined as the ratio of the absolute peak voltage of the signal in the presence of noise to the root-mean-square value of the video noise voltage.

SPI - Special Position Identification pulse. A pulse in the beacon reply train. See FAA Order 1010.51A for additional information.

Split - A term used to denote the false report(s) in an instance where multiple target reports are generated and transmitted from a single aircraft target as the result of the limitations of the CD-2's target detectors. Search and beacon splits are possible. For the purposes of this specification, false reports caused by aircraft velocity or maneuvering within specified limits or by other radar phenomena permitted and described herein are defined as splits when the true report is also generated and transmitted by the CD-2.

Sweep - The time associated with the interpulse period of a radar. It is also known as the listening time. It begins at radar range zero time and ends at the beginning of the next radar pulse.

Test Target - A target report resulting from test signals injected anywhere in the radar receiver-digitizer chain. It can be a search, beacon, or weather target.

us - In this specification, "us" is used as an abbreviation for "microsecond."

Voltage - All signal and CD-2 power supply output voltages are specified with respect to the CD-2's signal ground.

Will - A verb which denotes intended or future actions or capabilities which are not requirements of this specification.

Word - A group of pulses or the bits of information they represent which are acted upon, treated, and processed as a group. Normally, the term applies to the internal manipulation and organization of information in a digital computer.

2. APPLICABLE DOCUMENTS

2.1 FAA documents.- The following FAA specifications., standards, and publications, of the issues specified in the invitation for bids or request for proposals, form a part of this specification and are applicable to the extent specified herein.

2.1.1 FAA specifications.-

FAA-D-2494, Part 1	Instruction Book, Manuscripts, Technical; Equipment and Systems Requirements, Preparation of Manuscripts
FAA-D-2494, Part 2	Instruction Book, Manuscripts, Technical; Equipment and Systems Requirements, Preparation of Reproducible Copy
FAA-E-2217, Part 1	2400 Bit-Per-Second Data Set Equipment, General Requirement
FAA-E-2217, Part 2	2400 Bit-Per-Second Data Set Equipment, Data Transmitter Terminal Equipment
FAA-E-2217, Part 3	2400 Bit-Per-Second Data Set Equipment, Data Receiver Terminal Equipment
FAA-G-1210	Provisioning Technical Documentation
FAA-G-1375	Spare Parts-Peculiar for Electronic, Electrical, and Mechanical Equipment
FAA-G-2100, Part 1	Electronic Equipment, General Requirements; Part 1, Basic Requirements for All Equipments
FAA-G-2100, Part 2	Electronic 'Equipment, General Requirements; Part 2, Requirements for Equipments Employing Electron Tubes
FAA-G-2100, Part 3	Electronic Equipment, General Requirements; Part 3, Requirements for Equipments Employing Semiconductor Devices
FAA-G-2100, Part 4	Electronic Equipment, General Requirements; Part 4, Requirements for Equipments Employing Printed Wiring Techniques
FAA-G-2100, Part 5	Electronic Equipment, General Requirements; Part 5, Requirements for Equipments Employing Microelectronic Devices
FAA-G-2100, Supplement 4	Electronic Equipment, General Requirements; FAA List of Applicable Documents

2.1.2 FAA standards.-

FAA-STD-002	Engineering Drawings
FAA-STD-007	Program Evaluation Review Technique (PERT) Procedures for Contract Use
FAA-STD-010	Graphic Symbols for Digital Logic Equipment
FAA-STD-016	Quality Control System Program Requirements
# FAA-STD-021	Configuration Management (Contractor Requirements)

2.1.3 FAA publications.-

FAA Order 1010.51, U.S. National Standard for the Mark X (SIF) Air Traffic Control Radar Beacon System (ATCRBS) Characteristics

FAA Order 1800.8, National Airspace System Configuration Management

NAS-MO-311, Computer Program Functional Specification, Message Entry and Checking

2.2 Military and Federal publications. - The following Military and Federal publications, of the issues in effect on the date of the invitation for bids or request for proposals, form a part of this specification and are applicable to the extent specified herein.

2.2.1 Military specifications.-

MIL-E-17555	Electronic and Electrical Equipment Accessories and Repair Parts, Packaging and Packing Of
MIL-E-75	Electron Tubes, Preparation for Delivery of
MIL-S-20708	General Specification for Synchros

2.2.2 Military standards.-

MIL-STD-275	Printed Wiring for Electronic Equipment
MIL-STD-461	Electrauagnetic Interference Characteristics, Requirements for Equipment and Notice 4 (EL)
MIL-STD-470	Maintainability Program Requirements for Systems and Equipment
MIL-STD-471	Maintainability Verification Demonstration and Evaluation
MIL-STD-756	Reliability Prediction
MIL-STD-781	Reliability Tests, Exponential Distribution
MIL-STD-785	Reliability Programs for Systems and Equipment Development and Production
MIL-STD-1130	Solderless Wrapped Electrical Connectors
MIL-STD-1472	Human Engineering Design Criteria for Military systems, Equipment and Facilities

2.2.3 Military publications.-

MIL-HDBK-472 Maintainability Predictions

RADCTR-75-22 RADC Nonelectronic Reliability Notebook

2.2.4 Federal standard.-

Federal Standard No. 595 - Colors

2.3 Other publications - The following publications, of the issues in effect on the date of the Invitation for bids or request for proposals, form a part of this specification and are applicable to the extent specified herein.

Electronic Industries Association Standard RS-449, General Purpose 37-Position and 9-Position Interface for Data Terminal Equipment and Data Circuit - Terminating Equipment Employing Serial Binary Data Interchange.

International Standards Organization Standard 3309, Data Communication - High-Level Data Link Control Procedures - Frame Structure.

National Fire Protection Association No. 70 - National Electrical Code

Institute of Electrical and Electronic Engineers Standard 488-1975 - Digital Interface for Programmable Instrumentation

American National Standards Institute, Y1.l - Abbrevations for Use on Drawings and in Text

American National Standards Institute, Y32.14 - Graphic Symbols for Logic Diagrams (Two-State Devices)

2.4 Sources of documents.-

2.4.1 FAA documents.- Copies of the applicable FAA specifications and drawings and other publications whose sources are not identified in the following paragraphs may be obtained from the Federal Aviation Administration, Washington, D.C. 20591, Attention: Contracting Officer. Requests should fully identify the material desired; use specification numbers, dates, amendment numbers, and complete drawing numbers. The requests should also identify the invitation for bids, request for proposals, or contract involved, or other use-to be made of the requested material.

2.4.2 Military documents.- Single copies of the Military specifications, standards, and publications may be obtained from. the Naval Publications and Forms Center, 5801 Tabor Avenue, Philadelphia, PA 19120. The RADC Nonelectronic Reliability Notebook may be obtained from the National Technical Information Service, U.S. Department of Commerce, 5285 Port Royal Road, Springfield, Virginia 22161, telephone number 703-557-4650. Mailed requests should cite the invitation for bids, request for proposals, or contract for which the materials are needed.

2.4.3 Federal documents.- Information on obtaining copies of Federal specifications and standards may be obtained from the General Services Administration offices in Washington, D.C.; Auburn, Washington; San Francisco; Denver; Kansas City, Missouri; Atlanta; Chicago; New York; Boston; New Orleans; Fort Worth; and Los Angeles.

2.4.4 National Electrical Code. - Information on obtaining copies of the National Electrical Code may be obtained from the National Fire Protection Association, 470 Atlantic Avenue, Boston, MA 02210.

2.4.5 IEEE standard. - Copies of IEEE STD 488-1975 are available from the IEEE Service Center, 445 Hoes Lane Piscataway, NJ 08854.

2.4.6 American National Standards Institute, Inc., publications.- Requests for obtaining copies of ANSI publications should be directed to American National Standards Institute, Inc., 1430 Broadway, New York, New York 10018.

2.4.7 Electronic Industries Association publications. - Requests for copies of EIA documents should be directed to Electronic Industries Association, 2001 Eye Street, N.W., Washington, D.C. 20006.

2.5 Instruction manuals for associated equipment.- Manuals for equipments interfacing with the CD-2, including maintenance and modification manuals, form a part of this specification to the extent specified herein. These manuals will not be furnished for the preparation of proposals. However, reference copies will be available in the Department of Transportation Library in Federal Office Building 10A, Washington, D.C.

2.6 Precedence of documents.- If the requirements of the contract, this specification, or subsidiary documents are in conflict, the following precedence shall apply:

(a) Contract - The contract shall have precedence over all other documents.

(b) Specification - This specification shall have precedence over all subsidiary documents referenced herein with the sole exception of the national standard for the beacon system identified in 2.1.3. In the event of conflict between that standard and this specification, the standard shall govern.

3. REQUIREMENTS

3.1 General.- The contractor shall provide all of the services and materials necessary to design, develop, fabricate, test, deliver, install, interface, and,checkout the equipments required by this specification and the contract on a turnkey basis. It shall supply the major deliverable items tabulated below in the quantities and at the times required by the contract. Any feature or item necessary to achieve the operation and performance required by this specification shall be incorporated or furnished even though such feature or item is not specifically defined or described herein. The contractor shall provide all services and materials necessary to prepare, reproduce and provide engineering analyses, reports, instruction books, and other documentation as specified herein.

The CD-2 equipment shall accept the specified input signals and shall meet the specified requirements. The contractor shall be responsible for the detailed design of the circuitry in the CD-2 which receives signals from and provides signals to the equipment with which it is to be interconnected, subject to the limitations contained herein. No modification of the interconnecting equipment or its software (including that at the using FAA facilities) shall be required or permitted to accommodate installation and operation of the CD-Z. Upon receipt of a specific request from the contractor, the Government will furnish the contractor any technical information which it has or can reasonably obtain, and which is necessary to allow the contractor to meet these interface requirements. The contractor # shall coordinate its activities in meeting these requirements with the # Government's Contracting Officer.

From time to time, the Government will require the contractor to conduct and participate in conferences with representatives of the Government and other contractors as appropriate. In addition to the continuing coordination with the resident Government personnel, the contractor shall participate in meetings and conferences scheduled by the Government to review and discuss the technical and program management aspects of the CD-Z acquisition program. These meetings will be held as required, during which the contractor shall state and explain the current status and plans for the design, production, and testing of the CD-2 and related equipment, documentation, and services.

3.1.1 Operational equipment to be furnished by the contractor.- The CD-2 shall be furnished in up to four configurations as required by the contract.

3.1.1.1 CD-2A.- The CD-2A shall be the FAA configuration of the CD-2 which provides data from long-range search and beacon radar equipment. It shall consist of the following modules and installation materials:

(a> Beacon Target Extractor (3.4.3.1.1) (two each)
(b) Search Target Extractor (3.4.3.1.2) (two each)
(c) Maintenance Console (3.4.3.1.4) (one each)
(d) Control and Interface Module (3.4.3.1.3) (two each)
(e) Installation Material and Cables (3.10.1)(one lot)

3.1.1.2 CD-2B.- The CD-2B shall be the FAA configuration of the CD-2 which provides data from long-range beacon radar equipment. It shall consist of the following modules and installation materials:

(a) Beacon Target Extractor (3.4.3.1.1) (two each)
(b) Maintenance Console (3.4.3.1.4) (one each)
(c) Control and Interface Module (3.4.3.1.3) (two each)
, (d) Installation Materials and Cables (3.10.1)(one lot)

3.1.1.3 CD-2C.- The CD-2C shall be the common configuration of the CD-2 which provides data from long-range search and beacon radar equipment, as well as collocated military equipment, to both FAA and U.S. Air Force (USAF) user s. It shall consist of the following modules and installation materials:

(a) Beacon Traget Extractor (3.4.3.1.1) (two each)
(b) Search Target Extractor (3.4.3.1.2) (two each)
(c) Maintenance Console (3.4.3.1.4) (one each)
(d) Control and Interface Module (3.4.3.1.3) (two each)
(e) Military Interface Group (3.4.3.1.5) (one each)
(f) Installation Material and Cables (3.10.1) (one lot)

3.1.1.4 CD-2D.- The CD-2D shall be the FAA configuration of the CD-2 which provides data from terminal (short-range) radar and beacon equipment. It shall consist of the following modules and installation materials:

(a) Beacon Target Extractor (3.4.3.1.1) (two each)
(b) Search Target Extractor (3.4.3.1.2) (two each)
(c) Maintenance Console (3.4.3.1.4) (one each)
(d) Control and Interface Module (3.4.3.1.3) (two each)
(e) Installation Materials and Cables (3.10.1) (one lot)

3.1.2 Support equipment to be furnished by the contractor as required by the contract.-

,.(a) Circuit Card Assembly Test Set (3.6.3.1)
(b) Plug-in Assembly Extender (3.6.3.2)
(c) Program Development Set (3.6.3.3)
(d) Input Simulator (3.6.3.5)
(e) Special Tools and Ancillary Items (3.6.3.4)

3.1.3 Documentation to be furnished by the contractor as required by the contract.-

3.1.3.1 System documentation.-

(a) Management Reports (3.12.1.1)
(b) System Design Data (3.12.1.2)
(c) Qualification and Acceptance Test Plan (3.12.1.3)
(d) Equipment and Computer Program Test Procedures (3.12.1.4)
(e) Test Reports (3.12.1.5)
(f) Site Preparation Reports (3.12.1.6)
(g) Installation Documents (3.12.1.7)
(h) As-Built Installation Drawings (3.12.1.8)
(i) Interface Control Documents (3.12.1.9)
(j) NAS Integration Test Procedures (3.12.1.10)
(k) Electranagnetic Interference Control Plan (3.12.1.11)

3.1.3.2 Hardware documentation.-

(a) Reliability and Maintainability Reports (3.12.2.1)
(b) Equipment Instruction Books (3.12.2.2)
(c) Drawings and Technical Memoranda (3.12.2.3)
(d) Provisioning Technical Documentation (3.12.2.4)

3.i.3.3, Software documentation.-

(a) Operational Program Documentation (3.12.3.1)
(b) Support Program Documentation (3.12.3.2)

The CD-2 shall include provisions for formatting and buffering the digital messages for transmission over communication lines to the appropriate remote users. In addition to these basic functions, the CD-2 shall, when required by the contract, perform air defense functions (3.4.3.1.5) as follows:

(a) Processing of height request and reply data

(b) Processing of Mode 4 data

(c) Processing and transmission of video and target data to local and remote USAF users respectively

The CD-2 shall incorporate self-testing features, including generation of fixed and moving internal test targets, and external test target triggers. The primary operator interface with the CD-2 shall be via the maintenance console. Operation, control, and diagnosis of the CD-2 shall be initiated, displayed, and verified at the console. The CD-2 shall be designed and constructed to permit addition or deletion of major modules in the field without significant effort in the event of a change in the digitizer requirements at a given site (3.4). Sufficient space shall be provided within the CD-2 cabinets to incorporate future growth of the CD-2 itself (3.4.1.8) as well as the addition of processors to perform a portion of the functions of the planned future radar sensors (3.4.3).

3.3 Environmental requirements.- The CD-2 will be operated at fixed, ground-based radar sites located throughout the-entire United States. Some locations will be remote, rugged facilities with locally generated power. On occasion, the CD-2's radar site may be unmanned for a period of time during normal operation. Other sites will be near major population centers or in areas subject to electrical "brownouts" or other afflictions. The aircraft population within the associated radar's coverage may vary from zero to many hundred. Similarly, a single major storm system may entirely occupy the radar's coverage area. In addition, the radars will likely provide some spurious data which do not represent the desired weather or target information. The design of the CD-2 shall be such that the required performance is achieved over the environmental conditions specified in the following paragraphs, unless specific exemptions are granted elsewhere in this specification.

3.3.1 Aircraft and radar environments.-

3.3.1.1 Aircraft density distribution.- The CD-2 will be operated in an air traffic environment which contains wide variations in aircraft population and the distribution of that population. The number of aircraft may vary from zero to the maxima listed below as a function of.time or antenna azimuth or both:

(a) Steady-state maximum:	800 aircraft within the site's coverage
(b) Large sector peak:	50 aircraft (25 for the CD-2D) in each of eight contiguous 11.25 degree sectors

(c) Small sector peak:	20 aircraft in each of three contiguous 1.2 degree sectors
(d) Sweep peak:	60 aircraft replies or returns in a single radar sweep, not including replies or returns from fruit or clutter
(e) Range distribution peak:	4 aircraft within 4.5 miles in slant range, not necessarily unifonnly distributed

3.3.1.2 Aircraft characteristics.- The major attributes and characteristics of the aircraft responses provided to the CD-2 by the associated radar equipment are described in the following paragraphs.

3.3.1.2.1 Beacon transponder replies.- Aircraft transponders now in use have a variety of capabilities. A given transponder may respond to Mode 3/A only, Modes 3/A and C, Modes 3/A and 2, Modes 3/A,2, and C, Modes 3/A,2,C and 4, or Mode 4 only. Future civil transponders may be required to respond to Modes 3/A and C at a minimum. A properly operating transponder on an aircraft which is within the beacon radar's normal coverage may, on occasion, fail to respond to a particular interrogation. Among the reasons for this characteristic of the beacon system are aircraft maneuvers, transponder deadtime because of another interrogation, and transponder lockout because of an excessive number of interrogations. These effects *cause* the probability of an aircraft reply to a given interrogation to be less than unity. This probability is termed the round reliability and shall be assumed to be 0.76 at the input to the CD-2 for all performance requirements specified in 3.4.1. Round reliability shall refer only to complete reply trains (24 microseconds) and the missing replies shall be assumed to be uniformly distributed within each aircraft's sequence of replies.

3.3.1.2.2 Aircraft types.- The aircraft targets to be detected and reported by the CD-2 will vary greatly in size and performance. Very slowly moving targets as well as fast, highly-maneuverable aircraft will be in the radar's coverage. The target size can vary from that of a dirigible to that of a very small Military fighter or light aircraft.

3.3.1.3 Beacon fruit rates.- The aircraft's beacon transponder often radrates a reply in response to an interrogation from another ground or airborne beacon radar interrogator. These fruit replies are not in response to the local CD-2's beacon radar's interrogations and, hence, can be a major source of interference with the desired replies. Further, the fruit replies can arrive at any antenna azimuth via the beacon antenna's sidelobes. They 'can also arrive at any range because, generally, they are asynchronous with respect to the CD-2's beacon radar. The number of' fruit replies may vary from zero to the maxima listed below as a function of time or antenna azimuth or both (approximate random and uniform distribution within these constraints shall be assumed):

(a) Steady-state maximum:	20,000 fruit replies per second
(b) 180° sector peak:	40,000 fruit replies per second for antenna scan times of 3 to 15 seconds inclusive

3.3.1.4 Spurious search radar returns.- The CD-2 will be operated with search radar videos which, in addition to the desired target and weather information, will also at times contain undesired data which should not be reported. The following paragraphs describe some of the types of undesired data which may be present in one or both of the'radar videos.

3.3.1.4.1 Ground clutter.- Returns from the terrain surrounding the radar site will vary from site to site and may, under conditions of ducting or anomalous propagation (AP), extend to the full range of the radar. The strength of the ground clutter may exceed 60 dB above the weakest signal detectable by the radar's receiver. Generally, the ground clutter will have a range extent or azimuth extent or both which are greater than that of an aircraft return.

3.3.1.4.2 Clutter residue.- The radar's moving target indicator (mti) circuitry generally has the ability to reduce the amplitude of fixed (ground) clutter by 20 to 30 dB and precipitation clutter by a somewhat smaller amount . Accordingly, sane residue from the stronger clutter returns may be present in the (mti) video. The rain clutter will be partially correlated from one sweep to the next.

3.3.1.4.3 Receiver noise.- Those radar receivers without intermediate-frequency sensitivity time control or video quantizers will present the CD-2 with videos in which there is a relatively constant level of thermal noise from the initial amplifier stages of the receiver (refer to 3.4.2.1.1 and 3.4.2.1.2). However, during sunrise and sunset periods, solar energy in the radio-frequency spectrum can cause the radar video noise to double in amplitude as the antenna scans past tke sun. Receivers (such an the ATCBI-3) with intermediate-frequency sensitivity time control will have a noise level which varies from nearly zero to the normal thermal noise level during the sweep as-a function of range, Quantized videos will have a negligibly small noise level.

3.3.1.4.4 Electronic radio frequency interference.- The radar receiver may receive via the antenna, and provide to the CD-2, returns caused by radiation of other transmitters at frequencies which are within the receiver's bandpass. Sources may include satellite communication links, adjacent radars, and electronic countermeasures. The interference may last only a few microseconds or may be nearly continuous for a portion of the antenna scan.

3.3.2 Service conditions.- The CD-Z shall be designed to meet the service conditions described in the following paragraphs.

3.3.2.1 Operating environment.- The CD-Z and its supporting equipment shall meet all functional and performance requirements specified herein under the environmental conditions of FAA-G-Zl00/lb, paragraph 1-3.2.23(b) for envirowent II, in continuous., unattended duty at altitudes from sea level to 12,000 feet (3700 m) above sea level. The standard design center value for ambient temperature shall be +30° Celsius (C).

3.3.2.1.1 Operating in extremes of climate.- The equipment shall be designed for continuous operation within the environmental conditions specified in 3.3.2.1. The contractor shall provide information in the equipment's instruction book as to what measures must be taken to operate the equipment under extreme conditions (outside of those in 3.3.2.1) which may be encountered in any area of the United States or its possessions. This requirement is not subject to verification by testing, but directs attention to the design, quality of materials, and workmanship required.

3.3.2.2 Operational electrical conditions.-- The CD-2 and its supporting equipment shall be designed using the following design center values and shall meet all functional and performance requirements specified herein when operating from a primary power source with the following service condition range values:

Source Parameter	Service Condition Range
120V design center, single phase	102 to 138V
208V design center, three phase	177 to 239v
60 Hz design center frequency	47 to 63 Hz

Except as provided in paragraph 3.4.3.1.5.3.3.3 herein, the CD-2 shall use three-phase power and its supporting equipment (3.6.3) shall use single-phase power.

3.3.2.2.1 Electrical transients.- The CD-2 shall not output false operational or maintenance signals as the result of turning on or off the off-line channel or any module (3.1.1) in the on-line channel. The CD-2 and all supporting equipment shall meet all functional and performance requirements, and the CD-2 operational equipment shall not output any such false data during operation under the environmental conditions listed in FAA-G-2100/1, paragraphs 1-3.3.1, 1-3.3.1.1, l-3.3.4, and l-3.3.5 as modified below:

(a) Paragraph 1-3.3.1 is qualified by defining the "slowly varying!' ac line voltage as changing at the rate of 5.0V/s or less.

(b) Paragraph l-3.3.1 is qualified by defining the "slowly varying" ac line frequency as changing at the rate of 1.0 Hz/s or less.

(c) Paragraph 1-3.3.4's transient voltage peak value is modified by changing "120%" to "150%"' in two places. In addition, the last sentence is modified such that the operational CD-2 equipment shall not shut down as a result of this peak over-voltage transient. Off-line CD-2 maintenance equipment may shut down as the result of such a transient. If shutdown occurs, autanatic restoral of the previous operating conditions and mode shall occur at the conclusion of the transient. The CD-2 and all supporting equipment shall also meet the surge protection requirements of 3.5.1 herein.

(d) Paragraph l-3.3.5 is modified to require the operational CD-2 equipment to operate correctly with no shutdown in the presence of partial or complete losses of the line voltage or voltages for up to 100 milliseconds at a time, recurring no more often than once every 68 seconds. In the event of loss of voltage for longer than 100 ms 'or momentary losses more often than once every 60 seconds, the CD-2 may shut down. For all such shutdowns, including normal turn-off or intentional interruption of the primary power, with durations equal to or less than 48 continuous hours or totalling 96 hours or less in any 168-hour period, the CD-2 operational equipment shall come up in the same operational state and condition as it was at the moment of the interruption. The restoral of operation shall be automatic if the shutdown was the result of an interruption in the main ac power source. The off-line CD-2 maintenance equipment shall, at a minimum, meet the requirements of the unmodified paragraph l-3.3.5.

3.3.2.2.2 Startup surges.- The peak inrush current demanded by any CD-2 configuration from the primary power source shall not exceed three times its normal peak operating current with all modules functioning. The duration of the inrush condition shall not exceed four seconds, as measured from application of power to the time at which the current reaches or falls below the peak operating value.

3.3.2.2.3 Power consumption.- The total power consumed by each dual-channel CD-2 configuration as delivered to the Government shall not exceed the following limits:

(a) CD-2A, 3 kVA
(b) CD-2B, 2 kVA
(c) CD-2C, 3 kVA
(d) CD-2D, 3 kVA

This consumption shall include all operational and maintenance equipment loads and exclude the convenience output loads. In no equipment or module shall its power factor be less than 0.85.

3.3.2.3 Nonoperating environment.- The CD-2 and its supporting equipment shall meet all functional and performance requirements specified herein when returned to the conditions of 3.3.2.1 and 3.3.2.2 after exposure to the following conditions during transit or storage:

(a)	Ambient temperature	-55° to $+65^{\circ}$ C
(b)	Altitude	2,000 feet (600 m) below, to 15,000 feet (4,600 m) above mean sea level
(c)	Shock	That encountered in a square landing from a free fall of at least 6.0 inches (15 cm)
(d)	Vibration	That encountered in a normal factory environment

When so required by the contract and necessary to meet these requirements, a transit case shall be provided with the equipment and fully described in the equipment instruction book (3.12.2.2). The packaged equipment must be able to be air transported in any orientation.

3.4 Functional requirements.- The CD-2 shall be functionally-modular, programmable radar data processor which can be reconfigured in the field to meet a variety of user requirements. The minimum c&figuration shall be the CD-2B (beacon-only version). With the installation of additional equipment, the CD-2B shall be able to be converted in the field to a CD-2A (long--range) or a CD-2D (terminal). The CD-2A shall be able to accept the field installation of the Military Interface Croup (MIG) and, thus, become a joint-use CD-2C. This specific reconfiguration shall require no more than 30 minutes of downtime or other degradation of the output data being provided by an operational, commissioned CD-2A.

The target detection, weather measurement, message formatting, display, and self-test and diagnostic functions shall be performed in small digital microprocessors. These functions shall be defined and implemented by appropriate programming of each microprocessor. This programming shall reside in a programmable read-only memory in the microprocessor and shall be able to be fully modified by the Government at its depot or engineering modification facilities. Calibration, control, and diagnosis of both channels of the CD-2 shall be able to be accomplished by controlling these processing elements from data entry facilities on the maintenance display. Reprogramming of the microyrocesscrs to alter any of their functions shall be able to be accomplished by exchanging old memory circuits with new PROMs.

The CD-2 shall be designed to provide spare space for growth and future modifications (3.4.1.8). In addition, the CD-2 shall accommodate future radar sensor modifications to the extent required in 3.4.3. These sensor modifications shall be able to be accommodated by the installation of new processing modules in the CD-2 cabinets, minor rewiring of the CD-2 (to provide input and output connections, etc,), and reprogramming of the CD,-2's microprocessors to perform the data manipulations required in the new applications.

3.4.1 Overall performance requirements.- The following paragraphs specify the general system-level performance requirements for the initial, delivered version of the CD-2 (and its supporting equipment where the requirements are applicable, e.g., service life). These requirements shall be met using simulated or other repeatable (e.g., taped) radar input signals as prescribed by the approved test plan (3.12.1.3). It is not the intent of this paragraph and its subparagraphs to require the CD-2 to accommodate timing errors or other faults in the associated radar equipment which are not specifically identified in 3.3 or 3.4.2 herein.

3.4.1.1 Coverage.- The CD-2 shall be able to detect and report aircraft targets and weather contours for a full 360 degrees and to a maximum range of at least 250.0 nautical miles (nmi) except where limited by the pulse repetition frequency (prf) of the associated search or beacon radar. Where limited by the radar's prf, the CD-2's maximum range shall be within 10 microseconds of the maximum permitted by the prf. The CD-2's search and beacon target extractors shall be able to independently accommodate their respective radars' prfs. The search and beacon radars may or may not have the same prf, and they may both be unstaggered, one staggered and one not, both staggered together, or both staggering independently.

3.4.1.2 Target detection.- The CD-2's target extractors shall detect and report aircraft returns with at least the performance specified below. Unless otherwise specified, these requirements shall be-met over the full range of the extractors with any combination of the aircraft and radar environments described in 3.3.1 with the sole exception of the electronic radio frequency interference requirements of 3.3.1.4.4.

3.4.1.2.1 Beacon.- Unless otherwise specified, the CD-2's beacon target extractor (BTE) shall meet the following requirements for beacon target returns consisting of replies with the specified round reliability (3.3.1.2.1) from a transponder with capabilities in Modes 2, 3A, and C which is in the presence of the fruit density specified in the table below. The number of interrogations on any particular mode shall vary from a minimum of 4 to a maximum of 23. A mode interlace of 3A,C,2 shall be used. Further, the BTE shall be configured to use only Mode 3 replies in the target detection process (3.4.3.1.1.2.1) unless otherwise specified herein. Antenna and scanning modulation effects shall be neglected. The fruit rates in the following table shall be used to establish the beacon performance specified in the applicable paragraph. At least eight of the 14 possible information code bits shall be set in each of the fruit replies.

Beacon Performance Requirement Paragraph	Applicable Fruit Rate Description Paragraph
3.4.1.2.1.1	3.3.1.3 (a)
3.4.1.2.1.2	3.3.1.3 (a)
3.4.1.2.1.3	No fruit rate at all
3.4.1.2.1.4	3.3.1.3 (b)
3.4.1.2.1.5	3.3.1.3 (b)
3.4.1.2.1.6	3.3.1.3 (b)
3.4.1.2.1.7	3.3.1.3 (a)
3.4.1.2.1.8	3.3.1.3 (a)

3.4.1.2.1.1 Probability of detection.- The minimum acceptable probability of detection (P_d) shall be as follows, subject to the false report criteria specified in 3.4.1.2.1.8:

Interrogations Per Mode	P_d Using Mode 3 Only	P_d Using Both Mode 3 and Mode C
4	not applicable	0.90
6	0.70	0.97
8	0.90	0.99
11	0.97	0.995
15	0.99	0.998
23	0.995	0.999

3.4.1.2.1.2 Range resolution.- At least 95 percent of the time, the BTE shall resolve two detected, stationary and identical, 11 hit-per-mode noninterfering targets with the same center azimuth if they are separated (in slant range) by 0.05 to 0.5 nmi inclusive. The targets shall be resolved at least 99.9 percent of the time when they are separated by more than 0.5 nmi. Any two detected 11 hit-per-mode targets which have an average range separation of 5 nmi or less, have the same center azimuth, do not mutually interfere on Mode 3/A radar sweeps, have differing Mode 3/A codes (including special position identifier (SPI) and X pulses), and have any relative radial velocity which is consistent with the mutual noninterference requirement but is less than 700 knots, shall be resolved at least 99.5 percent of the time.

3.4.1.2.1.3 Azimuth resolution.- At least 95 percent of the time, the BTE shall resolve two detected, stationary and identical targets which are within 0.05 nmi of each other in slant range and which are separated by an absence of beacon replies (with decoded ranges which are within that 0.05 nmi interval) for 18 radar sweeps or the number of Mode 3 replies in each target, whichever is greater. Two detected 11 hit-per-mode, non-interfering, stationary or moving targets which are within 0.05 nmi of each other in slant range and have at least one distinguishing characteristic shall be resolved at least 99.5 percent of the time. This requirement shall apply up to and including the condition of contiguousness (adjacent in azimuth with no intervening sweeps,) Distinguishing characteristics
shall include different Mode 2 or Mode 3/A codes (including X pulses), Mode C altitudes that differ by more than 100 feet, a Military emergency # code train versus a normal reply or nonresponse of one aircraft to an interrogation mode to which the second aircraft responds.

(Blank)

3.4.1.2.1.4 *Range* accuracy. - The BTE shall. report at least 98 percent of all detected stationary targets at their correct slant ranges, plus or minus 1/32 nmi. At least 95 percent of all moving targets with radial velocities of 700 knots or less shall be reported at their correct (average) slant ranges, plus or minus 1/16 *nmi.*

3.4.1.2.1.5 Azimuth accuracy.- The BTE shall report at least 80 percent of all detected stationary targets at their correct azimuths, plus or minus 0.176 degrees, when the associated beacon radar is interrogating at 10 times per degree of the antenna's rotation.

3.4.1.2.1.6 Split reports.- The BTE shall not generate more than one beacon target report from a single aircraft's beacon reply sequence which is in response to interrogations from the associated beacon radar. This shall apply to any aircraft with a velocity (in any direction) of 1,000 knots or less, providing that it has a discrete Mode 3/A code. For aircraft without the discrete Mode 3/A capability, no more than 1.0 percent of their reports shall be split reports.

3.4.1.2.1.7 Code validation and accuracy.- The BTE shall validate (3.4.3.1.1.2.2) the beacon code information as contained in the aircraft's reply for Modes 2, 3/A, and C (including SPI and X pulses) at least 95 percent of the time when the number of actual hits received per mode is five or greater. When the actual number of hits per mode is 11 or more, the codes shall be validated at least 98 percent of the time. Validation of incorrect codes (due to fruit or other *causes)* shall *occur* less than 1.0 percent of the time. The validated codes shal.l be accurate at least 99 times out of 100.

3.4.1.2.X.8 False reports.'- The BTE shall produce no more than four false target reports per scan. This is an overall requirement and shall be met in the steady-state fruit condition of 3.3.1.3(a) herein, with any or all target conditions permitted herein, other than a mix of aircraft in which the number of nondiscrete Mode 3/A aircraft exceeds 30 percent of the total of beacon-equipped aircraft. In addition, the BTE shall detect and report civil emergency (Mode 3/A codes 7500, 7600, and 7700) and Military emergency (four code trains in trail) in a manner so that no more than 1 false emergency report is reported per 48 hours, averaged over a 30-day period during these same conditions.

3.4.1.2.2 Search.- The CD-2's search target extractor (STE) shall meet the following requirements using a combination of moving target indicator (mti) and normal or logarithmic-normal (log) videos from any of the primary radar systems listed in Table I as specified herein. The radar shall be assumed to have input signals with the characteristics described in 3.4.2.1.1 for long-range radars or 3.4.2.1.2 for terminal radars. Any antenna or scanning modulation effects shall be neglected.

The number of echoes from a target (the target's runlength) may vary from 10 to 50 depending upon target strength (range and size, etc.) and radar parameters (prf, scan time, horizontal beamwidth, etc.). The pulsewidth of the echo from an aircraft target may vary from 0.70 to 15.0 microseconds depending in major part upon the pulsewidth of the transmitted pulse; however, it may also be affected by the bandpass of the receiver or time constant of the video quantizer. The expected pulsewidth will, thus, he a unique value for each radar facility.

3.4.1.2.2.1 Probability of detection.- For linear search videos (mti and normal), the maximum signal-to-noise ratio (SNR), expressed in dB, for the indicated probability of detection (P_d) for a target with the expected. pulsewidth and the following runlengths in an environment of receiver noise only, shall be as follows, while meeting the false alarm criteria specified in 3.4.1.2.2.7:

Run Length	P_d = 0.5	P_d = 0.7	P_d = 0.9
10	7.0	8.5	9.5
20	4.5	6.0	7.0
30	3.5	4.5	5.0

These requirements shall also be met in clutter environments for targets with signal-to-clutter ratios equal to the SNR values above plus 2.0 dB. For this requirement, clutter is defined as a distinct, increased dc level or effective noise amplitude in the input video which begins ahead of the target pulse by at least the expected target pulsewidth, continues at least the expected target pulsewidth after the target, and which exceeds the wfdth of the expected target pulse by at least ten times.

For the purpose of assessing the probability of detection for log video with characteristics as described in 3.4.2.1.1.1, the following calculation and measurement technique shall apply: The noise or the sum of noise and clutter shall be normalized to the same value and antilogged. The probabilities of detection specified above shall then apply. Thus, a target that reached 2.60 volts for at least 20 radar sweeps in an environment where the sum of clutter and noise was 2.0 volts (and the other clutter definitions above were met) shall be detected with' a probability of at least 0.90.

3.4.1.2.2.2 Range resolution.- At least 90 percent of the time, the STE shall resolve two detected, stationary and identical search targets with runlengths of 25 hits and the same center azimuth, and which occur in clear air (no clutter) when there is an absence of returns between the two targets for at least 1.25 times the expected target pulsewidth at the input to the CD-2. The two targets shall be resolved at least 99.9 percent of the time when they are separated by five times the expected target pulsewidth or more.

3.4.1.2.2.3 Azimuth resolution.- At least 90 percent of the time, the STE shall resolve two detected, stationary and identical targets which are within 0.05 nmi of each other in slant range and which are separated by an absence of hits for six radar sweeps or one-half of the targets' runlengths, whichever is greater.

3.4.1.2.2.4 Range accuracy.- The STE shall report 98 percent of all detected stationary targets at their correct slant ranges, with tolerances of plus or minus 1/16 nmi when the sample period of the analog-to-digital converters (3.4.3.1.2.1) is 750 nanoseconds or less, and plus or minus 1/8 nmi when their sample period is 1.4 microseconds or less. At least 90 percent of all moving targets with radial velocities of 700 knots or less shall be reported at their correct slant ranges, subject to these same tolerances.

3.4.1.2.2.5 Azimuth accuracy.- The STE shall report at least 95 percent of all detected stationary targets at their correct azimuths, plus or minus 0,176 degrees, when the associated search radar is transmitting at 10 times per degree of the antenna's rotation.

3.4.1.2.2.6 Split reports.- The STE shall not generate more than one search target report from a single aircraft's echo sequence providing that the pulsewidth of the echoes does not exceed two-and-one-half times the expected target pulsewidth and that there is not an absence of hits within 1/32 nmi of the last hit for more than four consecutive radar sweeps.

3.4.1.2.2.7 False reports.- The STE shall demonstrate a false alarm rate in clear air (receiver noise only) of no more than $1x10^{-6}$ or no more than five false reports per scan, whichever is less restrictive. The total false alarm rate in any mixture of clear air and ground or weather clutter areas, as determined by the automatic target video crossover sensor (3.4.3.1.2.2.2.1) shall be 5×10^{-5} or less.

3.4.1.3 Weather detection.- The STE, in addition to detecting aircraft targets, shall detect and report iso-intensity contours caused by weather within the coverage area of the associated search radar.

3.4.1.3.1 Weather contour accuracy.- The STE shall provide weather messages based upon the search video returns which exceed or are within 0.5 dB of the selected reporting threshold. A simulated storm area of any symmetrical shape at any location partially or wholly within the STE's coverage shall be reported at the correct range and azimuth, within one-half of the respective selected resolution values.

3.4.1.3.2 False weather contours.- The STE shall not report an aircraft or an aircraft-type echo sequence as weather, regardless of the intensity of the returns. Similarly, fixed ground clutter, as determined by the automatic weather video crossover sensor (3.4.3.1.2.2.3.3), shall not be a cause of false weather contour reports.

3.4.1.4 Capacity.- The CD-2 shall be able to accommodate any combination of situations permitted in 3.3.1 while simultaneously making available weather contours for two intensities over the full coverage area. The only permissible overload situation is that resulting from the limitations of the output data transmission equipment. Regardless of possible output channel data rate limitations, the final output data shall be available on the system data bus within 400 milliseconds following completion of the appropriate input data.

3.4.1.5 Equipment configuration.- The CD-2 shall be physically, as well as functionally, grouped into modules. The modules shall be largely self-contained with minimal connection and reliance upon adjacent modules. Each module as defined in 3.1.1 shall have its own diagnostic and communication capabilities. Modules within a channel as well as the two channels themselves shall be independent such that an internal failure will not affect operation other than by the loss of the functions of the failed module or channel.

Although the CIM is specified as a separate module, its functions may physically reside in another module's card cage or similar packaging arrangement. For instance, the radar interface, test target generator, bus controller, status monitor and modem adapter could, at the contractor's option, be implemented with the BTE since the BTE is present in all CD-2 configurations, '(Implementation of these functions in the maintenance console is not acceptable because the MC is largely an off-line unit.) Unnecessary functions, such as the search portion of the radar interface and test target generator in the CD-2B configuration, shall be omitted to the greatest extent possible in each type of CD-2. Unpopulated but wired card locations and connectors is an acceptable method of meeting this requirement, provided that the necessary procedures and mechanisms for achieving full operation of the remaining functions are incorporated into the design. For example, the status monitor and bus controller functions must be adapted for correct operation without an STE or a MIG in the CD-2B.

It is also permissible to use this technique in physically packaging the STE and the MIG: they could reside in the BTE's card radk. However, in no way does this blurring of the physical boundaries between these or any other modules alter the requirements for their functions or functional independence. The STE and MIG modules must be physically removable. They and the MC shall each have separate, independent power supplies. The BTE, together with the colocated CIM functions in the event that the contractor opts for such combined implementation of the CIM and the BTE, shall have its own power supplies. No power supplies shall be common to redundant modules in the two channels (e.g., STE, BTE, CIM).

3.4.1.6 Operating modes.- The CD-2 shall be capable of operating in at 'least the following major modes:

(a) Channel one on-line

(b) Channel two on-line

(c) Neither channel on-line

(d) Degraded channel operation

  (1) No search and weather data

  (2) No beacon data

  (3) No military functions

(e) Automatic channel change in case of fault

3.4.1.7 Service life.- The CD-2 shall be designed and constructed to have a planned service life of at least 20 years, operating 24 hours per day, 7 days per week, with the prescribed maintenance and replacement of parts. This requirement is not subject to tests but directs attention to the quality of materials and workmanship required, especially with regard to moving parts. An appropriate list of preventive maintenance and replacement tasks shall be prepared as required in 3.9.4.3.5.

3.4.1.8 General growth requirements.- In addition to the requirements to accommodate future sensor improvements (3.4.3), the CD-2 shall provide sufficient capacities and space to permit moderate changes in its application, interfaces, and abilities. The data blocks used in each real-time, buffer or other memory to describe each target or weather measurement at any processing stage shall each have unused, spare bits to permit the inclusion of additional information in each such data block as future needs may require. The number of spare bits shall be equal to at least 10 percent of the usable word length or four bits, whichever is greater. Each spare bit shall be individually accessible and addressable, requiring only the appropriate software modifications to initiate its use. The size or capacity of each memory shall be at least 150 percent of the size required to meet the requirements of 3.4.1.4. No microprocessor or other processing element shall be working at more than 85 percent of its maximum capacity under
the conditions of 3.4.1.4. Each dual-channel CD-2 system including its supporting equipment shall have sufficient space distributed throughout the modules for the future addition of circuit card assemblies (CCA) equal to at least 10 percent of the cards in the original system. Each such spare location shall be provided with an installed, but unwired, card # connector. Each power supply shall be able to continuously supply at least 150 percent of the load drawn in its initial, as-delivered configuration.

3.4.2 Interface requirements.- The CD-2 shall be designed and built to interface and operate correctly with the radar and data transmission equipment currently existing at Government radar facilities. In addition, certain interfaces which are internal to the CD-2 shall be standardized to provide required module flexibility (3.4.2.2).

3.4.2.1 External equipment interfaces and formats.- The CD--2 shall be designed and built-to meet the performance requirements specified in 3.4.1 with the data received from and provided to the external equipment using the formats specified in the following paragraphs, without modification to that equipment or their interface requirements. Signal conditioning and driver capabilities shall be provided as necessary to meet these requirements over interconnecting cables of at least 300 feet in length, unless otherwise specified. Isolation which is adequate to prevent damage to, or failure of, the CD-2 from occurring as the result of open or short
circuits or the application of spurious voltages of up to ±100V (from sour-e impedances as low as 1,000 ohms) on any or all of the CD-2 interconnecting # cables shall be provided. Unless otherwise specified, the interface cabling shall consist of coaxial cables with the correct characteristic impedance for the signal it is to carry.

3.4.2.1.1 Long-range radar equipment.- The CD-2A and CD-2C shall operate correctly wath any of the long-range radars listed in Table I. Figure 2 indicates the applicable interface signals, the characteristics of which are summarized in the following subparagraphs.

3.4.2.1.1.1 Input videos.- The search videos will consist of two real-time, analog or single-brt-quantized, serial video data streams, One wil.l come from a moving target indicator (mti) receiver and the other from a normal receiver. The analog normal video may have a linear or a logarithmic (log) amplitude characteristic. The log video will use a curve of approximately 15 dB per volt, with up to 80 dB of dynamic range extending from approximately 0.3V into the noise to 4.0V or more. Both videos will have been subjected to radio-frequency sensitivity time control (stc) and will have a nominal 75-ohm characteristic impedance. Neither video will have been processed by fast time constant (ftc) clutter elimination circuitry. To preserve the available information, the videos will have the maximum dynamic range and have as little limiting as is possible. The videos will be synchronized in time with the radar pretrigger (3.4.2.1.1.2) but may be offset from each other by a constant amount of up to 2.0 microseconds. The nominal and extreme characteristics of the analog videos will be as follows:

	Amplitude	Noise	Baseline	SNR
(a) MTI (nominal)	+4.0V	+0.5V	0.0V	8:1
(b) MTI (extreme)	+1.0V to +6.0V	+0.25 to +1.0V	-1.0 to +1.0V	1.3:1 to 10:1
(c) Normal (nom)	+4.0V	+0.5V	o.ov	8:1
(d) Normal (ext)	+2.0 to +7.0V	+0.25 to +1.0	-1.0 to +1.0V	2:1 to 10:1
(e) Log (nominal)	+4.0V	+0.5V	0.0V	8:1
(f) Log (extreme)	+2.0 to +6.0V	+0.25 to +1.0	-1.0 to +1.0V	2:1 to lo:i

(The amplitude and noise values listed above are average peak values.)

The log and normal videos will generally have the "dense" noise which is characteristic of thermal noise in linear receivers. However, the mti video's noise will often be more "sparse" or more widely distributed in time and it will vary more in amplitude over a period of a few tens of microseconds than the other video from the same radar. The spectral distribution and amplitude characteristics of the video noise, particularly for mti video, may vary widely, depending upon the radar receiver. In addition, the receiver's gain may slowly change; thus, the average peak amplitude of the noise may vary with time at a rate of 0.2 volts per minute or less.

Quantized videos will have the following characteristics:

	Nominal	Extreme
(a) Amplitude	+4.0V	+2.0 to +7.0V
(b) Baseline	o.ov	-1.0 to +1.0V
(c) Rise and (d) Fall Times	0.1 us	0.05 to 0.15 us
(e) Pulsewidth	2.0 us	0.8 to 12.5 us
(f) Impedance	75 ohms	70 to 80 ohms

3.4.2.1.1.2 Radar pretrigger.- The CD--2A and CD-2C shall accept a radar pretrigger which occurs at a-constant time before range zero of the next radar sweep. The trigger may occur from -130 to -10 microseconds with respect to radar range zero and will have a jitter of 0.5 microseconds or less. The prfs of the radars will vary from 240 to 380 pulses per second (p/s). In the stagger mode, the average prf will remain in this range. The nominal and extreme characteristics of the pre-trigger will be as follows:

	Nominal	Extreme
(a) Amplitude	+15V	+10 to +60V
(b) Baseline	o.ov	-1.5 to +1.5V
(c) Width	2.0 us	1.0 to 5.0 us
(d) Rise Time	0.1 us	0.5 us max
(e) Fall Time	0.1 us	0.6 us max
(f) Impedance	75 ohms	70 to 80 ohms

3.4.2.1.1.3 Antenna azimuth data.- All four configurations of the CD-2 shall accept azimuth data from two major sources as described in the following paragraphs.

3.4.2.1.1.3.1 Azimuth pulses.- The CD-2 shall accept antenna azimuth information in the form of two pulse signals. One signal will provide a pulse, denoted the azimuth reference pulse (ARP), at any single, constant, reference point in the antenna's rotation. The other signal will be a series of pulses which indicates how far beyond the reference point the antenna has rotated. Normally, there are 4,096 of these azimuth change pulses (ACP) equally spaced in a single revolution. However, the CD-2A shall also be able to accept improved ACPs (IACP) from a future azimuth pulse generator from which are provided 16,384 pulses per revolution of the antenna. The ACP and ARP signals may be provided to the CD-2 in a true pulse form or in a pseudo-sinewave form. The improved ACPs will be provided in a pulse form only. The signal characteristics for each type will be as follows:

	Nominal	Extremes
(a) Pulse Inputs		
(1) Amplitude	+15V	+10V to +60V
(2) Baseline	o.ov	-0.5V to +0.5V
(3) Width	1.0 us	0.5 to 50 us
(4) Rise Time	0.1 us	0.3 us max
(5) Fall Time	0.2 us	0.5 us max
(6) Impedance	75 ohms	70 to 80 ohms
(b) Sinewave Inputs		
(1) Amplitude	5V peak-to-peak	3.0 to 10.0V peak-to-peak
(2) Average value (baseline)	o.ov	-5.0V to +80V
(3) ACP frequency	4,096 per scan	4,096 per scan
(4) Impedance	75 ohms	70 to 80 ohms

The ARP for the sinewave input consists of a single cycle of a sinewave with the frequency of the ACP waveform. The ARP sinewave may be of either polarity.

The ACP pulse-to-pulse jitter will be 450 microseconds or less. The ARP pulse-to-pulse jitter will be within 20 percent of the ACP pulse interval. The ARP may occur anywhere in the ACP pulse interval.

3.4.2.1.1.3.2 Azimuth synchro.- In addition to ACP and ARP azimuth data, the CD-2 shall accept antenna azimuth data in the form of multi-speed synchro information. The synchro data provided to the CD-2A, CD-2B, or CD-2C will be 3-wire, l-speed and 36-speed rotor signals, and a 60 Hz phase reference signal from a synchro transmitter similar to Type 23CX6A as defined in MIL-S-20708. The CD-2 azimuth synchro interface wiring shall be no smaller than 20 AWG wire and it shall be in a shielded cable. The data provided to the CD-2D from terminal radars will be similar to that for the other CD-2 configurations except that the multi-speed synchro will' be IO-speed in lieu of the 36-speed device. The signal characteristics are as follows:

	Amplitude	Waveform	Number of Conductors
(a) l-speed synchro stator	0 to 90V ac	60 Hz sinewave	3
(b) Multi-speed synchro stator	0 to 90V ac	60 Hz sinewave	3
(c) Synchro reference	117V ac (nominal)	60 Hz sinewave	2
(d) Ground	o.ov	None	1

(The ground connection may not be provided to the CD-2D from the terminal radar.1

3.4.2.1.1.4 Radar test target pulse.- The CD-2A, CD-2C, and CD-2D shall provide a search test target pulse to trigger an external, Goverwent radar signal generator test set for testing the overall radar-digitizer system. The search test target pulse shall be generated as required by the test target generator within the control and interface module (3.4.3.1.3). It shall have a single output which may be switched between a continuously adjustable low amplitude and a fixed high amplitude. The switching and level adjusting shall be accomplished by simple internal means. The electrical characteristics of the output at the end of 300 feet of cable shall be as follows:

	Nominal	Extremes
# (a) Amplitude, high	+15V	+13.5 to 16.5 V
(b) Amplitude, low	+3.0 to 10.0V adjustable	±10% of nominal
(c) Baseline	o.ov	-0.25 to +0.25V
(d) Width	3.0 us	2.5 to 3.5 us
(e) Rise Time	0.05 us	0.1 us max
(f) Fall Time	0.05 us	0.1 us max
(g) Impedance	75 ohms	70 to 80 ohms

3.4.2.1.1.5 Radar status data.- The CD-2A, CD-2C, and CD-2D shall provide a ground (return) signal to, and accept status signals from, the radar monitoring equipment for the purpose of reporting the search radar's status to the remote facilities which use CD-2 data. Shielded wire which is no smaller than 20 AWG shall be used for this interface. At least eight status signals shall be accepted; active radar channel, polarization indicator, and six spares. Normally, the status signal will electrically consist of an open circuit or a contact closure (or its solid-state equivalent) which returns the CD-2's ground to the CD-2 on a particular status line. However, not all radar monitors will provide this electrical action. Accordingly, the CD-2 shall tolerate up to 0.5A of peak current on the ground line and shall correctly interpret the following voltages on the status lines:

Status Line Condition	Voltage
Low	-1.0 to +0.9V
High	+2.5V to +10V

3.4.2.1.2 Terminal radar equipment.- The CD-2D shall operate correctly with any of the terminal radars listed in Table I. Figure 3 indicates the applicable interface signals, the characteristics of which are summarized in the following subparagraphs.

3.4.2.1.2.1 Input videos.- The search videos provided to the CD-2D will consist of either two real-time analog video serial data streams or two real-time, ten-bit digital word streams representing the amplitude of the two videos. One video will come from an mti receiver and the other from a normal receiver. The normal video may have a linear or a logarithmic. amplitude characteristic.

The log video will use a curve of approximately 15 dB per volt, with up to 80 dB of dynamic range extending from approximately 0.3V into the noise to 4.0V or more. Both videos will have been subjected to radio-frequency stc. The analog videos will have a nominal 75-ohm characteristic impedance. The videos may or may not have been processed by ftc circuitry. To preserve the available information, the videos'will have the maximum dynamic range and have as little limiting as is possible. The two videos will be synchronized with the radar pretrigger (3.4.2.1.2.2) but may be offset from each other by a constant amount of up to 2.0 microseconds. The nominal and extreme characteristics of the analog videos will be as follows:

	Amplitude	Noise	Baseline	SNR
(a) MTI (nominal)	+4.0V	+0.5V	o.ov	8:1
(b) MTI (extreme)	+1.0 to +6.0V	+0.25 to +1.0V	-1 .0 to +1 .0V	1.3:1 to 10:1
(c) Normal (nom)	+4.0V	+0.5V	o.ov	8:1
(d) Normal (ext)	+2.0 to 7.0V	+0.25 to +1.0V	-1.0 to +1.0V	2:1 to 10:1
(e) Log (nominal)	+4.0V	+0.5V	0.0V	8:1
(f) Log (extreme)	+2.0 to +6.0V	+0.25 to +1.0V	-1.0 to +1.0V	2:1 to 10:1

(The amplitude and noise values listed above are average peak values.)

The log and normal videos will generally have the "dense" noise which is characteristic of thermal noise in linear receivers. However, the mti video's noise will often be more "sparse" or more widely distributed in time and it will vary more in amplitude over a few tens of microseconds than the other video from the same radar. The spectral distribution and amplitude characteristics of the video noise, particularly for mti video, may vary widely, depending on the radar receiver. In addition, the receiver's gain may slowly change; thus, the average peak amplitude of the noise may vary'with time at a rate of 0.2 volts per minute or less.

The digital words of video data will be clocked into the CD-2D at a rate of 1/16 nautical mile by a "sample valid" signal from the radar. The least # significant bit (LSB) of the word will represent approximately 8 mV. # The videos will generally be the digital equivalent of the analog videos described above. They will be provided on balanced-current, twisted pair transmission lines which are driven by type 75109 (or equivalent) integrated circuit drivers.

3.4.2.1.2.2 Radar pretrigger.- The CD-2D shall accept a radar pretrigger which occurs at a constant trme before range zero of the next radar sweep. The trigger may occur from -130 to -10 microseconds with respect to the radar range zero and will have a jitter of 0.5 microsecond or less. The prfs of the terminal radars will vary from 700 to 1250 p/s. In the stagger mode, the average prf will remain in this range. The electrical characteristics of the pretrigger will be the same as those of the long-range radar equipment (3.4.2.1.1.2).

3.4.2.1.2.3 Antenna azimuth data.- The CD-2D's azimuth input signals are described in 3.4.2.1.1.3.

3.4.2.1.2.4 Test target. pulse.- The CD-2D's requirements to provide a search test target pulse are specified in 3.4.2.1.1.4.

3.4.2.1.2.5 Radar status data.- The CD-2D's requirements to provide signals to and monitor -signals from the terminal radar monitor are specified in 3.4.2.1.1.5.

3.4.2.1.3 Beacon radar equipment.- All configurations of the CD-2 shall operate correctly with any of the beacon radar equipment listed in Table I. Figure 4 indicates the applicable interface signals, the characteristics of which are summarized in the following subparagraphs.

3.4.2.1.3.1 Input video.- The beacon video provided to the CD-2 will be either of two, real-time, serial video data streams: analog or single-bit quantized. Both will contain the aircraft code train replies. The analog video will be the output of a linear receiver and the quantized video will be from a similar source except that it will have been quantized in the beacon receiver. Both videos will have been realigned to remove the short stagger which may have been introduced in the beacon interrogator, but they may remain staggered as the result of external stagger requirements such as the search radar. In either instance, the videos will be synchronized with the beacon mode pair trigger (3.4.2.1.3.2). Both videos will have been subjected to the effects of gain time control (gtc) circuitry in the receiver (ahead of any quantizer). The nominal and extreme characteristics of the videos will be as follows:

	Nominal	Extreme
(a) Analog Video		
(1) Amplitude	+2.0V	+1.5 to +8V
(2) Noise	+0.5V	0.0 to +1.0V
(3) Baseline	o.ov	-1.0 to +1.0V
(4) SNR	4:1	1.5:1 to 1000:1
(5) Pulse Duration	0.45 us	0.05 to 2.0 us*
(6) Rise Time	0.1 us	0.05 to 0.2 us
(7) Fall Time	0.2 us	0.05 to 0.3 us
(8) Impedance	75 ohms	70 to 80 ohms
(b) Quantized Video		
(1) Amplitude	+2.0V	+1.0 to +8.0V
(2) Baseline	o.ov	-1.0 to +1.0V
(3) Pulse Duration	0.45 us	0.1 to 2.0 us *
(4) Rise Time	0.08 us	0.05 to 0.2 us
(5) Fall Time	0.15 us	0.05 to 0.3 us
(6) Impedance	75 ohms	70 to 80 ohms
(7) Noise	+0.1V	+0.2V max

*Note: The wider pulsewidths reflect the widths that may result from overlapped pulses in the replies from two or more aircraft. The width of noninterfering pulses will not exceed 0.60 microseconds.

The amplitude and noise values listed above are average peak values. The analog video's noise will be the "dense" noise characteristic of thermal noise in linear receivers. Because of the gtc action, it will increase with range from near zero at close range to the normal thermal noise level, where it will remain for the remainder of the sweep. Because of slow changes in receiver gain, the normal thermal noise may vary in amplitude over a period of time at a rate of up to 0.3 volts per minute.

3.4.2.1.3.2 Beacon mode pair trigger.- The CD-2 shall accept the beacon mode parr triggers generated within the beacon interrogator and use them to determine the range and beacon mode of the aircraft's video reply trains. The triggers will consist of a single pair of pulses per sweep, the separation of which will indicate the mode of that radar sweep. The first pulse to occur is designated P1 and the last pulse is P3. P3 is stationary with respect to beacon range zero. Any interlace sequence or combinations of Modes 2, 3/A, and C may be provided by the beacon radar.. The nominal and extreme characteristics of the beacon mode pair trigger will be as follows:

	Nominal	Extreme
(a) Amplitude	+15V	+10 to +60V
(b) Baseline	o.ov	-0.5 to +0.5V
(c) Width	1.0 us	0.5 to 2.0 us
(d) Rise Time	0.08 us	0.15 us max
(e) Fall Time	0.3 us	0.5 us max
(f) Pulse Spacing (P1 to P3)		
(1) Mode 2	5 us	4.8 to 5.2 us
(2) Mode 3/A	8 us	7.8 to 8.2 us
(3) Mode C	21 us	20.8 to 21.2 us
(g) Impedance	75 ohms	70 to 80 ohms

3.4.2.1.3.3 Antenna azimuth data.- The CD-2's azimuth input signals are described in 3.4.2.1.1.3.

3.4.2.1.3.4 Test target pulse.- The CD-2 shall provide a beacon test target pulse to trigger an external Government beacon test set for testing the overall beacon-digitizer system. The beacon test target pulse shall be generated as required by the test target generator within the control and interface module (3.4.3.1.3). It shall have a single, switchable output which is identical in performance to the search test target pulse (3.4.2.1.1.4).

3.4.2.1.3.5 Beacon status data.- The CD-2 shall provide a ground (return) signal to; and accept status signals from, the radar beacon performance monitoring (RBPM) equipment for the purpose of reporting the beacon's status to the remote facilities which use CD-2 data. At least 14 status signals shall be accepted: Active beacon channel, on-line beacon alarm, standby beacon alarm, on-line RBPM alarm, and ten spares. The cabling and electrical characteristics of this interface shall be identical to that specified for the radar status data (3.4.2.1.1.5).

3.4.2.1.4 Data transmission equipment.- All configurations of the CD-2 shall be designed to operate correctly and efficiently with the digital data communication equipment specified by FAA-E-2217, Parts 1 and 2, and listed in Table I. Figure 5a indicates the applicable interface signals, the characteristics of which are summarized in the following paragraphs.

The data shall be clocked out of the CD-2 by the leading edge of the clock signals generated by up to three independent modem transmitters. The output data shall be valid within 4.5 microseconds after the clock's leading (positive--going) edge. The positive amplitude shall represent a logical "1" state as indicated in Figure 5b.

Although the frequency of the clocks will normally be '2400 Hz (FAA-E-2217, Part 2, paragraph 2-3.3.3), the CD-2 shall be capable of operating with
any clock frequency from 1200 to 9600 Hz inclusive applied to any or all # three CD-2 FAA output data channels. The three modem clocks may be synchronous cr asynchronous and may not be at the same frequency. The electrical characteristics of the clock will be as specified in FAA-E-2217, Fart 2, paragraph 2-3.2.1 .3. The CD-2's interface cables and terminations for these clocks shall be such that correct operation is maintained with any combinati.on of condi tions permit ted by this paragr aph of FAA-E-221.7, including the 100-ohm source impedances. The output data channels of the CD-2 shall exhibit the following electrical characteristics (refer also to FAA-E-2217, Part 2, paragraph 2-3.2.1.2):

	Nominal	Extreme
(a) Positive Amplitude	+2.0V	+1.0 to +7.0V
(b) Negative Ampl Crude	-2.0V	-1.0 to -7.0V
(c) Rise and Fall Times	10 us	5 to 20 us
(d) Pulse Duration	417 us	413 to 421 us

The positive and negative amplitudes shall be balanced to within 10 percent of each other. The positive amplitude shall represent a logical "1" state. The interconnecting cables for both data and clock shall be RG-62/U or equivalent, unless specific written approval is granted by the Contracting Officer for the use of other cabling before equipment production begins.

3.4.2.1.4.1 Common output message formats.- The CD-2 output data provided to each modem shall consist of complete messages. In no instance shall a single message be split into parts and sent over more than one data channel. The formats for the common output messages (search, beacon, strobe, status, search real-time quality control (RTQC), and map) shall be as defined in Table II. In addition to these six message types, a 13-bit idle character shall be transmitted to maintain frame synchronization. The idle character shall be 0001111111111, with the bits transmitted in that (left-to-right) order. The idle character shall be transmitted at least once between successive complete messages on each data channel, and continuously when output messages are not available.

3.4.2.1.4.2 Alternate data transmission interface. The CD-2 shall also be designed to operate correctly and efficiently with modems and other devices using Electronic Industries Association (EIA) Standard RS-449, General Purpose 37-Position and 9-Position Interface for Data Terminal Employing Serial Binary Data Interchange. (At no time, however, will simultaneous operation of the CD-2 with RS-449 equipment and the data sets described in 3.4.2.1.4 be required. All electrical, functional and mechanical requirements of RS-449 shall be met. The interface boundary between the CD-2 and the RS-449 equipment shall be located within the CD-2 junction box (3.5.2.10). Only one RS-449 adapter (channel) is required; it shall provide balanced output signals. The connector and interconnecting cable shall support full duplex (SR) operation. The necessary electronics for the receive function need not be supplied.

The CD-2 shall be able to operate with the RS-449 modem in two modes. The first shall use an external clock provided by the modem or another device. The clock may have any frequency from 1200 to 9600 Hz inclusive. The CD-2 shall provide a single channel of serial data in synchronism with the clock in the same manner as is specified in 3.4.2.1.4 herein for the existing FAA data sets. The second operating mode shall utilize an internal clock within the CD-2. The highest frequency available from this internal clock shall be 9600 Hz, plus or minus 0.01 percent. Using countdown or other appropriate circuits, lower frequencies of 7200, 4800 and 2400 Hz shall also be available. Only one frequency shall be provided at a time. Selection of the clock's operating mode and frequency shall be accomplished by simple internal means.

3.4.2.1.5 CD-2 external data interface.- In addition to other input and output requirements, all data flowing on the system data bus of the on-line CD-2 channel shall be accessible to external equipment for future system-level interconnections. This external data interface shall be available at the same location as all other connections to external equipment (3.5.2.10). The interface shall conform with the functional requirements in IEEE-STD-488 (1975) for a standard performance bus with a capacity of 400,000 bytes per second. In order to accommodate operation of this interface from up to 300 feet (91.4 m) from the CD-2 equipment cabinets, the following electrical and mechanical interfaces shall be used. All output signals shall be provided at the junction box as balanced, twisted pair signals driven by type 26LS31 or equivalent integrated circuit drivers in the CD-2. Likewise, all external input signals to this interface shall be provided to the junction box as balanced, twisted pair signals capable of being properly received by type 26LS32 or equivalent integrated circuit receivers contained in the CD-2. A single Cannon "D" type or equivalent connector shall be provided in the junction box as the mechanical. interface for all these twisted pair input and output lines. This interface shall be designed such that the-entire CD-2 (after the on-line channel selection] can be designated as a talker, listener or controller of the data interface bus 'as viewed by external equipment. The formats of this data shall be as defined by the contractor but they shall be as similar to those of the common output messages (Table II) as is possible. The final formats shall be approved by the Contracting Officer.

3.4.2.1.5.1 CD-2 remote audible alarm.- The on-line CD-2 channel shall provide a signal for driving external, remotely located audible alarm modules. The driving voltage shall be +14 ± 4 volts dc with a source current capability of at least 400 mA but less than 500 mA.

3.4.2.1.6 Military equipment.- The CD-2C shall operate correctly with all of the Military equipment listed in Table I. The CD-2C shall be able to interface with any combination of single quantities of the listed equipment except that it need not operate with two height finder radars simultaneously. Figure 6 indicates the applicable interface signals, the characteristics of which are summarized in the following paragraphs.

3.4.2.1.6.1 AN/GPA-124 Coder-Decoder.- 'The signals provided to the CD-26 by the AN/GPA-124 coder/decoder will be synchronized with the GPA-124's pretrigger and will have the electrical characteristics described in Table IIIa as measured at the end of 100 feet of cable. The AIMS alarm signal will be provided on RG-62/U cable. The electrical characteristics of the signals provided to the GPA-124 by the CD-2C shall be as indicated in Table IIIb, again as measured at the end of 100 feet of the appropriate cable type. The GFA-124 pretrigger shall be provided on RG-59/U or equivalent cable.

The digital messages transmitted by the CD--2C to the GPA-124 shall be 24-bit serial messages with the meaning and information content of the incoming phone line messages (Table VII) as given in Table IV. The data shall be provided as positive pulses. During the message transfer, the CD-2C shall provide a shift pulse to the GPA-124 for each message bit to be transferred, for a total of 24 shift pulses per message. The shift pulses and their associated data pulses shall be time-coincident within 0.5 microseconds. The frequency of the shift pulses shall be that of the clock from the request line modem receiver. The message end signal shall consist of a single pulse timed to occur in the position of the nonexistent 25th data bit; it shall be a positive pulse and shall be provided on a separate line.

The timing and processing of the other signals shall be as described in (3.4.3.1.5.1).

3.4.2.1.6.2 USAF plan position indicator.-. The CD-2C shall provide all necessary confr'ol and video signals to the Air Force's plan position indicator (ppi). The synchro data and associated wiring shall be identical to that received by the CD-2 from the radar (3.4.2.1.1.3.2). In addition, each synchro signal conductor, except the ground, shall protect the equipments from current flow in excess of 0.5A. The information content of the other eight signals to the ppi shall be as described in 3.4.3.1.5.2; their electrical characteristics shall be as follows:

	Amplitude	Baseline	Rise and Fall Times	Pulsewidth
(a) PPI Trigger	+20V min	-0.5 to +0.5V	0.2 us max	1 to 5 us
(b) PPI ARP	+20V min	-0.5 to +0.5V	8.2 us max	1 to 5 us
(c) PPI ACP	+20V min	-0.5 to +0.5V	0.2 us max	1 to 5 us
(d) PPI Normal	(Adjustable)	-0.25 to +0.25V	Not more than input	Same as input
(e) PPI MTI	(Adjustable)	-0.25 to +0.25V	Not more than input	Same as input
(f) Gated Video	(Adjustable)	-0.25 to +0.25V	0.2 us max	2 to 10 us
(g) Beacon Video	(Adjustable)	-0.5 to +0.5V	Not more than input	Same as input
(h) AIMS PPI Video	(Adjustable)	-0.5 to +0.5V	Not more than input	Same as input

The amplitude of the gated video shall be adjustable from less than 0.5V to at least 5.5V.

The amplitudes of the four videos from external equipment (MTI, normal, beacon, and AIMS) shall be adjustable from less than 0.5V to at least 200 percent of the incoming amplitude but not greater than 6.0V They shall have the same amplitude characteristics (linear, log, or quantized) as the incoming videos. When analog videos are provided by the external equipment, the USAF ppi output versions of those videos shall have signal-to-noise ratios which are within five percent of the source videos. The termination impedance for each of the eight lines will be 70 to 80 ohms.

3.4.2.1.6.3 Height finder.- The CD-2C shall interface with one height finder radar and its two associated range-height indicators (RHI). Because the radar itself may be located away from the-CD-2C, the antenna synchro azimuth data, the RHI message console, and the height finder zero range trigger interfaces shall be designed for correct operation over distances of up to 1,000 feet (300 m).

3.4.2.1.6.3.1 Synchro data.- The synchro stator and reference signals provided to the CD-2C from the height finder will have the same electrical characteristics as those provided by the search radar to the CD-2A, CD-2B, or CD-2C (3.4.2.1.1.3.2). The 36-speed and l-speed rotor signals provided to the CD-2C from the C-1050 control unit will have the same electrical characteristics as the stator signals except that their amplitudes will vary from zero to 57.3V ac. The rotor signals provided from the CD-2 to the height finder shall have the same electrical characteristics as the C-1050's rotor signals. The cabling requirements shall be the same as those for the search radar synchro.

3.4.2.1.6.3.2 Zero range trigger.- The CD-2C shall provide a zero range trigger to the height finder radar to synchronize the height finder to the search radar. It shall have the same electrical characteristics and cable type as the USAF ppi trigger (3.4.2.1.6.2).

3.4.2.1.6.3.3 Range-height indicator.- The CD-2C shall generate the necessary interface signals to simultaneously and independently drive two RHIs over at least 1,000 feet (300 m) of cable. The RHIs may be of different types (one OA-270 and one OA-929) or both of the same type. The electrical characteristics of these signals shall be as specified in Table V. One of each of these signals shall be provided for each RHI group. The terminating impedance for the beam intensity signals will be 115 to 125 ohms, and the range sweep trigger will be terminated in 70 to 80 ohms. All other signals will have unterminated (high impedance) connections. Except for the range trigger, all RHI interface cabling shall be RG-62/U or equivalent.

3.4.2.1.6.4 Military modems.- The CD-2C shall operate efficiently with the digital data communication equipment provided by the USAF. A single modem receiver and up to two transmitters shall be able to be accommodated. Unless otherwise specified herein, the interface signals and cabling shall conform with the requirements of 3.4.2.1.4. The electrical characteristics of the receiver's data and clock outputs will be as specified in FAA-E-2217, Part 3, paragraph 3-3.2.2.2, and Part 2, paragraph 2-3.2.1.3,

respectively. The frequency of the request data and clock signals will not be synchronized with the transmitter clocks and may vary from 600 to 9600 Hz. The Military modem receiver will provide an indication of line failure to the CD-2C's Military interface group (MIG). The MIG shall be able to accept either a ground (zero volts dc) or +12 +2V dc as an alarm condition as selected by simple internal means.

3.4.2.1.6.4.1 Military message formats.- The output data provided to each Military modem by the CD-2's Military interface group (MIG) shall consist of complete messages. In no instance shall a single message be split into parts and- sent over more than one data channel. The output messages provided to the data sets shall consist of the same six message types identified in 3.4.2.1.4.1 and, in addition, shall include the unique USAF messages identified in Table VI. The protocol, including parity and idle character generation, shall be the same for the Military output data channels as for the FAA outputs.

The two types of Military request messages which will be provided to the MIG by the Military modem receiver will be as described in Table VII.

3.4.2.2 Internal CD-2 interfaces.- To permit operational and procurement flexibility in tailoring the CD-2 to meet differing performance requirements, the internal CD-2 interfaces shall be standardized as provided herein. The connections between the system data bus and the Military interface group (MIG) shall fully conform with the electrical, functional and mechanical requirements'of IEEE-STD-488(1975) as described for the CD-2 external data interface (3.4.2.1.5). Similarly, the digital interfaces provided to connect the system data bus and the future radar modules (3.4.3.2 and 3.4.3.3) shall also conform to the IEEE standard. These requirements are not intended to restrict the implementation options for the internal CD-2 system data bus, but serve only to establish standard interconnection ports.

3.4.3 Detailed functional requirements.- In addition to the overall performance requirements specified in 3.4.1, the CD-2 shall meet the functional requirments specified in 3.4.3.1 in its initial, delivered Configuration. In addition, it shall have the features necessary to provide compatible operation with the Moving Target Detector (MTD) modification to the search radar and the ATCRBS Monopulse Processing Subsystem (AMPS) modification to the beacon radar, as well as the Discrete Address Beacon System (DABS) equipment, as specified in the succeeding paragraphs.

3.4.3-l Initial CD-2 functions.- The initial capabilities and functions of the CD-2 shall be as described in the following subparagraphs.

3.4.3.1.1 Beacon target extractor.- The BTE shall consist of a reply converter and a programmable processor. The reply converter shall provide data'to the processor in the form of digital words which contain the mode interrogated and the status of the converter as well as the range, azimuth, and code of each detected reply train. Using these reply words, the processor shall prepare completed target reports and provide them to the system data bus. The formats of the converter's reply words shall

be initially defined by the contractor and shall be subject to approval by the Contracting Officer. Any or all of the functions of the BRC may, at the contractor's option and with specific Governmental approval, be performed by the programmable BTE processor. In this event, the contractor shall redefine the specific content of 3.4.3.1.1.1.7 herein.

3.4.3.1.1.1 Beacon reply converter.- The BTE's reply converter (BRC) shall receive antenna azimuth data, beacon mode and range data, beacon video, test video, and a test indicator from the control and interface module (CIM). The BRC shall contain a video quantizer and appropriate bracket detection, code extraction, reply degarbling, and timing circuitry. The quantizer shall provide a single-bit output data stream and shall be used when analog video is provided to the CD-Z. When quantized video is provided by the beacon radar, it shall be possible to pass the video through the BRC quantizer or, as selected by simple and convenient internal means, to insert the quantized video immediately after the quantizer. When the BRC quantizer is bypassed in this manner, the externally-quantized video shall be processed by the BTE in exactly the same way as the external analog signal, with the sole exception of the quantizing function.

3.4.3.1.1.1.1 Video quantizer.- Upon entering the BRC, the beacon video shall be subjected to a one-half amplitude quantizing function and compared to selected amplitude and pulsewidth acceptance criteria. Those pulses meeting both criteria shall be provided to the bracket detector; all other signals shall be inhibited. Only a video pulse which, at its 50 percent amplitude point (as measured from the video baseline to the peak amplitude of the pulse), meets both of the following acceptance criteria shall be passed:

(a) Amplitude. A variable threshold shall be provided to establish the acceptable data slice level. Any video pulse which exceeds this threshold by 100 mV or more shall be considered acceptable. The threshold shall be adjustable from less than 0.20V to more than 2.0V and shall not vary more than 50 mV from the set value over a 168-hour interval in any environmental condition permitted in 3.3.2.1. In the event that the threshold adjustment is implemented digitally, the adjustment granularity shall be no greater than 50 mV. The threshold shall be fixed, that is, independent of the input noise.

In addition, it shall be possible to have the threshold be automatically adjusted in response to noise amplitude variations such that it maintains a fixed relationship with respect to the average of the video noise outside of the gtc area. This variable threshold shall not vary with the gtc effect but shall follow the longer term thermal noise variations specified in 3.4.2.1.3.1. The relationship of the variable threshold to the video noise estimate shall be able to be adjusted by a separate control over a range of from at least 0.2V below the noise to at least 1.0 volt above the noise. Once established, this relationship shall not vary by more than 50 mV under the conditions specified above for the fixed threshold. In the event thit this control is implemented digitally, the granularity of the range of values shall be no greater than 50 mV. The estimate of the video noise shall be determined by measuring the video noise in a range window for the last 100 or more

consecutive beacon sweeps and calculating the average value of the noise samples The window shall be greater than 63 nanoseconds but less than 125 nanoseconds long. It shall, by simple internal means, be able to be placed at any range from less than 60 miles to within 20 microseconds of the maximum range permitted by the beacon radar's prf, with a granularity of five miles or less.

(b) Pulsewidth. A fixed width threshold shall be provided to establish the minimum acceptable reply pulsewidth criterion. Any video pulse which exceeds this threshold shall be considered acceptable. The fixed threshold shall be set so as to accept all pulses 300 ns or wider while rejecting all pulses 150 ns or narrower. The width of the pulse passed to the bracket detector shall be within 100 ns of the video pulse's width, as measured at its 50 percent amplitude point, providing that it exceeds this established minimum pulse-width criterion. The width threshold circuitry shall be implemented using digital logic which is synchronized with, and operates at multiples of, the basic BRC detection range clock. All pulses passing the minimum pulse width threshold criterion shall be provided to a fixed maximum pulse width criterion, Any video pulse which is less than or equal to 15 BRC detection range clocks in width shall be considered acceptable and passed to the next processing circuit. Video pulses exceeding this maximum threshold shall be truncated to the 15 BRC clock width before being sent to the next processing circuit.

The adjustment and selection of the quantizer's acceptance criteria (not including the range of the noise sample window) shall be made by simple and convenient internal controls or wiring changes which may be performed while the machine is in operation. The actual criteria applied to the video shall be available for in-operation observation during the adjustment process.

3.4.3.1.1.1.2 Bracket detection.- The BRC shall recognize the presence of the beacon framing pulses (F1 and F2) in the video reply train by sensing the nominal 20.3 us spacing between their leading edges (refer to FAA Order 1010.51A, Attachment 1). If the pulsewidth of F1 is less than or equal to 0.55 us or if it is within 0.13 us of the width of F2, the leading edge of Fl shall be used as the reference for this measurement. Otherwise, the leading edge of F2 shall be used. Other algorithms for detecting brackets and determining the reply's range and, hence, the correct timing for code data sampling which meet or exceed the performance of this technique may be utilized upon receipt of specific written approval from the Contracting Officer. The Fl-F2 spacing shall be sensed with a tolerance which is adjustable by simple internal means. This adjustment shall be implemented by sensing pulse spacings which occur within an integral number of BRC range clock pulses of the nominal 20.3 us spacing provided that the range clock's frequency permits the specified tolerances to be met. The minimum tolerances within which the BRC shall declare brackets and outside of which the BRC shall not declare brackets shall be as follows for a BRC range clock period of 85 to 125 nanoseconds (ns).

Tolerance Setting	Accept Tolerance	Reject Tolerance
±0.1 us	±1 clock period	±2 clock periods
±0.2 us	±2 clock periods	±3 clock periods
±0.3 us	±3 clock periods	±4 clock periods

For a BRC with a range clock period outside of the 85 to 125 ns interval, the tolerances shall be as follows:

Tolerance Setting	Accept Tolerance (with respect to 20.3 us)	Reject Tolerance (with respect to 20.3 us)
±0.1 us	±100 ns	±250 ns
±0.2 us	±200 ns	±375 ns
To.3 us	±300 ns	±500 ns

The bracket detection logic shall recognize and inhibit the false bracket detection output that could otherwise occur because of the presence of the C2 and Special Position Identification (SPI) pulses in a reply train. Detection of a valid bracket pair shall cause the sampling of the data in the mode, range, and azimuth registers for use in the code extraction and garble sensing circuits, and for inclusion in the BRC's output reply word. Bracket detection information shall also be provided to the maintenance console (MC) for tabulating and display as specified in 3.4.3.1.7 and 3.4.3.1.4.1.1, respectively.

3.4.3.1.1.1.3 Code extraction.- The sensing of the beacon framing pulses shall cause the samplrng of all of the information pulses which may be associated with the reply. The nominal positions and pulsewidths of the 13 code pulses and the SPI pulse will be as specified in Attachment 1 to FAA Order 1010.51A. The particular reference used for each individual bracket detection (3.4.3.1.1.1.2) shall be used to establish the nominal sampling positions of the information pulses associated with that bracket. Regardless of the reference used, the sampling shall be accomplished using the same tolerances as specified for bracket detection, except that there shall be only two selectable settings for the code data sampling tolerance: ±0.1 us and ±0.2 us. The sampling technique shall not necessarily require a leading edge to detect a code pulse. The selection of the code data tolerance shall be accomplished by simple internal means and shall be separate from those of bracket detection or garble sensing.

3.4.3.1.1.1.4 Garble sensing.- The BRC shall check the bracket and code data for garble conditions that may exist which would interfere with the target detection and code validation processes. Interleaved replies are, by definition, not mutually interfering and shall not cause a garble declaration regardless of the extent of the interleave. Similarly, closely-spaced replies do not mutually interfere. Therefore, all replies involved in an interleaved or a closely-spaced reply condition, or a combination thereof, shall be correctly and unambiguously decoded and processed without garbling. The BRC shall recognize the false, "phantom" brackets which can occur in the closely-spaced reply condition when nonframing pulses in different replies occur at the 20.3 us framing interval. All such phantan brackets shall be detected and eliminated without garbling ok otherwise affecting the two correct replies. All bracket and code data shall be retained long enough to permit checking for potential garbling caused by possible overlapped replies. The tolerances for this check shall be implemented in the same manner as those of the code extraction circuitry, except that the tolerances shall be ±0.2 us and ±0.4 us.

A separate and internal.- means of control is again required'. The delay inherent in this check shall not cause incorrect range. or azimuth reporting of any resulting target. The information data associated with overlapped replies which
cannot be unambiguously resolved shall be destroyed: (set to all zeros or ignored at the contractor's option). and' a garble flag set in the associated reply word.
The bracket detections of the overlapped replies shall' remain intact and" shall be available for use in the target detection process. The number of declared garble conditions shall be available to the CD-2 operator as required in 3.4.3.1.7.3.

3.4.3.1.1.1.5 Special Military replies.- Certain Military transponders indicate emergency and identification conditions with special reply formats. These special Military responses to Mode 3 interrogations are defined and shall be processed, as specified below:

(a) In lieu of the civilian transponder's single emergency (code 7700) reply, some Military transponders. will! transmit Four complete reply pulse trains, with the first framing- pulse of: the succeeding reply trains occupying the SPI pulse position of the preceding pulse train , The emergency code of 7708, if it is transmitted at all:, may appear in the first reply train with either the normal Mode 3 code or an all-zero code in the remaining trains.. The RRC shall recognize this reply format even if the second or third reply train (but not both) is missing, and shall'. report it to the BTE processor as a single reply with a Military emergency flag bit set. The BRC output shall include the range, azimuth, and code of the first reply train only.

(b) Deleted .

3.4.3.1.1.1.6 RRC timing.- The BRC shall provide a means of associating, the correct range and azimuth data with each reply detected and reported to the BTE processor. These, functions. are specified in this subparagraph as part of the BRC although, at the contractor's option, certain of these functions may be physically implemented in the control and interface module (CIM). In the latter instance, appropriate status indicators shall be provided to the BRC for transmission to the BTE processor.

The BRC shall contain appropriate range clock generation circuitry. The clock's frequency shall be such that an integral number of clock pulses occur in the nominal video code pulse interval of 1.45 us and bracket interval of 20.3 us. The least significant bit of the range word used for the bracket detection reply shall be no greater than 125 ns. The leading edge of the P3 pulse of the beacon mode trigger shall define beacon zero range. All time or range manipulations in the BRC shall

use the BRC range clock or multiples thereof. The conversion of BRC range to nautical miles for a target report shall be performed in the BTE processor. A BRC range alarm shall be indicated if the clock fails or changes frequency such that the design value number of clock intervals yields a value more than 20 ns from the correct bracket spacing of 20,300 ns. The BRC shall also decode the mode trigger pulse spacings for Modes 2, 3/A, and C in any interlace sequence and provide the appropriate mode data to the BTE processor. If an illegal or out-of-tolerance pulse spacing is received or if the P3 pulse fails or is more than 2.0 us from its expected position, a mode trigger alarm shall be indicated and sent to the BTE processor.

The BRC shall contain appropriate azimuth word generation circuitry. The
input data shall be in the form of improved azimuth change pulse data (16,384 ACPs per ARP). Thus, the least significant bit in the azimuth word shall be
0.022 degrees. The BRC shall use the corrected beacon ARP from the CIM for proper azimuth reference. All azimuth manipulations in the BRC and the BTE processor shall use this azimuth reference and position granularity. A BRC
azimuth alarm shall be indicated if there are not exactly 16,384 IACPs per ARP.

3.4.3.1.1.1.7 BRC output.- The BRC shall output its data to the BTE processor using appropriate parity encoding, acknowledgement, "handshaking" or other appropriate techniques to insure the integrity and complete transfer of all BRC data to the processor. If the transfer is incomplete or the processor cannot accept the reply data within the time necessary to meet the performance requirements established elsewhere, a BRC output alarm shall be indicated. This alarm, in particular,' shall not depend solely on the normal data transmission technique for its transfer to the BTE processor. Similarly, if the BRC loses data because of any register or buffer overflow due to conditions external or internal to the CD-2, a BRC overflow alarm shall be indicated. The BRC shall indicate each reply as being a test reply if its corresponding test indicator is set by the CIM. The BRC output shall include at least the following information, where the notation "reply" indicates data transferred with each bracket detection:

(a) BRC status (4 bits)
(b) Mode trigger alarm
(c) Reply mode indicator
(d) Reply test flag (1 bit)
(e) Reply azimuth (14 bits)
(f) Reply code (14 bits)
(g) Reply garble and Military emergency flags (2 bits)
(h) Reply range

3.4.3.1.1.2 BTE processor.- The BTE processor shall receive the data from the reply converter and perform all of the processing necessary to provide completed target reports to the system data bus, All of the operational and self-test functions of the BTE processor shall be controlled by the appropriate software. At the contractor's option, certain functions of the processor may be implemented in programmable hardware rather than in a microprocessor per se. If this approach is chosen, however, the control (reprogramming) of the hardware shall he exercised by a microprocessor and, in turn, its programming. Thus, it shall be possible to control, and via appropriate software modifications to alter, the type of algorithms and the parameters thereof which are used for at least the following functions:

(a) Target detection
(b) Code validation
(c) Code transformation
(d) Target position bias correction
(e) Run length processing
(f) Beacon strobe processing
(g) Beacon processing range
(h) Search and beacon correlation
(i) Beacon offset
(j) Output buffering
(k) Output message contents
(l) Sel f test
(m) Status monitoring and reporting

All program coding shall reside in an alterable read--only program memory. The contents of this program memory shall not be alterable in'the CD or any of its supporting equipment intended for operational field facilities. It shall, however, be possible to alter, duplicate, or'completely modify the memory's contents (and, thus, the processor's functions) using the appropriate CD-2 supporting equipment provided to the Government maintenance support facilities for that purpose.

3.4.3.1.1.2.1 Beacon target detection.- The BTE processor shall accept bracket declarations, ungarbled code data, and appropriate status flags and timing data from the BRC for use in the processor's target detection process . The reply data shall be compared in range, azimuth, and code with previously received replies such that all Mode 2, 3/A, and C replies # from a single aircraft are grouped into a single target file. No reply # shall be correlated with, or used in formulating, more than a single target report. If a choice of targets exists for a given reply, the reply shall be correlated with the most similar target file, and the special beacon target indicator flag shall be set in all target files considered for such correlation. Each reply that fails'to correlate with an existing target file shall cause the formation of an initial target file. The correlation criteria shall be a fixed software function of the detection algorithm and shall not be accessible to operation or maintenance personnel. Replies from only Mode 3/A or, alternatively, both Modes 3/A and C interrogations shall be used in the target detection process; selection shall be by a simple' internal control.

The specific detection algorithm implemented in the BTE processor shall be either a sliding window or, at the contractor's option, a type of sequential observer. The algorithm shall use a fixed range cell technique for allocation of reply range data or, optionally, a floating range cell technique. The selected algorithm, including the appropriate range allocation technique, shall be implemented in all BTE processors. The algorithm shall, however, be chosen and implemented in such a manner as to meet or exceed the accuracy, resolution, split and false target rates, and probability of detection requirements specified in 3.4.1.2 under any permissible combination of radar and aircraft conditions as specified in 3.3.1. The selected technique shall be able to resolve and correctly report at least four stationary, interleaved targets where the F2 pulses of the furthest replies occur less than 3.0 nmi after the SPI position of the first target's replies. Any embellishment to the basic target detection algorithm which is required to meet these requirements shall be provided. All fixed parameters necessary to optimize the detector to a radar or reply situation, including the lead and trail edge criteria and, in the case of the sliding window algorithm, the window length, shall be able to be adjusted by simple internal means.

3.4.3.1.1.2.2 Code validation.- The BTE processor shall attempt to validate the ungarbled Mode 2, 3/A, and C codes, including SPI, X and military emergency bits which are correlated with a target during the target detection process. The validation process shall start immediately after target leading edge has been declared. Except as noted in paragraph 3.4.3.1.1.2.3, a data code shall be validated if, during the target detection process, V or more consecutive ungarbled replies to the same interrogation mode identically compare on a bit-for-bit basis, where V is the validation count. The value of V shall be manually adjustable from less than two to at least six in unit increments by a simple internal means. The validation process shall be conducted separately, and shall set separate code-valid flags, for the following code bits: 12-bit Mode 2, 12-bit Mode 3, 12-bit Mode C, SPI, Mode 2's X-bit, Mode 3's X-bit, and the Military emergency bit. If the validation attempt is not successful, the appropriate code-valid flag shall remain not set and, in the cases of the three 12-bit codes only, the value last received before the completion of the target detection process shall be included in the output target report. If, during the entire run length of a target, no ungarbled replies are received for a given mode, then the appropriate code bits shall be set to all zeros and the appropriate code-valid flag shall remain not set. In all other instances, the validated code or codes shall appear in the target report. Upon successful completion of the validation process, the incoming code data shall continue to be inspected and utilized by the target detector to resolve 'any adjacent targets.,

3.4.3.1.1.2.3 Code transformation.-After validation and before entering the tarqet report inta the output buffer, the BTE processor shall transform the Mode 3/A, Mode C, and Mode'2 code data from the aircraft reply format to the digital message format. The Mode 3/A reply grouping of C-A-B-D shall be transformed to the binary-coded-decimal format of A-B-C-D, as specified for the beacon output message (Table II). When the Military emergency bit is validated, the aircraft's Mode 3/A code shall be replaced with code 7700 and the Mode 3/A validation flag shall be set. The Mode C reply grouping of C-A-B-D shall be transformed to the appropriate 12-bit binary code (a sign bit plus 11 data bits) indicating the aircraft's reported pressure altitude. Negative altitudes,. in addition to setting the sign bit, shall be reported in 2's complement form. Refer to Figure 1 of Attachment 1 to FAA Order 1010.51A and Table II herein for additional
Mode C conversion requirements. Illegal or undefined Mode C reply codes shall be reported without the Mode C validation flag being set, even if they otherwise meet the validation criterion. The Mode 2 reply data # shall be rotated one bit to the right such that it conforms with the format of Table II.

3.4.3.1.1.2.4 Beacon tar&position bias correction.- The BTE processor shall provide for the correction of the position of all beacon targets to eliminate any positional bias errors introduced by the target detection process. This correction shall be a software parameter which is not subject to operator control. It shall be a single fixed value, unless the selected target detection algorithm requires a dynamic correction technique to meet the established performance requirements. In the latter instance, the dynamic correction shall be implemented in such a manner that it can be easily modified at such time as the target detection algorithm is modified. The BTE shall also transform the target's range from BRC range clock intervals to nautical miles as a part of this bias correction process.

In addition to this correction, a separate manual means for inserting range corrections shall be provided to offset any range errors caused by search-to-beacon radar timing or other sources of error which may exist external to the CD-2. This correction is in addition to similar adjustments required elsewhere and shall not invalidate the accuracies of internally-generally beacon test targets. It shall be established and inserted by a simple and convenient internal control. The range correction shall provide for biasing the target report range from zero to at least 5.0 nmi in either direction from the nominal target position in increments of 1/32 nmi or less.

3.4.3.1.1.2.5 Beacon run length processing.- The BTE processor shall be able to Inhibit beacon targets which have unacceptable run lengths and output those which are of an acceptable run length. An acceptable beacon target is one which consists of no fewer than SRI3 replies nor more than LRB replies, where SRB indicates a short run length threshold for beacon targets and LRB is their long run length threshold. A target file which does not contain at least SRB correlated replies or which contains more than LRB correlated replies shall not result in a final target report. The values of LRB and SRB shall be able to be independently set in each of at least 16 independently established range and azimuth sectors. SRB shall be variable from zero to at least 15 and LRB shall be variable from less than 8 to at least 100 in integer values. The start-stop range and azimuth values for each sector shall be able to be independently set anywhere in the BTE's coverage with a resolution of 0.7 degrees and 0.5 nmi or better. Each sector shall be able to provide full azimuthal coverage (360 degrees). The control of the sectors and values for SRB and LRB shall be exercised from the front panel of the maintenance console. This run length discrimination feature shall be enabled or disabled from the front panel of the maintenance console and shall not apply to beacon strobe or beacon real-time quality control (RTQC) test targets.

In addition to the run length discrimination, the BTE processor shall convert the run length information from the number of replies which make up the report, to the azimuth extent over which those replies were received. This azimuth run length shall be provided for all BTE output target and strobe reports and shall have an LSB of 0.088 degrees and an MSB of 22.5 degrees. As indicated in Table II, the run length is always reported in the common format strobe message but it must displace other bits in the beacon message because of message capacity limitations. Accordingly, the BTE processor shall, as controlled from the front panel of the maintenance console, set or reset a beacon run length reporting flag in each BTE output target report. This flag shall then be used in the CIM to initiate insertion of the azimuth run length data in the common format beacon messages. When beacon run length reporting is enabled in the on-line CD-2 channel, a conspicuous notation to that effect shall be displayed on the maintenance console to alert the site personnel to this nonstandard condition.

3.4.3.1.1.2.6 Beacon strobe processing.- The BTE processor shall count the number of bracket declarations each sweep and compare them to a manually adjustable threshold. When the threshold is exceeded, the processing of all new bracket detections shall be inhibited for the remainder of that sweep while any in-process targets shall continue to be processed and reported out normally. Normal inputs to the target detector shall resume after an additional, complete radar sweep with fewer brackets than the strobe threshold has passed and been observed. For each sweep or portion thereof in which normal inputs to the target detector are inhibited, an artificial bracket detection pulse shall be inserted into the target detector with a pseudo range of 254.5 nmi. The normal beacon target detection algorithm shall apply to this pseudo target except that every sweep with a strobe declaration shall be used in the detection algorithm, regardless of the mode interlace. Any resulting beacon strobe target shall be reported as specified in 3.4.3.1.1.2.11 with the pseudo range of 254.5 nmi, and the detected center azimuth and run length.

The beacon strobe elimination feature shall be able to Se enabled or disabled from the front panel of the maintenance console. The threshold for activating the strobe elimination function shall he adjustable in increments of 16 from zero to at least 512 by simple internal means.

3.4.3.1.1.2.7 Beacon processing range.- The BTE processor shall be able to inhibit the reporting of beacon targets which are not within a site-&electable range coverage. The beacon minimum range shall be variable from zero to at least 32 nmi and the beacon maximum range shall be variable from zero to the maximum BTE range. The values shall be separately adjustable in increments of 0.5 nmi or less by simple internal means. Neither function shall affect the reporting of beacon strobe, RTQC, or self-test targets.

3.4.3.1.1.2.8 Beacon and search correlation.- All CD-2 configurations, except the CD-2B, shall be able to correlate the separate search and beacon target reports which result when the same aircraft target is detected by the beacon radar and BTE, and the search radar and STE. The correlation process may be implemented in the BTE processor or, at the contractor's option, in the STE processor. The inclusion of the correlation requirements in this paragraph shall. not be interpreted to require that this function necessarily be implemented in the BTE processor.

The correlation shall be accomplished such that a single beacon target report, with the radar-reinforced bit set, is output for a single aircraft which is detected by both radar systems. The correlation algorithm shall work on completed search and beacon target reports only, and shall be accomplished prior to entering the target report in the output buffer queue for transmission as a final target report. If the search target with which a beacon target is successfully correlated was detected using the mti video, the mti flag shall be set in the final correlated target report. The correlation algorithm shall correlate only those targets which meet established range and azimuth relationships. These relationships shall be initially determined by the contractor and approved by the Contracting Officer prior to the start of equipment production. The correction criteria shall be able to be modified by appropriate software changes. The correlation process shall not delay any target more than 100 milliseconds. The beacon-search reinforced message shall contain either the position of the search target, the position of the beacon target, the search range and beacon azimuth, or the beacon range and the search azimuth. The selection of the data source for the position # report shall be accomplished by a simple internal means. The target runlength reported out of the correlator for a search-reinforced beacon message shall be from the same source (i.e., beacon or search) as the azimuth position data. A single target which is detected by both radars 'shell be reported as a single correlated beacon message at least 99.9 percent of the time. #

3.4.3.1.1.2.9 Beacon offset.- The BTE processor shall be able to offset the range of beacon targets in order to defeat the correlation algorithm and, thus, collect both search and beacon target data from aircraft returns. The offset shall add 0.500 nmi to the otherwise correct range

of all beacon targets except those generated internally for the real-time quality control function (3.4.3.1.3.4.1). The ntfset shall be able to be enabled or disabled from the front panel of the maintenance console. When the offset is enabled, a conspicuous notation to that effect shall be displayed on the maintenance console and the condition reported in the BTE status report.

3.4.3.1.1.2.10 BTE output target message contents.- The BTE processor shall provide its output data to the system data bus for distribution as controlled by the CIM. The specific formats of the beacon target report, beacon strobe report, and BTE status report messages provided by the BTE to the system data bus shall be as defined by the contractor. The messages should resemble the common output message formats given in Table IT insofar as possible. The messages must contain at least the following information:

(a) Beacon target report

(1) RTQC - This bit shall be set only for the beacon real-time quality control (RTQC) test target.

(2) Test - This bit shall be set if the CIM test indicator was present for one or more of this target's replies.

(3) Message label - A unique bit arrangement which identifies the message as a BTE output target report;

(4) Code validation and emergency flags - The six code validation flags (Mode 2, Mode 2"X", Mode 3/A, Mode 3/A "X", Mode C, and Identification or SPI) shall be set upon successful completion of their respective validation processes. The presence of a validated 7600 or 7700 Mode 3/A code shall be sufficient to set the respective emergency flag.

(5) Radar reinforced - This bit shall be set only if search-beacon correlation is performed in the BTE and if the correlation criteria have been met for this target.

(6) User bits - The FAA and Air Force user bits shall both be set in each beacon target report.

(7) Range - The average range of the individual replies which make up this report. The LSB shall be 1/32 nmi and the MSB shall be 128 nmi.

(8) Special target - This bit shall be set as specified in 3.4.3.1.1.2.1.

(9) Azimuth - The average azimuth of the individual replies which make up this report. The LSB shall be 0.022 degrees and the MSB shall be 180 degrees.

(10) Discrete - This bit shall be set whenever the report contains a discrete Mode 3/A code.

(11) Run length flag and data - These bits shall represent the azimuth run length of the target as specified in 3.4.3.1.1.2.5.

(12) MTI flag - This bit shall be set as specified in 3.4.3.1.1.2.8.

(13) Code data for Modes 2, 3/A, and C - These bits shall contain the validated or unvalidated code data of the target. A given code field shall consist of all zeros if that particular mode was not interrogated or if the aircraft did not reply, was garbled, or replied with framing pulses only to Mode 2 or Mode 3/A interrogations.

(b) Beacon strobe report

(1) Test - This bit shall be set if the CIM test indicator was present for one or more of this target's replies.

(2) Message label - A unique bit arrangement which identifies the message as a BTE output strobe report.

(3) User bits - The FAA and the Air Force user bits shall both be set in each beacon strobe report.

(4) Range - The range bits shall be set as specified in 3.4.3.1.1.2.6 and shall use the same LSB and MSB as a beacon target report.

(5) Azimuth - These bits shall represent the same information as those for a beacon target report.

(6) Run length data - These bits shall represent the azimuth run length of the strobe as specified in 3.4.3.1.1.2.5.

(c) BTE status report

(1) BRC range alarm
(2) BRC azimuth alarm
(3) BRC output alarm
(4) BRC overflow alarm
(5) Beacon mode trigger alarm
(6) Results of the operational self-test
(7) Beacon offset
(8) Beacon run length reporting
(9) Beacon run length discrimination status on/off

If the beacon-search correlation is not performed in the BTE, the beacon target report need not contain the radar-reinforced or mti flag bits.

3.4.3.1.1.2.11 BTE self-test.- The BTE processor shall routinely test itself, check the test data against established norms, and report the results of the check. Two types of testing shall be incorporated into the self-test function: operational and diagnostic.

3.4.3.1.1.2.11.1 Operational self-test.- The operational BTE self-test shall operate continuously when the BTE is in the normal operating mode, whether or not the associated CD-2 channel is actually on-line. The BTE processor shall, via the system data bus, direct the test target generator in the CIM to generate the appropriate test signals to simulate the types and quantities of test targets required to establish that the complete BTE is functioning correctly. The formats of these messages to the CIM shall be as defined by the contractor. The test target generator output for these operational self-test functions shall not contain the test indicator signal, but shall appear as normal, live target data. External beacon video shall be inhibited for the minimum time necessary to prevent interference or garbling of the self-test signals. The test signals provided to the BRC shall include the following conditions at a minimum:

(a) Framing pulses with acceptable and unacceptable pulse spacings,

(b) Code pulses that are correctly and incorrectly located with respect to both normal and wide framing pulses,

(c) Reply codes and range separations which verify the correct elimination of phantom and C2-SPI false brackets, the proper detection of interleaved, overlapped, and special Military replies, and the correct correlation and range resolution of the replies by the target detection algorithm, and

(d) Simulated Mode 2, 3/A, and C targets which verify the correct operation of the target detection, code validation, code transformation target position bias correction, and run length processing and encoding functions.

The operational self-test targets shall be generated as close to the adapted BTE maximum processing range as is possible and, in contrast with the RTQC test targets, shall be for internal CD-2 status monitoring only. All self-test target data shall be capable of being displayed on the maintenance console but shall not be transmitted to the data sets. The test signals shall be injected immediately following the quantizer or, when the quantizer is not bypassed (3.4.3.1.1.1.1), shall be injected into the quantizer's front end. In the latter configuration, appropriate test signals (not necessarily from the CIM) shall establish that the amplitude and pulsewidth quantizing logic is operating as specified.

Another facet of the operational self-test is the validation of the search-beacon correlation algorithm. This particular self-test function shall be implemented in the processor in which the search-beacon correlation is performed. In the event that the BTE processor performs this self-test function, false error conditions as the result of missing search reports shall be inhibited in the CD-2B configuration.

The operational self-test shall also detect any loss of data as the result of the overflow or failure of any register, buffer, or complete memory system within the BTE processor. Normal adjustments of the BTE's parameters such as beacon offset, maximum range, run length discrimination, and other similar parameters shall not impair the effectiveness or 'accuracy of the operational self-test. A complete operational self-test cycle shall be completed and the results updated at least once every four antennn scans.

3.4.3.1.1.2.11.2 Diagnostic self-test.- The BTE's diagnostic self-test shall be able to be initiated only when the associated CD-2 channel is off-line. The test shall be manually initiated from the front panel of the maintenance console and shall include the following at a minimum:

(a) A check of all microprocessor operational program memories to insure that the correct data is in each memory location.

(b) A thorough, rigorous check of all random-access and scratchpad memories to ascertain their oper-ating conditions.

(c) Verification of the correct operation of each computing element in each microprocessor.

(d) Verification of the ability of the processors to process internal data in the absence of external stimuli.

(e) Verification of the correct operation of the five alarm detection circuits in the BRC (3.4.3.1.1.1.6 and 3.4.3.1.1.1.7).

(f) Verification of the correct operation of the beacon strobe processing and output message generation functions.

The test signals necessary for tests (e) and (f) above shall be generated, inserted, and able to be displayed in the same manner as the operational self-test target signals.

3.4.3.1.1.2.12 BTE status monitoring and reporting.- The BTE processor shall monitor the status of the BRC, the status of the beacon offset and run length reporting features and the results of the operational self-test, and provide all results to the CD-2 system monitor for formatting and reporting to the maintenance console and the data sets. The status shall. be updated within 0.5 seconds of the detection of any change in status. The results of the diagnostic self-test shall be provided to the system monitor within four minutes of the time the test was initiated.

3.4.3.1.2 Search target extractor.- The STE shall consist of a set of analog-to-digital (A/D) converters and a programmable processor. The A/D converters shall provide a digital representation of the amplitudes of two search videos to the processor. Using search range and azimuth data provided by the CIM, the processor shall perform two functionally different and distinct processes to obtain completed search target reports and completed weather messages respectively. It shall be possible to bypass the A/D converters so that the processor receives directly from the CIM the digital videos from the terminal radars which have a digital output capability. The STE processors for the CD-2A and the CD-2C shall be identical; that of the CD-2D shall be identical to the STE processor of the CD-2A and CD-2C to the greatest extent possible.

3.4.3.1.2.1 Analog-to-digital converters.- The A/D converters shall provide
at least an 8-bit digital representation of each of two analog videos. The # videos shall be either external radar videos or a test video as determined
in the CIM. Scaling of the analog videos shall be selectable in the STE via simple internal means such that the MSB of the A/D output can be set equal to either 2.0, 3.0 or 4.0 volts at the external video input to the # CD-2. Quantized radar data shall merely cause the converter's output to "vary between high and low digital values corresponding to the input voltages. The sampling rate of the converters shall be controlled by the STE processor or, at the contractor's option, by the CIM. In either instance, the sample
period shall be variable from less than 250 ns to at least 800 ns in increments of 96 ns or less for the CD-2D, and from less than 0.8 us to at least 3.1 us in increments of 193 ns or less for the CD-2A and CD-2C. The sample rate # shall be selected by simple internal means and shall be an integral multiple or factor of the range allocation technique used in the target detection algorithm. The A/D converters shall provide a sample valid signal to the STE processor to indicate when the converters' outputs are correct.

The contractor may, at its option, provide A/D converters which are dedicated to a given video, or a single converter set which is time-multiplexed between the two videos. In the latter configuration, the contractor shall provide a suitable additional adjustment range to the video alignment feature in the STE processor (3.4.3.1.2.2.2.1), such that correct alignment of the incoming search videos is still possible. In either instance, digitized outputs of the two videos shall be provided for the full range of the radar. The conversion time, accuracy, overshoot, and other characteristics of the A/D converters shall be such that the performance requirements established herein are consistently met or exceeded.

3.4.3.1.2.2 STE processor.- The STE processor shall receive data from the A/D converters and the CIM and perform al? of the processing necessary to provide completed target reports and weather messages to the system data bus. All of the operational and self-test functions of the STE processor shall be controlled by the appropriate software. At the contractor's option, certain functions of the processor may be implemented in programmable hardware rather than in a microprocessor per se. When this approach is chosen, however, the control (programming) of the hardware shall be exercised by a microprocessor and, in turn, its programming. Thus, it shall be possible to control, and via appropriate software modifications to alter, the type of algorithms and the parameters thereof which are used for at least the following functions:

(a) Target video processing
(b) Target detection
(c) Target position and bias correction
(d) Run length processing
(e) Strobe processing
(f) Search maximum and minimum processing range
(g) Weather video processing
(h) Weather range and azimuth integration
(i) Weather video crossover
(j) Weather thresholding
(k) Weather reporting
(l) Weather maximum and minimum processing range
(m) Output message contents
(n) Self-test
(o) Status monitoring and reporting

At the contractor's option, any part or all of the functions of (a), (g), (h), and (i) above may be implemented in hardware, provided that the specified control and all other requirements of the function or functions are met.

3.4.3.1.2.2.1 STE processor inputs.- The STE processor shall provide a means of associating the correct range and azimuth data with each output' sample from the A/D converters. The sources of this data are specified in this subparagraph as being a part of the CIM although, at the contractor's option, certain of these circuits may be physically implemented in the STE. In either instance, all information required by the STE processor to perform as specified shall be provided to the processor.

In addition to the two digitized radar videos, the STE processor shall receive range and azimuth words and a test indicator from the CIM. The range word shall have an LSB of no greater than 386 ns and an MSB of at least 1.58 ms for the CD-2A and CD-2C, and 790 us for the CD-2D. The range clock used to generate this range word shall be the same or an integral multiple of, and fully synchronized to, the clock or clocks used to generate the sample gate for the A/D converters. All of the clock signals used in the real-time range or timing processing within the STE, while they need not necessarily be related to a radar nautical mile, shall be derived from a single source and shall operate synchronously. In the event that the range word data is *not an* exact representation of range in nautical miles, the STE processor shall convert the target's range from STE range clock intervals to nautical miles after completing the target detection process. The leading edge of the radar pretrigger shall be the radar range reference and STE range zero shall be declared an integral, but adjustable, number of range clocks after this reference. The range of adjustment of this range preset shall be at least enough to accommodate the pretrigger timing listed in 3.4.2.1.1.2 and the video offsets in 3.4.2.1.1.1. The adjustment shall have a granularity of one range clock and shall be accanplished by simple internal means. An STE range alarm shall be declared when the range clock fails or changes frequency such that an effective error of 0.25 nmi or more would exist at a hypothetical range of 250 nmi. The STE processor shall also monitor the radar pretrigger and declare an STE pretrigger alarm when the pretrigger fails or is more than 2.0 us from its expected position.

The CIM shall contain appropriate azimuth word generation circuitry for the STE. This circuitry may be the same as the similar circuitry in the BRC (3.4.3.1.1.1.6). A separate zero azimuth preset capability shall be provided for the STE azimuth data. The STE azimuth word shall be the basis of all azimuth manipulations in the STE processor.

The STE processor shall receive a test indicator from the CIM to indicate that the digital data from the A/D converters or the CIM is test data.

3.4.3.1.2.2.2 Search target processing.- The STE shall process the digital videos as required in the following subparagraphs to provide completed search target reports to the system data bus.

3.4.3.1.2.2.2.1 Target video processing.- The STE processor shall synchronize the radar videos with the STE range clock for digital radar inputs, and shall verify the range synchronization of the A/D converter data for all other types of radar videos. A range correction shall be able to be added to one video to eliminate any offset which it may have with respect to the other video (3.4.2.1.1.1). The correction shall have a granularity of one STE range clock and shall be selected by simple internal means.

The STE processor shall process the synchronized, aligned videos to remove clutter information and maximize the target information content of the videos as presented by the radar. This processing may, at the contractor's option, include amplitude-quantizing the multi-bit digital videos to single-bit data streams. In the event a quantizer is implemented in the CD-2D, it shall be a clutter adaptive distribution-free type quantizer. This type of quantizer shall also be used in the event that a quantizer is implemented in the CD-2A and CD-2C unless its use precludes meeting any search performance requirements (3.4.1.2.2). In no instance shall the specification of this type of quantizer be interpreted as an alteration or waiver of the range resolution or any other search performance requirement herein.

Alternatively, the amplitude information may be retained and used in the target detection process. In either instance, the characteristics of the target video processing and target detection functions shall be fully compatible and matched to complement each other, and to meet the range resolution, probability of detection and all other requirements established herein.

When quantized input video data are provided, the target video processor shall requantize the A/D output such that only video returns which are at least 50 percent of the peak video amplitude observed last sweep are passed. This fixed clip level feature shall be able to be separately enabled and disabled for each video from the front panel of the maintenance console.

Video returns which are shorter than a selectable threshold shall be inhibited from further processing. The short pulsewidth threshold shall be variable in unit steps from one to at least four A/D converter sample periods or their equivalent when digital radar videos are provided. The threshold shall be adjusted by simple internal means. Video returns which are within two sample periods of the expected radar video target pulsewidth shall be flagged as optimum width returns. Video returns which are greater than a selectable threshold shall have their widths noted and shall be flagged as possible clutter returns. The wide return threshold shall be adjustable by simple internal means from the expected target pulsewidth to at least three times that width in single A/D converter sample periods.

A pulse-splitting technique capable of both resolving- the position of each video pulse to 1/4 of the fixed range bin size and of providing the center of gravity of each pulse shall be included.

The target video processor shall also gate the two videos into a common data stream. This target video crossover gating feature shall have two operating modes: autanatic and manual.

(a) Automatic target video crossover - The STE processor shall automatically select the video source which is to be passed to the target detector. This selection shall be based on the clutter content of the normal or logarithmic-normal (log) video, and shall be able to operate over the full range of the STE. The minimum acceptable selection algorithm shall identify clutter areas as those areas in which wide pulses are received in a pattern which does not represent that of an aircraft. Other algorithms may be utilized upon receipt of written permission from the Contracting Officer before beginning equipment production. Normally, the log or normal video will provide the more

sensitive source of aircraft and clutter returns. Accordingly, this video shall be selected for target detection in all areas where it can provide target data consistent with the specified false alarm rates. Where clutter returns tend to reduce the usability of the log or normal video, the selection algorithm shall select mti video as the source of target data. This selection process shall consider data from the previous two scans as well as the current scan. It shall be implemented in sectors no greater than 2.5 nmi in range by 3.6 degrees in azimuth. Upon startup from conditions where this clutter map data has been lost, the algorithm shall select full-range mti video for two scans or until the clutter map data has been reestablished. The target crossover circuitry shall also include provisions (as established by simple internal means) to select the automatic weather video crossover signal of paragraph 3.4.3.1.2.2.3.3(a) for controlling target video crossover in lieu of the output of the algorithm required above. #

(b) Manual target video crossover - The STE shall also be able to have its target video crossover controlled manually. Normally, automatic crossover shall be used but, when enabled from the front panel of the maintenance console, the automatic mode shall be superseded by a manual selection of the target video. The selection of mti, log (normal) or video suppressed (no video) shall be able to be independently set in each of at least eight, but not more than 16, individual range and azimuth sectors (the exact number depending on the extent of range or azimuth overlapping of any two sectors), as selected from the front panel of the maintenance console. The start-stop range and azimuth values for each sector shall be able to be set (via the front panel of the maintenance console) to any point in the STE's coverage with a resolution of 0.7 degrees and 0.5 nmi or better. Full azimuth coverage (360 degrees) shall be possible for each sector. Automatic video crossover shall operate normally in any area not affected by a manual crossover sector. #

The target video processor shall sense clutter returns such that false data are not generated as the result of transitions into or out of the clutter conditions. The processing shall also retain the target information which may be superimposed on top of the clutter block.

3.4.3.1.2.2.2.2 Search target detection.- The STE processor shall accept the gated target video and associated flags from the crossover selector along with range and azimuth data for use in the processor's target detection algorithm. Using the appropriate pattern recognition techniques, the target video shall be compared in range, azimuth, pulsewidth and, at the contractor's option., amplitude with returns from earlier sweeps such that returns with similar characteristics and which have the spatial relationship typical of an aircraft's return sequence are grouped into a single target report. No video return shall be correlated with, or used in formulating, more than a single target report. When a choice of targets exists for a given return, the return shall be correlated with the most similar target file. A range bin cross correlation technique shall be incorporated to prevent range splits and maintain target detection over range cell boundaries. Each reply that fails to correlate with an existing target file shall cause the formation of an initial target file. The correlation criteria shall be a fixed software function of the detection algorithm and shall not be accessible to operation or maintenance personnel. When more than 50 percent of the replies used in formulating a target report are from the mti video, the resulting target report shall have its mti flag set. Alternatively, the bit shall be set for all targets which are reported in an mti video portion of the STE's coverage. # #

The specific detection algorithm implemented in the STE processor shall be either a sliding window or, at the contractor's option, a type of sequential observer. The azimuth correlation properties of weather clutter shall be used *# to reduce false targets in weather. The sliding window (or sequential observer) leading edge criteria shall be automatically adjusted for false alarm rate control based on a measure of the azimuth (sweep-to-sweep) correlation of both log (normal) and mti video clutter. The target detection algorithm shall use # a fixed range cell technique for allocation of return data in range. All STE processors shall use the same target detection technique. The selection of the target detection algorithm and the video processor characteristics shall be such that the accuracy, resolution, split and false target rates, and the probability of detection requirements of 3.4.1.2 are met or exceeded under the conditions specified in 3.3.1. Any embellishment to the basic target detection algorithm which is required to meet these requirements shall be provided. All fixed parameters necessary to optimize the detector to a radar or target return situation, including the lead and trail edge criteria and, in the case of the sliding window algorithm, the window length, shall be able to be adjusted by # simple internal means. A technique shall be included to measure on a sweep-to-sweep basis the range correlation of detected quantized video returns. The critieria shall be selectable by simple internal means. #

3.4.3.1.2.2.2.3 Search target position bias correction.- The STE processor shall provide for the correction of the position of all search targets to eliminate any positional bias errors introduced by the target detection process. This correction shall be a permanent software parameter which is not subject to operator control. It shall be a single, fixed value, unless the selected target detection algorithm requires a dynamic correction technique to meet the established performance requirements. In the latter instance, the dynamic correction shall be implemented in such a manner that it can be easily modified at such time as the target detection algorithm is modified. The STE shall also, if necessary, transform the target's range from STE range clock intervals to nautical miles as a part of this bias correction process.

# #

3.4.3.1.2.2.2.4 Search run length processing.- The STE processor shall be able to inhibit search targets which have unacceptable run lengths and output those which are of an acceptable run length. An acceptable search target is one which consists of no fewer than SRS returns nor more than LRS returns, where SRS indicates a short run length threshold for search targets and LRS indicates their long run length threshold. The function and operation of the search run length discrimination feature shall be identical to that for beacon except that one of the 16 sectors shall, if enabled from the front panel of the maintenance console, fully cover the mti area as defined by the automatic target video crossover (3.4.3.1.2.2.2.1). The other 15 sectors shall be completely independently controlled. The run length discrimination feature-shall not apply to search strobe or search RTQC test targets.

In addition to run length discrimination, the STE processor shall convert the run length information from the number of returns which makeup the search report to the azimuth extent over which those returns were received.. This azimuth run length shall be provided in all STE output target and strobe reports and shall have an LSB of 0.088 degrees and an MSB of 22.5 degrees.

3.4.3.1.2.2.2.5 Search strobe processing.- The STE processor shall count the number of video returns (aircraft-like echoes or returns) available to the target detection algorithm. The count per sweep shall be made available to the maintenance console for accumulation and display. In addition, the number of returns per sweep shall be compared to a manually adjustable threshold. When the threshold is exceeded, the return data shall be inhibited from the target detector for the remainder of that sweep. Normal inputs to the target detector shall resume after an additional, complete radar sweep with fewer returns than the strobe threshold has passed and been observed. For each sweep or portion thereof in which normal inputs to the target detector are inhibited, an artificial return shall be inserted into the target detector with a pseudo range of 254.0 nmi. The normal search target detection algorithm shall apply to this pseudo target. Any resulting search strobe target shall be reported as specified in 3.4.3.1.2.2.4, with the pseudo range of 254.0 nmi and the detected center azimuth and run length.

The search strobe elimination threshold feature shall be able to be enabled or disabled from the front panel of the maintenance console. The threshold for activating the strobe eliminating function shall be adjustable in increments of 16 from zero to at least 512 by simple internal means.

3.4.3.1.2.2.2.6 Search processing range.- The STE processor shall be able to inhibit the reporting of search targets which are not within a STE-selectable range coverage. The search minimum range shall be variable from zero to at least 32 nmi and the search maximum range shall be variable from zero to maximum STE range. The values shall be separately adjustable in increments of 0.5 nmi or less by simple internal means. Neither function shall affect self-test or RTQC test targets, search strobes, or weather messages.

3.4.3.1.2.2.3 Weather processing.- The STE shall process the digital videos as required in the followrng subparagraphs to provide completed weather messages to the system data bus. The processing shall have sufficient dynamic range to insure that no weather information provided by the radar is lost.

3.4.3.1.2.2.3.1 Weather video processing.- The STE processor shall divide the video processing into two paths (target and weather) immediately after the range synchronization and video offset correction functions described in 3.4.3.1.2.2.2.1. The weather video processing function shall include automatic gain control (agc) to correctly track the varying gain of the radar receivers. The agc shall use a sample window near maximum range of the weather processing function to monitor the noise of each video. The range of the window shall be automatically adjusted as the weather maximum range is adjusted. The window shall be as short in range as possible without degrading the stability of the agc action. The agc algorithm shall account for the differing spectral characteristics of the noise from the mti receiver as compared to that from the log or normal receiver. The agc outputs shall be at least as stable as the single-scan average peak-to-peak voltage of the signals present during the sample window.

The STE processor shall accept either linear normal or logarithmic normal video as its non-mti weather video. The selection of the correct processing function for the available video shall be accomplished by simple internal means.

The STE processor shall have the capability to modify the sensitivity time control (stc) curve which was applied to the radar returns at radio frequencies. A minimum of two compensation curves shall be provided. Each curve shall consist of a minimum of 12 linear segments which are fixed in range and adjustable in slope to form the appropriate compensation curve. The segment ranges and slope adjustments shall be such that videos which have been processed by an stc curve of from R^{-2} to R^{-6} are corrected to a curve of R^{-2} + 1 dB. Control of the segment slopes, curve selection and enabling or disabling of the weather stc compensation function shall be able to be exercised from the front panel of the maintenance console.

The weather video processing function shall also compensate the incoming videos to reduce the weather cancellation effects of the search radar's mti and circular polarization (CP) features. The mti compensation shall always be applied to the mti video, while the CP compensation shall be applied to both videos only when the radar is operating in the CP mode. Each compensation shall be implemented such that the intensity of the video returns is increased by a constant value over the full range of the appropriate video. The compensation values for each video shall be separately adjustable from the front panel of the maintenance console from zero to at least 20 dB in 1 dB steps.

In no instance shall the compensations for stc, CP, or mti affect the stability of the agc action nor shall they, alone or in combination, permit signals within 2 dB of the average peak-to-peak video noise voltage to be declared as weather.

3.4.3.1.2.2.3.2 Weather video integration.- The STE processor shall integrate the processed weather videos in both range and azimuth such that video returns from isolated aircraft or point source targets have a negligible effect on the weather contour function. The compensated weather videos shall be arithmetically averaged over a symmetrical sliding range block which is at least six times but less than ten timesthe radar's pulsewidth in length. The average intensity and the peak-to-peak intensity variation of the individual samples in the range block shall be calculated and stored once every 0.25 nautical mile for each radar sweep. The intensity estimate shall have an LSB of 1 dB and an MSB of 32 dB with respect to the average peak-to-peak video thermal noise.. The variation value shall have an LSB of 4 dB and an MSB of 32 dB. Azimuth integration shall be accomplished by averaging the intensity estimates of each sweep with the values from the corresponding range blocks in an equal number of sweeps on each side of that sweep. From 2 to at least 16 sweeps on each side of the computation sweep shall be able to be used for the azimuth integration function, as selected by simple internal means. Variation data shall not be averaged in azimuth; rather the maximum variations over the range blocks' azimuth integration interval shall be assigned to the compution sweep's range block:;.

3.4.3.1.2.2.3.3 Weather video crossover.- The STE processor shall gate the two integrated weather videos into a common data stream. The weather video crossover gating feature shall be separate from the search target video crossover function and shall have two operating modes: automatic and manual.

(a) Autanatic Weather Video Crossover - The STE processor shall automatically select the video source which is to be passed to the threshold detector. This selection shall be based on the ground clutter content of the normal or log video, and shall be able to operate over the full range of the weather contouring function of the STE. The selection algorithm shall identify clutter areas as those areas in which the average integrated intensity estimate is greater than a value GC and the peak integrated intensity variation value is less than a value CL. The GC, or ground clutter, threshold shall be adjustable from less than two to at least 60 dB in 1 dB steps. The CL, or clutter limit, threshold shall be adjustable from zero to at least 60 dB in 4 dB steps. Both thresholds shall be established by simple internal means. The mti video data shall be used for weather contouring only in areas identified as having an excess of ground clutter. The selection process shall consider data from the previous two scans as well as the current scan. It shall be implemented in sectors no greater than 2.5 nmi in range by 3.6 degrees in azimuth. Upon startup from conditions where this clutter map has been lost, the algorithm shall select full-range mti video for two scans or until the clutter map data has been reestablished.

(b) Manual Weather Video Crossover - The STE shall also be able to have its weather video crossover controlled manually from the front panel of the maintenance console. When enabled, manual weather crossover shall supersede the automatic weather crossover feature. Automatic crossover shall operate normally in any area not affected by the manual crossover function. The manual weather crossover function shall be implemented separate from, but otherwise identical to, the manual target video crossover function of 3.4.3.1.2.2.2.1(b).

3.4.3.1.2.2.3.4 Weather threshold.- The STE processor shall compare the gated, integrated, intensity estimate for each quarter-mile range increment to established thresholds to determine if the increment contains weather clutter of an intensity which is to be reported to the system data bus. There shall be eight separately adjustable thresholds, denoted T1, T2 . . . T8. The T1 threshold shall be the lowest and, thus, the first one exceeded. It shall be able to be set from less than three to at least 60 dB in 1 dB steps. The second threshold, T2, shall be able to be set from zero to 16 dB above T1 in steps of 1 dB. The six remaining thresholds shall bear the same relationship to their next lower thresholds as T2 does to T1. The values for each threshold shall be established from the front panel of the maintenance console. The selection of which threshold to use as a base for comparison and which video data to compare to that threshold shall be as specified in 3.4.3.1.2.2.3.5. However, regardless of the data reporting requirements of 3.4.3.1.2.2.3.5, the areas in which the integrated intensity data (after calibration as required below) exceeds any of the thresholds shall be able to be displayed on the ppi as required in 3.4.3.1.4.1.1(1).

The threshold algorithm shall compare the selected threshold's "front panel" value to the video intensity estimate data as modified by a suitable calibration curve. The calibration curve shall be a linear function which is automatically defined by the STE processor as follows: With a known low-intensity simulated weather signal provided on the non-MTI video, one point on the calibration curve shall be established by entering that known intensity level from the front panel of the maintenance console. The second point defining the calibration curve shall be similarly established by providing a known moderate or high intensity simulated weather signal and entering its intensity from the maintenance console. A minimum of eight points, which then define up to seven segments of the curve, shall be able to be established in this manner.

3.4.3.1.2.2.3.5 Weather data reporting.- The STE processor shall control the comparison of weather intensity data to the established thresholds such that the contour data for selected thresholds are reported on the correct scans, and that the message contents accurately represent the, intensity and location of the weather clutter. The weather data output shall be able to be transmitted every scan or on alternate scans: The data shall also be able to be interlaced such that all of the messages for a given threshold's data'are transmitted in a single scan, or are uniformly divided in azimuth between two or three antenna scans. In addition, the thresholds which are to be reported shall be able to be independently selected. Thus, for example, it shall be possible to configure' the STE to report thresholds 1 and 2 on an alternate scan, three-scan interlace as follows: 010101020202 where "0" indicates that no weather data was transmitted this scan and the numbers indicate the three scans required to transmit the complete azimuth-interlaced contour data for each threshold. This interlace requires 12 antenna scans to completely transmit or update the weather data. A continuous report of a J-scan interlace of these same thresholds would be 111222, while a P-scan interlace, continuous report of all eight thresholds would be 1122334455667788 and so on. The control of interlace, continuous or alternate scan reporting, and the selection of the reportable thresholds shall be exercised from the front panel of the maintenance console.

The STE processor shall also provide for increased azimuth resolution at longer ranges such that an approximately constant resolution is maintained over the entire coverage area of the radar. Two resolutions shall be available; selection of the low or high resolution for each of the eight thresholds shall be able to be separately accomplished from the front panel of the maintenance console. The spacing between adjacent report azimuths as a function of report range shall be as follows:

Range (nmi)	Low Resolution (degrees)	High Resolution (degrees)
0-40	5.6	2.8
40-80	2.8	1.4
80-136	1.4	0.7
136-250	0.7	0.35

The STE shall compare the video intensity estimate data within one-half of the azimuth resolution interval on either side of a given report azimuth with the selected threshold and, if the threshold is equalled or exceeded, the shortest range of this detected weather shall be used as the start range for that weather message. Similarly, the longest range of the detected weather in this azimuth interval shall be used as the stop range.

The STE shall include a weather range discrimination function which inhibits the reporting of those areas between adjacent weather cells which are smaller in range than a selected value. If, for a reportable azimuth, two or more separate weather cells are detected such that the start range of the cell at the greater distance occurs within a selected range interval of the stop range of the closer cell, the stop range of the earlier cell and the start range of the later cell shall be ignored and the greater stop range used in the reported message. These operations shall be able to be chained together over the full weather contouring range to permit the reporting of a storm with small holes (in the range dimension) as a single block of weather. The discrimination value shall be variable from zero to at least 15.5 nmi in 0.5 nmi increments, and shall be adjusted by simple internal means.

3.4.3.1.2.2.3.6 Weather contouring range.- The STE processor shall be able to modify the start range of the weather messages to reflect the detected weather start range or a weather minimum range, whichever value is greater. Similarly, the stop range shall reflect the detected weather stop range or a weather maximum range, whichever is less. The weather minimum range shall be adjustable from zero to at least 32 nmi in increments of 1.0 nmi or less. The maximum range shall be adjustable from zero to the maximum STE processing range in increments of 1.0 nmi or less. Control of the weather contouring range shall be able to be exercised from the front panel of the maintenance console. When the range parameters are adjusted such that the weather contouring function is totally inhibited, that fact shall be reported to the CD-2 system monitor.

3.4.3.1.2.2.4 STE output message contents.- The STE processor shall provide its output data to the system data bus for distribution as controlled by the CIM. The specific formats of the search target report, search strobe report, and weather and STE status messages provided by the STE to the system data bus shall be as defined by the contractor. The messages should resemble the common output message formats given in Table II insofar as possible. The messages must contain at least the following information:

(a) Search Target Report

(1) Test - This bit shall be set if the CIM test indicator was present for one or more of the target's replies.

(2) Message. label - A unique bit arrangement which identifies the message as either an RTQC or a normal search target report.

(3) User bits - The FAA and Air Force user bits shall both be set.

(4) Range - The average range of the individual replies which make up this report. The LSB shall be 1/32 nmi and the MSB shall be 128 nmi.

(5) Azimuth - The average azimuth of the individual replies which make up this report. The LSB shall be 0.022 degrees and the MSB shall be 180 degrees.

(6) Run length - These bits shall represent the azimuth run length of the target as specified in 3.4.3.1.2.2.2.4.

(7) MTI flag - This bit shall be set as specified in 3.4.3.1.2.2.2.2.

(b) Search Strobe Report

(1) Test - This bit shall be set if the CIM test indicator was present for one or more of the target's replies.

'(2) Message label - A unique bit arrangement which identifies the message as a search strobe report.

(3) User bits - The FAA and the Air Force user bits shall both be set in each search strobe report.

(4) Range - The range bits shall be set as specified in 3.4.3.1.2.2.2.5, and shall use the same MSB and LSB as a search target report.

(5) Azimuth - These bits shall represent the same information as those for a search target report.

(6) Run length data - These bits shall represent the azimuth run length of the strobe as specified in 3.4.3.1.2.2.2.4.

(c) Weather Message

(1) Test - This bit shall be set if the CIM indicator was present for more than 50 percent of the video intensity estimates used to formulate the weather message.

(2) Message label - A unique bit arrangement which identifies the message as a final STE weather message.

(3) User bits - Only the FAA user bit shall be set for weather messages.'

(4) Range - The range start and range stop values shall be set as specified in 3.4.3.1.2.2.3.5. The LSB shall be 0.25 nmi and the MSB shall be 128 nmi.

(5) Azimuth - These bits shall represent the report azimuth as specified in 3.4.3.1.2.2.3.5. The LSB shall be 0.022 degrees and the MSB shall be 180 degrees.

(6) Threshold - These bits shall identify which of the eight thresholds is being reported.

(7) Intensity - These bits shall represent the highest intensity estimate in the reported area and shall have an LSB of 1 dB and an MSB of 32 dB.

(8) Variation - These bits shall represent the greatest intensity variation value in the reported area and shall have an LSB of 4 dB and' an MSB of 32 dB.

(d) STE Status Report

(1) STE range alarm
(2) STE pretrigger alarm
(3) Results of the operational self-test
(4) Weather contouring enable/disable
(5) Search run length discrimination status on/off

If the beacon-search correlation is not performed in the BTE, the STE output shall also include the beacon target reports as specified in 3.4.3.1.1.2.10(a).

3.4.3.1.2.2.5 STE self-test.- The STE processor shall routinely test itself, check the test data against established norms and report the results of the check. Two types of testing shall be incorporated into the self-test function: operational and diagnostic.

3.4.3.1.2.2.5.1 Operational self-test.- The operational STE self-test shall operate continuously when the STE is in the normal operating mode, whether the associated CD-2 channel is actually on-line or not. The STE processor shall, via the system data bus, direct the test target generator in the CPM to generate the appropriate test signals to simulate the types and quantities of test targets required to establish that the complete STE is functioning correctly. The formats of these messages to the CIM shall be as defined by the contractor. The test target generator output for these operational self-test functions shall not contain the test indicator signal,' but shall appear as normal, live target data. External search video shall be inhibited for the minimum time necessary to prevent interference with the self-test signals. The test signals provided to the A/D converters, or the digital video input to the STE processor if the A/D converters are bypassed, shall include the following conditions at a minimum:

(a) Video returns with wide, expected, and unacceptably short pulsewidths.

(b) Non-mti video clutter to verify automatic target video crossover.

(c) Simulated aircraft targets which verify the correct operation of the target detection, target position bias correction, and run length processing and encoding functions.

(d) Simulated weather returns which verify the correct operation of the weather video processing, video integration, automatic video crossover, weather thresholding, and data reporting functions.

The operational self-test targets shall be generated as close to the adapted maximum range (target or weather, whichever is applicable) as is possible. The self-test target data shall be capable of being displayed on the maintenance console but shall not be transmitted to the data sets. If the search-beacon correlation is implemented in the STE, the STE self-test shall verify its correct. operation. The operational self-test shall also detect any loss of data as the result of the overflow or failure of any register, buffer, or complete memory system within the STE. processor. Normal adjustments of the STE's parameters such as video crossovers, run length discrimination, maximum or minimum range, weather thresholds and other similar parameters shall not impair the effectiveness or accuracy of the operational self-test. A complete operational self-test cycle shall be completed and the results updated at least once every eight antenna scans for all functions except weather data reporting. The weather data reporting self-test shall be completed and its results updated at least once every complete weather data reporting cycle.

3.4.3.1.2.2.5.2 Diagnostic self-test.- The STE's diagnostic self-test shall be able to be initiated only when the associated CD-2 channel is off-line. The test shall be separate from those of other modules, and shall be manually initiated from the front panel of the maintenance console. It shall include the following as a minimum:

(a) The checks specified in 3.4.3.1.1.2.11.2(a), (b), (c) and (d) for the BTE processor.

(b) Verification of the correct operation of the three search alarm detection circuits in the STE and CIM.

(c) Verification of the correct operation of the search strobe and output message generation functions. The test signals necessary for these tests shall be generated, inserted, and able to be displayed in the same manner 'as the operational self-test target signals.

3.4.3.1.2.2.6 STE status monitoring and reporting.- The STE processor shall monitor the enable/disable condition of the weather contour generator and the results of the operational and diagnostic self-tests, and provide all results to the CD-Z system monitor for formatting and reporting to the maintenance console and the data sets. The status shall be updated within 0.5s of the detection of any change in status. The results of the diagnostic self-test shall be provided to the system monitor within four minutes of the time the test was initiated. .

3.4.3.1.3 Control and interface module.- Each CIM shall contain the circuitry necessary to interface the CD-2 with the non-military equipment listed in Table I. The CIM shall also control the operation of, and flow of information into and out of the other modules in its CD-2 channel. The CIM shall perform the radar interface, system data bus controller, modem adapter, and test target generator functions. The CIM shall also accept signals from a Government-furnished azimuth data converter (ADC) which provides ACP and ARP signals from antenna synchro data. The CIM shall also contain the system monitor for the CD-2 channel; the requirements of the system monitor are specified in 3.4.3.1.7.

3.4.3.1.3.1 Radar interface.- Each CIM shall contain all necessary receivers and drivers for the search and beacon radar interface signals. The drivers shall provide signals with the electrical characteristics specified in 3.4.2.1, and the receivers shall condition the input signals to CD-2 levels. The video receivers shall be ac-coupled and dc-restored to remove any dc bias from the videos. The conditioned videos shall be suppressed during injection of the appropriate RTQC and self-test signals by the test target generator. In the CD-2C, the beacon video shall also be suppressed during the presence of the beacon video suppression signal from the Military interface group (MIG). (This suppression signal originates in the AN/GPA-124 and may occur at any time during the sweep of the beacon radar.) In addition, the beacon video shall normally be suppressed whenever an on-line beacon alarm is presented to the CD-2 by the beacon radar equipment. This suppression feature shall be able to be defeated from the front panel of the maintenance console; when defeated, a conspicuous notation to that effect shall be displayed on the'maintenance console to alert personnel of this nonstandard operating condition.

Each receiver shall also include a driver which provides an isolated output for daisy-chaining or concatenation of the two CD channels to a single signal source and for inserting the CD-2 into an external system without requiring additional signal isolation elements, The receiver-driver combinations used for video signals shall provide isolated outputs which, when measured at the end of 300 feet (92 m) of the appropriate cable type, produce signals which are within five percent of the inputs for all electrical characteristics, including the amplitude characteristic (linear, log, or quantized). The receiver-drivers used for triggers and other pulse-type signals shall provide similar isolated ouputs which, when measured under the same circumstances, produce signals which are within five percent of the nominal value for all electrical characteristics.

'Under these same circumstances, the isolated outputs for either the ACP or IACP signals, as selected by simple internal means, and the ARP signal shall be within five percent of the nominal values specified in 3.4.2.1.1.3.1 for the pulse-type signals. This applies without regard to the type or source of ACPs and ARPs: pulse, sinewave, or ADC output. At least one spare receiver-driver combination of each type utilized shall be provided in each CIM. Provisions shall be included to, by simple internal means, substitute the spare for any similar operational unit to prevent a single failure in the daisy-chain from affecting all succeeding equipment. The isolated outputs shall accommodate any resistive load, including an open circuit, without affecting the input or distributed signals. The isolated outputs at the end of the CD-2's daisy-chains shall be available

for external connection (3.5.2.10). The receivers used for ACP and ARP signals shall incorporate pulse width discrimination circuits to eliminate narrow pulses or spikes which may be present along with the expected signals. The discrimination circuits shall reject signals which do not exceed a selectable pulsewidth threshold. This threshold shall be variable from less than 0.3 microsecond to at least 6.0 microseconds in intervals of 0.1 microsecond or less. The value shall be selectable by simple internal means.

In addition to providing the external isolated outputs, each CIM shall distribute the conditioned videos, triggers and azimuth data within its CD-2 channel.' No externa!, isolated outputs are required for the azimuth synchro data or digital radar input videos. The radar status data inputs shall be distributed to both CD-2 channels without providing external, isolated outputs. There shall be a single, channel-selected output for the search test target pulse and beacon test target pulse signals. Appropriate range and azimuth word generation circuitry shall be included in the CIM if it is not provided in the BTE or STE. Operation of one channel of the CD-2 shall not require the other channel's CIM to be operational.

The CIM shall contain a manual means for inserting corrections to offset search and'beacon azimuth errors caused by antenna alignment or other sources of azimuth error external to the CD-2. Appropriately corrected azimuth data shall be provided by the CIM to the BTE, STE, MIG and maintenance console.

3.4.3.1.3.1.1 Azimuth data generation.- The CD-2 shall incorporate a single-channel Government-furnished azimuth data converter (ADC). The ADC provides a redundant source of ACP and ARP data and is described in 3.13. Along with appropriate power and ground signals, the CD-2 shall provide the radar antenna synchro data directly to the ADC. The ACP and ARP data from the ADC shall be corrected by an azimuth correction circuit to remove any offset which may be present. This correction shall be accomplished in increments of one ACP (0.088 degrees), shall be able to correct any offset, and shall be established by simple internal means. The corrected ADC data shall be distributed to the two CIMs. The corrected ADC data shall be available to an operating CIM regardless of the status of the other CIM.

Each CIM shall include an azimuth data quality monitor which monitors the external ACP and ARP data as well as the corrected ADC data. Normally, the external ACP and ARP data shall be selected for use within the CD-2. Adaptation of the CIM for normal or improved ACPs (IACP) from the external generator shall be accomplished by simple internal means. In the event that the selected number (4,096 or 16,384) of ACPs per ARP are not received, or if an ACP is not received within 5 ms or within 10 percent of the nominal site adapted interval, the external data source shall be declared faulty. In the event that the data from the ADC passes the equivalent tests, the ADC data shall be selected for use. It shall be possible to manually and independently select-the azimuth data source for each CD-2 channel from the front panel of the maintenance console. Regardless of the source selected, the ARP input shall be gated by the ACP signal such that, after the initial synchronization with the antenna, spurious signals on the ARP line are not interpreted as true azimuth references. The ARP input signal shall be interpreted as a true reference only during the ACP interval when it is expected.

The selected azimuth data, if it does not already consist of 16,384 improved ACPs per scan, shall be processed by the appropriate conversion circuitry to. translate the normal ACPs to IACPs for distribution within the CD-2 channel. This conversion shall result in the addition of three IACPs between adjacent ACPs. For an input with a fixed inter-ACP period (i.e., no ACP jitter), these added IACPs shall occur at 25 ±5, 50 ±5, and 75 ±5 percent of'that interval. For each five percent of ACP jitter, the IACP position tolerance shall be linearly increased by five percent, up to a maximum of ±10 percent.

3.4.3.1.3.2 System data bus controller.- The CIM shall contain the controller for the system data bus of the associated CD-2 channel. The controller shall be a microprocessor-based device which directs the flow of information on the system data bus. It and the bus shall be able to transfer information between # CD-2 modules at a rate of at least 400,000 bytes per second. The BTE and STE # shall be given priority access to the bus such that a complete target report is available for transmission from the extractors within 1/64 of an antenna scan. The design of the CD-2 shall minimize the peak loads on the bus as much as possible, consistent with meeting the other requirements herein. The controller shall be responsive to commands from the maintenance console and the system monitor which may change the status of a port on the bus, a module within a channel, or the status of that channel. The controller shall be able to recognize or ignore devices or equipment which may be connected to the system data bus at the external data connector or at any of the internal terminals within the CD-2 channel which may be unused in a particular CD-2 configuration or designated for future processors (3.5.2.1.4). The activiation or deactivation of these ports shall be accomplished by simple internal means.

3.4.3.1.3.3 Modem adapter.- The CIM shall contain an output buffer and a microprocessor which converts the final reports from the system data bus format to the common output format of Table II. The microprocessor shall also control the buffer access, parity generation, and output data channel control functions.

3.4.3.1.3.3.1 Message reformatting.- The CIM shall accept the final target reports, weather messages, and status messages from the system data bus and # transform them to the common output format. The transformation shall take no,. longer than 100 milliseconds in the as-delivered CD-2 configuration. This task # shall be implemented such that the complete reformatting task is controlled by the microprocessor's software on a bit-by-bit basis. It shall be possible, by appropriate software modifications, to alter the location or meaning of any field or bit in the output message format. Similarly a completely different message shall be able to be created, containing any or all of the data available from a particular message or report in its system data bus format. There shall be no restrictions on this ability to redesign the output messates. The CIM shall be able to reprogrammed to provide a serial data output to the RS-449 interface which consists of CD-2 common format messages packaged within the high-level protocol prescribed by the International Organization for Standards in Standard 3309. The CIM shall not, however, hold data in memory awaiting a response from remote equipment acknowledging correct receipt of the data. This requirement to be able to accommodate Standard 3309 shall be interpreted only as an index of the required capability to reformat the CIM's output messages.

Some of the specific functions required to convert the system data bus reports to the common output format are listed below. This is not a complete list and shall not obviate or alter the requirements specified elsewhere herein.

(a) Prepare the correct message label, including the test bit and any control flags, variation bits, and user bits.

(b) Assign the message information to the appropriate message fields and bits within those fields.

(c) Substitute some data for others as controlled by the appropriate flag bits.

(d) Roundoff (not truncate) large data values to conform to message restrictions.

(e) Set all AIMS present and AIMS code bits in the search and beacon messages to zero.

In addition to these requirements, the CIM in the CD-2B shall generate and insert a dummy search RTQC message in the output buffer queue at the correct time (approximately zero azimuth). This message shall be identical in content and priority to that which would have been provided by the STE, if it were present, in response to the search RTQC test signals from the test target generator (3.4.3.1.3.4.1), except that its center azimuth need not be a function of scan rate and radar prf. This message is required to satisfy the RTQC checks performed at the using facilities by automated equipment.

3.4.3.1.3.3.2 Output buffering.- Because of the uneven distribution of the aircraft population and the weather echoes, more target reports and weather messages will be generated at times than the data transmission facilities can accommodate. Accordingly, the CIM shall contain an output buffer for temporary storage of final reports and messages until one of the output data channels is ready to accept another message. All messages shall be transformed to the common output format prior to entering the buffer. The buffer shall use a modified first-in, first-out control algorithm such that all messages with a high priority are transferred from the buffer before any with a low priority. Messages with the high priority shall be validated beacon emergency (codes 7600 or 7700) reports, strobe reports, and search RTQC reports. All other messages shall have the lower priority. The output buffer memory shall include the appropriate control bits to enable the modem controller to implement this priority technique. The buffer shall be able to hold at least.500 common format messages in any proportion. Separate buffer overload and buffer overflow
signals shall indicate the status of the buffer. The overload signal shall be generated by an algorithm that is a function of both the time it takes a message to transit the buffer (see "time in storage" below) and the instantaneous quantity of messages in the queue. Other parameters such as message type shall be considered by the algorithm as well. This algorithm shall be designed to minimize the loss of beacon targets (as contrasted with other low priority targets) under high data generation-

low output capacity conditions. The buffer overflow signal shall indicate when the buffer reaches approximately 98 percent of its capacity. Map messages shall be prohibited from entering the queue when the overload condition is present, and all except status messages shall be inhibited during the overflow condition.

The buffer control algorithm shall keep track of the length of time each message is in the queue, using increments of 125 ms or less. As each message is readied for transfer from the buffer, the time spent in the queue shall be calculated. If this time-in-storage is greater than the value TIS, the mes- # sage shall be declared to be "old data". Such messages shall not be trans- ferred to the data sets nor shall they remain in the buffer. The number of these "old data" messages generated each scan shall be reported to the MC for display on the tabular display. If the time-in-storage is equal to or # less than TIS, the message shall be transferred to the data set with the storage time appended as provided for in the common message format. The TIS value shall be adjustable in increments of 125 ms or less over a range of from less than 0.25s to at least 6.0s by simple internal means.

3.4.3.1.3.3.3 Modem control.- The CIM shall regulate the access of each of the three modem output channels to the output buffer memory. Access shall be implemented such that the data transmission rate of any output channel is not restricted by the CD-2. The throughput of the CD-2 shall be limited only by the capacity of the data transmission facilities. It shall be possible to separately enable or disable any one, two, or all three of the FAA modem output channels from the front panel of the maintenance console. A complete message shall be transferred from the output buffer to a temporary memory associated with an available modem channel as controlled by the output buffer priority algorithm. An odd parity bit shall be inserted at the end of each field in the message before or during this transfer. The data bits shall be provided to the modem as specified in 3.4.2.1.4. The even-parity idle character (Table II) shall be transmitted once between successive messages on a given output channel. It shall be transmitted continuously only if message data are not available for transmission. When more than one output channel is enabled and functioning correctly, the available messages shall be divided approximately evenly between the available outputs with respect to both message type and quantity, except that the CD-2's throughput shall not be degraded by this requirement.

A separate output service alarm shall be provided for each output channel, including the RS-449 channel when it is enabled and operating in the # external clock mode. It shall.be set whenever that channel has not transmited a data bit in response to a modem clock pulse by the time of the trailing edge of that pulse, or when the output channel is otherwise # operational but cannot obtain a new message from the (nonempty) buffer within one field time. In the former instance, and also when an operational data channel is manually disabled or incapacitated by the failure of its modem clock, the message which was interupted shall be retransmitted in its entirety over an operational channel, if any remain. The failure of one or more modem clock signals, including the internal modem clock when the RS-449 interface is enabled, shall generate an FAA modem alarm.

3.4.3.1.3.4 Test target generator.- The test target generator within each CIM shall generate or initiate the generation of search, beacon, and weather test signals for use by the CD-Z channel self-test and FM real-time quality control (RTQC) functions, and by maintenance personnel to verify correct operation and diagnose faults in the CD-2. The test targets shall be available during both on-line and off-line operation. The points of insertion of self-test, RTQC, and internal maintenance test targets as well as the characteristics and quantities of the self-test signals shall be as specified for the operational and diagnostic self-test functions of the BTE and STE. Normal video inputs shall be inhibited only for the self-test and RTQC targets, such inhibition to extend for the minimum time, range and azimuth extent necessary to assure interference-free processing of these targets. 'The characteristics and quantities of the RTQC and maintenance test targets shall be as described in the following subparagraphs.

3.4.3.1.3.4-l Real-time quality control test targets.- The test target generator shall generate two RTQC test targets per scan - one search and one beacon. These targets shall be generated continuously, regardless of the on-line or off-line condition of the associated CD-2 channel. The presence, position and status of both targets shall be continuously monitored and any deviation from the adapted standard values shall be reported to the system monitor as an RTQC alarm for that particular target. The tolerance values shall be as small as possible, commensurate with a requirement for fewer than one false alarm per year of correct operation. The values shall be established by simple internal means and shall have sufficient adjustment range to accommodate the radar prfs and scan times permitted by 3.4.2.1. Unlike the self-test targets which are for internal CD-2 use only, the two RTQC targets shall be transmitted by the on-line CD-2 channel to the using air traffic control facility where further use of the targets will be made.

(a) The search RTQC test target shall be generated by the CIM once per scan at such a range as to insure its transmission from the STE at a range of 1.00 nmi. The first hit shall occur at 0.000 degrees and the last hit at 5.625 degrees. The target's echoes shall be processed in the same manner as any other search target except that the target shall not be inhibited by the minimum range or run length discrimination functions and it shall be reported with the unique search RTQC message label.

(b) The beacon RTQC test target shall be generated by the CIM once per scan at such a range as to insure its transmission from the BTE at a range of 1.00 nmi. The first hit shall occur at 180.000 degrees and the last hit at 185.625 degrees. The target's replies shall have the 13 data code bits (including the X pulse) set to all one or all zeros 'independent of the mode interrogated, except that the X pulse shall be omitted from the mode C replies. The selection of RTQC code "1" or "0" shall be controlled from the front panel of the maintenance console. The SPI pulse shall not be present in the RTQC target replies. The replies shall be processed in the same manner as any other beacon target except that the target shall not be inhibited by the minimum range or run length discrimination functions and it shall be reported with the test bit set.

3.4.3.1.3.4.2 Maintenance test targets.- As controlled from the front panel of the maintenance console, the test target generator shall generate search, beacon and weather test targets for use by maintenance personnel. In addition, the maintenance test targets shall be able to be controlled by external equipment which is connected to the CD-2 external data interface (3.4.2.1.5). The targets shall be available as internal targets in which simulated aircraft or weather replies are injected early in the CD-2 processing chain or as external test target pulses which are available to trigger external radar test equipment. All internal test targets processed by an on-line CD-2 channel shall have the test bit set in their target report messages with a single exception. The single, fixed aircraft target test pattern shall be able to have its test bit reset to permit processing at the using computer facility. This condition shall be controlled from the front panel of the maintenance console and, when the bit is reset, a conspicuous notation to that effect shall be displayed on the maintenance console alerting personnel to this nonstandard condition. The external test target pulses shall be controlled in range and azimuth by the test target generator of the on-line CD-2 channel. The range timing of the two external test target pulse signals shall be referred to the zero range of the respective CD-2 target extractor. The selection of internal or external targets, as well as control of the position, velocity, and quantity of the targets shall be individually accomplished for the beacon, search, and weather targets generated in each CD-2 channel. It shall be possible to generate search-only, beacon-only; both search and beacon targets, or both search and weather replies in either the internal or the external mode. The following maintenance test patterns shall be provided:

(a) Single fixed aircraft target - It shall be possible to generate a single aircraft-type target at a fixed location once per scan. The target shall be able to be set anywhere within the CD-2's range coverage in increments of 1/32 nmi. The azimuth of the first hit shall be able to be set to any value in increments of 0.922 degrees and the number of hits in the target shall be variable in integer values from one to at least 128.

(b) Fixed aircraft target ring - It shall be possible to generate a ring of fixed aircraft-type targets with the same range and run length as, and starting at the azimuth of, the target defined in (a) above. The number of targets per scan shall be able to be set to any value between 4 and 256 (inclusive) in increments of one as selected by the maintenance technician. #

(c) Single moving aircraft target - It shall be possible to generate a single aircraft-type target once per scan which-changes its position in range, azimuth or both from one scan to the next. The positional change per scan shall be able to be selectable in range from zero to 8 nmi in 1/32 nmi increments in either direction, or in azimuth from zero to 256 IACPs in IACP increments in either direction or any #

combination of these displacements, as selected by the maintenance technician. The motion of the target shall be able to be changed without reinitializing the target's position. This target pattern shall be able to be generated either as an internal target in an off-line CD-2 channel, or as an external target when both channels are off-line; This target pattern shall be able to be generated at the same time as (a) or (b) above in an off-line CD-2 channel.

(d) Maximum density aircraft target pattern - It shall be possible, in an off-line CD-2 channel only, to generate a pattern similar to the fixed ring targets in (b) but at multiple ranges. The number of rings and their ranges shall be sufficient to generate at least 800 aircraft targets per scan and shall test the capacity of the CD-2 channel. The characteristics of the fixed ring targets shall be utilized for the targets of this pattern. This pattern shall be able to be generated with the moving target test pattern or the weather test pattern or both.

(e) Weather wedge - It shall be possible to internally generate a single range and azimuth sector wedge to simulate a weather area. The start range and azimuth of the sector shall be able to be set to any location within the STE's weather coverage with a resolution of at least 1/32 nmi and 0.022 degrees. The range extent shall be adjustable from one nautical mile to 128 nmi in increments of 0.5 nmi and the azimuth width shall be selectable to any IACP value from 32 to 4096 in increments of 16 IACPs as selected by the maintenance technician. The amplitude and amplitude variation over the sector shall be those of one of eight front panel-entered sets of values. These 16 values shall be adjusted by simple internal means and shall be adjustable from zero to at least four volts. The selection of the desired set of values and all other features of the weather test signal shall be able to be accomplished from the front panel of the maintenance console. The external weather test signal shall be the search radar test target pulse with the start range, azimuth and azimuth width as established for the internal weather test signal. The weather test pattern shall be able to be generated at the same time as any other pattern.

The beacon replies for the aircraft target patterns described above, when operating in the internal mode, shall be generated in accordance with the operational mode interlace ratio and shall have separately adjustable codes for Modes 2, 3/A, and C. Any permissible code including the X and SPI bits, shall be able to be set for internal beacon test targets. The codes for the moving target shall be able to be set independently from those of any other pattern. For at least the single fixed aircraft pattern, it shall be possible to individually adjust the framing pulse spacing and code pulse position, and to alternate the selected code for each mode with that of target pattern (c) to demonstrate the code validation function. The range of adjustments shall be sufficient to verify the proper operation of the BTE and BRC (3.4.3.1.1.2.11.1). The external beacon test target pulse shall be a single pulse at the range and azimuth of the target's F1 pulse.

3.4.3.1.3.5 CIM self-test.- The CIM shall routinely test itself, check the test data against established norms and report the results of the check. Two types of testing shall be incorporated into the self-test function: operational and diagnostic.

3.4.3.1.3.5.1 Operational self-test.- The operational CIM self-test shall operate continuously when the CIM is in the normal operating mode, whether the associated CD-2 channel is actually on-line or not. As a part of the self-test, at least ten dummy targets per scan shall be injected into the modem adapter via the system data bus. After they have been successfully reformatted, the pseudo targets shall be entered into the output buffer. The self-test targets shall be identified with a special tag which permits the targets to be accessed by the output data channel circuitry and transferred to a separate register for analysis in lieu of transmission to the users. The self-test targets shall be cycled through the output buffer such that all memory locations are checked at least once every 15 minutes. The self-test targets shall have sufficient variety and frequency so as to check the reformatting functions specified in 3.4.3.1.3.3.1 at a minimum. The self-test targets generated for and successfully passed by the BTE and the STE shall be utilized for the CIM self-test if they meet these requirements. The operational self-test shall monitor the azimuth generation circuitry and separately report external azimuth and internal ADC alarms to the system monitor as "azimuth" and "synchro" alarms respectively.

The operational self-test shall also detect any data lost as the result of the overflow of failure of any register, buffer, or complete memory system within the CIM. Normal adjustments of test target generator or other parameters shall not impair the effectiveness or accuracy of this function. A complete CIM operational self-test cycle, -less the output buffer portion, shall be completed at least once every four antenna scans. The CIH status shall be provided to the system monitor and shall be updated within 0.5s of the detection of any change in status.

3.4.3.1.3.5.2 Diagnostic self-test.- The CIM's diagnostic self-test shall be able to be initiated only when the associated CD-2 channel is off-line. The test shall be able to be manually initiated from the front panel of the maintenance console and shall present its results to the system monitor within four minutes after the test was initiated. The self-test shall include the following at a minimum:

(a) The checks specified in 3.4.3.1.1.2.11.2(a), (b), (c), and (d) for the BTE processor.

(b) Verification of the modem control, time-in-storage, and "old data" inhibition functions.

(c) Verification of the correct operation of the buffer and output service alarms.

3.4.3.1.4 Maintenance console.- The CD-2 shall include a single maintenance console (MC) which shall serve as the primary interface for the CD-2 operators and maintenance technicians. All operational capabilities and the major maintenance functions and operations of the CD-2 shall be able to be initiated or' controlled from the front panel of the maintenance console. The system data bus of the appropriate CD-2 channel shall be used to transfer the data necessary for these actions between the maintenance console and the applicable module (BTE, STE, CIM, or MIG). The MC shall contain a plan position indicator (ppi) and a random access ppi (rappi) to display video data from external radar equipment and from various stages within the CD-2 processing chain. A tabular display shall be provided for temporary (volatile) display of digital data, including selected output messages and test results. A printer shall be included to provide a permanent record of this data. At the contractor's option, the MC may be utilized to house the Government-furnished azimuth data converter unit, providing that the ADC is functionally incorporated into, and powered by the CIMs. The maintenance console's display and maintenance features shall be considered as off-line or nonoperational functions of the CD-2. However, the operational control features of the MC shall be considered to be a part of the on-line, operational CD-2 equipment

3.4.3.1.4.1 Plan position display.- The MC shall incorporate a plan position display which shall operate in the ppi or rappi modes or a combination of both as controlled from the front panel. Data from external radar equipment as well as from the CIM, BTE, STE, and MIG which are required for operation and maintenance of both channels of the CD-2 shall be able to be displayed. In the ppi mode, the display shall provide an accurate visual indication of the range and azimuth of selected real-time radar videos and synthetic video data generated within the CD-2. The ppi data shall be displayed in real time or near-real time (less than 0.1 second delay). In the rappi mode, the extracted target data shall also be able to be accurately displayed in range and azimuth. The rappi data shall be displayed as data is made available to the maintenance console from the system data bus and the output channels. Data from

only one CD-2 channel shall be able to be displayed at a time, as controlled from the front panel.

The display shall be oriented such that zero azimuth occurs at the 12 o'clock position and zero range is located at the center of the display. The full-scale display range shall be 256 nmi. The scale factor shall be selectable to yield at least the following display ranges: 0-256, 0-128, 0-64, 0-32, 32-96, 64-128, 96-160, 128-192, 160-224, and 192-256 nmi. The scale factor may be continuously variable or, alternatively, an enlarged range-azimuth area may be displayed at the appropriate scale. In any event, the scale of the plan position display shall be displayed on the tabular display (3.4.3.1.4.2). It is permissible to have the display terminate up to 1/32 nmi before reaching the indicated maximum range of each display scale. In the ppi mode, range markers at 10 nmi intervals shall be provided. The timing accuracy of the range marks shall be ± 0.1 nmi or greater. The markers at 50 nmi and multiples of 50 nmi shall be intensified with respect to the remaining markers as adjusted by a simple internal control. An electronic cursor shall be provided in both the ppi and rappi modes to, at a minimum, establish the run length discrimination and video crossover sectors in the ppi mode and to select targets for analysis in the rappi mode. The cursor shall also be used for any other similar positional input or selection function which is not listed here but is required elsewhere herein. The cursor shall be approximately the size of a rappi symbol, shall have separate brightness and on-off controls, and shall be positioned by a trackball or joystick located on the front panel of the plan position display. When enabled, the cursor shall not flicker discernably at any brightness setting. Display scale, the brightness and on-off controls for the cursor and range markers, and all of the functions described in the following subparagraphs shall be controlled from the front panel of the maintenance'console unless otherwise specified.

The preceeding subparagraph assumes the use of a scale expansion'technique in'which a particular range is collapsed to (and displayed at) the origin (center) of the display and the suceeding ranges are displayed at a magnified scale. For all such displays which start at a range other than zero, a distortion of the displayed area will occur because of the collapsing feature. Accordingly, the contractor may, at its option, choose to implemerit the required expansion capability by magnification of a selected range-azimuth area to the equivalent scale factor as would result from implementation of the technique described above. The area to be expanded shall be centered on the cursor. When the expansion requirement is met using this technique, the scale factor shall be displayed in a form which shows the location of the displayed area with respect to the origin (in nautical miles and degrees to the nearest unit), and the applicable scale factor (to the nearest nautical mile per inch). Thus, the scale factor for a hypothetical display setting would be displayed: 104 nmi, 43 deg, 7 nmi/in. When the other expansion technique is used, the scale factor shall be displayed by identifying the start and stop ranges of the display to the nearest nautical mile (e.g. 160 to 224 nmi).

3.4.3.1.4.1.1 Plan position indicator mode.- In the ppi mode of operation, any of the videos or processor data identified below shall be able to be-displayed as selected by individual front panel controls. Any combination of these signals shall be able to be displayed simultaneously, limited only by the requirement for no fewer than three digital-to-analog (D/A) converters to transform the digital videos to a form suitable for display. If more digital videos are selected for display than can be processed by the D/A converters provided, a notation to that effect shall be conspicuously displayed on the front panel of the MC. The ppi may, at the contractor's option, digitally combine the selected videos and provide the composite video or videos to one or more D/A converters, provided that all other requirements herein are met.

(a) External videos - Up to four analog videos from external radar equipment may be provided to the CD-2 for display purposes only. The MC's display shall accept at least four videos directly from the external equipment (bypassing the CIMs), condition them to CD-2 levels and present them for display. The maximum electrical characteristics

(Blank)

will be as described in 3.4.2.1 for the search and beacon videos. Two of the video inputs shall accept videos which are synchronized with the search radar associated with the CD-2. The remaining video inputs shall be able to individually accommodate videos which are synchronized with either the search radar or the beacon radar associated with the CD-2. Selection of the display timing for these videos shall be individually made by simple internal means. All external videos shall be applied to individual slicers which are individually controlled from the front panel of the MC. The voltage level which a video must exceed before it is able to be displayed shall be established by its slicer such that the display can be adjusted to black, white, or any intermediate point. Selection of which of the four external videos. are to be displayed shall be made individually from the front panel.

(b) CD-2 input videos - The beacon, search mti and search log (normal) videos provided to the CD-2 for processing shall be able to be independently monitored as they are distributed within each channel after conditioning in the CIMs. The CD-2D's search radar videos may be analog or digital as described in 3.4.2.1.2.1. The three videos from the selected channel, including the analog equivalent of the digital videos, shall be subjected to separate slicers which operate and are independently controlled as described in (a) above.

(c) Target mti and target log (normal) videos - The full-range target mti and target log (normal) videos as they exist immediately before the video gating of 3.4.3.1.2.2.2.1 shall be available for individual display.

(d) Gated target video - The gated search video as applied to.the search target detector shall be available for display.

(e) Target crossover data - An outline defining the boundaries between the target mti and the target log (normal) videos in the gated video shall be available for display.

(f) Weather mti and weather log (normal) videos - The full-range weather mti and weather log (normal) videos as they exist immediately before the video gating of 3.4.3.1.2.2.3.3 shall be available for individual display.

(f') Gated Weather Video - The gated search video as applied to the weather threshold processor shall be available for display.

(g) Weather crossover data - An outline defining the boundaries between the weather mti and the weather log (normal) videos in the gated weather video shall be available for display.

(h) Beacon bracket data - The bracket detection information provided by the BRC (3.4.3.1.1.1.2) shall initiate the generation of a pair of pulses for each detected bracket. These pulses shall be approximately 0.5 us wide and 20 us apart (to simulate the framing pulses of the reply) and shall be available for display.

(i) AIMS input data and USAF map outline - Provisions for the separate display of these two signals from the MIG shall be included in all CD-2 displays. The signals shall be as defined in 3.4.3.1.5.

(j) In-process and completed target data - These signals shall be separate synthetic videos based on the target detection processes within the BTE and STE. When a valid target file is established in, for example, the BTE for a beacon target, a pulse which is approximately 0.5 us wide shall be generated at the target's range and within one sweep in azimuth. This in-process signal shall be generated as long as the target file remains active. When the target detection process has been completed and the detected target's file is removed from the target detection algorithm, a second synthetic video shall be generated. This completed data shall consist of a single pulse per target, that is approximately 20 us in width, and which is displayed starting at the target's range within one sweep of the target's completion. Together, the in-process and complete data display for a correctly detected target shall appear as a single arc, with the approximate run length of the target, which terminates in a short range strobe or flag. Separate in-process and complete data shall be provided for the BTE and the STE. All four data signals shall have separate front panel controls.

(k) Run length discrimination sector outline - Separate outlines shall be generated and available for display for the run length discrimination sectors of the BTE and the STE, whether the particular discrimination function is enabled or not, In addition, a numerical indication of the minimum and maximum thresholds in each sector shall be displayed in a corner of each sector or, at the contractor's option, in a tabular display (3.4.3.1.4.2).

(1) Weather threshold contours - A separate contour outlining the areas in which the video intensities meet or exceed the particular threshold shall be individually available for display for each of the eight weather thresholds. These iso-intensity contours shall be continuously available without regard to the data reporting requirements of the weather message output. It is permissible to perform the range integration and threshold comparisons necessary to generate all eight contours at approximately 8.3% degree intervals rather than every sweep. With this design, however, the displayed contours shall be extended in azimuth to completely fill thfs azimuth interval, so the contours will have the appearance of continuous outlines of the weather which exceeds the thresholds (with the exception, of course, of possible range discontinuities at the edge of the intervals).

(m) Refresh area outline - An outline of the area selected for the 'refreshing of rappi symbols shall be generated and available for display regardless of whether the refresh mode is enabled or not.

All of the GD-2 videos, (b) through (m) above, shall 'be displayed with the correct relative range and azimuth relationships. They and all other display signals unique to the ppi mode of operation, including range markers, shall be controlled by a master ppi brightness control from the front panel.

3.4.3.1.4.1.2 Random access ppi mode.- In the rappi mode of operation, processed target reports, weather messages and other digital data from the BTE, STE, CIM, and MIG shall be able to be displayed in a rappi format. All rappi data shall be displayed at their correct positions with respect to the ppi data. Two distinct types of data shall be able to be displayed. The first type is the preliminary and final weather and target reports and all other data available on the system data bus which are capable of being displayed in a range-azimuth rappi format. This includes self-test target information. It shall be possible to select the type of bus data which is to be displayed. This shall be accomplished by selecting the source and any other appropriate characteristics of the data. For instance, if the STE does the search-beacon correlation, preliminary beacon reports would be available from the BTE and final beacon reports would be available from the STE.

The second type of data shall be the operational messages provided to the FAA and, if applicable, the USAF data channels. These data shall be the actual output data from the on-line CD-2 channel or the equivalent data from the off-line channel and shall be presented to the rappi at the rate they are presented to the phone line output circuits. Provisions for the selection of all FAA data (from the CIM) or all USAF data (from the MIG) shall be included on the front panel. It shall be possible to display the number of any "old data" (3.4.3.1.3.3.2) not provided to the modems by the CIM or MIG. If the combination ppi-rappi mode is not selected, it shall be possible to display system data bus and data channel output information simultaneously.

A separate rappi brightness control shall be provided. It shall control all displayed information except the cursor and ppi data, which have separate controls. All three controls shall act independently and shall be able to vary their data from a fully extinguished condition to full brilliance.

3.4.3.1.4.1.2.1 RAPPI symbols.- Any combination of the symbology specified below shall be able to be displayed alone or together, limited only by the capacity of the output data circuits and the operational CD-2 equipment. Each symbol, except the emergency display which shall always be enabled, shall be selected for display by individual front panel controls. When a symbol generation conflict occurs because of the enabling of multiple symbol types and because of the presentation for display of a message which qualifies for more than one of those symbols, the display priority shall follow the order given below:

(a) Emergency beacon (⋈) - This symbol shall be displayed whenever a validated emergency beacon report is presented to the rappi.

(b) AIMS (✳) - This symbol shall be displayed for any search, beacon or AIMS-only report in which the AIMS present bit and at least one AIMS code bit is set.

(c) Beacon bomarc (⊠) - This symbol shall be displayed for any beacon report with a validated Mode 2 "X" bit, Mode 3/A "X" bit, or both. It shall also be possible to have this-symbol displayed for beacon targets which meet other criteria (3.4.3.1.7.3).

(d) Search-reinforced beacon (⊠) - This symbol shall be displayed for any beacon report which has its search radar-reinforced bit set.

(e) Mode 3/A beacon (⊞) - This symbol shall be displayed for any beacon report with a validated Mode 3/A code.

(f) Mode 2 beacon (⊡) - This symbol shall be displayed for any beacon report with a validated Mode 2 code.

(g) Mode C beacon (⊖) - This symbol shall be displayed for any beacon report with a validated Mode C code.

(h) Any beacon (□) - This symbol shall be displayed for any beacon target.

(i) Search (X)- This symbol shall be displayed for any search target report, including the search RTQC target.

(j) Low intensity weather (—) - This symbol shall be displayed twice at the azimuth contained in each low intensity weather message, once at the start range and once at the stop range.

(k) High intensity weather (|) - This symbol shall be displayed twice at the azimuth contained in each high intensity weather message, once at the start range and once at the stop range.

(l) Strobe (⧗) - This symbol shall be displayed for both beacon and search strobe reports.

(m) Height finder (⧖) - This symbol shall be displayed for each height report. It shall be displayed at zero azimuth with a range as follows:

Type of Request Which Initiated Report	Value of LSB of Request Number	Displayed Range
No Action	0	0 nmi
No Action	1	255 nmi
Height	Don't Care	128 nmi

(n) Military map (H) - This symbol shall be displayed twice at the azimuth contained in each military map report, once at the start range and once at the stop range.

(o) Spare symbols - At least three symbols shall be provided for future use. They shall be displayed in response to the following common format message label fields: (Note: "X" denotes a don't care condition in which either a one or a zero is permitted.)

Message Label	Symbol
X000000001XXX	卌
xoooooooooxxx	I
X000011000XXX	Da

The first two symbols are for future weather messages and shall be displayed twice per message as specified for the weather and military map symbols. The third symbol shall be displayed at the range and azimuth denoted by the data in fields two and three of the as-yet undefined common format message, using the same interpretation as that used for beacon, search and other similar messages.

(p) All Targets (•) - This symbol shall consist of a distinctly visible dot and, when enabled, shall be displayed for any target or message which could be represented by one or more of the other symbols, providing that the other symbol or symbols are not enabled.

All symbols, except for the target dot, shall be approximately equal in height and width. These dimensions shall be at least 0.125 inches (3.2 mm) but not greater than 0.30 inches (7.6 mm). The target dot shall not be larger than 0.05 inches (1.3 mm). The rappi symbol size shall be independent of the plan position display's scale.

3.4.3.1.4.1.2.2 RAPPI refresh.- A display refresh capability shall be included with the rappi. The area to be refreshed shall be defined by a single sector, the-start and stop range and azimuth values of which-shall be able to be set anywhere in the rappi's coverage with a resolution of 0.7 degrees and 0.5 nmi or better. The refresh sector shall be established and the refresh function controlled from the front panel. When enabled, all of the symbols which are presented for display and which are within the sector shall be refreshed for a selectable period of one, two, three, or four scans. Targets which are more than one scan old shall be displayed at a brightness which may be reduced from that of all other rappi symbols, as controlled by a simple internal adjustment. At least 100 targets (current and history) shall be able to be refreshed. If more than the designed number of targets are presented to the refresh circuitry, a suitable notation to that effect shall be conspicuously displayed on the front panel. The refresh shall be accomplished at such a rate as to not cause discernible flicker, regardless of the number of targets refreshed. The refreshed symbols shall be cleared by disabling the refresh function.

3.4.3.1.4.1.3 Plan position display type and quality.- The plan position display shall have a circular viewing area for use as a ppi and a rappi that has a useable diameter of at least 11 inches (28 cm) but not greater than 18 inches (45.7 cm). Although the following subparagraphs assume the use of a round cathode ray tube (crt) as the display vehicle, other display techniques are permitted providing that they are able to meet or exceed all of the applicable performance requirements in this specification.

(a) The crt shall be a round, magnetically deflected, electrostatically focused tube with a usable diameter of at least 16 inches (41 cm) but less than 21 inches (53 cm). At the contractor's option, a rectangular tube providing the equivalent viewing area and performance may be utilized. In either event, the tube shall have a focused spot diameter of 0.035 inches (0.9 mm) or less at any position on the useable portion of the display surface. Front panel focus correction shall be provided if necessary to meet this requirement. The crt shall provide a clear intensity-modulated display of the radar data and other information specified herein. The electron beam shall be able to be deflected from any position on the crt face to any other such position with the beam settling to within ± 0.1 percent of the useable display diameter within 90 us. The radius of curvature for the faceplate shall be 60 inches (1.5m) or more. A P7-type phosphor or one which has a longer persistance and meets the other requirements herein shall be provided.

(b) The output brightness shall be sufficient to permit easy viewing of all data types from the normal viewing position under ambient lighting conditions of up to 60 footcandles (646 lux). A minimum brightness of 25 footlamberts (86 cd/m^2) shall be attained when measured as specified below. Controls and circuitry which establish the baseline intensity and provide automatic blanking of the crt shall be provided. The crt shall be blanked for all off-screen deflections, and for all conditions in which deflection is lost, including power on, off, and transient conditions. Adjustment of any or all brightness controls to full brilliance shall not cause damage to the crt or its phosphor. A contrast ratio (as defined below) of 4:1 or more shall be attained. Shielding or filtering of the display faceplate, if required to meet this requirement, shall be provided.

(c) The persistance of the display shall be such that rappi symbols can be readily perceived on the display under the same ambient lighting conditions as specified for brightness, without reducing the readability of ppi data because of smearing as the data changes from one scan to the next.

(d) Brightness, spot size and persistance measurements shall be made using the square (any beacon) rappi symbol when it is being generated at the rate of 69 times per second (or at the rappi refresh rate, whichever is lower) at any single location on the display, unless otherwise specified herein. The measurements shall be made with the crt bias adjusted for normal, baseline operation, with the rappi intensity control at mid-range, with the ambient room light intensity at 60 footcandles (646 lux) and with all faceplates and filters, if provided, in place. A Spectra Spot brightness meter or equivalent shall be used with the acceptance circle set to six minutes (0.1 degree). The contrast ratio is defined as the brightness with the symbol on divided by the brightness one minute after turning it off. It shall be measured under the same conditions as the brightness measurement. The spot size shall be measured with the brightness adjusted to 15 footlamberts (51 cd/m^2) or more and shall be made at the display center and at approximately 90 percent of its radius. The spot size shall be measured as the width of an edge of the symbol. The spot size, brightness, and persistance shall be such that all symbols are legible and discernible one from another at any displayed position when viewed from the normal viewing position.

(e) The crt face shall be protected by a suitable implosion shield with a thickness of at least 0.25 inches (6.4 mm). It shall be optically clear such that it does not degrade the quality of the display.

3.4.3.1.4.2 Tabular display.- The maintenance console shall include a tabular display for the display of alphanumeric digital data not amenable to ppi or rappi presentation. The tabular display shall be a separate display on the front panel of the MC or, at the contractor's option, it may be superimposed on the ppi-rappi plan position display. If the latter option is chosen, the tabular display shall occupy not more than ten percent of the useable plan display's area, shall have separate enable-disable and intensity controls, shall be able to be relocated to any point on the larger display via that display's cursor, and shall be easily readible from the normal viewing position.

The tabular display shall include an integral time-of-day code generator, the output of which is continuously displaye'd in the six-digit, 24-hour format, with a one-second resolution. The clock shall utilize an internal frequency standard with an accuracy of ±0.01 percent or better, and shall be able to be stopped, set and started from the front panel of the maintenance console. In addition'to the clock, the tabular display shall, at a minimum, be able to present the following data:

(a) The complete contents of any target report, weather message, self-test target or other similar information which is available on the system data bus and which is being displayed on the rappi. The targets and other rappi data to be analyzed on the tabular display shall be selected by use of the plan display's cursor. Any rappi symbol, including all refreshed symbols, shall be' able to be selected for tabular display as it is being displayed on the rappi.

(b) The complete contents of any of the output messages provided to the data sets by the CIM or MIG or both which are able to be displayed on the rappi. Selection of these messages for tabular display shall be accomplished in the same manner as for the messages in (a) above.

(c) The complete contents of all beacon strobe, search strobe, or emergency beacon reports (as selected by a front panel control) regardless of the cursor position or mode of the plan position display.

(d) The complete contents of the BTE, STE, CIM, MIG, and MC status reports resulting from operational and diagnostic self-tests, as they are presented to the system monitor via the system data bus.

(e) The complete contents of the status messages provided to the data sets by the CIM, MIG, or both.

(f) The range scale and operating mode of, and the CD-2 channel (and module for rappi data) which is providing data to, the plan position display.

(g) The range and azimuth of, and the minimum and maximum run length values for, all of the beacon and search run length discrimination sectors, if such data is not displayed on the ppi inside each sector.

(h) The results of the data analysis tests described in 3.4.3.1.7.3.

(i) The status data which is to be conspicuously displayed to operations and maintenance personnel, if not presented by other means.

The tabular display shall be able to simultaneously display at least two of the messages identified in (a), (b), or (c) above in any proportion. A method of controlling which display location is to be updated by the new message shall be provided. The display shall be able to present a single message in its entirety from those listed in (d), (e), (g), and (h) above. The information of (f) shall be continuously displayed regardless of the other uses being made of the tabular display. The information of (i), when available, shall always be displayed. It shall flash approximately once every second if the tabular display is implemented on the plan position display or if its characters are less than 0.5 inches (1.3 cm) high. The tabular display shall be able to be cleared by a simple front panel control. .

The contents of the messages identified in (a), (b), or (c) above shall be displayed in an easily readable form: Message category (normal, RTQC, or test) and message type (beacon, search, status, etc.) shall be indicated by the appropriate letters; other information in the message label (beacon 'code validation, map variation, users, etc.) shall be indicated by the appropriate alphanumeric characters after the message type characters;
range shall be displayed in nautical miles and 1/32's of a nautical mile;
azimuth shall be given in IACPs, ACPs, or in decimal hundredths of degrees (as #

controlled by a front panel control); run length, time-in-storage, and beacon code shall be presented to the resolution contained in the message; and other data such as parity status, AIMS data, and beacon discrete and X-pulse data shall be displayed by separate, simple, encoded digits. Each datum shall be displayed following an appropriate header (RNG, AZ, etc.) or, where positive identification is impractical, shall be identifiable by its constant position relative to other data being displayed. Beacon codes shall be displayed in octal for Modes 2 and 3/A and in decimal hundreds of feet for the Mode C reported altitude. The octal representation for Mode 3/A shall be in standard ABCD form. The displayed Mode 2 code shall be derived from the Mode 2 reply bits using the following bit groupings: A1,C1,D4; C4,A2,C2; D1,B1,A4; B4,D2,B2.

The data identified in (d), (e), (f), (g), and (h) shall also be displayed in a readily intelligible form. No more than three functions shall have their reported status encoded into a single displayed character; all such functions shall be related to each other (for instance, the status of the three FAA output channels).

The format of all data displayed on the tabular display shall be developed by the contractor and approved by the Government before equipment production is begun. The intent of these requirements is to provide the operation and maintenance personnel with a useful display which is easily read and, therefore, less likely to cause interpretive errors.

3.4.3.1.4.3 Printer.- The maintenance console shall contain a printer capable of providing a permanent record of the entire contents of the tabular display. The printed format shall conform as much as possible to that of the tabular display, except that datum headers are not necessary if the printed datum is located at the same position relative to the printed message as the tabular datum is to the tabular message display. The printed output shall include the time-of-day clock data at the top of the data block. It shall be possible to print one or both of the target messages available from the tabular display. The printer format shall be developed by the contractor and approved by the Government before equipment production is begun.

The printed copy shall be legible and remain legible for at least ten years. The printer shall meet the requirements of paragraph 5.2.6.3 of MIL-STD-1472, # except for the take up device and annotation requirements of paragraphs 5.2.6.3.4 and 5.2.6.3.6 respectively. Provisions for' automatic printing as # the contents of the tabular display are updated, automatic printing of either or both of the RTQC targets or the common format status message, and manual initiation of the print function shall be included. Operation of the printer shall be by front panel control. The most recent data shall be readable without manually advancing the printer. The printer shall be capable of printing at least 50 common output beacon message per minute.

3.4.3.1.4.4 Data entry devices.- The maintenance console shall include on its front panel all of the controls and devices required to provide the routine operational and maintenance control of the CD-2. The contractor, using the human engineering practices prescribed in 3.5.2.1 herein and MIL-STD-1472 as a guide, shall design the front panel of the maintenance

console and its data entry devices for clear and logical interpretation and operation. Data entry devices in this context include potentiometers, switches, trackballs, joysticks, pushbutton, and keyboards. In the event that a keyboard is utilized to control a function such as printer "on-continuous", rappi symbol display selection or weather threshold calibration, appropriate readback shall be provided to inform the operator of the condition of the function. This readback, which takes the place of observing a switch position, shall be provided for all such functions controlled by the keyboard. The tabular display may be used for such readback. The layout and functional operation of the data entry devices on the MC shall be designed by the contractor and approved by the Government before equipment production begins.

3.4.3.1.4.5 MC self-test.- The maintenance console shall be able to test itself, check the test data against established norms and report the results of the check, if appropriate, on the tabular display. Al 1 tests shall be able to be manually initiated from the front panel.

3.4.3.1.4.5.1 Plan position display self-test.- The ppi video and data inputs shall be able to be tested by injecting an internally-generated test waveform with a frequency of approximately 10 kHz into each input individually. The waveform shall be such that the correct action of the slicer associated with the applicable video input can be observed on the display. Simulated range and azimuth data shall be available within the MC to check operation of the display in the ppi and the rappi modes. A capability to generate any type of digital data input received from the system data bus or the CIM or MIG output buffers shall be provided to test the rappi display. All rappi symbols, and their refreshment, shall be able to be tested using internally-generated test message inputs.

3.4.3.1.4.5.2 Tabular display and data entry device self-test.- In the event that the tabular display is implemented separately from the plan position display, a lamp-test-or equivalent exercise of all of the-display's output elements shall be provided. Using the tabular display, the correct operation of the keyboard and any other similar data entry device shall be able to be demonstrated.

3.4.3.1.4.5.3 Diagnostic self-test.- Upon manual initiation from the front panel, the maintenance console shall perform an automatic self-test which includes the following at a minimum:

(a) The checks specified in 3.4.3.1.1.2.11.2(a), (b), (c) and (d) for the BTE processor.

(b) Verification of the ability of the printer to correctly print each character in its vocabulary in each appropriate column.

The results of this test shall be available on the tabular display or the printer within four minutes after initiation of the test.

3.4.3.1.5 Military interface group.- Each CD-2C shall contain a single channel MIG, through which all connections between the USAF equipment and the CD-2 shall be made. It shall interface with the CIM and the system data bus of the on-line CD-2 channel, with the CD-2's maintenance console, and with the Military equipment listed in Table I. Operation to a range of at least 250 nmi shall be provided for all functions. The MIG shall perform the following processing functions using micro-processor implementations to the greatest extent possible:

(a) AIMS processing
(b) USAF ppi data generation
(c) Height finder radar data processing
(d) Military message processing
(e) Self-test and status processing

3.4.3,.1.5.1 AIMS processing.- The MIG shall provide the interface with the AN/GPA-124 coder-decoder as specified in 3.4.2.1.6.1, and shall perform the AIMS target detection and output message generation functions using the data provided by the GPA-124.

3.4.3.1.5.1.1 AIMS timing.- The MIG shall receive azimuth and 'range timing information from the CD-2's CIM and, for staggered operation, from external radar timing equipment. The timing data derived from 'this information shall be distributed within the MIG for use in 'the detection of AIMS targets.

(a) Azimuth - The MIG shall accept the selected IACP/ARP data 'from the on-line CIM and accumulate the AIMS azimuth position in a 14-bit counter or equivalent azimuth word generator. The counter shall be
reset upon receipt of the ARP. The eight most significant 'bits of the
counter shall be provided to the GPA-124 as dc levels which change with azimuth. The value of the MSB shall be 180 degrees. An AIMS azimuth
alarm shall be indicated if there are not exactly 16,384 IACPs per ARP.

(b) 'Operation with a nonstaggered beacon radar - The MIG shall receive the nonstaggered beacon mode triggers from the CIM daisy-chain'without affecting the external, isolated output required for the mode triggers. The MIG shall eliminate the P1 pulse and retain the P3 pulse, the leading edge of which defines beacon zero range. The P3 pulse shall be provided to the GPA-124 as its pretrigger. The HIG shall incorporate a range word generator which yields a range clock with an MSB of 128 nmi, and an LSB of 0.25 nmi or a binary fraction thereof. This generator shall be independent of any similar range word generator elsewhere in the CD-2. The P3 pulse shall be able to preset the generator to any value, in order to provide the correct reporting range for detected AIMS targets. The MIG range word generator shall provide nonstaggered range sync pulses to the GPA-124 at integral multiples of 0.50 nmi. For each sweep, the first range sync pulse shall occur no earlier than 1.0 mile, nor later than 0.25 mile, before AIMS range zero;. the last pulse shall not occur later than 30 us prior to the next AIMS zero range. The range sync pulses shall occur at the beginning of the first or the beginning of the second 1/4-mile segment of each half-mile, as selected by simple internal means.

(c) Operation with a staggered beacon radar - The MIG shall be able to receive a staggered pretrigger directly from the external radar timing equipment which occurs at a nominal 550 us before the P3 pulse. This trigger shall not be passed through the CIH. A delay adjustment

shall be provided within the MIG which is capable of delaying this trigger from zero to at least 100 us in 6.18 us steps. The jitter of the delayed trigger with respect to the received trigger shall not exceed ±100 ns. This trigger shall be provided to the GPA-124 as its pretrigger and shall aiso be used as a range reference for the MIG range word generator. The generator shall function as specified above, except that the range sync pulses provided to the GPA-124 shall be staggered as determined by the delayed pretrigger. An AIMS range alarm shall be'declared if the range clock fails or changes frequency such that an effective error of 0.25 nmi or more would exist at a hypothetical range of 250 nmi. The range clock shall be checked in both the staggered and nonstaggered mode or operation. The MIG shall also monitor the staggered pretrigger in the staggered mode of operation. An AIMS pretrigger alarm shall be declared if the pretrigger fails or is more than 2.0 us from its expected position.

Selection of staggered or nonstaggered operation, as well as the adjustment of the delay for the staggered pretrigger shall be made by simple internal means.

(d) Range conversion - The GPA-124 receives range pulses from the MIG every half-mile; however, it processes data internally in 1/3-mile increments and provides the AIMS target signals to the MIG with the same 1/3-mile timing. The beginning of the first 1/3-mile range cell in each one-mile increment is synchronized with the beginning of the first 1/4-mile range cell in each one-mile increment in the MIG. All of the range-oriented AIMS target signals (target start, target present, friend A, friend B, and loop test target designator) will be reported to the MIG by the GPA-124 at 3.2 ±0.2 us following the beginning of the appropriate 1/3-mile range increment. The MIG shall include all of the synchronization circuitry necessary for correct conversion to the 1/4-mile range cell target detection algorithm used in the MIG.

3.4.3.1.5.1.2 AIMS target detection.- AIMS targets shall be able to be detected anywhere in the CD-2's coverage out to a range of 250.0 nmi or to within 50 us of range zero of the shortest beacon sweep, whichever occurs first. The MIG target detection algorithm used for detection of AIMS targets shall use a fixed 0.25 nmi range cell technique. At least 20 AIMS targets shall be able to be processed simultaneously. Receipt of both a target start pulse and a target present pulse shall initiate an AIMS target file, using the range and azimuth values which exist at the time. The target start pulse will occur only once per target, at its leading edge. The target present signal will start on the same sweep as the target start signal (and at the same range) and will recur on successive sweeps until the GPA-124 no longer senses the presence of the AIMS target. All target present signals which occur on consecutive

sweeps in the same GPA-124 range increment as the target start pulse shall be correlated with the target file initiated in response to that start pulse. The first absence of the target present signal at the target's range on a succeeding sweep shall establish the trailing edge of that AIMS target. The friend level of each target reply will be provided as one of four conditions as determined by the presence or absence of pulses on the friend A and friend B lines. The signals will be provided at the same range as the other target signals; friend B is the most significant bit. The friend level to be reported for a target shall be the highest value received during the target's run length (not including the sweep when the target present pulse was first absent). The target shall be reported with its test bit set if the loop test target designator signal was present at the range of the other target signals during any of the target's run length.

The detection of all nontest targets by the MIG shall be enabled by the Mode 4 enable signal which is provided by the GPA-124 to the MIG as a dc level. Any target file which was started before, or which is still in process at the termination of, the Mode 4 enable signal shall not result in an AIMS target report. The only exceptions to this requirement shall be those targets which have the loop test target designator signal present during their detection. The Mode 4 enable shall also be used to set the AIMS present bits in the USAF search and beacon reports as specified in 3.4.3.1.5.4.1.2.

3.4.3.1.5.1.3 AIMS target report processing.- The AIMS targets'shall be reported with the range established by the timing of the target signals. The reported azimuth shall be the center azimuth determined by the leading and trailing edges as modified by an AIMS azimuth correction value. This value shall be the same for all AIMS targets and shall be able to be set to any value from +5.6 degrees to -5.6 degrees in 0.022 degree increments by simple internal means. The AIMS target report shall be provided in the format specified in Table VI and shall have the USAF user bit set and the FAA user bit reset (i.e., set to zero).

3.4.3.1.5.1.4 AIMS identification request processing.- The contents of the AIMS identification (ID) requests shall be provided to the GPA-124 by the MIG in the format specified in 3.4.2.1.6.1. Any ID request with the correct site address shall be reformatted and provided to the GPA-124 regardless of the parity status of the message. The parity status shall be indicated as specified in Table IV. Transmission to the GPA-124 shall be initiated within 1 ms after receipt of the complete ID request.

3.4.3.1.5.1.5 AIMS test target generator.- The MIG shall be able to generate test targets for maintenance purposes. The two target patterns which shall.be provided are the fixed single and fixed ring aircraft target patterns specified in 3.4.3.1.3.4.2(a) and (b). The selected # pattern shall be available for either internal or external use. In the #

external mode, the targets shall be provided to the GPA-124 as a trigger on its test target pulse line. In the internal mode the test target generator shall produce the correct sequence of target start, target present and loop test target designator signals. In addition, the friend level (0, 1, 2, or 3) of the test targets shall be able to be generated. The inputs from the GPA-124 shall not be inhibited during the generation of internal test targets. The targets shall be generated without regard to the beacon mode interlace. Location, run length, friend level, internal or external mode, and on-off control of the AIMS test target generator shall be exercised from the front panel of the maintenance console.

3.4.3.1.5.2 Military ppi data.- The MIG shall provide the videos, triggers and azimuth data necessary to provide correct operation of the USAF ppi at radar sites with synchronized, nonstaggered beacon and search. videos. Azimuth data shall consist of the synchro data as provided to the CD-2C by the associated search radar, and of ACPs and ARPs from the MIG. The ACP and ARP signals shall be those distributed by the on-line CIM except that there shall be only 4,096 ACPs per ARP. The MPG shall provide three isolated zero range trigger outputs: one for the USAF ppi, one for the height finder radar, and one spare. The triggers shall be derived from the radar pretrigger provided to the CD-2C. The MIG shall provide at least seven separately-adjustable video output circuits for use with the USAF ppi. Three of these shall be used for the mti, log (normal) and beacon videos as received and conditioned by the CIMs and provided by the on-line CIM to the MIG. A fourth video, AIMS ppi video, will be provided directly to the MIG by the GPA-124. The MIG shall provide a fixed-amplitude version of this video to the maintenance console for ppi display in addition to providing the adjustable isolated output for the USAF ppi. The fifth video shall be' an isolated version of the gated target video as provided to the maintenance console (3.4.3.1.4.1). The remaining video output circuits shall be spares and shall be able to be substituted for any of the other five video circuits by simple internal means.

3.4.3.1.5.3 Height finder radar data processing.- The MIG shall be able to operate with one height finder radar of either type listed in Table I. At a-given CD-2C site, the MIG shall be able to operate with any two range-height indicator (RHI) consoles. The RHI consoles shall be able to be two OA-270s, two OA-929/CV-601 combinations, or one console of each type. Included with the MIG shall be a message console for each RHI. The MIG shall also provide the azimuth synchro error data to the height finder to control the azimuth orientation of its antenna. Two modes of height finder operation shall be provided: manual and semi-automatic height finding (SAHF). In the SAHF mode, the height finder radar's antenna orientation shall be controlled by the MIG based on the incoming height request messages, and height reports shall be automatically transmitted in response to the height requests. In the manual mode, the USAF operator manually controls the radar's azimuth and makes the appropriate reports.

3.4.3.1.5.3.1 Height finder request message processing.- The MIG shall receive and process the incoming request data from the Military modem receiver as specified in 3.4.3.1.5.4.2. When it is determined that a height finder (HF) request message which is applicable to this CD-2C site has been received intact, the data in the new message shall replace that of the previous message in a data storage unit. This storage shall contain all of the data used in the processing of input and output messages, including the following data at a minimum: height (8 bits), request number (3 bits), X and Y coordinates (10 bits each), task assignment (4 bits), and azimuth slew (2 bits).

Since the coordinate data in the request message are in Cartesian (X-Y) coordinates and the radar requires it to be in polarcoordinates, the MIG shall convert the X-Y data to range-azimuth data. The range and azimuth information from the previous message shall be held constant until this conversion process is completed to eliminate the possibility of providing incorrect and transient data to the height finder during the conversion process. The converted range and azimuth data shall be stored in the data storage unit. The stored azimuth data value shall be compared to the current azimuth of the radar antenna as provided to the MIG by the l-speed and 36-speed synchro stator voltages. The resulting error signal shall be provided to the radar's antenna drive unit as 1-speed and 36-speed synchro rotor signals, equivalent to those from type 15CT6D control transformers. The coordinate conversion and synchro error signal generation processes shall be implemented electronically; no electro-mechanical assemblies which move during these processes shall be permitted.

X-Y values with a precision of 0.5 nmi which have been converted to polar values using an exact mathematical process shall be used as a standard in assessing the accuracy of the MIG's coordinate conversion process.. These standard values shall not differ from the MIG's converted output of the same X-Y data as stored in the data storage unit interface by more than ±0.5 nmi in range and ±1.0 degree in azimuth for any range from 20 nmi to 200 nmi.

3.4.3.1.5.3.2 Height finder mode control.- The MIG shall provide two modes of height finder operation, as controlled and selected by a mode control unit. The SAHF or manual mode of operation shall be able to be selected from the front panel of the maintenance console. In addition, a remote control feature shall be able to be activated from the front panel of the maintenance console. When this feature is enabled, the UHF-manual mode selection shall be made by a control on the active RHI message shelf. An indicator shall be provided on the active RHI message shelf when the remote control feature is enabled. The selection of another mode from the maintenance console shall override and disable the remote control feature. Control of which RHI console and associated CD-2 message console shall be used to formulate the SAHF height reports shall also be exercised from the front panel of the maintenance console.

In the SAHF mode, the azimuth error output of the coordinate conversion process shall be provided to the height finder radar. Transmission of height reports shall be permitted only in the SAHF mode. Similarly, the RHI display signals and message shelf controls shall be operable on the active RHI group, when the SAHF mode is selected.

In the manual mode, the height operator shall have control of the antenna's azimuth. This shall be effected by providing the synchro rotor signals from the C-1050 azimuth control unit to the height finder radar in lieu of the synchro rotor signals from the MIG's error generator. The C-1050's azimuth signals shall also be provided to the radar when the MIG is in a nonoperational (fault) or power-off condition, regardless of the mode selected at the message shelf or at the maintenance console. This feature shall not restrict the capability to test the ability of the MIG to correctly position the antenna in an off-line test. Any height requests received while the MIG is in the manual height finder mode shall have their request types displayed on the message console if it is operational, but shall not be processed further. No height reports shall be transmitted in the manual mode.

3.4.3.1.5.3.3 RHI message consoles and display signals.- A message console shelf and associated data processing and display signal generation circuitry shall be provided for each RHI as a part of the MIG. The message console shelves shall be located at the RHI consoles in the USAF operations roan and will be operated in a darkened environment. The consoles shall be able to operate effectively with up to 1,000 feet (300 m) of cable connecting them to the MIG. The processing and display signal generation circuits shall be located within the CD-2C's cabinetry; shall record the operation of the associated message console and, if this RHI group is active, make this information available for the preparation of height reports. The display signals specified in 3.4.2.1.6.3.3 shall be generated for each RHI group and shall be available for calibration and maintenance purposes, regardless of the on-line or off-line status of the RHI group. Only the active RHI message console, however, shall be able to control or affect the data in the common data storage area which are used to formulate the final height reports.

3.4.3.1.5.3.3.1 Height display signals.- The MIG shall include a height counter for each RHI group. When operating in the SAHF mode, the counters for the active and the off-line RHI groups shall be initially set to the height value contained in a new, valid height request message after the transmission of the latest height report. The contents of the counters shall be able to be modified by appropriate motion of the range-height trackball on the associated message console, regardless of the on-line or off-line status of the console. The counter shall not be able to roll over from zero to maximum or maximum to zero. The MSB shall be 51,200 feet (15 km) and the LSB shall be 400 feet (122 m). The contents of the counter shall be converted to a dc voltage which will be used to position the height line on the RHI display. This analog height signal shall be a linear function of the contents of the height counter. The conversion shall be such that the dc level varies from zero to at least +30V at a rate k, where k = +0.266 +0.06 volts per 1,000 feet (300 m). The nominal value for a height of 107,000 feet (31 km) is +27.13V dc. The linearity of the digital-to-analog conversion shall be +0.2 percent or better. Separate adjustment of the value of k within-the specified tolerance shall be provided for each RHI group. The adjustments shall be able to be made from the front of the MIG without disassembly or affecting the operation of the other RHI group or the remainder of the CD-2C. Recalibration of this adjustment shall not be necessary in the event of a change in the on-line or off-line status of the RHI group.

A numerical readout of the contents of either of the height counters shall be able to be displayed on the tabular display in the maintenance console for calibration purposes. A heigbt line intensity control for use with the CA-270 RHI shall be provided on each RHI message console.

3.4.3.1.5.3.3.2 Range Display Signals. The MIG shall contain a range control device for each RHI group. When operating in the SAHF mode, the device for the active RHI group shall be initially set to a value equal to 2.0 nmi less than the range provided by the coordinate conversion process. The contents of either range control device shall be able to be modified by appropriate motion of the range-height trackball on the associated message console, regardless of the on-line or off-line status of the console. The control device shall not be able to roll over from zero to maximum or maximum to zero. The range control device shall be able to record range values from zero to at least 200 nmi with a resolution of 0.25 nmi or better. The range value'in the device shall be converted to a dc voltage which will be used to position the range line on the OA-929/CV-601. This analog range signal shall be a linear function of the range value in the control device. The conversion shall be such. that the dc level varies from zero to -56V (or greater) at a rate k, where k = -0.273 ± 0.008 volts per nautical mile. The nominal value for 200 nmi is -54.6V. The linearity of the digital-to-analog conversion shall be + 0.5 percent or better. Separate adjustment of the value of k within the-specified tolerance shall be provided for each RHI group. The adjustments shall be able'to be made from the front of the MIG without disassembly or affecting the operation of the other RHI group or the remainder of the CD-2. Recalibration of this adjustment shall not be necessary in the event of a change in the on-line or offline status of the RHI group. .A numerical readout of the contents of either range control device shall be able to be displayed on the tabular display in the maintenance console for calibration purposes.

In addition to the analog range output, the MIG shall provide a range trigger signal for the OA-929 RHI and range pulses in the composite beam intensity signal for the OA-270 RHI. Using the zero range trigger described in 3.4.3.1.5.2 as a standard, the range triggers and beam intensity range pulses shall occur at the correct time for the range value in the range control device, within a tolerance of ± 0.5 nmi. A range line intensity control for use with the OA-270 RHI shall be provided on each RHI message console.

3.4.3.1.5.3.3.3RHI message console.- Each of the two RHI message shelf consoles provided with the MIG shall be identical and shall contain the minimum number of controls, indicators and components necessary to meet the requirements herein. The consoles may use local, single-phase, 60 Hz Rower as # their prime power source, providing the loads do not exceed 75 watts per console, Such power will be available from standard duplex outlets within 25 cable feet (7.6 m) of the RHI displays. The contractor shall be responsible for providing and, when required by the contract, installing these power cables. The indicators shall have two clearly distinquishable leveis # of brightness; the brighter level shall denote the active state of the indicated function or control. The intensity of the illumination shall be controlled by the operator at the console from fully extinguished to full brilliance. The GA-270 range and height display intensity controls shall be provided on each message shelf. Other controls and indicators shall be provided as required below:

(a) RHI active indicator - This indicator shall be fully illuminated on the message console which is on line.

(b) Mode indicators and control - Separate indicators shall be provided to indicate that the height finder is operating in the SAHF mode or the manual mode. A third indicator shall be fully illuminated on the active message console.when the remote mode selection feature is enabled. The mode control specified in 3.4.3.1.5.3.2 shall be provided.

(c) Request line status indicators and controls - Separate visual indicators shall be provided to alert the operator to receipt of a message with incorrect parity and to the complete failure of the request line's telephone circuit. The visual indicators shall be fully illuminated as long as the error condition is present. An audible alarm indicator in the active message console shall also be initiated upon detection of either error condition. The audible alarm indicator shall be able to be disabled at the CD-2 by a simple internal control within the MIG. The indicator shall not be loud, harsh or excessively annoying to the height operator. It shall have a fundamental frequency between 2.0 and 3.0 kHz and a control to regulate its volume. The volume shall be adjustable from not less than 5 EPNdB to at least 30 EPNdB. Once initiated, the audible alarm indicator shall continue to sound until the audible alarm indicator reset control provided on the console is activated. The audible alarm indicator shall be enabled only when the height finder is operating in the SAHF mode.

(d) Task assignment indicators - Two separate visual indicators shall be provided to indicate the type of height request. The two types of requests are standard height and no action, and are denoted by task assignment values of 8 and 4 respectively in the height request message. The two task indicators shall be labeled HT and NA respectively, and shall be fully illuminated upon receipt of a height request with the applicable task assignment code. An audible height request indicator shall also be provided in the active message console to advise the operator that action on his part is expected., It shall meet all of the auditory requirements of the audible alarm indicator except that it shall have an easily distinguishable fundamental frequency which is between 1.0 and 2.0 kHz. It shall not be able to be reset but shall be able to be regulated in volume. Separate volume controls shall be provided for the two audible indicators unless the sound levels of the two indicators are within 5dB for all settings of a single volume control. The audible height indicator shall sound for at least 0.5s but not more than 1.0s at the following times: once 12 $\pm$ 0.5s after receipt of each valid height (HT) request; and once immediately upon receipt of a valid height request after receipt of one or more no action (NA) requests. The audible height indicator shall be enabled only when the height finder is operating in the SAHF mode.

(e) Azimuth vernier control and indicators - Each message console shall contain an azimuth vernier control and associated vernier limit indicators. When the height finder is operating in the SAHF mode, the vernier control in the active message console shall be able to

modify the value of the converted azimuth data stored in the data storage unit, thereby altering the azimuth of the radar's antenna. The alteration shall be provided in 0.088 degree increments in either direction as determined by the sense of the motion of the vernier control. The vernier shall not be able to alter the stored azimuth angle in either direction by more than that angle which subtends a 5.0 nmi long arc at the range provided by the coordinate conversion process (3.4.3.1.5.3.1). Separate vernier limit indicators shall be provided to indicate when the left limit or right limit of azimuth control is reached. The appropriate indicator shall be reset when the vernier has been moved away from the limiting condition. The vernier action shall be smoothed or damped so that sudden and oscillatory azimuth changes which could damage the height finder azimuth drive equipment are not possible. The vernier function shall'be initialized (returned to zero) upon receipt of a new height request message.

(f) Range-height trackball - Each message console shall contain a trackball which shall control the position of the range and height lines on the RHI consoles's display. The trackball shall provide a linear relationship between its movement and the movement of its associated displays. Rotation of the ball to the operator's right shall correlate positively with increasing range, and rotation of the ball away from the operator shall correlate positively with increasing height. Movement in any composite direction shall cause proportional changes in both range and height.

(g) Message read-in control - Each message console shall include a back-lit, momentary contact read-in control. Operation of the read-in control shall enable the use of the data in the height counter in the preparation of the next height report. In the event that the read-in condition is not present at the time when the next height report is to be prepared for transmission, a height value of zero shall be inserted in the report. The read-in condition shall initiate the full illumination of the readin control and shall inhibit any further changes in the message data, antenna azimuth or RHI display by the trackball or azimuth vernier controls, The read-in condition shall be reset when the height report is transmitted.

(h) Cancel control - Each message console shall contain back-lit, momentary action cancel control which negates the effect of an operator-initiated read-in condition. The automatic read-in condition which is a part of the no action (RTQC) height finder function shall not be able to be cancelled by the cancel control.

3.4.3.1.5.3.4 Height report processing. - The MIG shall prepare and transmit a height report when the height finder is in the SAHF operating mode and an incoming message which is recognizable as a height request for this site is received, regardless of the parity status-of the new request.

No reply shall be generated upon receipt of the height request following the receipt of the flawed message. If the read-in condition is present from either operator action or in response to a no action request, the contents of the height counter shall be used in the height report; otherwise, a height of zero shall be reported. In the event that the report is in response to a standard height request and if the azimuth vernier control has been used, one of the azimuth slew bits in the height report shall be set. The bit corresponding to the direction last moved shall be reported even if the final azimuth position is identical to the initial azimuth value.

The MIG shall process the no-action height requests as follows to permit remote checking of the request-reply processing path as a part of the real-time quality control (RTQC) function of the USAF center:

(a) Upon receipt of a no action request (task assignment 4) with an odd request number (LSB = 1), the following action shall take place:

(1) The LSB of the height counter shall be forced to a one, and the other bits shall be set to the value of the height data contained in the request message.

(2) Both the left slew and the right slew bits shall be set.

(3) A read-in condition shall be forced.

(b) Upon receipt of a no action request with an even request number (LSB = 0), the LSB of the height counter shall be forced to a zero, the other bits of the counter shall be set to the value of the height in the request message, and the read-in condition shall be forced.

The unique actions specified in (a) and (b) above shall not take place if a jammed read-in control is detected by the MIG. The control shall be considered jammed if the read-in condition is not, or cannot be, reset as specified in 3.4.3.1.5.3.3.3(g). When the jammed read-in condition is present, the response to a no action request shall be the same as for a standard height request.

3.4.3.1.5.4 Military data processing. - The MIG shall provide the interface with the Military data modem equipment, shall provide filtering of the CD--Z output data and shall generate the unique USAF reports and status messages. Two ppi videos, and all messages provided to the Military data channels shall be provided to the maintenance console for display and analysis.

3.4.3.1.5.4.1 Military output message processing. - The MIG shall obtain, prepare and control the data provided to the two Military output data channels as specified herein.

3.4.3.1.5.4.1.1 Source and types of CD-2 output data. The CD-2 shall provide the following target and status data from its on-line channel to the MIG for filtering, modification and transmission to the USAF centers:

(a) Beacon target reports

(b) Search target reports

(c) Search RTQC reports

(d) Strobe reports (search and beacon)

(e) Status messages

These reports shall be provided to the MIG in final form after all correlation and correction processes have been completed. The specific source of the data within the online CD-2 channel shall be the system data bus. The flow of data to the MIG shall not be dependent upon the status or capacity of the FAA data circuits, nor shall the status or capacity of the MIG or the military data channels limit in any way the buffer storage capacity, data transmission capacity or error-free operation of the other modules within the CD-2C.

3.4.3.1.5.4.1.2 Output message preparation and filtering. - The MIG shall prepare eight types of messages for transmission over the military data channels: beacon, search, search RTQC, strobe, status, AIMS, height and USAF map. All messages provided to the military data channels shall have their Air Force user bits set; additionally, those formatted from data received via the online CD-2 channel shall have their FAA user bits set. All messages provided to the output data sets shall be in the common formats specified in Tables II and VI. The MIG shall provide the same message reformatting capability as the CIM (3.4.3.1.3.3.1). To facilitate maintenance of the simplex MIG, it shall be able to be placed in either an operational or a maintenance status from the front panel of the maintenance console. When in the maintenance condition, a conspicuous notation advising maintenance personnel of its off-line status shall be displayed on the front panel of the maintenance console and the test bit shall be set in each message transmitted to the data sets. The test bit shall have its normal function when the MIG is in an operational condition. The Military output messages shall be prepared as follows:

(a) Beacon target reports - The beacon reports provided by the MIG data channels shall be the same as those transmitted by the CIM data channels with a single exception. The AIMS present bit (bit 40) shall be set in every beacon message, except the beacon RTQC test target message, if the beacon target's center azimuth falls within the sector defined by the Mode 4 enable gate.

(b) Search target reports - The search reports provided by the MIG data channels shall be the same as those transmitted by the CIM with two exceptions,:

(1) The search target report shall be inhibited if its location is within any of at least three independently established range and azimuth sectors. Each search map sector shall be able to start at any azimuth which is an integer multiple of 2.8 degrees,

and its azimuth width shall be adjustable from 2.8 degrees to 360 degrees in 2.8 degree increments. The start range of each sector shall be able to be set to any integer multiple of 2.0 nmi, from zero to 250 nmi. The range extent of each sector shall be adjustable from 2.0 to 250 nmi in increments of 2.0 nmi. The location and enable-disable status of each military map sector shall be independently controlled from the front panel of the maintenance console.

(2) The AIMS present bit (bit 40) shall be set in every search message, except the search RTQC message, if the search target's center azimuth falls within the sector defined by the Mode 4 enable gate.

(c) Search RTQC, strobe and status messages - The strobe, status and search RTQC messages provided by the MIG shall be the same as those transmitted by the CIM.

(d) AIMS target reports - The MIG shall prepare and transmit AIMS target reports as specified in 3.4.3.1.5.1.

(e) Height reports - The MIG shall prepare and transmit height reports as specified in 3.4.3.1.5.3.4 and Table VI.

(f) USAF map messages - The MIG shall prepare and transmit USAF map outline messages which define the boundaries of the Military search map sectors specified in (b) above. Transmission of the map messages. shall be enabled or disabled from the front panel of the maintenance console. When so enabled, and providing that one or more map sector is also enabled, the map report messages shall be generated every fourth scan and shall report the start and stop ranges of all enabled sectors. A message shall be generated for any azimuth in an integer multiple of 2.8 degrees and which is a boundary of or contained within the enabled map sector. In the event that more than one sector defines more than one separate and distinct mapped area at a single reportable azimuth, multiple map messages shall be generated to separately report the sectors.

3.4.3.1.5.4.1.3 Output buffering and modem control. - The MIG shall regulate the processing of Military messages so as to provide a free flow of each type of data through the MIG to the Military data sets regardless of the proportion of one type of data to another. Because the USAF requires two output data transmission circuits, it is likely that the MIG's data output capacity can, at times, be less than the rate at.which data are available from the online CD-2 channel. Accordingly, the MIG shall contain an output buffer for temporary storage of final reports and messages in the common output format until one of the output channels is ready to accept another message. The MIG output buffer shall use a modified

first-in, first-out control algorithm such that all messages with a high priority are transferred from the buffer before any with a lower priority. Messages with the high priority shall be validated beacon emergency (codes. 7600 or 7700) reports, strobe reports, search RTQC reports, AIMS reports and height reports. All other messages shall have the lower priority. The output buffer memory shall include the appropriate control bits to enable the modem controller to implement this priority technique, separate buffer overload and buffer overflow signals shall indicate when the buffer reaches approximately 75 percent and 98 percent of capacity respectively. USAF map messages shall be prohibited from entering the queue when the overload condition is present, and all except height and status messages shall be inhibited during the overflow condition. The buffer shall be able to hold at least 250 common format messages in any -proportion.

The buffer control algorithm shall keep track of the length of time each message is in the queue, using increments of 125 ms or less. As each message is readied for transfer from the buffer, the time spent in the queue shall be calculated. If this time-in-storage is less than or equal to 6.0s, the message shall be transferred to the data set with the storage time appended asprovided for in the common message format. If the time-in-storage is greater than 6.0s, the message shall not be transmitted # to the data sets but shall be declared to be "old data". The number of such messages per scan shall be transmitted to the maintenance console for display on the tabular display. These messages shall not be retained in the output # buffer. A half-scan inhibit alarm shall be reported in the USAF status message whenever an old data declaration is made.
The MIG shall regulate the access of each of the two USAF modem output channels to the output buffer memory. Access shall be implemented such that the data transmission rate of any output channel is not restricted by the MIG or the on-line CD-2 channel. It shall be possible to enable or disable either one or both of the USAF output channels from the front panel of the maintenance-console. The transfer of messages of the military modems, insertion of parity bits, idle character generation, bit output transfer requirements and output service and modem alarm detection functions in the MIG shall be the same as those specified for the CIM in 3.4.3.1.3.3.3, The MIG output service and modem alarms shall be separately reported from that of the CIM.

3.4.3.1.5.4.1.4 Display of MIG data. - The MIG shall provide data to the maintenance console for viewing on the plan position display for maintenance and diagnostic purposes. The AIMS ppi display video shall consist of the logical sum (OR) of the target start, target present, friend A, friend B and loop test target designator signals provided to the MIG by the GPA-124. The USAF map outline video shall consist of pulses which define the start and stop ranges of each USAF search map sector, regardless of whether the individual map functions have been enabled or disabled or the map report messages are transmitted or not. Two types of data shall be available for rappi display: the actual # messages provided to the Military data sets and the number of "old data" # which have been inhibited from transmission to the data sets. Selection of either type of data shall be accomplished from the front panel of the maintenance console.

3.4.3.1.5.4.2 Military input message processing. - The MIG shall interface with the USAF modem receiver to receive, validate and distribute height and identification requests to the height and AIMS processing functions within the MIG. These request messages, denoted HF and ID request messages respectively, will be transmitted by the air defense center; each message will be preceded by one or more idle characters. The 13-bit idle character will be the same as that of the common format data output (0001111111111), and will be transmitted continuously when HF or ID request messages are not available for transmission. The MIG shall establish frame synchronization of the request data channel using this idle character. Either the loss of synchronization or the receipt of a line failure signal from the modem receiver shall be sufficient to declare a request line failure alarm.

The MIG shall include capability to designate itself with any one of 32 possible site addresses, zero through 31. The site address shall be established by simple internal means. The MIG shall examine each incoming message for a matching site address. If the address of the request message does not match the adapted site address, the MIG shall ignore the message. Messages with the correct site address shall have their parity checked. Parity checking shall be accomplished on a per word basis where a word corresponds to a row in Table VII. A parity error shall be declared if the parity for one or more words fails to check. A parity error shall be indicated on the active height message console (3.4.3.1.5.3.3.3) until a new message is received intact, regardless of whether the flawed message is a HF or an ID request. Correctly-addressed messages which are received intact shall be inspected to determine if they are height or ID requests as indicated by the ID bit in Table VII. Valid height requests shall be processed as specified in 3.4.3.1.5.3.1 and the ID requests shall be processed as specified in 3.4.3.1.5.1.4.

3.4.3.1.5.5 MIG self-test. - The MIG shall routinely test itself, check the test data against established norms and report the results of the check. Two types of testing shall be incorporated into the self-test function: operational and diagnostic.

3.4.3.1.5.5.1 Operational self-test. - The operational MIG self-test shall operate continuously when the MIG is in an operational, online condition. As a part of the self-test, at least five dummy targets per scan shall be injected into the MIG via the system data bus. After they have been successfully filtered and reformatted, the pseudo targets shall be entered into the output buffer. The self-test targets shall be identified with a special tag which permits the targets to be accessed by the output data channel circuitry and transferred to a separate register for analysis in lieu of being transmitted to the users. The self-test targets shall be cycled through the output buffer such that all memory locations are checked at least once every 15 minutes. The self-test targets shall have sufficient variety and frequency so as to check the

reformatting functions specified in 3.4.3.1.5.4.1.2 at a minimum. The self-test targets generated for and successfully passed by the BTE, STE and CIM shall be utilized for the MIG self-test if they meet these requirements.

The MIG's operational self-teat shall 'function as a status monitor for the following alarms and functions:

(a) AIMS azimuth alarm

(b) AIMS range alarm

(c) AIMS pretrigger alarm

(d) GPA-124 alarm

(e) Height finder mode

(f) Active RHI group

(g) Request line parity alarm

(h) Request line failure alarm

(i) MIG operate-maintenance condition

(j) USAF mapping on-off

(k) Buffer overload alarm

(l) Buffer overflow alarm

(m) Half-scan inhibit alarm

(n) Military output service alarm

(o) Military modem alarm

The operational self-test shall also detect any data lost as the result of the failure of any register, buffer or complete memory system within the MIG. Normal adjustments of the test target generators in the CIM or in the MIG, nor the alteration of any other operational controls, shall not impair the effectiveness or accuracy of this function. A complete MPG operational self-test cycle, less the output buffer portion, shall be completed at least once every four antenna scans. The MIG status # shall be provided to the system monitor in the on-line CD-2 channel and shall # be updated within 0.5s of the detection of any change in status.

3.4.3.1.5.5.2 Diagnostic self-test. - The MIG's diagnostic self-test functions shall be able to be initiated only when it is off line in a maintenance condition. Two types of diagnostic self-test shall be provided;

both shall be controlled and initiated from the front panel of the maintenance console. The first type shall simulate the digital messages received from the Military modem receiver. Individual control of each bit in the 91-bit message shall be provided to permit testing of the MIG as well as the height finder and GPA-124 equipment. The messages shall be able to be entered on a single message (one shot) basis or continuously with a single idle character between consecutive messages.

The second type of diagnostic self-test shall check the internal MIG components and shall present its results to the system monitors in both CD-2 channels within four minutes after the test was initiated. This self-test shall include, at a minimum, the checks specified in 3.4.3.1.3.5.2 (a), (b) and (c) for the CIM.

3.4.3.1.6 CD-2 operation and control. - The operational control of the complete CD-2 shall be able to be exercised from the front panel of the maintenance console. The following is a summary of the major operational and maintenance functions which, as required elsewhere in this specification, are to be so controlled. This list is not inclusive and indicates the type of function and its control which requires this type of control. Unlisted functions which are similar to those below shall be proposed to the Government as being controlled in this manner during the course of the design of the CD-2. The Government shall make the final decision on the control of such functions.

(a) On-line and off-line control of the CD-2 channels and modules to obtain the specified operating modes.

(b) Beacon run length reporting, on-off

(c) Beacon run length discrimination

(d) Beacon strobe elimination, on-off

(e) Beacon offset, on-off

(f) BTE diagnostic self-test

(g) Search target videos (1 and 2) fixed clip level, on-off

(h) Search target video crossover

(i) Search run length discrimination

(j) Search strobe elimination, on-off

(k) Weather video stc compensation

(l) Weather video mti and CP compensation

(m) Weather video crossover

(n) Weather thresholds (1 through 8)

(o) Weather calibration

(p) Weather reporting

(q) Weather contouring range

(r) STE diagnostic self-test

(s) Azimuth data source, APG - ADC

(t) FAA data channels (1, 2 and 3), on-off

(u) Beacon RTQC code, one-zero

(v) CIM test target generator, maintenance test targets

(w) CIM self-test

(x) MC displays

(y) MC self-test

(z) MIG test target generator, maintenance test targets

(aa) Height finder mode, SAHF, manual, remote

(ab) Height finder RHI console selection, group l-group 2

(ac) Military mapping

(ad) Military map report, on-off

(ae) Military data channels (1 and 2), on-off

(af) MIG input message simulator

(ag) MIG automatic diagnostic self-test

Except as provided in the applicable paragraph describing these functions, the adjustment or alteration of these functions shall not cause false operational data (nontest message labels) to be transmitted from an on-line module to a data transmission circuit. This requirement applies to power application and channel change operations in particular. Channel changes, when both channels are operational, shall be accomplished with no change in the integrity of the output data provided to any data modem.

3.4.3.1.7 Status monitor. - Each CD-Z channel shall contain a status monitor. Although it is specified in this paragraph, the monitor shall functionally be considered to be a part of the control and interface module (CIM) of each CD-Z channel. The status monitor shall observe the conditions of specified CD-2 functions, the results of the CD-2 operational and diagnostic self-tests and the reported condition of external equipment. The monitor shall report conditions to remote users via the CD-2 status message and to local personnel via a status and alarm panel, and the displays contained in the maintenance console. When an error is detected in the on-line channel, the status monitor shall, within 1.0 second, effect a change to the standby channel if that channel is operational, and if the automatic channel change feature is enabled. It shall be possible to inhibit and override the automatic channel change feature from the front panel of the maintenance console and also by means of external equipment which is connected to the CD-2 external data interface (3.4.2.1.5).

3.4.3.1.7.1 Monitored functions. - The status monitor, in addition to receiving the status of the functions monitored by .the MIG's operational self-test, shall monitor the functions within the BTE, STE and CIM which are identified in 3.4.3.1.6 (a), (b), (d), (e), (i), (j) and (t). The enable-disable condition of the weather contouring and reporting function shall also be monitored, as shall the results of the operational and diagnostic self-tests and the alarm conditions reported by the BTE, STE, CIM, MC and MIG. The status of the search and beacon radar equipment, as specified in 3.4.2.1.2.5 and 3.4.2.1.3.5 respectively, shall also be observed by the status monitor.

The status monitor, or, at the contractor's option, the respective target extractor module, shall monitor all of the data in the final beacon and search RTQC test target reports for the correct values. If the BTE and STE perform this RTQC verification function, the good-bad results of that verification test shall be reported to the system monitor within 1/36 of a scan.

3.4.3.1.7.2 Status reporting and display. - The data obtained by the status monitor shall be disseminated to the maintenance personnel by three methods. The CD-2 etatus message shall be formulated by the status monitor to report

the status of the radar sensor site to the remote FAA and USAF using facilities. A status and alarm panel shall be provided to display, at a glance, the overall condition of the CD-2 and its individual modules and interfaces. Detailed status data shall be able to be displayed on the tabular display in the maintenance console.

3.4.3.1.7.2.1 CD-2 Status message. - Using the data from its tests and which have been provided to it, the status monitor shall generate a status message in the common format specified in Table II. The status message shall be generated and provided by each status monitor to the output buffer in its respective CIM and to the output buffer in the MIG (online # status monitor only) once each scan within 10 degrees-of-the ARP. In order to safeguard against an oscillatory condition which might generate a multiple of status messages and cause a potential overload of the'output channels and buffars, a change in any bit of the status message shall be reported within 0.5 second of its occurence. Any further change shall be reported in the next status message generated whenever required by the change of another reported parameter or by an ARP crossing. The # specified meaning of each status bit in the message shall be as specified in Table VIII.

3.4.3.1.7.2.2 Status and alarm panel. - A status and alarm panel shall be provided which indicates, in a clearly visible fashion. the status of the entire CD-2. A single, centrally-located, front-mounted panel shall be provided, although, at the contractor's option, additional supplementary status panels may be provided on each module. In the event that the supplementary panels are provided, their use shall be limited to maintenance purposes only. The following information, at a minimum, shall be displayed on separate indicators:

(a) On-line channel

(b) BTE or STE off-line in the on-line channel

(c) MIG offline

(d) Beacon run length reporting enabled

(e) Beacon offset enabled

(f) Single test target's test bit reset

(g) No beacon video suppression during on-line beacon alarm

(h) Rappi refresh overflow*

(i) More digital videos selected for ppi display than there are analog-to-digital converters*

(j) Selected radar channel

(k) Selected beacon channel

(1) Circular polarization

(m) Separate display of each of the other alarms reported in the CD-2 status message, including separate "azimuth" and "synchro" alarm indicators*

(n) Separate display of each of the alarms reported by the MIG's operational self-test*

(o) Temperature alarms (3.5.2.5)

The status panel shall include an audible alarm indicator which sounds at the occurrence of any alarm condition, including those identified in (h), (i), (m) and (n) above. The volume of the audible indicator shall be able to be adjusted to at least four different settings by simple internal means. The lowest audible setting shall be less than '10 EPN dB and the highest shall be at least 40 EPN dB. The audible alarm shall also be able to be inhibited. The audible and visible alarm indicators, once initiated, shall continue as long as the alarm condition is present or until the alarm conditions are reset (or the audible alarm inhibited). A single alarm reset control shall be provided near the alarm and status panel. A remote version of this audible alarm shall be provided as specified in 3.4.2.1.5.1.

*Note: At the contractor's option, these separate indications or portions thereof may be provided on the tabular display instead of the status and alarm panel. In this event, however, both of the following conditions must be met:

1) The information presented shall be readily understandable, either directly or with a very few simple aids, and

2) each indication except (h) and (i) shall be summarized on the status and alarm panel such that the CD-2's status-at-a-glance capability is not derogated.

3.4.3.1.7.2.3 Status on the tabular display. - It shall be possible to obtain detailed status data not available from the CD-2 status message or summarized on the status and alarm panel. As a minimum, the various alarm and status conditions which are logically "ORed" together and reported via a single bit or indicator shall be able to be separately displayed on the tabular display in the maintenance console. In addition, the status of all operational controls shall be able to be displayed on the tabular display if these functions are not controlled by individual switches or indicators which can be visually observed from the front of the CD-2 to ascertain their conditions. The operational controls to which this requirement applies include strobe elimination (on-off), reportable weather thresholds, the values of all weather thresholds, beacon RTQC code (ones - zeros), search video fixed clip level (on-off) azimuth data source, data channels enabled and all other similar controls.

The adjusted conditions or values of at least those internally established parameters which are read and used as data or instructions by one or more microprocessor in its operational program shall be able to be displayed on the tabular display to permit verification of the condition or value. This function shall be implemented as a part of either the module's operational or diagnostic self-test routines. Strobe elimination threshold value, target detector values, position correction values; expected search video pulse width and other similar internal selections shall be available for display and verification.

3.4.3.1.7.3 System performance diagnosis. - It shall be possible to use the maintenance console's rappi and tabular displays to assess the overall performance of either channel of the CD-2. The ability to calculate and display the following data, at a minimum, shall be provided with the system monitor:

(a) Beacon garble count

(b) Beacon bracket count

(c) Search target video hits applied to target detector

(d) Status messages

(e) Any two independently selected and counted target or message types

(f) Ratio of any selected target or message type to any other selected target or message type

The calculations for (a),(b) and (c) above shall yield the average count per sweep for S sweeps starting at D degrees where S is any integer from one to at least 8195 and D is any integer for zero to 359; also available shall be the average count per scan for 1, 2, 3 . . . . 10 scans. The counts for (d), (e) and (f) shall be available for one or more selected quadrants of the CD-2's coverage; their average over 1, 2, 3 . . . . 10 scans shall also be sble to be displayed. The selection of the data type for (e) and (f) shall be made from the types of rappi symbol displays which are specified in 3.4.3.1.4.1.2.1. Any source of the rappi data shall be able to be analyzed in this manner. It shall also be possible, to count and display on the tabular display the number of current targets (less than one scan old) within the rappi refresh sector. The reported runlength, when enabled for the current scan's (i.e., not'refreshed) search, beacon or strobe targets as selected from the front panel of the maintenance console shall be able to be averaged and displayed on the tabular display.

The beacon bomarc symbol (3.4.3.1.4.1.2.1) shall be able to be used to display specific targets for the purpose of visual analysis. As controlled from the front of the maintenance console, the following target conditions shall be able to be selected, one at a time, for display with this symbol in lieu of the normal target symbols:

(a) Search targets with the mti flag set

(b) Beacon targets with the identification bit set

(c) Beacon targets with the special target bit set

(d) Beacon targets with a specific Mode 3/A code, Mode 2 code or Mode C altitude as may be selected from the front panel

(e) Beacon targets with the discrete bit set

(f) Beacon targets with the mti flag set

The initiation, control and results of these system performance analyses shall be available on the system data bus and the external data connector.

3.4.3.2 Provisions to accommodate MTD. - The CD-2 shall include provisions to allow it to function with the planned Moving Target Detector (MTD) modifications to both the long range and terminal search radars as specified in the following subparagraphs.

3.4.3.2.1 MTD description. - As a part of the MTD radar modification, the receiver processor portion of the MTD will be integrated with the CD-2 after the CD-2 has operated in its initial 'configuration for a period of time. A generalized block diagram of the MTD's receiver processor is shown in Figure 7a. The MTD processes radar data in bursts of several sweeps with the sane prf. Each burst, denoted a coherent processing interval (CPI), is processed to yield preliminary pulse-doppler reports of patential targets. The CPI data is then subjected

to scan-to-scan correlation, thresholding, weather contouring and other processing in the post processor. The resulting final target reports and weather messages are made available for searchbeacon correlation and transmission to the using facilities.

3.4.3.2.2 CD-2 functions with MTD. - The CD-2 shall be able to be reconfigured in the field to function with the MTD as shown in Figure 7b. The CD-2 MTD reconfiguration shall be accomplished by two FAA CD-2 technicians in 80 hours or less. The in-phase and quadrature-phase (I and Q) search videos will be supplied to the CD-2 in lieu of the mti and log (normal) search videos. They shall be received and conditioned in the CIM and converted to digital data by the CD-2's analog-to-digital (A/D) converters. The STE will be modified to route the output of the converters to a new MTD processing module which has been provided and installed in each CD-2 channel in a location specifically designed and reserved for that purpose (3.5.2.1.4). The MTD module will control' the sampling rate of the A/D converters. The online MTD processor will provide independent pretriggers to the search and beacon radar equipment for prf control. The preliminary CPI target output from the MTD module will be provided via the existing system data bus to the existing STE module. The STE will be able to be reprogrammed to do the centroiding of CPT data into a single target report, scan-to-scan correlation to eliminate false targets, weather measurement and reporting, and other functions as may be specified in the MTD specification. The search-beacon correlation, the operation of the MIG and the maintenance console, and the system monitor, test target generator and data transmission functions of the CIM shall be unaffected by the MTD modification.

3.4.3.2.2.1 MTD requirements of the CIM. The status of the MTD module will be reported to the system monitor via the system data bus, and shall be able to be displayed on the tabular display.

3.4.3.2.2.2 MTD requirements of the STE. - The STE shall be able to be rewired such that the outputs from the A/D converters are provided directly to the MTD processing module instead of the "as delivered" connection to the STE processor. The STE processor shall be able to be reprogrammed to accept input data from the system data bus or, as an alternate, directly from the MTD module. The STE processor will be reprogrammed to perform the processing required for the MTD post-processor function. The processing capacity and the programmability of the STE processor shall not be altered by the MTD requirements in this paragraph. The required programmability is specified in 3.4.3.1.2.2 and 3.12.3 and related subparagraphs herein.

3.4.3.2.2.3 MTD requirements of the maintenance console. - The MC shall be able to display, using the target dot symbol, the CPI output data for aircraft and weather targets. This shall be accomplished by receipt of the CPI data from the MTD module in a pseudo search target report format. In the event that the MTD module does not provide this data format, or it is not provided via the system data bus, no display of

CPI data shall be required. The gated target, target crossover, weather mti, weather log, gated weather, weather crossover and search run length discrimination video displays will not be required for ppi display with MTD. However, certain equipment or additional ppi data may be made available by the MTD module for display as external videos.

3.4.3.3 Provisions to accommodate AMPS. - The CD-2 shall include provisions to allow it to function with the planned ATCRBS Monopulse Processing Subsystem (AMPS) modification to the beacon radar as-specified in the following subparagraphs.

3.4.3.3.1 AMPS Description. - As a part of the AMPS modification, the multi-channel receiver and the reply processor will be integrated with the CD-2's BTE processors after the CD-2 has operated in its initial configuration for a period of time. A generalized block diagram of a contemplated AMPS receiver is shown in Figure 8a. In addition to its normal (boresight) azimuth data, the monopulse antenna provides amplitude and monopulse information for each received pulse. The monopulse information indicates the off-boresight angle from which each pulse was received. The video digitizer detects the pulses and synchronizes them with the reply processor's clock. The reply processor detects a reply train by comparing the timing, amplitude and monopulse information of the pulses. Target reply words containing the mode, range, boresight azimuth, monopulse average, code, and code confidence information are provided by the reply processor to the reply correlator for each detected beacon reply train. The correlator associates the individual replies into targets by comparing their range, azimuth, monopulse value, code and code confidence information. The monopulse data is used with the antenna boresight value to determine an accurate center azimuth for the final target report. The resulting beacon target reports are made available for search-beacon correlation and transmission to the using facilities.

Because of the additional information obtained by the monopulse process, the prf for the AMPS beacon radar will be approximately one-fourth that of the current beacon radar, or about two interrogations per mode per target.

3.4.3.3.2 CD-Z functions with AMPS. - The CD-2 shall be able to be reconfigured in the field to function with the AMPS as shown in Figure 8b. The CD-2 AMPS reconfiguration shall be able to be accomplished by two FAA CD-2 technicians in 80 hours or less. The BRC in each BTE shall be able to be removed. The digital output of the AMPS reply processor will be provided directly to a new AMPS module to be installed in the CD-2 (3.5.2.1.4). The output of this unit shall be able to be provided directly to the digital input of the BTE processor in place of the BRC The BTE processor will then be reprogrammed to perform functions, such as scan-to-scan correlation to eliminate false targets, as may be specified in the AMPS specification. The processing capacity and programmability of the BTE processor shall not be altered by the AMPS requirements in this paragraph. The required programmability is specified in 3.4.3.1.1.2 and 3.12.3 and related subparagraphs herein. The search-beacon correlation, the operation of the MIG and maintenance console, and the status monitor, search test target generator and data transmission functions of the CIM shall be unaffected

by the AMPS modification. (The new AMPS module will include a beacon test target generator.) The status of the AMPS module shall be reported by the BTE processor to the status monitor in the sane format as for the status of the BRC. The AMPS module will provide garble and bracket indications to the MC for display and analysis in the same manner as the BRC did.

3.4.3.4 CD-Z relationship to DABS. - The Discrete Address Beacon System (DABS) will likely build on the foundations established by the CD-2, MTD and AMPS programs. It is closely allied with the AMPS program as is evident in Figure 9a. When the DABS capability is to be added to an existing CD-2 site, the unique DABS interrogating, receiving and processing functions will be added to the AMPS and CD-2 equipment as shown in Figure 9b. The CD-2, via its external data interface (3.4.2.1.5), shall provide correlated AMPS-search and search-only target reports, weather messages and search, AMPS and CD-2 status to the DABS equipment. The DABS equipment will utilize this data and transmit it as necessary to their using facilities via separate data channels used for DABS traffic. The CD-2 shall continue to provide its data to FAA and USAF users via the CIM and MIG data channels.

3.5 General design requirements. - The CD-2 shall be designed and constructed to comply with the electrical and mechanical design requirements specified in the following paragraphs. All modules and assemblies of a given type shall be identical and interchangeable.

3.5.1 Electrical design requirements. - The electrical design of the CD-2, including ac supplies, electronic design, system grounding and electromagnetic interference shall be in accordance with the following requirements. The design shall minimize electrical power consumption as much as possible.

3.5.1.1 Input ac line controls. Except as otherwise pennited in 3.4.1.5, each CD-2 module (3.1.1) shall have its own power supplies and associated controls for the input ac power lines. In addition, a master power control for each CD-2 channel and an overall CD-2 main power control shall be provided. All controls shall meet the requirements of FAA-G-2100/1 paragraphs 1-3.6.1, l-3.6.2, l-3.6.3 and l-3.6.5. The power on-off controls for each module shall be circuit breakers meeting the requirements of l-3.7.2 of FAA-G-210011; fuses shall not be allowed as protective devices for any module. A tripped or manually turned-off breaker on'any module shall initiate a conspicuous display of that condition. It shall not be possible for a module to be without power, without an indication of that condition appearing on the status and alarm panel and initiating the audible alarm, if it is enabled. The load between the phases shall be balanced to within 10 percent when the total CD-2 system consisting of both channels, the maintenance console and, for the CD-2C, the MIG (less its message' consoles) are all powered-on.

3.5.1.2 Power supplies. - Each module shall contain all of the power supplies necessary to operate its internal circuitry and meet the requirements established elsewhere herein. All power supplies shall be self-protecting such that a continuous short circuit on the output will not damage any wiring or components and that the output voltage will return to normal promptly upon removal of the short. This protection shall be accomplished without the use of fuses, circuit breakers or relays and shall provide a positive indication on the status and alarm panel during such an overload condition. The CD-2 shall be designed to minimize the number of types of power supplies required in the CD-2 and supporting equipment. In the event of a partial failure of a power supply, the affected and unaffected units shall automatically remove any remaining companion voltages from components which could be damaged by the loss or reduction of a portion of their normal operating voltages. Partial and full failures shall be reported as required above. Each module's power supplies shall be independently controlled and protected in accordance with paragraph l-3.7 of FAA-G-2100/1. The electrical efficiency of each power supply unit, defined as output power divided by input Power, shall be 70 percent or greater under normal operating conditions. All power supplies shall meet or exceed the isolation requirements of FAA-G-2100/1, paragraph
1-3.6.7. Transformers contained within units especially designed for use in 'the CD-2 shall comply with the requirements of paragraph l-3.16.14 and its subparagraphs of FAA-G-2100/1, except that the certification and testing requirements of 1-3.16.14.1.1 do not apply.

3.5.1.2.1 Regulation.- All power supplies shall be electronically regulated using independent and separate sol-id-state voltage reference devices for each regulated output voltage. The regulation of one voltage shall not require another output voltage for a bias or a reference, even if multiple output voltages are provided from a single power supply unit. The regulation of each output voltage shall be sufficient to provide the specified
equipment performance in any allowable service condition. Each supply voltage for a digital Logic load (+5 Vdc) shall not vary more than ±0.5 percent as measured with its load varying from 30 percent Less than, to 50 percent greater than the normal Load, and the supply line voltage vary-
ing between the service limits. Voltages for other load types shall be regulated such that under these same line voltage conditions they remain within tolerances set in accordance with good engineering practice.

3.5.1.2.2 Ripple. - Ripple voltage is defined as the peak-to-peak value of any simple or complex waveform present in the output of a regulated dc power supply; power line frequency components and harmonics as well as switching transients, clock hash and other similar signals are included. Sufficient filtering and decoupling of all power supplies shall be provided such that the normal ripple voltage may double (as the result of power transients, component failures, card removal, module removal or similar failures or maintenance actions) without any circuit' or function being disabled or affected by such an increase in ripple.

3.5.1.2.3 Interlocks. - Each modules shall be provided with one or more interlock which removes all voltages of 150V or higher upon the opening of the module for maintenance or adjustment of internal controls. The interlocks shall have a manual bypass which can be activated to prevent interruption of these voltages when the module is opened. The interlocks shall meet the requirements of paragraphs l-3.5.2, 1-3.5.2.1, 1-3.5.2.2, l-3.5.3, L-3.5.3.1 and l-3.5.3.2 of FAA-G-2100/1. These sane voltages shall be provided with discharging devices in accordance with FAA-G-2100/1, paragraph 1-3.5.5.

3.5.1.3 Cabinet supply wiring. - Each CD-2 channel cabinet shall be wired to provide supply line power to all module locations, including locations not populated in certain CD-2 configurations and those locations provided' for the addition of future modules.

3.5.1.4 Batteries. - In the event that batteries are provided to meet the requirements for operation in the presence of electrical transients (3.3.2.2.1), they shall be located in a single battery compartment for the entire CD-2. This compartment and the selection of the battery type shall be in accordance with FAA-G-2100/1, paragraph 1-3.16.1, except that magnesium dry batteries are not permitted. Individual batteries shall be completely sealed and shall not vent gases, liquids or chemicals except in the event of physical damage by external mechanical means. The battery supply shall not be sensitive to orientation of the equipment during operation, transportation or storage.

3.5.1.5 Relays.- The use of electromechanical relays in the CD-2 and its supporting equipment shall be limited to those required for control of the azimuth data converter (ADC) test function and for -controlling the height finder azimuth mode. Solid-state relays are permitted if they meet all other requirements herein.

3.5.1.6 Electron tubes. - In the event that a cathode ray tube is selected as the display device for the plan position display in the maintenance console, it shall be selected, mounted, connected and protected in accordance with the requirements of paragraphs l-3.5.4, l-3.5.6, l-3.5.8 and 1-3.5.8.1 of FAA-G-2100/1, and all paragraphs of FAA-G-2100/2 which are applicable to the selected tube and its application. No additional electron tubes shall be utilized without specific approval from the Contracting Officer.

3.5.1.7 Electronic design. - The CD-2 shall be designed to meet the performance, service life, maintainability and reliability requirements established herein using the least-complex design and most common components possible which permit these requirements to be met. Solid-state devices shall be used to the maximum extent feasible. The number of different types of integrated circuits, transistors and other semiconductor devices shall be kept to an absolute winimum, consistent with meeting the other requirements herein and with good engineering, design. The electronic design shall be such that, whenever possible, a catastrophic failure of a single active device or electrical connection can not be misinterpreted as a normal or valid condition. Accordingly, memories and similar functional elements shall be organized such that the catastrophic failure of an integrated circuit chip shall be able to be detected by the appropriate self-test routine. Parity encoding, one-bit-wide memory chips, error-detecting or error-correcting codes or similar design techniques shall be used as appropriate for memory data, bus data and other similar parallel and serial data transfers to satisfy this requirement.

Integrated circuits, transistors and other semiconductor devices shall be selected and protected in accordance with FAA-G-2100/3 and FAA-G-2100/5 except that plastic encapsulation is permitted. The mounting of these components shall be as specified in 3.5.2.8.2.1.

3.5.1.8 System grounding. - Components and parts within the CD-2 and its supporting equipment shall be grounded as specified in FAA-G-2100/1,

paragraphs l-3.5.9.2, I-3.5.9.2.1, I-3.5.9.2.2 and l-3.5.9.3. In addition, a common system grounding design criterion shall be used for the CD-2. The contractor shall submit the contemplated grounding scheme to the Government for review prior to beginning equipment production. The design shall be compatible with the other equipment with which the CD-2 will be operated. # Two separate ground systems shall be provided:

(a) One ground system shall be a permanent and continuous bonding of all noncurrent-carrying metal enclosures. This bonding shall be accomplished with bare copper wire, metal wireways, and metal conduit which interconnect all equipment cabinets, cable trays, and power panel enclosures. Also, this system shall consist of equipment grounding conductors (green safety) which shall be run with each set of power. feeders within the same raceway as the feeders. A separate green safety shall be provided for each power receptacle installed within the equipment enclosure.

(b) The other ground system (signal ground) shall provide a return or reference for all signals into or out of the CD-2 equipment.

The signal ground shall be isolated from the cabinet ground except that provisions to jumper them together shall be provided in each junction box (3.5.2.10) and in the one of the cabinets (3.5.2.1.2). Means to connect the CD-2 to external (building) grounds shall be provided at one of the cabinets, each junction box and, for the CD-2C, at each message console shelf (3.4.3.1.5.3.3). Thus, the CD-2 shall be able to be grounded at a maximum of two places (five places for the CD-2C). #

The equipment grounding conductor shall be installed and connected in accordance with Article 250 of the National Electrical Code (NFPA No. 70). Line filters, if used, shall not induce or conduct currents into the signal ground bus or the equipment grounding conductor.

The contractor&all be responsible for providing a CD-2 grounding system which will not degrade the operation or safety of associated equipment. There shall be no degradation of signals between CD-2 cabinets or the CD-2 and external equipment because of cross-coupling through the grounding system. Return paths for signals between CD-2 cabinets or between the CD-2 and external equipment shall use the shield of coaxial cable, or if coaxial cable is not used, a separate signal return wire shall be provided for each signal path. The equipment grounding conductor shall be sized in accordance with Table 250-95 of the National Electrical Code.

The size of each internal ground wire shall be at least 500 circular mils per linear foot (0.83 mm^2/m) or 1600 circular mils (0.81 mm^2), which ever is larger. Thus, a 50-foot (15 m) ground wire would be 25,000 circular # mils (12.7 mm^2) or larger. Ground wires to the junction boxes and the CD-2C's message shelves (3.4.3.1.5.3.3) shall be at least 40,000 circular # mils (20.3 mm^2). Paragraph l-3.3.3 of FAA-G-2100/1 shall apply to the CD-2 and all supporting equipment delivered under its acquisition contract. # All grounding systems bonds shall have a dc resistance of one milliohm or less as measured between the bonded members with a four-terminal milliohm meter. #

3.5.1.9 Conducted and radiated electromagnetic interference. - The CD-2 and supporting equipment provided under the contract shall be designed and constructed to meet the emission and susceptibility requirements of MIL-STD-461A as amended by Notice 4 (EL), dated February 9, 1971, for ground electronic data processing equipment.

3.5.2 Mechanical design requirements. The mechanical design of the CD-2, including cabinets, controls, displays and electronic modules and assemblies, shall be as specified in the following subparagraphs.

3.5.2.1 Construction and packaging. - The CD-2 and its supporting equipment shall be constructed in a modular fashion to the greatest extent possible, such that the maintenance, reconfiguration flexibility, and other requirements specified herein can be easily met. Except as otherwise permitted by 3.5.1.4 herein, the CD-2's modules (3.1.1) shall be implemented using plug-in circuit card assemblies (CCA), card bins and power supplies in physically independent drawers or slides in a larger cabinet or rack. This requirement does not alter any other requirements (electromagnetic interference, maintainability, reliability, system performance, etc.) established herein. The design shall provide for good accessibility by personnel whose body dimensions fall within the 5th and the 95th percentile as specified in paragraph 5.6 of MIL-STD-1472. The accessibility shall permit easy and convenient operation, calibration, viewing and maintenance of the CD-2's panels, controls, displays, units, modules, wiring, CCAs and components as specified by paragraphs 1-3.4.9 of FAA-G-2100/1. Accessibility may be improved using extenders as specified in 3.6.3.2. Each unit and module shall be able to be removed from the equipment cabinet without requiring the partial # or complete disassembly or removal of adjacent units, modules or cabinets. # The design shall provide a neat and pleasing appearance, with and without. access doors in place. The design and construction of the CD-2 shall be subject to acceptance by the Government.

3.5.2.1.1 Physical size. - The equipment specified herein shall be able to be easily installed in buildings with 36-inch (0.9 m) wide doors and ceiling heights of 96 inches (2.4 m). The dimensions of individual cabinets
shall not exceed 83 inches (2.1 m) in height, 36 inches (0.9 m) in depth or 24 inches (61 cm) in width except that the maintenance console shall not exceed 30 inches (76 cm) in width. Smaller dimensions are desirable, providing that accessibility is not degraded. These dimensions exclude handles, cable ducts and connectors, which shall add no more than 2.0 inches (5.1 cm) to these values. These dimensions also exclude the maintenance console's writing surface, which shall be no wider than the console and shall add no more than 15 inches (38 cm) to its depth.

3.5.2.1.2 Cabinets. - Each CD-2 shall be contained in not more than three cabinets, except for the CD-2B configuration, which shall consist of no more than two cabinets. A single cabinet shall contain both BTEs in the CD-2B. A possible cabinetry configuration is shown in Figure 10. The cabinets shall be of high quality, sturdy construction, and shall be accurately and carefully constructed. Each cabinet shall be designed for front access only, to permit location of the cabinets next to walls and other equipment. The design shall not require open spaces on the sides or rear of the cabinet. For all configurations except the CD-2B, a single CD-2 channel (except, of course, for the solitary maintenance console) shall be contained within a single cabinet in order to facilitate maintenance operations.

The structural strength and rigidity of the equipment units and cabinets shall be such that handling during loading, shipping, unloading and positioning or the prolonged extension of drawers or slides does not result in any permanent set or deformation sufficient to impair the operability or appearance of the cabinets and mechanical parts thereof. Specifically, ease of maintenance, movability of modules or access doors and the integrity of ventilation equipment shall not be impaired. These requirements shall not be dependent on any structural strength or rigidity provided by access doors or removable modules or drawers. Steel may be used for the cabinets of the CD-2, including the message consoles provided with the MIG, provided that all other requirements herein are met.

Cabinets and equipment shall not exceed a concentrated floor loading of 700 pounds per square foot (3400 kg/m^2) measured on a 2.5 inch (6.4 cm) diameter circle. The distributed floor load shall be less than 250 pounds per square foot (1200 kg/m^2). Adjustable leveling pads that accomodate floors with variations of up to 0.5 inch (1.2 cm) from level over the cabinet floor area shall be provided at the bases of the cabinets.

The cabinets shall be designed such that it is not necessary to fasten or bolt them to the floor to prevent tipping when the modules are removed or fully extended
or both. The opening of an access door and extending of a module shall
not interfere with similar operations on adjacent modules. Access to all parts of an extended module shall be possible without undue contortion by maintenance personnel or their exposure to hazardous voltages or mechanical devices. When cabinet lifting points, such as hooks or rings, are installed for convenience in handling, such devices shall be removed by the contractor after installation and replaced with suitably finished cap bolts. Blank panels shall be provided for any unused module space.

3.5.2.1.3 Modules. - Each module shall be separately hung and adequately braced, shall weigh 50 pounds (23 kg) or less (except for the maintenance console), and shall be able to be removed and replaced by one unassisted technician. The module's power supplies may be separable from the card case when necessary to meet these requirements. The modules with front panel controls or indicators shall contain a minimum of 10 percent spare front-panel space for future additions and modifications. All modules, except the maintenance console, shall be mounted on hinges, slides or drawers which, when fully extended, can pivot up to 90 degrees if required to provide the necessary access to the rear of the module and the wiring, connectors and similar items in the interior of the cabinet. Handles shall be provided to facilitiate these operations. Circuit card assemblies (CCA) shall be mounted in an isolated card bin, and mated with a mother board or backplane. The wiring side of the backplane shall be easily accessible for modification or troubleshooting without any disassembly of the module. In the event that swing-out slides are used, their design shall prevent any part of the backplane-from coming within 0.5 inches (1.2 cm) of any fixed cabinet part. The backplanes shall have easily removable protective covers. All active components and those passive components with appreciable contributions to the failure rate of a CD-2 channel shall be mounted on the modules to permit easy accessibility. Cabling and ventilation components may be mounted in the cabinet, providing that good'access is provided. Spot welding may be used in the manufacture and assembly of the card bins when it is not detrimental to the operation, maintenance or service life requirements herein.

Plug-in CCAs and other plug-in assemblies, such as converters, power supplies and similar items, shall be mounted side-by-side, bookcase style in the card bin. Each card location shall be provided with full length guide strips or rails to ensure easy installation of the cards and positive alignment of the mating connectors. A minimum of wired-in assemblies shall be designed into the CD-2. In particular, no wired-in CCAs, digital-to-analog converters, external interface signal receivers or drivers, power sensing and control boards or similar assemblies shall be permitted without specific and individual written approval from the Contracting Officer.

3.5.2.1.4. Reserve capacity. - In addition to the reserve capacity required within each module (3.4.1.8), space for the future addition of more modules shall be provided in each channel cabinet. The cabinet for the CD-2B shall accommodate two modules which are the size of the BTE, one associated with each channel. The CD-2 channel cabinets in the other configurations shall accommodate the addition of one STE-sized module and one BTE-sized module to each channel. These spaces, which are reserved for a planned MTD processor (3.4.3.2) and a possible AMPS processor (3.4.3.3) respectively, shall be adjacent to their respective CD-2 modules. The spaces shall be wired with supply line power and a port to the channel's system data bus (3.4.2.2). The areas shall include cable entry provisions and slides and related hanging hardware for easy mounting of modules with designs similar to the CD-2 modules. A removable blank front panel shall cover the spaces.

3.5.2.1.5 Maintenance console. - The MC shall be designed and constructed to permit sit-down control of the CD-2 and control and viewing of its displays. Design of the console and the selection and location of its controls and printer shall be in accordance with good human engineering and safety practices as prescribed in paragraph 1-3.4.13 of FAA-G-2100/1. The location, size, accessibility and configuration of the displays, printer and their controls shall permit safe and efficient operation by persons whose body measurements are as specified in 3.5.2.1 herein. The printer's output and the displays shall be readily viewable by, and all controls within the reach of, an operator seated in froht of the MC. A fixed horizontal writing surface which is useable from the same position shall be provided, as shall a seat (chair or stool) which meets the seating requirements of MIL-STD-1472, paragraph 5.7.3.4 except that armrests are not required. The console shall be mobile (while operational) if that is necessary to satisfy the accessibility requirements herein. A viewing hood shall be provided for the plan position display if necessary to meet the visibility requirements herein.

3.5.2.1.6 Height finder message shelf console. - The two message shelf consoles provided with the MIG shall be free-standing units which fit easily in front of the RHI displays. They shall provide for sit-down operation and viewing of the console and the RHI display. The design of the console and the selection and location of its controls shall be in accordance with FAA-G-2100/1, paragraph l-3.4.13. The console shall be able to be attached to the RHI for convenience of operation.

3.5.2.1.7 Internal cabling and wiring. - All internal single or bundled wires and cables which interconnect modules or cabinets (including those between the MIG and its message consoles) shall be suitably protected against chaffing, abrasion and flex- or twist-inflicted damage.

This protection shall be independent of the individual wire or cable insulation or jacket. Cables and wires carrying primary line power shall be separated from signal and control cables and wires. Interconnecting wiring between backplanes or mother boards within modules shall enter and egress from connection pinslprovided near the edge of the backplane specifically for this purpose. Front panel connections and cabling shall be limited to those required for maintenance (3.5.2.8.5.4). All inter-cabinet cables shall enter and exit the cabinets through protected access holes in the sides of the equipment. Suitable clamps, strain relief and cable dressing facilities shall be provided to protect the cable and connectors (3.5.2.8.5.3) from pinching, wear and abrasion during installation, removal, shipment and maintenance activities.

The provisions of paragraph l-3.10 and all applicable subparagraphs of FAA-G-2100/1 shall apply except that wire as small as AWG 30 is acceptable for logic level signals to and from microelectronic devices. Also, the color coding scheme of l-3.10.6.2 shall not be used. Wire wrap techniques are permissible as specified in 3.5.2.8 herein. NASA soldering techniques
shall not be used. In addition, the cabling requirements of paragraph l-3.10.7 of FAA-G-2100/1 shall be expanded to permit the use of either transparent or black plastic tubing to mechanically protect those portions of cables subject to abrasion.

The current rating of wire shall be in accordance with the following table in lieu of paragraph l-3.10.5 of FAA-D-2100/1, except that for ac supply line wiring (120/208 V, 60 Ha), the National Electric Code (NFPA-70) shall apply.

WIRE SIZE (AWG)	MAXIMUM CURRENT (A)
30	1.0
28	1.25
26	1.7
24	3.0
22	3.5
20	4 . 0
18	6.0
16	9.0
14	10.0
12	12.0

#

3.5.2.2 Personnel safety and environment. - The CD-2 and all supporting equipment shall meet the requrrements of paragraph l-3.5 and its sub-paragraphs of FAA-G-2100/1 except as modified below. No radioactive parts, materials or elements are permitted in any equipment specified herein. Noise level limits shall be as specified for condition A ,and shall apply to the simultaneous operation of all equipment including the printer, unless the contractor can demonstrate that a significant cost increase is the result solely of the application of this requirement to the printer. 'Electromagnetic radiation within three feet (one meter) of the equipment shall not exceed a power level of 5.0 mW per square centimeter at any frequency.

3.5.2.2.1 Safety grounding rods. - Adequately insulated grounding rods shall be provided and Installed on hooks on the inside of all cabinets which contain working voltages of 500 volts or more. Each rod shall have its grounding strap permanently attached to the cabinet ground and shall be able to safety conduct a current of at least five times that of the largest power supply source in the cabinet.

(Blank)

3.5.2.2.2 Cabinet illumination.- Shielded lights for the illumination of the interiors of each cabinet shall be provided unless, in an ambient room illumination of 40 footlamberts (137 cd/m^2), the amount of roan light at the darkest interior cabinet location that has wiring, connectors
or module mounting hardware is 25 footlamherts (86 cd/m^2) or more. Activation of the light(s), if provided, shall be accomplished via a manual switch located on the main ac power panel. An indicator shall be provided next to or as part of the switch to indicate the status of the light(s).

3.5.2.3 Convenience outlets. - Two recessed duplex convenience outlets shall be provided on the bottan front of each cabinet. The outlets shall meet the requirements of paragraph l-3.6.4 of FAA-G-2100/1.

3.5.2.4 Cabinet ventilation and cooling. - The thermal design of the CD-2 and supporting equipment shall be in accordance with paragraph l-3.4.7 and l-3.9 (and associated subparagraphs) of FAA-G-2100/1 as amended below. No glass wool air filters shall be permitted. The thermal design shall accommodate continuous operation over the range of service conditions without using external cooling devices. All blowers, vents and related cooling equipment necessary for effective ventilation and cooling of the equipment shall be provided. Each cabinet requiring forced ventilation shall contain its own blower system and shall not require external ducts. The design shall be such that with any or all access doors open and any or all modules extended or removed, the equipment shall not develop hot spots exceeding 55 degrees Celsius during an eight hour period when the ambient temperature is +30 degrees Celsius. The MIG's message consoles shall meet these requirements without the use of forced air ventilation.

The air intakes shall be near the floor and their associated filters shall be accessible without opening any access doors. The exhaust outlets shall be at the top of the cabinet and shall prevent foreign objects from entering the cabinet through the exhaust opening. Individual module ventilation equipment may also be used if necessary to meet these requirements.

Motors shall be reliable, continuous-duty units with good accessibility
for maintenance and testing. The motor speed shall not exceed 1550 rpm. The bearings shall be roller or ball bearings or equivalent. The impellers shall be dynamically balanced. It shall be possible to remove power from any fan and-remove the fan itself for servicing purposes without removing power from the CD-2 cabinet or module. The cabinet'or module equipment shall be able to operate normally (with the modules extended if necessary) for at least four hours in this condition. Each motor shall be protected as required by FAA-G-2100/1, paragraph l-3.7.1, except that no fuses or multiphase motors shall be permitted. Wanlass or other efficient motor design shall be used where possible.

3.5.2.5 Overheat condition detection and reporting. - The CD-Z shall contain at least one thermal sensor per power supply or one sensor per module, whichever yields a greater number of sensors. In addition, one sensor shall be located in the exhaust air flow of each cabinet with forced ventilation. The sensors shall provide the temperature of each location to the status monitor of the appropriate channel. It is permissible to use a single digital thermometer and multiplex the various inputs. The status monitor shall contain two factory-established thresholds for each sensor location. The thresholds shall provide indications of normal, elevated and overheat temperature conditions. An abnormal condition at any sensor shall be indicated by one or both of the temperature alarm indicators (elevated and overheat) on the status and -alarm panel and, if enabled, its audible alarm.

The temperature at each sensor location and the two thresholds applicable there to shall be able to be displayed on the tabular display as selected from the front panel of the maintenance console.

3.5.2.6 Finishes. - All CD-2 equipment shall be finished as required by paragraph l-3.8, and all applicable subparagraphs, of FAA-G-2100/1. In no instance, shall a finish interfere with the grounding, electro-magnetic interference, performance or mechanical operation of any portion of the CD-2. The cabinet exteriors shall be finished with color number 30372 of FED-STD-595, and shall have a smooth, lusterless texture.

3.5.2.7 Dissimilar metals. - Dissimilar metals exhibiting an electrolytic potential difference greater than 0.4 volt when immersed in a three percent sodium chloride solution shall not be used in intimate contact unless protected against electrolytic corrosion with appropriate protective methods and materials.

3.5.2.8 Mechanical design of electronic components. - The mechanical designs and mounting of the electronic assemblies and components used in the CD-2 and supporting equipment shall be as described in the following subparagraphs.

3.5.2.8.1 Backplane. - Using the appropriate special tools and ancillary items (3.6.3.4), the backplanes or mother boards into which the circuit card assemblies (CCA) are-inserted shall be able to be rewired in the field to change the distribution of signals within a module. Standardized # power distribution buses shall be established and permanently connected # to all CCA connectors, including the spare ones provided in acccordance with 3.4.1.8. The backplane shall be suitable for connection of test equipment as specified in 3.6.

3.5.2.8.2 Circuit card assemblies. The CCAs used for digital logic Integrated circuits shall incorporate dual-in-line packages. The individual integrated circuits (including PROMs, processors, etc.) shall be able to be removed intact and replaced by average technical field personnel in less than 90 seconds using test equipment recommended for, or provided with the CD-2 (3.6). A minimum of ten removal and replacement cycles at a given chip location shall be able to be performed in this manner at up to ten chip locations on up to 50 CCAs without causing failure of the CCA or a degradation in the CD-2's reliability below the requirements of 3.9.2 herein.

CCAs containing discrete semiconductors, linear integrated circuits and their supporting components shall be able to have their active devices removed and replaced in accordance with these same requirements, except that the removal-replacement time is changed to less than five minutes.

All CCAs shall be able to be repaired when any component thereon fails, for the full service life of the CD-2 in its normal operating and maintenance environment. The maximum size of any CCA shall be 11.0 by 14.0 inches (27.9 by 35.6 cm) or less. No conformal coatings shall be permitted. The CCAs of a given type shall be mechanically and electronically interchangeable.

The minimum number of types of CCAs necessary to implement the requirements herein shall be utilized. All CCAs shall be able to be inserted and removed with power applied to the module without causing oscillations or damage to any components and without requiring removal and reapplication of power to reinitialize the operation.

3.5.2.8.2.1 Component mounting. - All semiconductor and integrated circuit components shall be mounted as specified in paragraph 3-3.2 of FAA-G-2100/3 and paragraph 5-3.1 (c) of FAA-G-2100/5 respectively, unless other mounting techniques (e.g. sockets) are necessary to meet other requirements herein. In the event that such deviation is necessary, the contractor shall obtain the Contracting Officer's approval by submit-ting the appropriate technical justification, including the changes, if any, to the calculated reliability and service life of the equipment, indicating values with and without the deviation. All electronic parts shall be attached such that each part is amenable to removal and replacement by on-site electronic technicians.

3.5.2.8.2.2 CCA Alterability.- To enhance the ability of the circuit card assemblies in the CD-2 and its supporting equipment to meet future requirements, all CCAs shall be able to be modified to alter their original functions, logic operations or component interconnections. In order to provide the required alterability, CCAs consisting entirely of'integrated circuits and their necessary passive supporting components such as capacitors, diodes, etc., shall use discrete point-to-point wiring on the opposite side of the CCA from the integrated circuit chips, unless the contractor has received specific written approval from the Contracting Officer for each such CCA type. The approval will be granted only upon technical justification to the Government that the required ability to alter the CCA's circuits or their functions can be accomplished by other means satisfactory to the Government (e.g. reprogramming of the appropriate microprocessors). Multi--layer printed wiring or similar techniques which produce inaccessible component interconnections may be used for this type of CCA only with this specific approval.

All other types of CCAs, including all assemblies that provide interface signals to or from equipment external to the CD-2 on its supporting equipment, shall utilize discrete point-to-point wiring. Alternatively, printed wiring techniques in which all intercomponent connections are accessible maybe used for these CCAs. Both sides of the board maybe used for such printed wiring, provided that the accessibility requirement is met.

Wrapped circuit connections meeting the requirements of 3.5..2.g.3 or multi-layer soldered wiring may be used as discrete point--to-point wiring. Regardless of which of these two approaches is chosen, its strength, reliability, wear-resistance and modification characteristics shall be satisfactorily demonstrated to and approved by the Government before it is used in production equipment.

3.5.2.8.2.3 CCA baseboard. - The CCAs shall be sufficiently rigid to prevent damage to the conductive patterns during manufacture and subsequent handling during maintenance and testing.

All CCAs shall provide a convenient and positive means of removal from and insertion into the module's card bin without the use of a separate tool. Handles, finger holds or similar means may be used. The selected technique shall permit easy removal and insertion without damage or undue strain on the module frame, the components and wiring on the CCA, or the connectors on the CCA or module. The maximum insertion or extraction force for any CCA or other plug-in assembly shall be less than four pounds (1.8 kg).

All CCAs shall conform to all applicable paragraphs of FAA-G-2100/4 except that one-part connectors and baseboards meeting the requirements of paragraph 5.7.4.2 of MIL-STD-275 are permitted and that reference designations shall be as specified in 3.5.2.11 herein. The minimum spacing between uncoated traces as given in MIL-STD-275 is modified to allow separations as small as 0.010 inches (0.25 mm) for traces with relative voltage differences of no more than 30 Vdc.

3.5.2.8.3 Wrapped connection.- Wrapped wire connections may be utilized on backplanes and digital logic CCAs to provide the required modification ability. Wrapped connections shall meet all requirements of MIL-STD-1130 except that tin-lead plated wrapposts need not be reflowed. (This is a specific modification to the second sentence of paragraph l-3.10.10 of FAA-G-2100/1. As a second modification, add "MIL-STD-1130A, Solderless Wrapped Electrical Connections, dated Feb 26, 1976" to FAA-G-2100, Supplement 4).

3.5.2.8.4 Controls. - All circuits shall be designed so that no damage can occur when the equipment is operated with any possible setting of the internal adjustments or operating controls. Protective devices shall not be activated with the activation of any operational control. There shall be no noticable lag between the activation or adjustment of a control and the effect of the activation or adjustment. All continuous or multi-position controls shall have calibration markings to permit setting them to predetermined positions, except where it can be-demonstrated to the Government that such markings are unnecessary or impracticable. Motor-driven switches and controls are prohibited.

Frequently used or calibration controls on the interior of the CD-2 shall be accessible without disassembly or otherwise making the affected module inoperative. Frequently-used controls on CCAs shall be accessible without removing the assembly from its normal position. All controls shall be mounted so as 'to minimize the possibility of personnel contacting high voltages or hot components, and shall be in accordance with FAA-G--2100/1, paragraphs l-3.16.4 and l-3.16.4.1 .

The term "simple internal means" as used herein shall indicate that the specified function shall be controlled by an internal control or other means. Acceptable techniques include wirestraps, plug-in jumpers, dual in-line-packaged (DIP) switches and rotary controls mounted on the appropriate CCA. The term "simple and convenient internal means" shall include all of the techniques described above except that wirestraps or jumpers are prohibited and the switches or rotary controls shali be accessible without placing-the CCA on an extender or otherwise disrupting the module's operation.

3.5.2.8.5 Connectors. - The connectors furnished with the equipment shall conform to the requirements of the following subparagraphs and to paragraph l-3.16.3 and its subparagraphs of FAA-G-2100/1 with the following modifications: replace the last sentence in paragraph l-3.16.3.1) with: "All electrical connectors used in the equipment shall be in accordance with requirements of this specification and, except as specified in l-3.6.6 and 1-3.16.3.3 hereof, shall be in accordance with MIL-STD-454, Requirement 10 with the proviso that paragraphs 10, 10.1 and 11 of Requirement 10 shall not apply." In paragraph 1-3.16.3.7, replace the second sentence with: "Test jacks shall accommodate a test probe having a diameter of 0.080 + 0.001 inches (2 ± 0.03 mm)."

3.5.2.8.5.1 CCA connectors. The number of pin connections per circuit card assembly shall be 210 or less, not including test points. The connector receptacles and the CCA connector shall be polarized and keyed such that CCAs can be inserted with the correct sense only, and that only the proper type of CCA can be inserted in a given location. The keying method shall not affect the number of available connector pins. In the event that polarizing keys are used, they shall not be able to he removed during normal insert-remove operations. The particular edge board (one-part) connector to be used (3.5.2.8.2.3) shall be approved by the Government before it is used in any deliverable equipment: Mating connectors shall be designed for repeated use and long-term reliable performance without jamming or damage as the result of frequent insertion of card assemblies. At least 100 casual (as contrasted with "careful") insertion and removal cycle of the CCAs shall be possible without damage or degraded operation or reliability.

3.5.2.8.5.2 CCA test points. - Sufficient test points and connectors shall be provided on all CCAs to meet the automatic diagnostic requirements of the CD-2 card tester (3.6.3.1).

3.5.2.8.5.3 Inter-module and inter-cabinet connectors.- The signal and power cabling between modules and between cabinets shall be provided with separate connectors to permit separation of cabinets and removal of modules. A single set of connectors shall be provided at the cabinet and module interfaces. Terminal blocks may be used for inter-cabinet cables, in which case they shall be protected with a removable plastic cover with round access holes over each terminal for screwdrivers.or test probes. All internal cabling shall include provisions for testing the continuity of each conductor. Terminal blocks, where used;'shall meet this requirement with the access specified above, and shall be in accordance with paragraph 1-3.16.11 of FAA-G-2100/1. Connectors, including those for ribbon and other multi-conductor cables, shall provide test Points for in-circuit signal observation or injection, or shall have

test points available on backplane or CCA entry points for each conductor. Threaded connectors shall be used to connect the cables to the MIG's message consoles in the USAF operations area; however, all inter-module and inter-cabinet connectors shall provide for a positive and reliable connection in the presence of reasonable physical stress in the area of the connection. Spare pin3 (conductors) equal to at least 20 percent of those utilized, but not less than two of each type, shall be provided at each connection.

3.5.2.8.5.4 Module test points.- Test points shall be provided for measurement and observation of such voltages and waveforms as are needed for the checking of performance and for the maintenance of individual modules. Test points for signals requiring frequent observation, adjustment or alignment shall be provided on the front panel of the module or other assembly. The test points for these particular signals shall be accessible without interruption of the circuit operations or the use of extender cards. All other test points shall be located on the card bin, backplane or edge connectors of CCAs as appropriate. Each test point shall be suitable for "hands-off" connection of test equipment probes and clips. The extender card (3.6.3.2) may provide test point to meet this requirement for CCAs. All test points shall be identified with a TP number. Those permanently connected to a signal shall have a voltage, waveform, or other descriptive title adjacent thereto, except where limited by space considerations, as on a CCA. Power supply output voltages, internal data and address busses, clocks, and input-output signals at a minimum shall be available at each module's test points. All test points shall be isolated such that test equipment loading effects, including short circuits, do not affect 'the source of the test point data. The equipment shall be designed to provide access to the signals and connections for the test equipment as may be required for expeditious maintenance, calibration; and repair.

3.5.2.8.6 Front panel indicators.- All front panel indicators, including the power on-off indicators on each module, the status and alarm panel indicators, and the indicators on the MIG's height finder message consoles, shall be in accordance with paragraph l-3.16.5.1 of FAA-G-2100/1, except for indicator color and except that light-emitting diodes or other display media meeting the requirements herein may be used. All al arm or abnormal operating conditions in the CD-2 shall be indicated by the bright red illumination of the appropriate indicator or legend. White or amber shall indicate status of CD-2 controls and external equipment. Separate green indicators shall denote the power-applied and operational status for each CD-2 module.

A non-resettable, accumulating meter or display which indicates the total CD-2 operating time shall be provided on the front panel of the maintenance console. It shall consist of at least a five-digit display, with a roll-
over capability and with the least-significant digit equal to one tenth of an # hour. An indication of the operating status of the meter or display shall be included.

No other electrical indicating meters shall be permitted.

3.5.2.8.7 Front panel controls.- The front panel controls of the CD-2's maintenance console and height finder message console shelves shall be designed for reliable service during the rugged conditions of nearly constant operation and use. All control assemblies shall be able to be maintained and repaired by site technicians.

3.5.2.8.7.1 Maintenance console controls.- The trackball or joystick (isometric stick) used to control the cursor shall be a simple, reliable unit which can survive constant use and the environment of an operator's console (spilled liquids, ashes, etc.). It shall provide smooth control of the cursor with an ability to rapidly position the cursor anywhere on the plan position display, with the accuracy required to select targets which are within the cursor's approximate displayed size. It shall meet all applicable requirements of the MIG console's trackball (3.5.2.8.7.2).

The data entry devices shall be simple, reliable units which meet the applicable operating requirements specified above for the cursor control. If a keyboard is used, it shall be a self-contained, replaceable unit capable of meeting the service life requirement under constant daily use.

3.5.2.8.7.2 MIG message console trackball.- The trackball shall be a weighted sphere designed for ease of movement, positive positioning and normal right-hand operation. The trackball assembly used shall be identical to one already in the FAA inventory as part of the AN/FYQ-47, ARTS-III or the plan view displays, unless specific written approval is obtained from the Contracting Officer. The tangential force required to activate the control shall be at least one ounce (0.3 N) but not more than three ounces (0.8 N). The surface of the ball shall not have any sharp edges but shall provide an excellent feel or touch to the operators. The controls shall be constructed of suitable materials which will provide a long service life in continuous use. The physical separation of the control from the other components on the panel shall be sufficient to preclude accidental activation of adjacent controls during normal operation. The diameter of the ball shall be at least 2.75 inches (6 cm) but not more than 3.25 inches (8.3 cm), and it shall weigh approximately two pounds (0.9 kg). The control shall protrude not less than 0.5 nor more than 1.0 inches (1.3 to 2.5 cm), preferably 0.75 inches (1.9 cm), above the plane of the panel in which it is mounted. The control shall be mounted such that only the active element of the control protrudes above the panel. The control shall be properly designed and sealed to prevent foreign matter from 'coming into contact with internal parts and hindering operation.

3.5.2.8.7.3 MIG message console controls.- The read-in and cancel controls are high-usage devices and shall be capable of at least two million operations without a failure. The controls shall be so designed and located on the console shelf as to allow fingertip operation. They shall provide a positive make action which can be felt in the fingertips. The controls shall be backlit with no hot spots or uneven illumination. Each control shall be serviceable from the front of the panel and shall be engraved to indicate its function. The read-in button shall be located such that it is associated with the trackball using the human engineering criteria specified in paragraph l-3.4.13 of FAA-E-2100/1.

3.5.2.9 Cable entry and exit locations.- All power, signal and ground cables connecting the basic CD-2 cabinets to external equipments shall enter and exit the CD-2 at the top of the cabinet containing the maintenance console.. A single cable connection area shall be provided to minimize external duct work. Cable entrances and exits shall be designed to enable advantageous routing of cables within and between cabinets from the standpoints of accessibility, serviceability, appearance of the installed equipment and non-interference with the activities of operating and maintenance personnel. All necessary connectors shall be provided. All special tools required for cable fabrication or connector removal or installation shall be provided as specified in 3.6.3.4. The length of the external equipment cables shall be as determined by the Government for the individual site receiving the particular CD-Z. #

3.5.2.10 CD-2 junction box,- All signal and ground cables connecting the basic CD-2 cabinets to external equipment? -including the daisy-chain outputs (3.4.3.1.3.1), shall be connected to a single junction box. The power cables and ground shall be routed directly to the local power panel. The cables connecting the MIG with its remniely-located height finder message consoles shall be connected to the junction box en route to the USAF operations room. All signal cables brought to the junction box shall be connected to the appropriate feed-through BNC or terminal strip connectors. A heavy-duty T-connector shall be provided on all BNC connectors to facilitate connection of test equipment without disruption of the signal to be observed. Means to connect the signal and cabinet grounds (3.5.1.8) along with a stud for making a connection to a building (earth) ground shall be provided in each junction box. The junction box shall be the interconnection point for the CD-2 and its associated radar and data transmission equipment. It shall be located near the CD-2, and its front dimensions shall not exceed 36 inches high by 45 inches wide (0.9 x 1.1 m). The basic CD-2 junction box shall be the same for all CD-2 configurations or, at the contractor's option, may exist in two types : CD-2 A/C/D and CD-2B, with a separate military junction box to accommodate connections unique to the MIG. The digital and voice frequency sides of the modem equipment shall be able to be routed through the junction box. The contractor shall submit a listing or drawing of the signals in, and the layout of, the junction box to the Government for review before beginning its production. At least 20 percent spare coaxial and 20 percent spare terminal board connectors, and at least 10 percent blank, usable space shall be provided in the junction box for future applications. At least 20 percent spare conductors or cables shall be provided for each type of conductor (except grounds) between the CD-2 and the junction box. The ends of these spare wires shall be secured in safe but accessible locations within the CD-2 and the junction box. They shall be individually and permanently identified by numbers or other designations on their outside jackets. Two unused cables from the GPA-124 shall be able to terminate in the junction box. Each cable entering or leaving the junction box, together with its connector, shall be clearly identified. The junction box shall be able to be mounted on a wall or similar vertical panel. It shall not weigh more than 100 pounds (45 kg). The junction box shall completely enclose the electrical connections. Access to the connections shall be provided by two doors which can be positively latched in their closed positions;.

3.5.2.11 Reference designations and marking.- The CD-2 shall have its test points, cable terminations, jacks, controls, modules, card bins, assemblies, and front panels clearly and permanently marked to show their intended functions and locations, designations and titles. The reference designations shall be in accordance with paragraph l-3.11 of FAA-G-2100/1 except that the paragraph reference in paragraph 1-3.11(b) is changed from "3.1.5.5" to "4.1.5.5", and that paragraph 1-3.11(c) of the FAA specification shall not be used. The marking shall be accomplished as specified in paragraph 1-3.12 and all applicable subparagraphs of FAA-G-2100/1, except that the requirements of subparagraph 1-3.12.2 are not applicable where it is impractical, such as with automatic parts insertion devices. Also, the requirements of subparagraphs l-3.12.8 et al are not applicable to this equipment. The requirements of paragraph 4-3.4 of FAA-G-2200/4 shall apply, except that the CCA's reference designation or correct card type or both shall be provided on the card bin for each occupied card slot. Line drawings in the equipment's instruction book shall be used in lieu of charts (FAA-G-2100/4, paragraph 4.3.4) to convey the reference designations and positions of parts on CCAs and similar assemblies. Each CCA and any other plug-in assembly shall include identification markings which identify the basic circuit function and reference designation of the unit of which it is a part.

3.5.2.12 Moisture pockets.- The equipment shall be constructed in accordance with paragraph l-3.4.6 of FAA-G-2100/1. Canponents and wiring subject to damage by immersion in water, with power applied or not, shall not be mounted in the lower four inches (10 cm) of any cabinet.

3.5.2.13 Other requirements. - The other requirements of FAA-G-2100, paragraphs l-3.4 through l-3.16.23, which are not specifically called out elsewhere herein, shall apply, except that in lieu of the requirements of paragraph 1-3.14.5, good commercial practice is acceptable for mounting of small electronic parts on CCAs.

3.6 Maintenance and test equipment.- The CD-2 and its supporting equipment shall be designed and constructed such that, except for the special and built-in test equipment specified herein, standard test equipment may be used for effective and efficient maintenance and adjustment of all CD-2 equipment. The design of the CD-2 equipment shall emphasize the use of standard test equipment, tools, and fixtures and shall minimize the necessity for special test equipment.

The circuitry and equipment built into the CD-2 and its special supporting equipment to perform the required self-test and performance diagnosis functions shall not be affected by the requirements of this paragraph or its subparagraphs.

3.6.1 Standard maintenance equipment.- Standard maintenance equipment is defined as the tools and test equipment which are a part of a manufacturer's standard product line and which are available off the shelf. In this context, "off-the-shelf" equipment is that which, at the time of the CD-Z proposal submission, has been produced, sold, delivered, and has performed its designated function for at least one year. As established in the contract schedule, the contractor shall. provide a list of recommended standard maintenance equipment and related accessories necessary for the installation, maintenance, alignment, and performance testing of the CD-2 and its supporting equipment. The list shall be prepared as specified in 3.12.2.4. The recommended equipment should be available from more than one manufacturer. It shall. be solid-state insofar as is practical, and shall meet or exceed the maintainability and reliability requirements of 3.9.2. (Other than as required by 3.6.3.4 herein, this specification does nor require the contractor to furnish standard maintenance equipment except when such equipment is contained within, built into, or otherwise a permanent part of the special maintenance equipment and is fully spared and documented as such.)

3.6.2 Special maintenance equipment.- Special maintenance equipment is defined as all tools and test and support equipment which does not qualify as standard maintenance equipment and which is necessary for support and maintenance of the CD--2 equipment. Off-the-shelf equipment that required modification to perform the required function is considered to be special maintenance equipment. All items of special maintenance equipment required to perform the necessary support and maintenance tasks, even if not explicitly specified herein, shall be provided by the contractor as required by the contract schedule, and shall meet all applicable construction and performance requirements of this specification. The special equipment shall meet the service life, reliability, maintainability, and other applicable requirements herein, except that it shall only be required to operate under the service conditions of Environment I, FAA-G-2100/1, paragraph l-3.2.23 (b), in lieu of Environment IX as specified in 3.3.2.1 herein, Standard maintenance equipment may be utilized with the special equipment providing that suitable adapters, test jacks, probes, patch cords, and the like are furnished with the special equipment.

As established in the contract schedule, the contractor shall provide for Government approval, a complete list of required CD-2 special maintenance equipment, the applications of each item, and the units or components for which each item is required. The list shall be separated into two parts: those items necessary for on-site maintenance and those items necessary for repair and support at a depot-level facility.

3.6.3 CD-Z support equipment.- The following items of special (or items combining both standard and special) maintenance equipment, at a minimum, shall be provided for support of the CD-2 equipments.

3.6.3.1 Circuit card assembly test set.- A special test set shall be provided for fault diagnosis and verification of the correct operation of the CCAs used in the BTE, STE, CIM, MIG, MC and RHI shelf portions of the CD-2 system. These CCAs plus the trackball, keyboard and printer modules used in the MC shelf shall be able to be fully tested in this test set. Using the test points provided on the CCAs and other plug-in assemblies, the test set shall be able to test and troubleshoot the digital and analog circuitry on the assemblies. This process shall be automatic insofar as is practical. Using the automatic test and appropriate hand-held probes or manual test equipment, it shall be possible to isolate a single failure to a small group of active devices (integrated circuits, transistors, diodes, etc.). The average number of active devices in these small isolation groups shall be six or fewer per tested unit (e.g. CCA). Specific and written FAA approval is required of unit test diagnosis procedures in which the average number of active devices in the isolation groups of a tested unit exceeds six. Similar approval is required in the event the number of active devices in any one isolation group exceeds 12. The programs for the automatic test procedures for all testable assemblies shall be stored in an alterable read-only memory within the tester or, alternatively, on floppy disc or diskette, cassette-type magnetic tape or other suitable mass storage medium. Paper tape is prohibited for this application. In any event, the stored data shall be able to be altered using the program development set, but not using the CCA test set.

The CCA test set shall have a manually-initiated self-test routine which can isolate internal faults down to a group of no more than four plug-in assemblies or one hard-wired assembly. The test set (and its external data entry device # and data files, if applicable) shall be mounted on a mobile cart. The cart shall also include at least 150 bins which are in drawers or are otherwise protected from the external environment. These bins shall be sized such that they can individually hold at least four of any type of semiconductor or microelectronic device of a given size in its appropriate protective package which is used in the CD-2 or its supporting equipment. The quantities of the bins of the various sizes shall be approximately proportional to the quantities of the variously sized devices as they populate the CD-2 and its support equipment. #

3.6.3.2 Plug-in assembly extenders.- The contractor shall provide appropriate extender devices that permit plug-in assemblies which are normally inaccessible because of their locations within a card bin or a module to be extended such that all parts and wiring are accessible to maintenance personnel and test equipment. Two extenders shall be provided for each type of connector or unique plug-in configuration. The extenders of a given type shall be polarized to prevent incorrect insertion or insertion into an incorrect connector type, but shall not be keyed (in order to permit extension of different assemblies with the same connector type). The extenders shall permit full capacity operation of the extended assembly and the entire CD-2. Appropriate shielding of the extender and extended assembly shall be provided as necessary to meet this requirement. Plug-in assemblies with voltages in excess of 150V or connector currents in excess of 5A shall not require extension for access to parts and wiring for diagnosis, alignment, or monitoring.

3.6.3.3 Program development set.- A special piece of test equipment shall be provided to permit duplication, modification and verification of the existing CD-Z software programs and development of new programs for all programmable elements and devices in the CD-2 and its supporting equipment. The program development set shall be suitable fnr use at a depot or system support facility and shall be able to be used effectively by programmers who are only superficially acquainted with the CD-2's architecture. It shall be able to duplicate the contents of a RAM, ROM, or PROM memory chip into PROMs of the types used in the CD-2 equipment. Using the appropriate self-contained operating system, an operator shall be able to develop, modify, and verify routines or entire programs for the CD-2 and its supporting equipment, including the test procedures and programs used to test assemblies in the @CA test set. By means of an assembler program contained within the development set, it shall be possible to correctly program a PROM with the applicable CD-2 machine language version of the verified routine or program. The developed program and any program in a PROM of the type used in the CD-2 shall be able to be saved foa future reference via an appropriate storage medium (refer to 3.6.3.1). Paper tape and semiconductor storage media are prohibited for this application.

The program development set shall contain a manually-initiated self-test routine which can isolate faults down to a group of no more than four plug-in assemblies or one hard--wired assembly. The PROM programmer portion of the unit shall be a standard item of test equipment provided that such equipment can meet all of the requirements herein. In addition to the items required above, the program development set shall include:

(a). A table and chair which meet the human engineering requirements herein.

(b) A video display terminal.

(c) A keyboard entry device.

(d) A high-speed printer (175 characters per second or faster).

(e) A user system evaluation capability.

(f) A system analyzer capability.

(g) At least 64 k bytes of RAM storage.

The program development set shall be comprised of existing off-the-shelf equipment built to best commercial standards in lieu of the design requirements of FAA-G-2100/1, other portions of this specification or related specifications.

3.6.3.4 Special tools and ancillary items.- The contractor shall provide all of the special tools and ancillary items needed to support the installation, maintenance, and adjustment of the CD-2 and its supporting equipment. A list of these items shall be provided as established in the contract schedule. The following items shall be included as a minimum:

(a) Manual and battery-powered wire wrap and unwrap tools and related' chargers, strippers, etc. (if-wire wrapping is used in the CD-2 equipment).

(b) Connector installation and cable fabrication tools.

(c) All special purpose tools and jigs required to align, adjust, install, remove, or service any CD-2 component or assembly.

(d) Any unique or special tools or equipment, connectors, software, and similar items which are required to meet the bench repair time requirement of 3.9.2.

(Blank)

3.6.3.5 Input Simulator.- When required by the contract, the contractor shall deliver an input simulator which is capable of meeting the radar (beacon and search) input data and target requirements of 3.3 and 3.4.2.1 herein, as limited and modified in this paragraph. No Mode 4 capability is required, nor is the capability to simulate mti clutter residue, electronic radio-frequency interference, video offsets or mti noise spectral distributions, digital search videos, triggers or pulse inputs in excess of +15 Vdc, sine-wave ACP or ABP data, abnormal status line signals, analog beacon video, modem clocks at other than 2400 Hz, or height finder or military modem data to the MIG. Adjustment of pulse shapes and the target population and scenario generation capabilities shall be provided. The simulator shall contain sufficient stimulation generation capabilities to permit verification of the overall beacon, search and weather performance requirements as specified in 3.4.1.2.1, 3.4.1.2.2, 3.4.1.3 and their subparagraphs.

The simulator shall be built to best commercial standards in lieu of the requirements of FAA-G-2100/1 and related specifications. Specific exemptions to other requirements herein for the simulator may be granted to all bidders upon presentation of adequate justification.

3.7 Spare parts.- As established in the contract schedule, the contractor shall provide spare parts in accordance with the following subparagraphs.

3.7.1 Site spares.- The contractor shall supply as site spares a quantity of each circuit card assembly (whether wired-in or plugged-in), each plug-in assembly (such as a power regulator, analog-to-digital converter, test probe, display assembly, or similar unit) and each, PROM or other device which stores a computer program used in the CD-2 or its supporting equipment. The spare PROMs and similar devices shall be programmed and capable of immediate operation in the appropriate CD-2 equipment. For logistic support purposes, all PROMs containing different internal data sets (programs) shall be treated as separate and individual parts even if they are identified by the same vendor part number (e.g. 2708). Standard or common parts, including cathode ray tubes, LED display panels, keyboards and the like, are specifically excluded from the site spares package. For the purposes of this paragraph, these standard or common parts are limited to the assemblies and parts listed above which were not assembled or programmed specifically for the CD-2 or its supporting equipment, which were available from more than one manufacturer at the time of proposal submission, and which meet the "off-the-shelf" requirements of 3.6.1 herein.

The quantity of spares provided for each PROM, CCA, and plug-in assembly shall be 10 percent of the total quantity of that item used in the equipment delivered to a given site. When the calculation results in a mixed number, the quantity provided shall be the next larger integer; in no case, however, shall more than eight of any item be delivered to any one site.

These spares shall be delivered as required by the contract schedule.

3.7.2 Depot spares.- The contractor shall provide quantities of peculiar parts as depot-level spares as established in the contract schedule. The quantities provided shall be as required by paragraphs 3.3, 3.3.1, # and 3.3.2 of FAA-G-1375. Unique, replaceable items shall be provided # in quantities required by FAA-G-1375.

3.8 Computer programs.- The contractor shall deliver all operational, support, and test software programs required to meet the requirements of this specification. All deliverable programs shall be provided in a PROM or other format as required by the CD-2 equipment to provide the operational, maintenance, diagnosis, test, and analysis functions required herein. All programs shall also be delivered in the format required for use, modification, and long-term storage by the program development. set (3.6.3.3).

3.8.1 Operational programs.- The contractor shall provide a complete set of all of the programs that are required to enable the CD-2 operational equipment to accomplish the functions described in this specification. These operational programs shall include the actual programs required to perform the processing functions as well as the operational and diagnostic self-test functions required herein. Subprograms to operate with the operational program shall be provided as required to maintain continuous operation and confidence in the CD-2's performance. The operational programs shall be identical for all CD-2 configurations. All adaptation to unique site conditions and parameters shall be accomplished with changes to the initialization data as implemented by the internal means specified in the applicable paragraphs herein, or by the entry of data from the maintenance console, or both. Data entries from the maintenance console for site adaptation purposes shall not exceed 16 entries. The operational programs shall reside in the CD-2 equipment when it is delivered. In the event that microprocessors are used in the CCA test set; program development set or the input simulator, each of the programs which provide one or more of the required functional operations for these units shall be construed to be an operational program for the purposes of this paragraph unless the program is specifically identified as a support or a test program by paragraphs 3.8.2 or 3.8.3 herein.

3.8.2 Support programs.- The following programs, at a minimum, shall be provided to support the CD-2 equipment as specified elsewhere herein.

3.8.2.1 Utility system.- The contractor shall provide all of the utility programs required to give the necessary support. The following programs shall be delivered, as a minimum.

3.8.2.1.1 Assembler program.- A working assembler capable of running in the program development set shall be provided for each type of microprocessor used in the CD-2 and its supporting equipment. The assemblers shall be capable of producing machine code for all of the CD-2 processors from symbolic input, machine-oriented source statements. The object code shall be able to be either relocatable or absolute for any given translation. The translation shall convert one source statement to one machine-coded instruction or value word. Translator control source statements shall be included to handle decimal-to-binary conversion, decimal-tn-hexadecimal

(if used) conversion, acceptance of alphabetical data, storage allocation, input-output, and translation and control.

3.8.2.1.2 Additional programs necessary for program compilation.- All programs necessary to maintain, update or change the operational and maintenance-diagnostic programs shall be provided. Programs which allow compilation of symbolic source programs into the exact format required by the CD-2's microprocessors shall be included. High-level languages (such as COBOL, FORTRAN, PLM, etc.) may be used in developing and compiling CD-2 programs only upon receipt of written approval from the Contracting Officer.

3.8.2.1.3 Loaders.- Programs for loading operational, support and test programs into the development set shall be provided. These programs shall load object code produced by the assembler or data from storage medium or data from a PROM used in the CD-2 into the development set. The desired portion of the object program shall be able to be called from a library under program control.

3.8.2.1.4 Dumps.- Programs to transfer the completed program data to the storage medium or to a PROM in the final machine-code formats shall be provided.

3.8.2.1.5 Program debugging aids.- Program debugging aids which are resident in ROM in the program development set shall be provided. They shall include full and selective program tracing and breakpoint testing routines as a minimum.

3.8.2.2 Maintenance and diagnostic programs.- The contractor shall provide the maintenance and diagnostic programs required'for the self-test routines of the CCA test set and the program development set. They shall be resident in, and delivered with, these equipments.

3.8.3 Test programs.- The test programs and routines necessary to fully test all plug-in assemblies with the CCA test set shall be provided as required in 3.6.3.1. In addition to the format specified in 3.6.3.1, the programs shall also be provided in the format required by the program development set.

3.9 Reliability and maintainability.- The equipments specified herein shall comply with the reliability and maintainability requirements as specified in the following subparagraphs. The CD-2's reliability shall be such that, in conjunction with the achievement of the maintainability requirements, the CD-2 availability requirements are met.

3.9.1 Definitions applicable to reliability and maintainability.- The following terms, which are not included in the definitions of 1.2 herein, have specific meanings in the context of reliability and maintainability.

(a) Availability - An equipment's availability is the probability.., of specified operability at any instant in time over the service life of the equipment. Allowed preventive maintenance times shall not' be counted as unavailable periods, provided that the ability to reach an operable state within two scans or 10 seconds (whichever is greater) exists.

(b) Equipment Failures - Equipment failures are "black box", module, card, or part failures whose impact on the system's functions are not characterized by a loss of a capability in an online or off-line functions. For example, the failure of a power supply and the automatic assumption of its load by a redundant unit with no system outage is an equipment failure which requires maintenance action but does not affect the CD-2's performance.

(c) Functional Failures Functional failures are those which cause the partial or complete loss of a function OK capability.

(d) Nonrelevant Failure Nonrelevant failures are those failures caused by one of the following:

(1) Failures that result from factors external to the equipment under test (e.g. a failure in commercial power).

(2) Failures that result from errors of operating or maintenance personnel.

(3) Manufacturing or wiring errors that are identifiable and fully correctable may be classified as nonrelevant in the factory testing at the discretion of the Government monitor.

(e) Relevant Failure - Any failure that does not fall into one of the categories listed under (d) above shall be recorded as a relevant failure. Specifically included are failures due to parts defects, degradation due to out-of-tolerance conditions, transients, and unknowns.

3.9.2 Reliability and maintainability requirements.- The operational CD-2 equipment shall meet or exceed the following reliability and maintainability requirements:

(a)	MTBF	3,000 hours
(b)	MTTR	0.5 employee-hours

The specified MTBF (as defined in MIL-STD-781) shall apply to the on-line CD-Z consisting of one BTE, one STE, one CIM (including the daisy-chain of 3.4.3.1.3.1), the MIG, the system control and status display functions of the maintenance console, and all necessary interconnecting cabling and wiring. -Automatic channel changes are permitted, but no repair or other maintenance action shall be permitted. The MTTR shall be the interval of time beginning with the start of diagnostic procedures by maintenance personnel and ending with the restoration, checking, and certification of the correct operation of the failed module or channel. Logistic delays, such as waiting for parts, shall not count in the determination of MTTR. The full CD-2, with its standby channel, shall have an availability of 0.9997 or better when operated in the automatic channel change mode (3.4.1.6). This requirement shall be interpreted as a restriction on any corrective or preventive maintenance time which necessitates a loss of valid data from the CD-2. The contractor's reliability and maintainability programs shall serve to identify problems which could limit the availability of the CD-2 system. The contractor shall accomplish

all changes in equipment design and implementation that are necessary to satisfy these requirements. All such changes shall be promptly reported and their resulting effects on the deliverable reliability and maintainability predictions and data shall be fully described.

The MTBF and MTTR requirements shall also apply separately to each deliverable piece of maintenance and test equipment (3.6) and to the combined off-line functions of the maintenance console. The CD-Z and its supporting equipment shall have a maximum bench repair time of 8.0 employee-hours (at the 95th percentile) for all repairs, whether performed at the CD-2 site or at a depot-level repair facility. The mean bench repair time for these equipments under the same circumstances shall be 3.0 employee-hours or less.

3.9.2.1 Maintenance approach.- Ease and speed of repairs is required so that the maximum availability of the CD-Z can be achieved. Immediate indication of the need for maintenance/is essential to provide the optimum performance from the equipment.

Accordingly, the CD-Z shall be designed so that the off-line channel and the off-line functions of the maintenance console can be completely maintained with no interruption to the correct processing and transmission of data by the on-line equipment, within the limits established by the availability requirement. The maximum effort allowed for corrective and preventive maintenance or the operational CD-2 equipment shall not exceed 2.0 employee-hours per week. In addition, the maximum corrective and preventive maintenance on the supporting equipment shall not exceed 1.0 employee-hours per week. These times shall include preparation and active working time but, shall not include bench repair time. The CD-2 operating equipment shall be designed such that if a failure in the on-line channel occurs while a technician is performing any routine preventive maintenance task on the otherwise operable standby channel, the full and valid data output can be reestablished within three minutes.

All electronic and mechanical parts and equipment shall be designed and fabricated to minimize the time, skill and experience necessary to repair and maintain them. The corrective maintenance approach shall, to the maximum extent possible, be to localize the failures through the use of software and hardware maintenance features, and to remove and replace the failed element, CCA or plug-in assembly using site spares stocks. The actual repair of the failed unit shall be accomplished in a designated bench repair area using the appropriate maintenance equipment (3.6).

The hardware design shall, to the greatest extent possible, present a software interface that allows application of computer program diagnostic techniques. Diagnostic software (self-test) and maintenance features shall be designed to rapidly isolate malfunctions to the replaceable-unit level.

3.9.3 Reliability program.- The contractor's reliability program shall insure that the reliability requirements of 3.9.2 are met or exceeded. It shall be conducted in accordance with the requirements in the following subparagraphs.

3.9.3.1 Reliability program plan.- The contractor shall prepare a reliability plan which fully describes its plans to conduct a reliability program which meets the requirements herein. The plan shall contain the information required by paragraphs 5.1.1, 5.1.2.1, 5.1.3, 5.2.2, and 5.5.1 of MIL-STD-785. The plan shall be submitted as specified in 3.12.2.1.1 herein. #

3.9.3.2 Reliability program management.- The contractor's reliability management organization and control shall be in accordance with paragraph 5.1 and its subparagraphs of MIL-STD-785, supplemented as follows:

(a) Organization - The head of the reliability management organization shall have the necessary authority, resources and access to higher management to enable him or her to implement and enforce the action required to meet the requirements specified herein.

(b) Subcontractor and supplier control - To the extent necessary to satisfy the requirements herein, all subcontractors and suppliers shall be bound by the prime contractor to these same reliability program requirements. All proposed deviations shall be presented to, and approved by, the FAA program office before such products or processes are incorporated into production equipment. Formal design reviews shall be conducted by the prime contractor with subcontractors and suppliers. Provisions shall be made for participation by FAA personnel as required in the contract schedule.

3.9.3.3 Reliability program tasks.- The contractor's reliability program shall, as a minimum, Include the tasks specified in the following subparagraphs.

3.9.3.3.1 Design techniques.- Using the techniques of paragraph 5.2.1 of MIL-STD-785, the CD-2 and its supporting equipment shall be designed such that each part and component is operated well within its design ratings. The parts shall not be subjected to conditions during operation, transit, or storage which exceed the values obtained when the device's maximum ratings have been reduced (derated) as required by this subparagraph or 3.5.2.13, whichever is more restrictive. No part shall operate at more than 50 percent of its voltage-temperature and power dissipation-temperature stress ratings. The operating temperature for temperature-constrained parts shall be at least 10°C below the device's maximum operating temperature. The operating temperatures used for these ratings shall be +50°C plus the appropriate internal temperature rise when the devices are operated. in the equipment with its doors closed, or +30°C plus the internal temperature rise with the doors open and parts extended for accessibility, whichever is greater.

Parts shall be selected as specified in 3.5 herein,. using paragraph 5.2.3 of MIL-STD-785 as a guide in obtaining parts which meet the applicable reliability requirements herein.

3.9.3.3.2 Thermal design analysis.- The contractor shall analyze the thermal design of all CD-2 equipments. The analyses shall provide the necessary means to assure that the design and all parts, components,

and materials meet the requirements of 3.3.2.1, 3.5.2.4, and 3.9.3.3.1 herein.

An analysis of each power supply shall be accomplished. They shall consider all electronic parts and current carrying hardware (lugs, bolts, cables, etc.), including insulating and other materials used with or within one inch (2.54 cm) of these components. Each circuit card assembly and plug-in module shall be diagnosed to determine typical power dissipation per assembly and major current carriers and dissipators on the assembly. For digital logic cards, and similar assemblies, estimated power dissipation per board shall be provided.

The analysis shall estimate temperature rise of cooling air passing through each power supply, each module and through the entire CD-2. Where it is determined that local areas of elevated temperatures exist, these areas shall be investigated and any design changes necessary to bring the conditions within these requirements shall be implemented. The results of these analyses shall be provided as specified in 3.12.2.1.2.

3.9.3.3.3 Reliability analysis.- The contractor'shall'analyze the overall reliability'of the CD-2 and its supporting equipment. The analysis shall be conducted as required by paragraphs 5.2.2, 5.2.2.1, 5.2.2.2, 5.2.2.4, and 5.2.2.5 of MIL-STD-785. The CD-2's reliability requirements (3.9.2) shall be apportioned to lower levels within the system by allocating reliability goals to each module, equipment, assembly, and subassembly which is designed by the contractor or purchase as an entity from a subcontractor or supplier. The allocation shall be based on the system reliability model, the system reliability performance and test requirements, and on cost, schedule, and state of the art. The initial allocations shall be refined as the design progresses.

3.9.3.3.4 Reliability predictions.- A reliability prediction shall be made for each applicable mode of operation (3.4.1.6) of the operational CD-2 equipment. In addition, predictions of the overall reliability of each piece of supporting maintenance equipment and the off-line functions of the maintenance console shall be made. The predictions shall be provided as specified in 3.12.2.1.2. Each prediction shall be based on the proposed design and the reliability model of the system elements, and shall meet the requirements of MIL-STD-756 for a Type II prediction. The Rome Air Development Center's (RADC) Technical Report, TR-75-22, RADC non-electronic reliability notebook, section 2, shall be used as the source. for failure rates of nonelectronic parts. Other failure rate data which is not in accordance with these requirements may be used; however, each such use shall be individually justified by the contractor and shall be permitted only upon Governmental approval. In all cases, the failure rates utilized shall reflect the measured or calculated stresses on the components in their environment within the CD-2 equipment (3.9.3.3.1). For reliability prediction purposes, the contractor shall assume the MTBF of the Government-furnished ADC (3.13) to be 100,000 hours.

3.9.3.3.5 Total logistic predictions.- The contractor shall make a total logistic failure rate prediction for each of the conditions requiring

a reliability prediction (3.9.3.3.4). The logistic prediction shall be similar to the reliability prediction, but it shall include all failures, not just those which can cause outages. The logistic prediction shall reflect failure rates of all equipments and hardware in the CD-Z system. It will be used to produce a measure of the maintenance and logistic workload necessary to maintain the CD-2 in its optimum operational state. it shall be prepared as specified in 3.12.2.1.2.

3.9.3.3.6 Failure modes, effects, and criticalness analysis.- The contractor shall incorporate a failure modes, effects, and criticalness analysis into the design process at its inception and continually update the analysis as the design evolves. The analysis shall include all functional requirements of the CD-2 and its supporting equipment down to the level of repair contemplated for normal on-site maintenance of the equipment. The applicable modes of failure for each replaceable element shall be injected into the analysis to ascertain critical areas based on the functions performed and the expected failure rates. The results of the analysis shall be used by the contractor to evaluate the reliability model, detect critical areas and, if necessary, determine appropriate design changes. Items which are critical to the reliable operation of the CD-2 shall be identified and handled as required by paragraph 5.2.5 of MIL-STD-785. The items in the CIM daisy-chain (3.4.3.1.2.1) and those which implement the system control and status display functions of the maintenance console shall be included as critical items because of their essential role in the operation and control of both channels of the CD-2. Particular attention shall be paid to redundant applications to insure that the redundancy is not invalidated by obscure circuit effects or sneak paths. The contractor's reliability engineers shall work with the hardware and software design engineers on a continuing basis to accomplish at least the following:

(a) Identification of system, subsystem, and component failure modes

(b) Identification of probable causes of failure

(c) Identification of failure symptoms

(d) Identification of the effects of failures on the system operation and functions

(e) Determination of failure mode rates

(f) Recommendation of appropriate corrective features such as redundant elements, failsafe or failsoft designs, and selection of more reliable parts

(g) Assistance in the formulation of test criteria to be used, in light of the identified critical failure modes

The results of the analysis shall be provided as specified in 3.12.2.1.2.

3.9.3.3.7 Effects of storage and handling.- The effects on reliability of storage (including shelf life), packaging, transportation, handling, and maintenance actions shall be assessed and incorporated into the reliability program in accordance with paragraph 5.2.6 of MIL-STD-785.

3.9.3.3.8 Design reviews.- The contractor shall be prepared to explain and fully discuss its reliability program at the CD-2 design reviews as established by the contract schedule. The reliability portion of the design reviews shall include, as a minimum, information of the type required by paragraph 5.2.7 of MIL-STD-785.

3.9.3.3.9 Failure reporting, analysis, and correction.- The contractor shall establish a closed-loop procedure for the reporting and correction of failures in CD-2 equipment both in the factory and at the site. The reporting shall be accomplished in accordance with paragraph 5.4.1 of MIL-STD-785, except where deviations are fully justified in the reliability program plan and approved by the Government before the beginning of equipment production. As a minimum, all failures occurring after the time that the individual equipment's design is frozen and before the final acceptance of each CD-2 and each piece of supporting equipment shall be reported and corrected. The contractor shall statistically analyze each reported failure and ascertain its cause or causes. Each analysis shall also include the identification of any reliability problems and an assessment of the individual and overall reliability trends. Failure data reports to the component level that include the results of individual and trend analyses shall be maintained in a centralized file to which the Government has unlimited access. Summaries of failures shall be prepared and shall include the identification of each failure, the results of each failure analysis, the equipment failure mode and symptoms, the cause of the failure and any corrective action taken, planned or recommended. The status of the corrective action and a statement as to the failure's relevance to any test (maintainability, reliability or similar tests), as well as a description of any discernible trends or patterns shall also be included. The failure summaries shall be included in the final test reports (3.12.1.5).

The prime contractor shall also establish a similar procedure for reporting of all failures in all deliverable subcontractor items which equal or exceed the complexity of a typical plug-in assembly. This reporting procedure shall commence with the first application of power to the unit. All failure reports of subcontractor items shall be traceable to the CD-2 equipment in which the item is to be used.

3.9.3.3.10 Reliability status.- The contractor shall prepare and submit reliability status reports in accordance with paragraph 5.6 of MIL-STD-785 and 3.12.2.1.2 herein.

3.9.4 Maintainability program.- The contractor's maintainability program shall insure that the maintainability and, in conjunction with the reliability program, the availability requirements of 3.9.2 and 3.9.2.1 are met or exceeded. It shall be conducted in accordance with the requirements of the following subparagraphs.

3.9.4.1 Maintainability program plan.- The contractor shall prepare a maintainability program plan which fully describes its plans to conduct a maintainability program which meets the requirements herein. The plan

shall conform to the requirements of paragraph 5.1 of MIL-STD-470 except where limited herein. The plan shall also address the following topics:

(a) Cost tradeoffs and reliability considerations involved in the application of both corrective and preventive maintenance.

(b) Number and skill levels of personnel required to maintain the CD-2.

(c) Level of diagnostic support.

(d) CCA problem analysis and field repair techniques.

(e) Special test equipment for bench repair items.

(f) Repair verification techniques.

The plan shall be submitted as specified in 3.12.2.1.3.

3.9.4.2 Maintainability program management.- The contractor shall have a clearly identified, organizational element which is responsible for planning, implementing, controlling, and reporting all maintainability tasks required herein. The head of the maintainability management organization shall have the necessary authority, resources and access to higher management to enable him or her to implement and enforce the action necessary to meet these requirements, To the extent necessary, all subcontractors and suppliers shall be bound by the prime contractor to these same maintainability program requirements. All proposed deviations shall be presented to, and approved by, the FAA program office before such products or processes are incorporated into production equipment. Formal &sign reviews shall be conducted by the prime contractor with subcontractors and suppliers. Provisions shall be made for participation by FAA personnel as required by the contract schedule.

3.9.4.3 Maintainability program tasks.- The contractor's maintainability program shall, as a minimum, include the tasks specified in the following subparagraphs.

3.9.4.3.1 Maintainability analysis.- The contractor shall analyze the maintainability of the CD-2 and its supporting equipment in accordance with paragraph 5.2 of MIL-STD-470. The analysis shall be consistent with the reliability and maintainability requirements herein and the concepts described in the maintainability program plan.

3.9.4.3.2 Maintenance concept plan.- The contractor shall prepare a detailed maintenance concept plan in accordance with paragraph 5.3 of MIL-STD-470. The plan shall be periodically updated as the design proceeds and shall reflect the maintainability design criteria, trade-offs, and predictions. The plan shall be submitted as required in 3.12.2.1.4. The maintainability considerations provided for the Government-furnished ADC unit shall be limited to providing access to it, including cover removal without disrupting operation, in accordance with the accessibility requirements herein.

3.9.4.3.3 Maintainability design criteria.- The contractor shall establish, apply, and update as necessary maintainability design criteria in accordance with paragraph 5.4 of MIL-STD-470 as supplemented herein. Components requiring little or no preventive maintenance shall be utilized where possible. Each operational and diagnostic self-test shall be designed to have a failure rate equal to or less than ten percent of that of the equipment or module being monitored. The self-test functions shall be at least 95 percent effective in detecting and identifying functional failures in their respective modules and functional loops within those modules. The fault isolation function of each self-test function shall be at least 95 percent effective in isolating a single detected fault within its functional loop to two or fewer CCAs, plug-in assemblies, or wired-in, active assemblies. The false indication rate of each self-test function shall be equal to or less than five percent. The disabling of an otherwise operational CD-2 shall not be possible as the result of a failure in, or false indication from, a single self-test function.

3.9.4.3.4 Maintainability design tradeoffs.- During the design and development of the CD-2, the contractor shall include maintainability considerations in all design tradeoffs in accordance with paragraph 5.5 of MIL-STD-470. In addition, the following tradeoffs shall be included:

(a) Self--test effectiveness versus acquisition costs

(b) Self-test effectiveness versus logistic support costs

(c) Implementation of plug-in and replaceable assemblies versus improvement in MTTR

(d) Repairing versus discarding of CCAs and other plug-in assemblies

(e) System design to facilitate troubleshooting by signature analysis techniques versus traditional design and maintenance techniques

The results and detailed computations of the tradeoff studies shall be provided as specified in 3.12.2.1.5..

3.9.4.3.5 Maintainability predictions.- The contractor shall make maintainability predictions and establish the appropriate preventive maintenance requirements in accordance with paragraph 5.6 of MIL-STD-470. Preliminary predictions of mean corrective and preventive maintenance times shall be provided as specified in 3.12.2.1.3. These predictions shall be updated and refined during the design and development stages. An early design prediction shall be prepared in accordance with Procedure III of MIL-HDBK-472 and a final design prediction shall be prepared in accordance with Procedure II, Part B of the same handbook. The procedures, accomplishment times, and schedules of each of the recommended or established preventive maintenance tasks shall be included in the early and final design predictions. The early and final design predictions shall be provided as specified in 3.12.2.1.5.

3.9.4.3.6 Design reviews.- The contractor shall be prepared to explain and fully discuss its maintainability program at the CD-2 design reviews as established by the contract schedule. The maintainability portion of the design reviews shall include, at a minimum, information of the type required by paragraph 5.9 of MIL-STD-470, and the following:

(a> Current maintainability estimates and achievements as derived from predictions or tests

(b) Status and description of the maintainability program plan

(c) Results of the design tradeoff studies

(d) Effects of engineering and management decisions and changes upon maintainability achievements, trends, and potentials

(e) Status of subcontractor and supplier maintainability programs

(f) Functioning of maintainability data collection systems

(g) Review of problems and any unresolved issues

3.9.4.3.7 Maintainability data collection.- The contractor shall establish a data collection procedure for validating maintainability predictions and evaluating maintainability demonstrations. The procedure shall be established in accordance with the requirements of paragraph 5.10 of MIL-STD-470, with the phrase "CD-2 preliminary design review" being substituted for "contract definition" in two places.

3.9.4.3.8 Maintainability status.- The contractor shall prepare and submit maintainability status reports in accordance with paragraph 5.12 of MIL-STD-470 and 3.12.2.1.5 herein.

3.9.5 Reliability and maintainability testing.- The satisfaction of the reliability and maintainability requirements (3.9.2) shall be demonstrated by the appropriate tests as specified in 4.3.3, The test documentation shall be provided as specified in 3.12.1.3.1, 3.12.1.3.2 and 3.12.1.5.

3.10 Installation and checkout.- The contractor shall install, debug, and test the CD-2 equipment at the designated receiving site as established in the contract schedule. The installation and checkout shall be accomplished in accordance with the approved site installation documents (3.12.1.7). Because the installation will, in most cases, be in commissioned Government radar facilities, adjustment to the contractor's normal working hours may be required to prevent conflict with site operations.

3.10.1 Installation cables and materials.- The contractor shall provide and, where required by the contract schedule, install all materials and interconnecting cables necessary for the installation of the complete CD-2 equipment. Included are the CD-2 junction box (3.5.2.10); cabling from the CD-2 to the junction box and, in the case of the MIG message console cables, through the junction box to the message console shelves; and the ac power wiring from the equipment to the power distribution point in the equipment area. All power wiring and materials shall be in accordance with the National Electrical Code, NFPA No. 70. In no instance shall the junction box or the power distribution point be located more than 75 feet (22.9 m) from the CD-2 equipment cabinet, nor shall the MIG message consoles be located more than 1,000 feet (305 m) from the CD-2 equipment cabinet, both distances being measured along cabling routes. The contractor shall provide all cables, cable connectors, terminal boards, adapters, and the like which are required for installation and site testing of the equipment. Any special purpose test cables, probes, extenders, clamps, or adapters required for routine preventive or corrective maintenance shall be provided. All cables shall be provided to the Government with connectors installed, unless proper installation of the cable requires one or both ends to be bare. In such instances, appropriate tools (3.5.2.9) and connector materials shall be provided to each site requiring installation of a connector. Installation spares in the amount of at least ten percent, but not less than three (or equivalent quantity) of each part subject to incorrect installation or damage during installation (such as crimped lugs, ferrules, and heat shrink tubing) shall be provided.

3.10.2 Installation and checkout tasks.- The following tasks shall be provided by the contractor at those sites where contractor installation is required by the contract schedule:

(a) Off-loading and positioning of all equipment in the locations designated in the appropriate site installation document.

(b) Interconnecting all CD-2 equipment cabinets.

(c) Installing the CD-Z junction box and relocating the existing landline data circuit protection equipment. (This task will be accomplished by FAA personnel before arrival of the CD-2 equipment, if so established in the contract schedule.)

(d) Installing the cabling from the CD-Z to the junction box and, for the message consoles only, through to the USAF operations area and connecting it to the CD-2 message consoles.

(e) Installing the power wiring to the CD-2 power panel (FAA personnel will make the actual connection to the power source).

(f) Initial power application and equipment debugging.

(g) Approximate adaptation to site parameters.

(h) Operational demonstration test (4.3.7).

3.10.3 Integration into the NAS.- When required by the contract schedule, the contractor shall be responsible for the integration of the operational CD-2 equipment into the National Airspace System (NAS) as specified herein. The contractor shall supply all services and materials to verify proper operation of the CD-2 and its interfaces. The contra-tor, with the participation and assistance of the designated FAA representatives, shall align and adjust the CD-2 for its optimum performance according to the equipment and operating parameters and requirements of each operational facility. The contractor shall not be required to extract more performance from the CD-2 than is consistent with the as-found conditions and performance capabilities of the equipment with which it is interfaced. Computer diagnosis of the CD-2 data will be provided as appropriate by the using ARTCC. The contractor shall participate in meetings and conferences and provide technical data fully describing the CD-2's performance and design compatibility with the assockared equipment as may be directed by the Contracting Officer. The contractor shall prepare a CD-2 integration procedures manual (3.12.1.10) which fully describes the adjustments and procedures required for integration of the CD-2 into the NAS.

3.11 Not used.

3.12 Documentation.- The contractor shall provide all necessary services and materials to develop and deliver such documentation as is specified herein, in the forms and quantities and at the times that are required by the contract schedule. All documentation specified herein shall be periodically updated during the entire life of the contract to reflect the latest design, plans, test results and similar data. In the event that the documentation requiring change has been formally submitted to and accepted by the Contracting Officer, the appropriate revision shall be provided in the same quality and quantity as the earlier submission. The revision shall be in the form of replacement or change pages or, if more than 50 percent of the document requires reprinting to provide the change pages, the total document shall be reprinted and submitted with the appropriate revision notation and the dates of both the original and the revised submission.

All documentation produced, updated or delivered by the contractor shall conspicuously show the contractor and contract number. The identification shall be on the front page of each bound document and on each page of loose-leaf and single-sheet documents such as drawings.

All reproducibles furnished shall be of such quality as to permit at least two generations of legible copies to be made by the intended reproduction process. The copies shall be legible in every character in every part of the page. Reproducibles of the sepia type shall have a minimum background or field intensity with no burned or unintended dark or shaded areas.

All documents shall be prepared using correct English and a minimum of abbreviations and acronyms. Correct spelling (e.g. "through" instead of "thru") and punctuation shall be used in clear: direct sentences. Effective and unambiguous communication of the intended information shall be the goal of each document.

3.12.1 System documentation.- The following subparagraphs specify the general documentation requirements for the overall CD-2 system and its acquisition processes. Such additional information as may be requested by the Government in accordance with paragraphs l-4.6 and l-4.7 of FAA-G-2100/1 shall also be provided.

3.12.1.1 Management reports.- The contractor shall submit management reports, as defined in the following subparagraphs, to the Contracting Officer.

3.12.1.1.1 Management reports during design and development.- Management reports during design, development, and fabrication of the first production article CD-2 system shall consist of three major parts.

(a) Part I, program status - Part I shall include a narrative of work progress during the reporting period and the status of the design, fabrication, and test of each CD-2 subsystem and modules. Also included shall be the status of the documentation, testing, instruction books, and training efforts. An index of technical memoranda and drawings shall be provided and updated with the management reports.

(b) Part II, schedule - Part II shall include an updated Program Evaluation Review Technique (PERT) diagram or current information relative to a computerized PERT network if a PERT computer program is used. The PERT diagram shall be supplemented by milestone charts where necessary. FAA-STD-007 shall be observed for preparation of PERT diagrams. The contractor's usual internal management analysis technique may be used in lieu of PERT upon petition, to and approval by, the Contracting Officer, provided that the required information is clearly presented.

(c) Part III, problem areas - Part III shall include the discussion and solution, or progress toward solution, of any special problem areas.

The initial management report shall also include the information required below. This will become the master program plan and-schedule. Changes and updates to this information shall be furnished in succeeding reports.

(a) Program plan -The contractor shall submit an overall plan designed to encompass every aspect in the planning, design documentation, fabrication, quality control, production, factory tests, delivery, installation, provisioning, and warranty and repair services.

(b) Program schedule and control procedures - The contractor shall provide a detailed work breakdown scheme and program performance schedule, along with a supporting narrative which relates the work breakdown to the schedule. All deliverable items, activities requiring Government action, and significant events that must be accomplished shall be included& As a minimum, the following elements shall be provided:

(1) Program schedule in bar chart or milestone format, divided into three phases: equipment design, presubmission test and evaluation, and production. All subcontractor efforts shall be included in the schedule,.

(2) PERT chart or equivalent, identifying and analyzing the critical path, critical components and lead times.

(3) Subcontractor schedules and a listing of the, components they will supply, including critical items, lead rimes and methods of management control of the subcontractors..

(4) Detailed explanation of the control procedures to be exercised to assure expeditous completion of all activity related to the program, including timely updating of the performance schedule. The report shall include the 'required personnel resources, by numbers and types of skills required, for each phase identified in the program schedule in (1) above.

3.12.1.1.2 Management report's during production.- Management reports during production shall consist of three parts:

(a) Part I, 'program status - Part I shall include a narrative of work progress during the reporting period in the areas of installation, testing, spares support, training, maintenance, and instruction books.

(b) Part II, schedule - Part IT shall include the schedules and milestone charts of the support functions. The status schedules for production shall be shown on an appropriate milestone chart.

(c) Part III, problem areas - Part III shall include the discussion -and solution, or progress toward a solution, of special problems in the support and production 'functions, and any other problem area.

3.12.1.2 System design data.- System design data shall be submitted for Government review in accordance with the contract schedule. The submission shall be organized to reflect the contractor's approach to the total system design and shall be organized in a logical sequence to reflect the hardware and software design approach. All pages shall be sequentially numbered. The submission of design data shall not be used to produce modifications or alternatives to details of this specification or a change in the scope of the contract. The design data shall include all elements of the equipment to be supplied by the contractor under the terms of the contract, as detailed by this specification and any addenda hereto, together with all interfaces with other equipment. , A summary of equipment operational characteristics shall be included. Acceptance of the design data does not relieve the contractor of any responsibility to meet a requirement in this specification. Rather, it requires the design data to reflect the intended and actual design of the equipment.

3.12.1.2.1 System description.- The design data shall include a description of the overall system and each module, detailing their interaction and the diagnostic and operational capabilities necessary to meet all functional requirements.

3.12.1.2.2 Block diagram.- A complete set of equipment block diagrams shall be provided by the contractor. The block diagrams shall show the general operational, electrical, and physical relationships of the equipment elements.

3.12.1.2.3 Information logic flow diagrams.- The contractor shall provide complete equipment information logic flow diagrams. These diagrams shall show the detailed logical, operational, and functional relationships of the equipment elements. Symbology used in these diagrams shall be fully explained in the basic document. The functions- of the self-test features shall also be described.

3.12.1.2.4 Input-output details.- The contractor shall provide data which consolidates all equipment interfaces and input-output characteristics. This shall include: transmitted data characteristics, external interface signal characteristics and limits, timing diagrams, proposed message structures and formats, and power requirements. This data shall include all major intra-system as well as external interfaces. All human-machine interfaces, such as front panel control layouts, system data bus message formats, display and printer formats and all similar functions, shall be provided. The proposed points of connection at the external equipment shall be included for each of the equipments listed in Table I.

3.12.1.2.5 Conceptual implementation of MTD, AMPS and DABS.- The design data shall contain a description of the contractor's concepts as to possible implementations of the MTD, AMPS and DABS programs at an operational, commissioned CD-2 facility. A complete description of the physical, electrical and functional provisions within the CD-2 to accommodate these future programs shall be provided. The process of modifying and repro:-' gramming the CD-2 to function with these equipments shall be described to the best of the contractor's ability, given the current state of the design of these future equipments.

3.12.1.2.6 Computer programs.- A complete description of the program organization and design, including subprogram description, external data formats and internal data formats, shall be furnished as part of the system design data. The document shall provide overall information about the total computer program. The design description shall indicate the partitioning of the functional requirements into logically related subsets which are identified with specific subprograms. For each subprogram, a discussion of performance requirements including estimates of program timing and data storage shall be provided.

3.12.1.2.7 Mechanical and electrical data.- The design data shall include sufficient drawings and text to provide a complete description of major and critical dimensions, routing of cables, mechanical assemblies and other major features such as cable entry and exit, and the layout of all control and maintenance panels. Power, ventilation, heat dissipation, and external access space requirements shall also be provided.

3.2.1.2.8 Reliability and maintainability data.- The current predictions for reliability and maintainability shall be provided along with a trend assessment of the design to this point. A thorough discussion of the maintenance concept and the types of corrective and preventive maintenance activities and schedules envisioned shall be included. The use of the self-test to troubleshoot equipment failures shall be thoroughly described.

3.12.1.2.9 Deleted.

3.12.1.3 Qualification and acceptance tests plan .- The contractor shall submit a single test plan which outlines the complete testing program required to demonstrate compliance of the CD-2 equipment with the requirements of this specification. The plan shall provide an overview of all proposed test activities for all equipment and computer programs for the first unit of each equipment as well as for all production units. For each test activity, the plan shall provide specific and detailed test objectives and a thorough discussion of the methods and techniques which are to be used to verify compliance with the requirements herein. Autanatic test equipment and procedures may be used provided that all of the requirements herein are met. The planned start and completion dates, the types and number of units and equipments involved and a listing of all applicable test documentation shall also be provided for each specific test activity. The test plan shall provide for five separate #

and distinct test classifications as defined in paragraph 1-4.3 and related subparagraphs of FAA-G-2100/1, and as limited and supplemented in section four of this specification.

(a) Contractor's preliminary tests -

(b) Design qualification tests -

(1) General characteristics tests -

(2) Performance tests - The performance tests shall demonstrate that the equipment fully satisfies the detailed performance requirements specified in paragraphs 3.2, 3.4, 3.6, 3.8, and all related subparagraphs herein.

(3) Reliability test and demonstration -

(4) Maintainability test -

(c) Type tests - The equipment shall be tested to insure its operation over the service conditions (3.3.2).

(d) Production tests - The production or factory acceptance tests shall be conducted at a module and system level. It shall verify that the major requirements of the performance test are being consistently met.

(e) On-site tests - The on-site or "final sell-off" tests shall be similar to the production tests except that the reliability tests shall not be repeated. In addition, the test shall demonstrate the correct operation of the CD-2 with its associated radar and data communication equipment. The on-site tests and, hence, the portion of the overview test plan which describes them, shall be provided only if specifically required by the contract schedule.

The Government will review and approve the reliability, maintainability, and overview test plans as established in the contract schedule. Once approved, the plans shall be used by the contractor as the basis for developing the detailed equipment and computer program test procedures and data sheets (3.12.1.4).

3.12.1.3.1 Reliability test plan.- An integrated reliability test and demonstration plan shall be prepared in accordance with paragraphs 5.3.1 and 5.3.3 of MIL-STD-785 and the requirements of the reliability program plan as provided by paragraph 3.12.2.1.1 herein. The plan shall provide specific and detailed test objectives and a thorough discussion of the techniques and methods which are to be used to meet these objectives and the testing requirements of 4.3.3.3 and 4.3.4.2 herein.

3.12.1.3.2 Maintainability test plan.- The contractor shall prepare a maintainability demonstration test plan in accordance with varanraph 5.11 of MIL-STD-470, paragraph 4.2 of-MIL-STD-471, and the requirements herein. The plan shall provide specific test objectives and a thorough discussion of the methods to be used to meet these objectives and the testing requirements of 4.3.3.4 herein. The plan shall include the following information, at a minimum:

(a) The equipment being tested shall be described. The associated support equipment and other interfacing equipment which is to be excluded from the test shall *be specifically identified.

(b) The levels of maintenance to be demonstrated shall be defined.

(c) The maintenance concept and repair policies applicable to each item of the equipment to be tested shall be stated.

(d) The test method and the applicable accept-reject criteria for the test item shall be defined. The applicable maintainability requirements of 3.9.2 shall be explicitly stated.

(e) The personnel training and skill levels, and the number and ratings of the FAA and contractor personnel comprising the test team shall be-prescribed.

(f) The mode of operation for the test, such as equipment configuration, operational requirements and duty cycles, shall be specified.

3.12.1.4 Equipment and computer program test procedures.- The contractor shall prepare comprehensive test procedures which include all details necessary to assure that the test procedures and testing thereto will satisfactorily demonstrate equipment and system compliance with all functional, environmental, electrical, mechanical, reliability, maintainability, throughput; and response time requirements as contained in this specification. Each test of the test procedure shall reference the specific requirements of this specification and the appropriate test plan which are to be verified by the tests described. The test criteria, demonstration test procedures, test methods, data collection procedures and reporting requirements for the reliability and maintainability tests shall be in accordance with their respective program plans. The test procedures and data sheets shall comply with the requirements of paragraph 3.2 and associated' subparagraphs of FAA-STD-016. Once approved by the Government, these procedures shall be utilized to conduct all testing required in 4.1 her&n, except for the integration tests which have a separate test procedures document (3.12.1.10).

3.12.1.5 Final test reports.- Upon completion of each test defined by the approved test plans and procedures, the test results shall be recorded and submitted to the FAA. The test report shall contain a complete description of the test results. The test report shall contain the data required by the applicable test plan as well as the information specified below.

(a) Copies of the test data sheets.

(b) A description of the performance of each equipment under test and whether it meets the system limits.

(c) Functions that were tested.

(d) Information as to whether the results of the test are in agreement with the required maintainability and reliability of the unit or system.

(e) A record of any engineering changes found necessary to correct design deficiencies.

(f) Copies of all discrepancies noted during the test along with the dispositions accepted and approved by the Government.

(g) Copy of all deviations from the approved test procedures required during the testing.

(h) Copies of all failure reports on components in the equipment under test.

3.12.1.6 Site preparation reports.- The contractor shall submit a site preparation report for each site receiving CD-2 equipment.' Where the requirements of the installations are identical, a single report may apply to multiple sites. The site preparation report will be used by the Government to prepare the site for installation of the contractor's equipment and to perform necessary services not required of the contractor. Therefore, all requirements to prepare the site for installation of the equipment shall be included. The report shall include but not be limited to the following:

(a) Typical floor plan layouts of CD-2 operational and maintenance equipment and spares.

(b) List of the CD-2 equipment and tools to be delivered to site by the contractor.

(c) Tabulation of, the mechanical and electrical characteristics of each piece of equipment. Included shall be the definition of power requirements, circuit,breaker panels, heat load in BTU per hour, starting surge current data, circuit breaker requirements, and power factors. The overall dimensions and weights (crated and uncrated) and any other information needed for the Government to prepare for the equipment installation shall be provided.

(d) Definition of cable and connector requirements for the complete installation, including typical cable access points and routing.

(e) Definition of any office equipment and space required by the contractor during the installation and checkout period.

(f) Identification of requirements for Government and other contractor's services and test equipment, if any.

(g) List of temporary test equipment, if any, which will be supplied by the contractor.

(h) A tabulation of typical or estimated work schedules, requirements and plans.

3.12.1.7 Installation documents.- The contractor shall submit installation documents for each site to the Contracting Officer for approval. (In this context, "each site" means each delivery location receiving a different CD-2 or piece of supporting equipment: CD-2A, CD-2B, CD-2C, CD-2D, program development set and input simulator.) The documents shall contain all necessary information required by trained technicians and engineers to correctly install the equipment and initiate its operation. Included shall be step-by-step procedures for off-loading, upacking, and placing the CD-2 and its supporting equipment. Detailed and understandable checkout procedures of a depth similar to those which would be used by contractor personnel if installation is required by the contract shall be provided. In summary, all activity relating to the installation effort, starting with the arrival of the first piece of equipment, material or personnel to the presentation of the equipment for integration testing shall be fully described. Paragraph 1-3.16 and related subparagraphs of FAA-D-2494/1 shall be used as a guide to the type of information required.

3.12.1.8 As-built installation drawings.- Site installation drawings covering all equipment installed and in place for each CD-2 system shall be provided for each site at which contractor installation is required by the contract schedule. The drawings shall include power distribution cabling, signal and control cables, lightning surge protection system, ground systems, floor plans, and equipment identification as a minimum. The drawings shall be prepared in accordance with FAA-STD-002.

3.12.1.9 Interface control documents.- The contractor shall submit for Government approval interface control documents for each external interface including equipment and software interfaces. The level of detail shall be sufficient to completely describe all CD-2 interface characteristics, sequences, and formats for interfacing with the external equipment and software.

3.12.1.10 NAS integration test procedures.- The contractor shall prepare detailed test procedures which provide assurance that the installed operational CD-2 equipment is correctly interfaced with its associated radar and data transmission equipment. The tests shall adjust and verify the timing, alignment, and other internal CD-2 adjustments required to adapt the CD-2 to the associated equipment. The accuracy of the CD-2 data output, and its correct functioning with the using facility's automated equipment shall be demonstrated. These integration procedures shall use the diagnostic programs, equipment and procedures in current FAA use to the maximum extent possible. Once approved by the Government, these procedures shall be used for the integration tests specified in 4.3.8 herein.

3.12.1.11 Electromagnetic interference control plan.- The contractor shall prepare and submit an electromagnetic interference control plan detailing the contractor's plans and methods to be used .to satisfy the requirements of 3.5.1.9 herein. The plan shall be prepared in accordance with paragraph 4.3 and related subparagraphs of MIL-STD-461A, Notice 4 (EL). Once approved by the Government, the plan, together with and subject to this specification, shall be binding on the contractor.

3.12.1.12 Deleted.

12.2 Hardware documentation.- The following subparagraphs specify the documentation requirements for the CD-2 equipment hardware.

3.12.2.1 Reliability and maintainability documentation.- The contractor shall document and provide the results of its reliability and maintainability programs as specified herein.

3.12.2.1.1 Reliability program plan.- The contractor shall prepare a reliability program plan as specified in 3.9.3.1. A preliminary plan shall be submitted with the bidder's proposal as required by the solicitation. Upon approval by the Government, the preliminary plan shall become the basis for a final program plan which shall be submitted as established in the contract schedule.

3.12.2.1.2 Reliability status report.- The contractor shall prepare reliability status reports as specified in 3.9.3.3.10. As they become available, the results of-the following reliability program tasks shall be fully presented in the' status reports:

(a) Thermal design analysis (3.9.3.3.2)
(b) Reliability requirements allocation: (3.9.3.3.3)
(c) Reliability predictions (3.9.3.3.4)
(d) Total logistic predictions (3.9.3.3.5)
(e) Failure modes, effects, and criticalness analysis (3.9.3.3.6)
(f) Failure summaries (3.9.3.3.9)

3.12.2.1.3 Maintainability program plan.- The contractor shall prepare a maintainability program plan as specified in 3.9.4. 1. A preliminary plan which includes the preliminary maintenance predictions required by 3.9.4.3.5 shall he suhmitted with the bidder's proposal as required by the solicitation,. Upon approval by the Government, the preliminary plan shall become the basis for a final' program plan which shall be submitted as established in the contract schedule.

3.12.2.1.4 Maintainability conceptlpn.- The contractor shall submit the maintenance concept plan (3.9.4.3.2) to the Government for approval as established in the contract schedule. The approved plan shall be incorporated into th-e remainder of the maintainability program as established by the approved maintainability program plan.

3.12.2.1.5 Maintainability status report.- The contractor shall prepare maintainability status reports- as specified in 3.9.4.3.8. As they become available, the results of the following maintainability program tasks shall be fully presented in the status reports:

(a) Maintainability design tradeoffs (3.9.4.3.4)
(b) Maintainability predictions (3.9.4.3.5)

3.12.2.2 Equipment instruction books.- The contractor shall prepare a manuscript plan and the draft and final, reproducible manuscripts. for the CD-2 equipment instruction books as established in the contract schedule. The manuscript plan shall also address the software documentation identified in paragraph 3.12.3 and related subparagraphs herein. The manuscript plan and its schedule shall be prepared in accordance with paragraph l-3.3 and its subparagraphs of FAA-D-249411, except that a minimum of three months shall be allowed for Government printing of the instruction books. The plan shall include sample drawings and text of the types proposed for use in the software documentation and equipment instruction books. The contractor procedures and validation plan required by paragraphs l-4.2.3 and l-4.2.7.2 of FAA-D-2494/1 respectively, shall be included in the manuscript plan. Upon approval by the Government, the plan shall, subject to and in conjunction with this specification and contract, be binding on the contractor. The approved plan shall prevail in the event of conflict between itself and paragraph l-3.9 and its subparagraphs of FAA-D-2494/ 1.

The CD-2 equipment instruction book shall include sufficient level of detail on the hardware and software to provide an understanding of all CD-2 functions. The software discussion in this and similar equipment instruction books shall consist of simple statements and descriptions of the processing algorithms used and may include one or more high level flow charts for each microprocessor. Reference shall be made to separately supplied software data for more detailed information. The manual's organization, content, and level of detail shall be such that CD-2 system problems, and problems concerning the interfaces with external systems and devices are able to be diagnosed and remedied by maintenance personnel who were trained using the instruction book as a text. Separate, "stand-alone" instruction books shall be provided which describe the theory of operation, maintenance, and repair of the CCA test set and,

if purchased, the input simulator. Where commercial items are a part of the CD-2, the manufacturer's commercial level maintenance data may be referenced or incorporated into the instruction book upon approval of the Government.

The manuscripts for the instruction books shall be prepared in accordance with the approved manuscript plan and FAA-D-2494/1 and FAA-D-2494/2 as modified herein. The use of abbreviations on drawings and in text shall be minimized as much as possible. When used, the abbreviations shall be in accordance with American National Standards Institute (ANSI) Y1.l (1972). All references to and examples of keyed text and shading of drawings in FAA-D-2494/1 and FAA-D-2494/2 shall not apply to this procurement.

3.12.2.2.1 Manuscript reference designations.- The reference designations, symbols, and abbreviations used in the manuscripts shall conform to the requirements of paragraphs l-3.5 and its subparagraphs of FAA-D-2494/1 as modified by paragraph 3.5.2.11 herein. Also, the last two sentences of paragraph l-3.5.4 of FAA-D-249411 shall not apply to this procurement. Digital logic diagrams shall conform to the requirements of FAA-STD-010 except that American Standards Institute (ANSI) Y32.14 (1973) shall be used in lieu of MIL-STD-806B. The distinctive symbol shapes of Y32.14 shall be used wherever possible. The symbols used shall reflect the actual logical function of the circuitry. Thus, the NAND gate used as a NOR with active low-level input signals, shall be shown as an OR symbol with "bubbled" (active low) inputs. Each discrete logic gate shall be shown on the detailed drawings with all of its input and output signals and their mnemonics. Thus, 'an inverter driving a NAND gate shall be drawn as such, not as a NAND gate with one inverted (bubbled) input. All mnemonics shall have the same number of characters and each shall indicate whether a logic high or a logic low is the active (true) condition for that signal.

3.12.2.2.2 Standard safety notices.- The standard safety notices specified in paragraph 1-3.7.6.1 of FAA-D-249411 shall be used, except where modification to the wording is required to suit the equipment capabilities and the maintenance concept (e.g., removal of CCAs with power on). Under no circumstances, however, does this exception permit an unsafe procedure to be utilized in operating or maintaining the CD-2 equipment.

3.12.2.2.3 General description.- The general description in Section 1 of the instruction books shall include the Military use of the MIG in addition to the requirements of FAA-D-2494, paragraph l-3.8 and related subparagraphs. The use at Military data tie CD-2C sites (i.e., those without a Military junction box) of otherwise spare terminals and connectors in the CD-2C common junction box for connection to the Military data transmitter sets (modems) shall be clearly described in the level 1 theory or Section 1 of the instruction book, or both.

3.12.2.2.4 Technical description.- The technical description in Section 2 of the instruction books shall be in accordance with the approved manuscript plan (3.12.2.2) and paragraph l-3.9 and related subparagraphs of FAA-D-2494/1 as modified and limited herein.

3.12.2.2.4.1 Theory of operation.- The theory of operation of the equipment's hardware shall be presented in at least three levels. The first level shall be a complete-and detailed description of the signal flow and information exchange between CD-2 modules and between the CD-2 equipment and the associated.external equipment. This level of theory, in conjunction with the general description of Section 1, shall suffice to completely describe the overall CD-2 system, including the major

functions of each module, the system-level and module-level data paths and all interconnection details necessary to interface the CD-2 to its associated radar equipment.

The second or intermediate level shall describe the major function signal flow and control features for each module. This level shall provide all of the information necessary for "remove and replace" troubleshooting on the system level and the module level. The third or most detailed level shall contain all of the information necessary for understanding the detailed functions of each module and the circuit and logic details at the functional level. All interface receiver and driver circuits, for both intermodule and external signals, shall be thoroughly described to the individual component level.

New or unusual circuits shall be described thoroughly and in detail. Descriptions shall be technically precise and shall use discrete, well-defined conditions and states. Generalities and vague or misleading statements shall be avoided. Specific logic conditions and levels shall be used when describing a logic operation or permissible states. Binary counters, parallel-to-serial registers, logic gates, adders, and other standard logic circuit functions need not be described in detail. However, the microprocessor chips, memory chips, and all other large-scale-integration digital and linear circuits shall be thoroughly described.,

The depth of the theory shall be sufficient to describe the functions and operation of each individual circuit and its relationship to the module or assembly of which it is a part. The text shall be supported by appropriate illustrations, photographs, and diagrams. The text and its associated figures shall always agree in both the level of complexity and the technical content. The diagrams shall reflect the configuration described in the text and shall not contain references to deleted parts or-functions to be added, unless the added functions are an inherent part of the equipment's design (e.g., addition of the Military interface group). The text shall refer to signals by the name with which they are identified on the associated drawing. For example, if a diagram shows signal XYZ as the reset input to U4B, then the text must also mention XYZ when describing the operation of U4B. It is not sufficient to merely say "...the reset into U4B...".

3.12.2.2.4.2 Technical illustrations.- The technical illustrations used in the instruction books shall be clear, technically accurate and, where supporting a portion of text, of a complexity appropriate for the text's level of detail. The illustrations shall be equivalent in # technical content and scope to the example figures in the approved manuscript plan or FAA-D-249411. Special symbols shall be kept to an absolute # minimum; normal electronic component and logic symbols (3.12.2.2.1) shall be used to the greatest extent possible. The cited exanple figures are intended to convey a sense of the desired form and coverage. The precise format details shown in the examples need not be followed, provided that the technical content and depth of coverage are not compromised. Photographs and other illustrations shall be included as necessary to support and complete the technical descriptions.

To the extent possible, consistent with keeping the sizes of the volumes manageable, the illustrations which support the general description and levels one and two theory descriptions *shall be included with the text. They may be specific or general block diagrams of functional elements, as appropriate. The detailed logic and schematic drawings which show the wire-by-wire interconnections for the complete equipment shall be bound in a separate volume to facilitate handling and analysis of the information.

Specific requirements for the technical illustrations are presented in the following subparagraphs:

(a) The term "device" in paragraph l-3.9.2.2 of FAA-D-2494/1 shall include CCAs and other plug-in or wired-in assemblies, or units of similar complexities.

(b) Logic circuit diagrams shall show the multiple circuits or functions of integrated circuits and similar devices as separate logic blocks or components in lieu of the one-for-one relationship specified in paragraph l-3.9.2.5 of FAA-D-249411. The multiple blocks shall be distinguished with letter suffixes to facilitate identification (e.g., U2A, U2B, etc.). In the event that the functions of a logic chip are split such that, for example, three bits of a four-bit-wide memory chip are used in one function and the remaining bit is spare or is used elsewhere, the logic diagram representations of each part of the chip shall indicate which part of the chip (which bits, in this example) are used in each function.

(c) All multi-sheet block, logic and schematic diagrams shall have sheet-to-sheet mapping which permits signal tracing in both directions. All lines entering or leaving a multi-sheet diagram shall be identified by mnemonics or other signal names. Each such line which goes to another sheet or sheets within the context of the theory discussion supported by the drawing shall show all appropriate source or destination sheet numbers except for those lines (such as buses) that go to more than three such sheets. The lines may have separate destination or source tabulations. Signals leaving or entering via connectors, jacks, or plugs must have the connector, jack, and plug reference designations, pin numbers and cable numbers as applicable. An indication of the direction of the information flow shall be provided for each entering or exiting signal. The indicators shall be near the edge of the diagram and shall be independent of any connector symbology. Al.1 logic and schematic diagrams shall have alphanumeric zone coordinate:. consisting of equally-spaced alphabetical divisions along the left-hand border and equally-spaced numerical divisions along the top border. The signal mapping on these diagrams shall use the zone references, and the entry and exit points for such signals need not be located at the page edges as is required above for all other multi-sheet drawings.

(d) All components shown on simplified or intermediate diagrams shall be identified by reference designations ro permit ready reference to the same components on the associated detailed diagrams. Signal names shall also be cross-referenced for the same reason. The detailed logic and schematic diagrams shall include complete and specific reference designations for each component. Each component shall be, identified by a value or a part number (e.g., 400K, SN7404, etc.> . as applicable. Large-scale integrated circuit chips shall be identifiec by function (RAM., CPU, adder, etc.). Each component in a tietailed

diagram shall have all of its signal pin connections shown, even those that are grounded or not used, and all signal lines shall be fully identified. The detailed logic diagrams shall not be annotated with verb-noun statements as specified in paragraph l-3.9.2.5.2 of FAA-D-2494/1.

(e) Complex self-test circuits shall be shown as separate functions on separate diagrams.

(f) The schematic diagram or logic diagram or both for a CCA or other plug-in assembly shall be shown on a page or pages immediately preceding the circuit board (baseboard) illustrations, in lieu of the requirements of the last sentence of paragraph l-3.9.2.8 of FAA-D-2494/1.

(g) Wiring diagrams and lists shall show all cables, wiring, conductors, connectors, plugs, jacks, sockets, and pins, in addition to the information required by paragraph l-3.3.2.10 of FAA D-249411.

(h) In lieu of the requirements of paragraph l-3.9.3.7 of FAA-D-2494/3, each functional entity such as an amplifier stage, a logic comparator, a memory, etc., shall be identified by an appropriate functional stage name. The name shall be written in full or abbreviated. Single components shall be identified by their reference designations.

(i) In lieu of the requirements of paragraph l-3.9.3.8 of FAA--D-2494/1, the drawings shall be identified as specified herein. All detailed drawings which show a portion of more than one CCA or similar physically-partitioned assembly of the same or greater approximate complexity shall use dashed outlines to clearly show the physical boundaries of such assemblies. Thus, components on a plug-in assembly shall be enclosed by a dashed outline to distinguish the assembly from the next higher assembly or module. Each hardware assembly or portion thereof which is shown on a diagram, even if not shown in conjunction with other levels, shall be identified by official nomenclature (FAA type number), if applicable, and by reference designation and the manufacturer's assembly or part number. These requirements also apply to modules, cabinets and similar items in higher-level diagrams, although the dashed lines are not required if the required delination of units can be clearly presented without them.

(j) The use of equivalent circuits, as permitted by paragraph l-3.9.5 of FAA-D-2494/1, shall be subject to individual approval by the Government during the review of the manuscript.

(k) In lieu of the requirements of paragraph 1-3.14.5.1 of FAA-D-2494/1, individual components within analog or linear integrated circuits need not be shown on the maintenance diagrams, provided that sufficient information is presented to permit adequate troubleshooting and provided that the chip's circuit diagram is available elsewhere within the instruction book.

(1) Notes shall be provided on each diagram as necessary to explain conditions shown, to clarify special symbol or signal conventions or to identify differences between equipment configurations.

3.12.2.2.5 Fault isolation procedures.- Paragraph 1-3.14.6.4 of FAA-D-2494/1 is modified to require the isolation methods and procedures to be in accordance with the approved maintenance concept and maintenance program plan. The procedures shall enable fault isolation to the lowest possible and practical replaceable or repairable item. Automatic test equipment- and procedures shall be used as much as possible. The procedures shall also be structured to minimize the system out-of-service time.

3.12.2.2.6 Installation, integration and checkout.- The instruction book shall not contain the information required in paragraph l-3.16 and related subparagraphs of FAA-D-249411 since the information is to be provided in the installation documents and as-built drawings required in 3.12.1.7 and 3.12.1.8 herein. Section 9 of the instruction book shall contain suitable cross-references to these separate documents.

3.12.2.2.7 Computer software.- The instruction book shall not contain the information required in paragraph 1-3.18 and related subparagraphs of FAA-D-2494/1 because the information is to be provided in the software documentation furnished in accordance with 3.12.3 herein.' Section 11 of the instruction book shall contain suitable cross-references to this separate documentation.

3.12.2.2.8 Foldouts.- The use of foldouts shall be kept to a minimum consistent with clear and complete presentation of the required material. Each foldout shall be able to be easily extended and refolded with its free edge to the outside edge of the document. In the folded position, all page numbers, document numbers (e.g., TI-4234), figure numbers, and titles shall be visible for both the left-hand and the right-hand printed pages. (This is a clarification of the parenthetical phrase in paragraph 2-3.11.1 of FAA-D-2494/2.)

3.12.2.3 Drawings and technical memoranda.- The contractor shall maintain an index of all drawings and technical memoranda produced in connection with design, fabrication, and test of the equipment. This index shall be updated and copies provided to the Government with the management reports (3.12.1.1.1). All lined pencil work and lettering shall be of such quality that it can be clearly reproduced to at least a second-generation copy. All drawings submitted by the contractor shall meet the requirements of FAA-STD-002. The contractor shall provide drawings or technical memoranda that may be requested by the Contracting Officer as listed in any index furnished in accordance with this requirement.

3.12.2.4 Provisioning technical documentation.- Provisioning documentation shall be supplied in accordance with FAA-G-1210 as established in the contract schedule..

3.12.3 Software documentation.- The contractor shall deliver all documentation necessary for FAA personnel to maintain and modify all deliverable CD-2 computer programs, regardless of the microprocessor or the delivered format (ROM, PROM, etc.). The software description manuals shall be prepared in accordance with the approved manuscript plan and paragraph l-3.18 and related subparagraphs of FAA-D-2494/1. The approved plan shall prevail in the event of conflict between itself and FAA-D-2494/1 for this software documentation. Commercial documentation may be a part of, or referenced in these manuals only upon justification to and receipt of written approval from the contracting officer.

3.12.3.1 Operational program documentation.- The operational program documentation shall include a program description manual and an operator's manual. The program description manual shall contain complete listings for the computer programs identified in 3.8.1 herein. The listings shall include appropriate comments to describe each line of code.

3.12.3.1.1 Program description manual.- A program description manual which describes the functional requirements of all operational programs and their relationships to the hardware and to the interfaces between other components of the system shall be provided. The manual shall provide an overview of all operational and self-test program routines and shall reference other related program documentation. The program description manual shall also describe in detail the functional specifications, interfaces, flow charts, and instruction coding for each program routine described.

The program description manual shall include but not be limited to the following:

(a) The manual shall specify the procedures for maintaining and updating the manual and identify the relationship of this manual to the other software documents.

(b) The manual shall provide a detailed explanation of conventions adopted within the operational program with respect to flowcharting, table names, data names, routine labels, and calling sequences.

(c) The manual shall provide a detailed explanation of hardware related programming factors such as input and output formats, codes, bit arrangements for control characters, communication sequences, and both normal and error interrupt processing.

(d) The manual shall describe how initialization data that are modified from site to site and for different CD-2 configurations are handled by the program.

(e) The manual shall provide for each subprogram within the operational program, a narrative description, specification of the program inputs, outputs and their definitions, a list of all flags, the CD-2 module functions performed, and the specific methods employed. The contractor shall provide specifications in this section showing

table definitions, storage allocation and identification of reserved registers. For each subprogram, the contractor shall provide a detailed flow chart which references the general flow chart and the detailed flow charts of those subprograms within a CD-2 module's program which create input for it or receive output from it.

(f) The manual or supplementary documents shall provide complete program listings.

(g) The manual shall include computer program functional descriptions prepared in accordance with the approved manuscript plan.

3.12.3.1.2 Operator's manuals.- The contractor shall prepare and deliver
two separate operator's manuals: one for the CCA test set (3.6.3.1) and one for the input simulator (3.6.3.5) when it is a deliverable item. Each manual shall provide a thorough description of the uses of the equipment. The manual shall clearly indicate its relationship to other program documentation, identify procedures for updating the manual, describe the location and function of all operator controls, describe the use of all peripheral equipment, and provide detailed operating
procedures. These procedures shall include a complete list of operator error halts, and initiation, intervention, and other actions permitted or required of the operator.

3.12.3.2 Support program documentation.- The support (nonoperational) program documentation shall include but not be limited to, an assembler reference manual, an assembler operator's manual, a utility system and program description manual, a programmer's reference manual, and a maintenance and diagnostic program and user's manual. In addition, complete listings for each program shall be provided. The listings shall include appropriate comments to describe each line of code.

3.12.3.2.1 Assembler reference manual.- An assembler reference manual which describes all actions required to prepare source language statements, initiate assembly, and analyze results as to encountered error conditions shall be provided. The reference manual shall contain sufficient detail to enable programmers to produce computer programs.

3.12.3.2.2 Assembler operator's manual.- An assembler operator's manual
which includes initiation and intervention procedures, a complete list of possible error halts, and all actions required of the operator shall be provided.

3.12.3.2.3 Utility system and program description manual.- Deleted.

3.12.3.2.4 Programmer's reference manual.- A programmer's reference manual which includes a description of the computer instructions, commands, and orders used in an operational machine program shall be provided. The manual shall also include, but not be limited to, information on

instruction timing, use of index registers, logical and arithmetic operations, data transmissions, input and output operation, use of indicator lights and branch switches, examples of assembly language usage for each instruction, and other such programmer reference material.

3.12.3.2.5 Deleted

#

3.12.3.3 Test program user's manual.- The contractor shall provide a user's manual for all deliverable test programs (3.8.3). The user's manual shall include a program listing, initiation and intervention procedures, a complete list of possible operator or error halts, and all actions required of the operator or test personnel. Listings shall include complete step-by-step comments to describe each line of code.

3.13 Government-furnished equipment.- The dual-channel CD-2 shall provide for the installation and use of a single Government-furnished azimuth data converter (ADC) as a second source of azimuth data. The ADC unit may be mounted within the maintenance console, provided that the accessibility requirements are met (3.5.2.1 and 3.9.4.3.2). The converter is housed in a ruggedized aluminum case which measures '6.5 inches 'wide by 7 inches deep by 3 9/16 inches high (16.5 cm by 17.8 cm by 11.6 cm). It weighs approximately 7.5 pounds (3.4 kg). The cover is secured by three screws and is removed as indicated in Figure 11 to gain access to the-internal parts. A functional block diagram of the ADC appears as Figure 12 ;the test command switch shown in dashed outlines is not a part 'of the converter as furnished by the Government,

3.13.1 Mechanical requirements for the, ADC unit.- The contractor shall Include provisions for mounting the ADC unrt within the CD-2's cabinetry. The converter shall be accessible for diagnostic and repair purposes while operating, and with one or more of its boards extended. This requirement may be satisfied by means of long connecting cables 'and quick disconnect mounting fasteners, providing that all other requirements of this specification are met. Figure 13 shows the ADC unit's mounting dimensions.

3.13.2 Electrical requirements for the ADC unit.- The CD-2 shall provide power and signal connections to the ADC using the appropriate mating connectors as specified herein. The 'ADC uses the 117 V ac synchro reference voltage as both a reference and as an energy source for some of its internal power supplies. The unit also requires 0.7 amperes from a +5 V dc source '"which is external to the ADC. The operating CIM or CIMs shall provide this power as specified in 3.4.3.1.3.1.1. As indicated in Figure 14a, all signal and power connections shall be made via two connectors. The contractor shall furnish the mating connectors (MS3116F14-5S and MS3116F14-18S)

and all appropriate cabling to connect the ADC to the CD-2 and to the synchro input signals. The ACP, ARP, and error alarm signals are generated by an output buffer as shown in Figure 14b. The true (correct) ACP output is ACP "A" and its timing relationship with the ARP is shown in Figure 14c. The ACP "B" output may be ignored. The alarm condition is represented by a high output.

3.13.3 ADC functional requirements.- The CD-2 shall accept and process the ACP "A" and ARP data from the ADC as specified in 3.4.3.1.3.1.1. The ADC alarm condition shall inhibit the automatic selection of the ADC as the azimuth source, and shall be monitored, reported, and displayed as required in 3.4.3.1.3.5.1 and 3.4.3.1.7.2.. The ADC shall be able to be placed in a test or a normal mode by returning J1, pins N or M respectively, to pin L. This control shall be exercised from the front panel of the maintenance console. The test bit shall be set in all output messages when the on-line CD-2 channel is using ADC data and the ADC is in the test mode.

4. QUALITY ASSURANCE PROVISIONS

4.1 General.- The contractor shall provide the test facilities, instrumentation and services which are acceptable to the Government and that are required to perform the tests specified herein. Complete records of all tests, including examinations and inspections shall be kept and made available to the Government as required herein. The Government reserves the right to witness or perform any of the tests set forth in this specification when such action is deemed necessary by the Government to assure that the equipment and services conform to the prescribed requirements. All of the tests shall be conducted by the contractor in accordance with the test methods in the Government-approved test plans and procedures (3.12.1.3, 3.12.1.4, and 3.12.1.10). The tests shall demonstrate the equipment's compliance with all of the requirements of this specification. The contractor shall furnish adequate notice of the time, place, and manner in which the equipment is to be tested. The following tests, as a minimum, shall be conducted:

	Test	Reference Paragraphs
(a)	Quality control inspection and tests	4.3.1
(b)	Contractor's preliminary tests	4.3.2
(c)	Design qualification tests	4.3.3
(d)	Type tests	4.3.4
(e)	Production tests	4.3.5
(f)	Availability calculation	4.3.6
(g)	Onsite tests	4.3.7
(h)	Integration tests (when required by the contract)	4.3.8

Except as otherwise required herein, the tests specified in (a), (e) and, in the event that contractor installation is required by the contract6 (g) above shall be conducted on each equipment procured with this specification. The tests specified in (h), (c) and (f) shall be conducted using any of the CD-2 systems and related'cireuit card assembly test sets (3.6.3.1) that are presented to the Government. The actual

systems to be tested and the test schedules necessary to deliver the systems at the times established in the contract shall be in accordance with the approved test plan (3.12.1.3). These three tests shall be repeated on the first article of each subsequent CD-2 with a configuration which is different from the first CD-2 system. To reduce duplication of effort, the repeated tests of (b), (c) and (f) may address only the new functions and equipment in these subsequent configurations. These results shall be combined with the appropriate results of the first system's tests as required to meet the required test objective for the new configuration;

In order to minimize test time, the reliability test and demonstration portion of the design qualification tests shall be performed using any combination of the production equipments available, regardless of the configurations of those equipments. In the event that one or more of the selected equipments is not of the configuration specified in 3.9.2, appropriate modifications to the MTBF to which the equipment is to be tested shall be made as provided for in the approved reliability test plan.

The equipment on which the type tests are to be performed shall be selected from the first seven systems.

The reliability and maintainability tests (4.3.3.3 and 4.3.3.4) need not be performed on the program development set and input simulator. Further, since these equipments are built to the best commerical standards, the environmental tests herein (4.3.3.2) are also not required for them.

As provided by the contract schedule, the integration tests shall be performed on all CD-2s which are installed at operational facilities.

4.1.1 Testing requirements.- The contractor shall furnish all cables, connectors, terminal boards, test cables, test equipment, card extenders, and other similar items as required for the tests and inspections specified herein. All test equipment shall meet the requirements of FAA-STD-016 or, where that standard does not apply, the requirements of paragraph 1-4.4 and related subparagraphs of FAA-G-2100/1. Any modifications performed by the contractor to bring the equipment into conformance with this specification shall be accomplished in accordance with all applicable requirements herein. For example, modifications to intercomponent connections on CCAs using printed wiring shall be accomplished in accordance with FAA-G-2100/4 as specified in 3.5.2.8.2.3 herein. Equipment changes made during, or at the end of, the testing shall be subject to additional testing to assure correction of the deficiencies necessitating such changes. The necessary retesting shall be determined by the Government. No CD-2 system after system number 60 shall be released for shipment before the first unit of each CD-2 system type has successfully passed tests 4.1(a), (b), (c), (d), (e), and (f), and the results have been declared to be satisfactory by the Government. Notice of the contractor's preliminary tests, as well as all other test activities in which the Government retains its right to participate or observe, shall be given as specified in paragraph 1-4.3.1.2 of FAA-G-2100/1. The system-level testing shall not begin until the equipment instruction books or equivalent data are available.

4.1.2 Recording of test data.- Logs for each of the tests herein shall be prepared by the contractor and submitted as part of the test plan. There shall be two types of logs maintained: an operating log and a maintenance log. Maximum use of cross-referencing between logs shall be made so that both logs contain all incidents and maintenance actions with their appropriate downtime. The logs will be monitored by the Government or its designated representative who will co-sign the logs on a shift basis. The format of the logs shall require Government approval prior to their use.

4.1.3 Test direction.- Factory testing and the onsite tests (4.3.7) shall be conducted by the contractor. The contractor shall determine when items are ready for test, when corrective action is necessary, and what corrective action is required. After corrective action is completed, the Government will determine if a retest is necessary. Any change to the equipment after it is submitted for test shall require Government approval. If the Government determines that a change is of major significance, the Government may require the test to be repeated.

4.1.4 Failure recording and reporting.- All failures during the test program specified in 4.1(b) through 4.1(e) inclusive shall be recorded and reported in the final test reports (3.12.1.5). Along with a complete summary of the failure as required by 3.9.3.3.9 herein, the following data shall be included:

(a) Time of day failure occurred.
(b) Downtime reported to the nearest minute.
(c) Time of restoration of equipment to full service.

For the purposes of these tests, the equipment shall be considered failed if any of the following occurs:

(a) The CD-2 fails to send data to any enabled data transmission channel (FAA or USAF) or to the displays or printer used with the system monitor and diagnostic functions.

(b) There are any unintended alarms.

(c) The CD-2 fails to respond within 10 seconds to any legal command as defined in, and entered in accordance with the procedures in, the equipment instruction book.

4.2 Test conditions.- Unless otherwise specified, all tests and inspections shall be conducted in a normal human working environment with the equipment subject to ambient air with a temperature of +25 +5°C. The equipment under test shall be supplied with primary power which is within five percent of the design center values of 3.3.2.2. If, during conduct of a test, the approved test plans, procedures, methods, or parameters are found to be inadequately specified, the test shall be held in abeyance until a Government-approved amendment is available. When an approved change is available, the test shall be resumed at the point of interruption, providing that the interruption does not invalidate the test results.

4.3 Tests and inspections.- The contractor shall conduct, analyze, and report the following tests and inspections using the applicable, approved test documentation,

4.3.1 Quality control, inspection and test.- The contractor's quality control program shall be in accordance with paragraph l-4.1 of FAA-G-2100/1, paragraph l-4.2 and related subparagraphs of FAA-D-2494/1, and the requirements specified below.

4.3.1.1 Incoming inspection.- The Government may elect to make an incoming inspection of some or all of the parts and materials used in the equipment, to assure compliance with paragraphs l-4.5 and related subparagraphs of FAA-G-2100/1. The successful inspection of the parts and materials shall not constitute final acceptance or approval of their specific applications in the equipment.

4.3.1.2 Unit production inspection.- Each unit, module, and assembly to be provided under the contract shall be given a mechanical and an electrical inspection. The mechanical inspection shall include a visual examination to determine compliance with the applicable specification requirements covering strength and rigidity, accessibility, types of components and materials, choice of insulation, layout of chassis, panels and wiring, finishes, workmanship, and similar attributes. The electrical inspection (or bench test) shall include tests which determine the compliance of the equipment with all application specifications, including those of the contractor, which cover electrical requirements and performance. Electrical continuity, leakage resistance, power supply voltages and regulation, battery backup, display operation, clock accuracy and stability, and similar characteristics shall be included. In the event that the contractor determines that certain specification requirements do not have to be so inspected for quality control, it may request waivers for those items from the Government in writing. Units built and successfully inspected may be retained by the contractor in order to enable testing and integration with associated units. However, prior to delivery to the Government as a part of a complete, deliverable system, all such units shall be reinspected to verify that no damage has occurred in storage or handling since the initial inspection.

(Blank)

4.3.2 Contractor's preliminary tests.- The contractor shall per-form preliminary tests in accordance with paragraph l-4.3.1 of FAA-G-2100/1.

4.3.3 Design qualification tests.- The contractor shall perform the following design qualification tests as a minimum:

4.3.3.1 General characteristics tests.- The general characteristics tests shall be conducted in accordance with paragraphs l-4.3.2.1 and l-4.3.2. 2 of FAA-G-2100/1 except that the noise level test of paragraph 1-4.3.2.2.2(e) is required on each complete, deliverable equipment type,, and paragraphs 1-4.3.2.2(k) through (q) are not applicable. The tests shall also verify compliance with the field reconfiguration requirements of paragraph 3.4 and the general design requirements of paragraph 3.5 and related subparagraphs herein.

4.3.3.2 Performance test.- This test shall establish that the equipment fully satisfies the requirements of 3.2, 3.4, 3.6, 3.8, and all related subparagraphs. The test shall be conducted in accordance with the approved test plan and procedures and shall verify the following functions as specified in the referenced paragraph and their subparagraphs, as applicable to the equipment under test:

	Function	Reference Paragraph
(a)	Overall performance	3.4.1
(b)	External equipment interfaces	3.4.2.1
(c)	Internal CD-2 interfaces	3.4.2.2
(d)	Beacon target extractor performance	3.4.3.1.1
(e)	Search target extractor performance	3.4.3.1.2
(f)	Control and interface module performance	3.4.3.1.3
(g)	Maintenance console performance	3.4.3.1.4
(h)	Military interface group performance	3.4.3.1.5
(i)	CD-2 operation and control	3.4.3.1.6
(j)	Status monitoring, reporting and display	3.4.3.1.7
(k)	Circuit card assembly tester performance	3.6.3.1
(l)	Suitability and adequacy of plug-in assembly extenders	3.6.3.2
(m)	Program development set performance	3.6.3.3
(n)	Suitability and adequacy of special tools and ancillary items	3.6.3.4
(o)	Xnput simulator performance	3.6.3.5

In addition, the capacity and response time of 3.4.1.4 and growth requirements of 3.4.1.8 shall be tested or verified by inspection. #

The electrical service condition test shall be conducted in accordance with paragraphs l-4.8 and l-4.11 of FAA-G-2100/1 and the requirements herein. A test at each extreme of line frequency shall be performed. With the line frequency at the normal test value, tests shall be performed over the line voltage service condition range. The equipment's performance in the presence of electrical transients shall be demonstrated by testing. The start-up surge and power consumption tests shall be accomplished under normal test condition< .

The contractor shall supply cabling of the appropriate type and the maximum length required in 3.4.2 for all output signals from the operational CD-2. The output signqls shall be tested to verify that they meet the applicable requirements at the end of this cabling.

4.3.3.3 Reliability test and demonstration.- The reliability test and demonstration shall be conducted in accordance with the reliability test plan (3.12.1.3.1) and the requirements herein. Reliability development testing shall be performed in accordance with paragraph 5.3.2 of MIL-STD-785. The development tests shall be designed to identify problem areas, detect latent defects, and underscore deficiencies such that the corrective actions required to cause incremental reliability growth can be implemented as the equipment development proceeds. Development test results and data shall be included in the reliability status reports (3.12.2.1.2).

A reliability demonstration test shall be conducted on the units specified in 4.1 herein to establish compliance with the specified MTBF and availability requirements of 3.9.2 herein. The test shall be conducted under normal test conditions and shall be in accordance with test plan IV, test level A-l of MIL-STD-781, with no voitage cycling. The performance parameters of the production test and any other parameters necessary to adequately establish proper performance of the equipment shall be measured and recorded at least once every 12 hours. These parameters shall be specified in the reliability test procedures (3.12.1.4).

The demonstration tests shall be conducted in accordance with paragraphs 5.3, 5.4.2, 5.4.6, 5.4.7, 5.4.8, and paragraphs 5.5 through 5.10 of MIL-STD-781 except where otherwise required herein. The tests shall continue 24 hours per day, seven days a week until an accept-reject decision can be made. During the tests, all preventive maintenance prescribed for normal operational deployment of the equipment shall be performed by the contractor. Data on all failures and corrective and preventive maintenance times shall be recorded during the test, even if the failures or maintenance tasks involved no loss of data and, thus, are not counted as "failures" in the-reliability test. This maintainability data is in addition to that required elsewhere herein.

4.3.3.4 Maintainability test.- The maintainability demonstration test shall be conducted in accordance with test plan (3.12.1.3.2) and the requirements herein. The test shall be conducted under simulated operational conditions and shall establish whether or not the CD-2 and its supporting equipment meet the maintainability requirements of 3.9.2 herein, including MTTR but excluding bench repair time. The downtime shall begin with the loss or degradation of a capability to a user and shall stop

with the restoration of the full capability to have service. Test Method 1, Test Plan B of MIL-STD-471, Appendix B, shall be used with a consumer's risk value of 0.10. Appropriate corrective maintenance tasks for each equipment shall be generated by fault simulation in accordance with paragraph 4.3.1.2 and Appendix A of MIL-STD-471. The number of tasks shall be as specified by paragraph B.10.3 of MIL-STD--471 or 50, whichever is greater. The specific corrective maintenance tasks shall be proposed to, and approved by, the Government as a part of the test procedures (3.12.1.4). The preventive maintenance tasks tested shall consist of all those tasks prescribed for normal operationai deployment of the equipment.

The tests shall be administered in accordance with the requirements of paragraph 4.4 of MIL-STD-471. The appropriate maintenance procedures described in the equipment instruction book (3.12.2.2) shall be followed during the performance of this test. Whenever possible, the maintenance activities shall be performed on the off-line channel or supporting equipment.

4.3.4 Type tests.- The type test shall demonstrate that the equipment functions correctly under the service condition requirements specified in paragraph 3.3.2 and its related subparagraphs herein. If procured, the input simulator (3.6.3.5) shall be used as the source of the input signals required for these tests, unless a specific exemption is granted by the Government. In addition to the tests using the input simulator, the contractor may use instrumentation recordings of FAA radar data, including true and test signals, as the source of the required input signals. The specific tapes to be used shall be approved by the Government before testing begins, Government assistance in the preparation of the tapes may be provided if requested by the contractor.

The barometric service condition test shall be in accordance with the requirements of paragraph l-4.9 of FAA-G-2100/1 except that an actual test of the equipment's performance after at least five hours at each pressure extreme shall be performed. Normal temperature and humidity conditions are acceptable during the pressure test.

The temperature and humidity service condition test shall be conducted in accordance with paragraph 1-4.12 and all steps and subparagraphs of FAA-G-2100/1, except step 8.

The equipment shall be exposed to the nonoperating temperature, humidity, and altitude extremes, in any combination (at the contractor's option), for at least two hours before being returned to values within the operating conditions. At least two free-fall shock tests shall be performed (paragraph 3.3.2(c)). The equipment shall operate correctly after these conditions are imposed.

4.3.5 Production tests.- System production tests shall be performed on both channels and all auxiliary units of each complete CD-2 system and its supporting equipment procured under this specification. Tests shall be conducted using simulated inputs and suitable instrumentation to verify that the equipment complies with the major requirements of this specification, The spare CCAs and other assemblies supplied as spares with the system shall be substituted for Like items during system tests. Certain tests which may be impractical to pet-form with. the equipment operating as *a* complete system, may be performed on a bench test or group test basis only when specifically approved by the Government. System production tests shall be as specified in the test plan and procedures and shall include, as a minimum, the tests of paragraph 4.3.3.2(a), (g), (i), (j) and (k) herein. The production *teat* shall include a complete (to the greatest extent possible, considering the lack of actual radar inputs) calibration and alignment of the equipment in accordance with the instruction book procedures.

Following the production performance test, the equipment shall be operated continuously for at least 70 hours to demonstrate satisfactory performance in accordance with this specification. This test is a burn-in period designed to demonstrate continuous equipment performance for a several-day period without a relevant failure (3.9.1). An accurate log of any failures and subsequent corrective action taken shall be kept for each deliverable item to determine whether failures are repetitive and whether design changes are warranted. A copy of the equipment failure log shall be shipped with the equipment to the site. The following, outline shall be followed during the burn-in test:

(a) After a warmup period of approximately 20 minutes, tire equipment shall be aligned for optimum performance in accordance with the instruction book procedures. No further adjustments will be allowed for the duration of the test.

(b) Test measurements shall be taken at least, every 12 hours during the test.

(c) The equipment shall be operated continuously, with a simulated target load of at least 280 targets per *scan.* The CD-2's test target generator may be the source for these test signals.

(d) A more comprehensive test, to include the use of data entry devices and other normal operating controls shall be performed at least every 12 hours.

(e) During the last 12 hours of the test, each channel of the CD-2 shall be alternately de-energized for at least 0.5 hour and energized for at least one hour. This shall be repeated at least two times during the 12-hour period. Minimum acceptable performance during this period is continuous simpler. operation.

(f) During the last half hour of the test, a simulated power failure test shall be made. All power to the equipment shall be interrupted for at least 30 seconds and then reapplied. When power is restored, the operational CD-Z equipment shall resume normal operation with no alarms and without requiring any equipment adjustments or manual intervention. The supporting equipment (3.6) shall come up in an idle state with no damage, errors or faults other than those which are correctable by reinitialization of the activity in progress at the moment of power loss.

(g) All observations of malfunctioning or instability in the system shall be recorded on test data sheets (3.12.1.4) which shall serve as a log or history of the test. Entries into the log may be made by the Government representatives without concurrence of the contractor's representatives and vice versa. The contractor shall include proposed pass-fail criteria in the test plan which are consistent with the reliability requirements.

(h) All specification requirements shall be met during the test period without readjustment of controls, other than normal operational controls.

The production test shall also include an inspection of preservation, packaging, packing, and marking of material for shipment and storage to assure conformance with the requirements of section five herein.

4.3.6 Availability calculation.- The availability of the operational CD-2 equipment shall be established using data from the reliability test and demonstration (4.3.3.3), the maintainability test (4.3.3.4), and the burn-in portion of the production tests (4.3.5). Only data taken during the time when the CD-2 is operating in the automatic channel change mode (3.4.1.6) shall be used for this calculation. System downtime as the result of routine, scheduled preventive maintenance shall not be counted, provided that the recovery requirements of 3.9.1 are met. The recovery shall be successfully demonstrated at least twice for each such preventive maintenance routine before its downtime is deducted from the total downtime.

4.3.7 Onsite acceptance test.- Upon completion of the contractor's installation of equipment at an operational or a nonoperational facility, the contractor shall perform an onsite acceptance test in accordance with the approved test plan and the requirements herein. The test shall consist of at least the following:

(a) The test shall verify that the installation has been correctly completed in accordance with the approved site installation documents and as-built drawings.

(b) The test shall verify the integrity and capability of the CD-2 and its supporting equipuent to operate correctly using only internal timing and test signals. No alarms or abnormal conditions shall exist that were not present during production tests. No interconnection

to the associated radar or data transmission equipment shall te required for this portion of the test. These requirements must 'be satisfactorily established before proceeding with further tests.

(c) The test shall verify that the operational CD-2 equipment can operate and process targets from the triggers, videos, and azimuth data provided by the associated radar equipment. The test shall show that the CD-2 correctly provides and interprets the electrical characteristics of all of the interface signals (3.4.2.1) which have application at that site. Accurate and alarm-free operation with the associated radar equipment is not required at this time; only a demonstration that live targets are presented on the maintenance console is required.

4.3.8 Integration tests.- When required by the contract, the contractor shall adapt the CD-2 operational equipment to the parameters of the associated radar equipment in accordance with the NAS integration test procedures (3.12.1.10). During this test, all functions and combinations of functions shall be exercised. As many interfaces and functions shall be active for this test as facility operational requirements will permit.

5. PREPARATION FOR DELIVERY

5.1 System and equipment deliveries.- The contractor shall package, pack, and ship all CD-2 systems and equipment so that it arrives safely at its destination. The responsibility for meeting this requirement remains Fully with the contractor until final acceptance of the equipment by the Government. The Government will not be responsible for packaging, packing, shipment, storage, or handling of the equipment before final acceptance is accomplished. Spare parts for equipment locations (3.7.1) shall be included with the equipment and are subject to the sane delivery requirements as the equipment. Equipment for which contractor installation is not' required by the contract shall be preserved, packaged, packed and marked in accordance with MIL-E-17555, Level A.

5.2 Depot spare parts deliveries.- To facilitate handling, storage, and distribution of spare parts provided to the FAA Depot, the contractor shall preserve and package the depot spare parts (3.7.2) in accordance with MIL-E-17555, Level A. The parts shall be packed and marked in accordance with MXL-E-17555, Level B. In the event that cathode ray tubes are included in the approved spares package, they shall be preserved, packed and packaged in accordance with MIL-E-75, Level A.

6. NOTES

This section is not applicable to this specification.

* * * * *

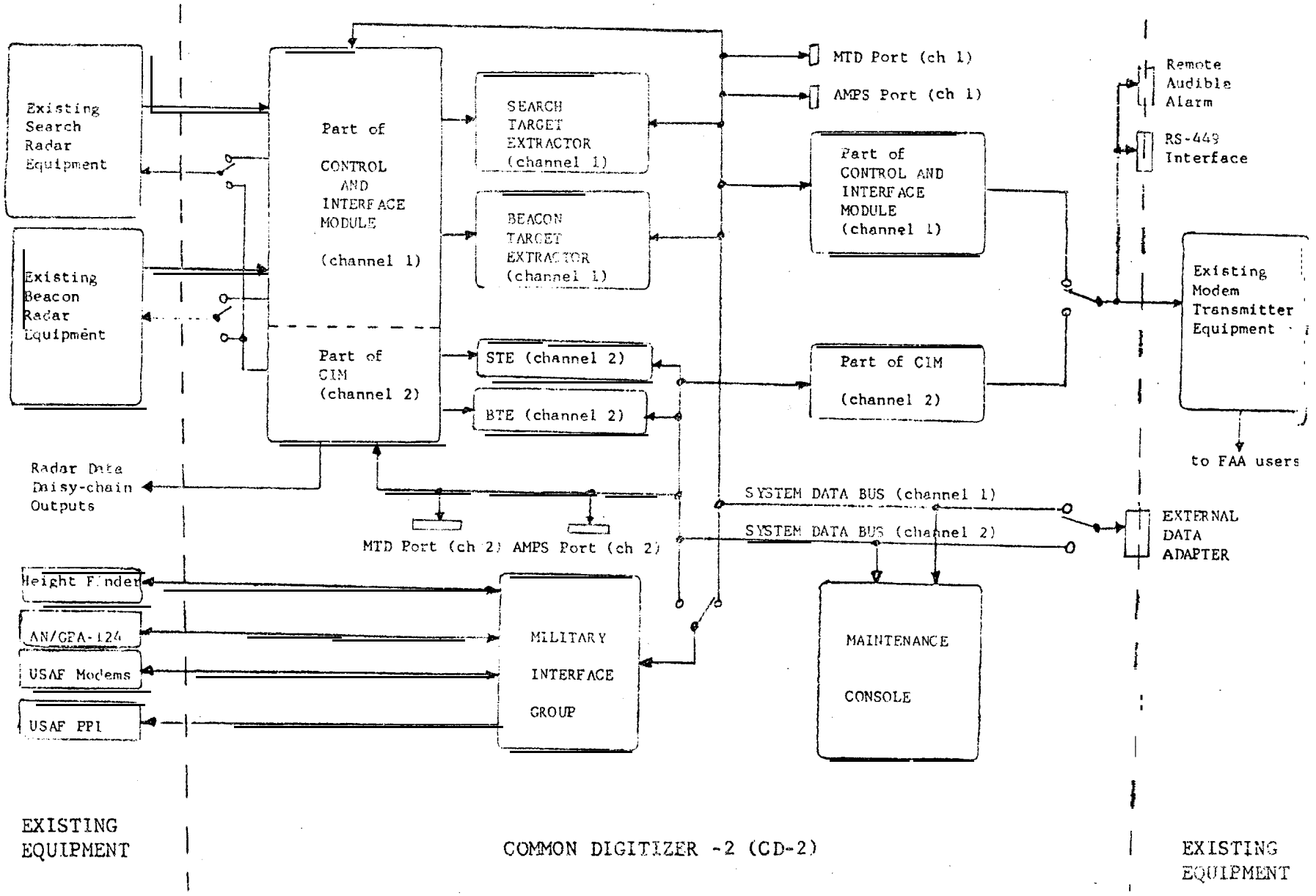

Figure 1. CD-2C Block Diagram of Initial Application

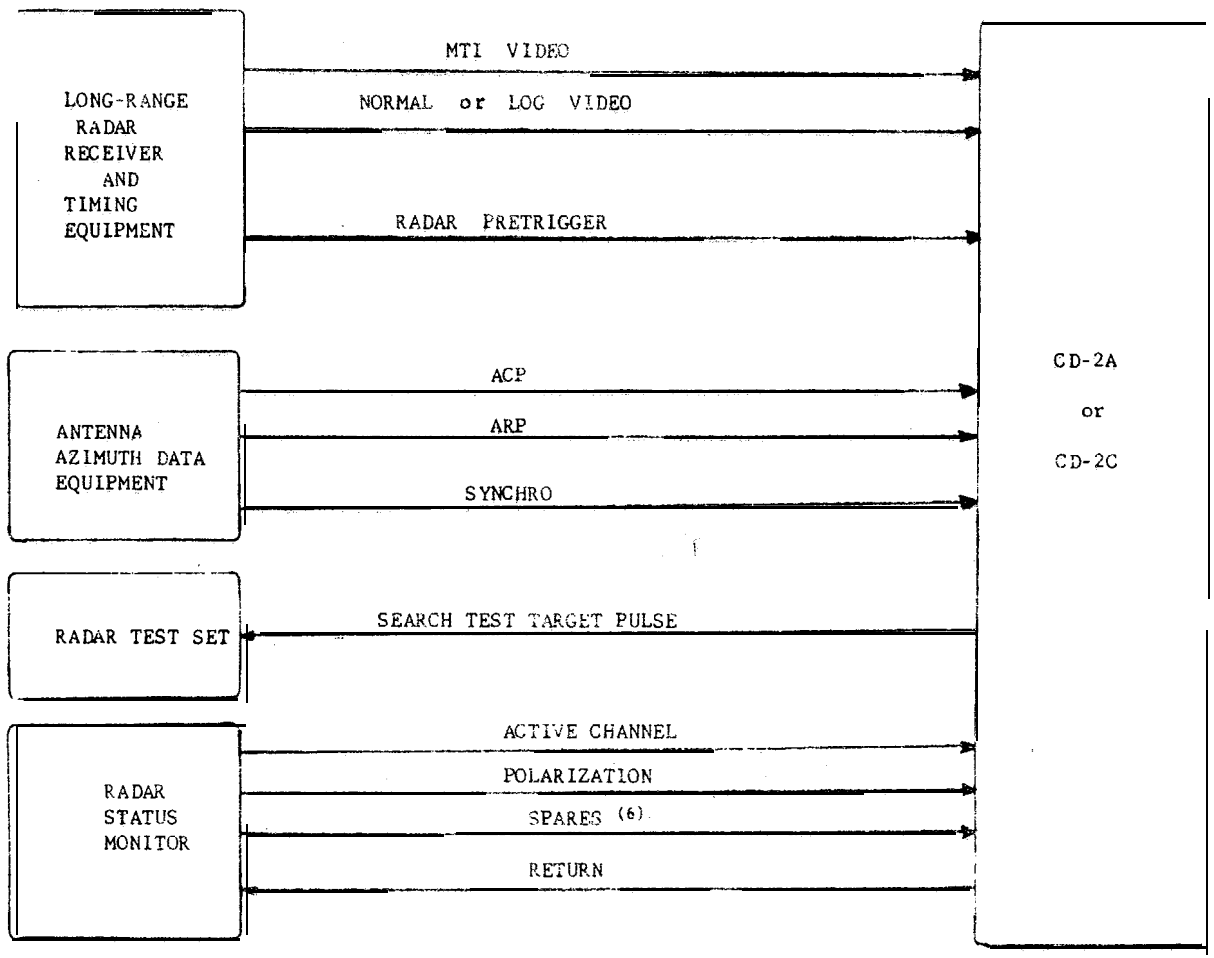

Figure 2. CD-2A and CD-2C Search Radar Interface

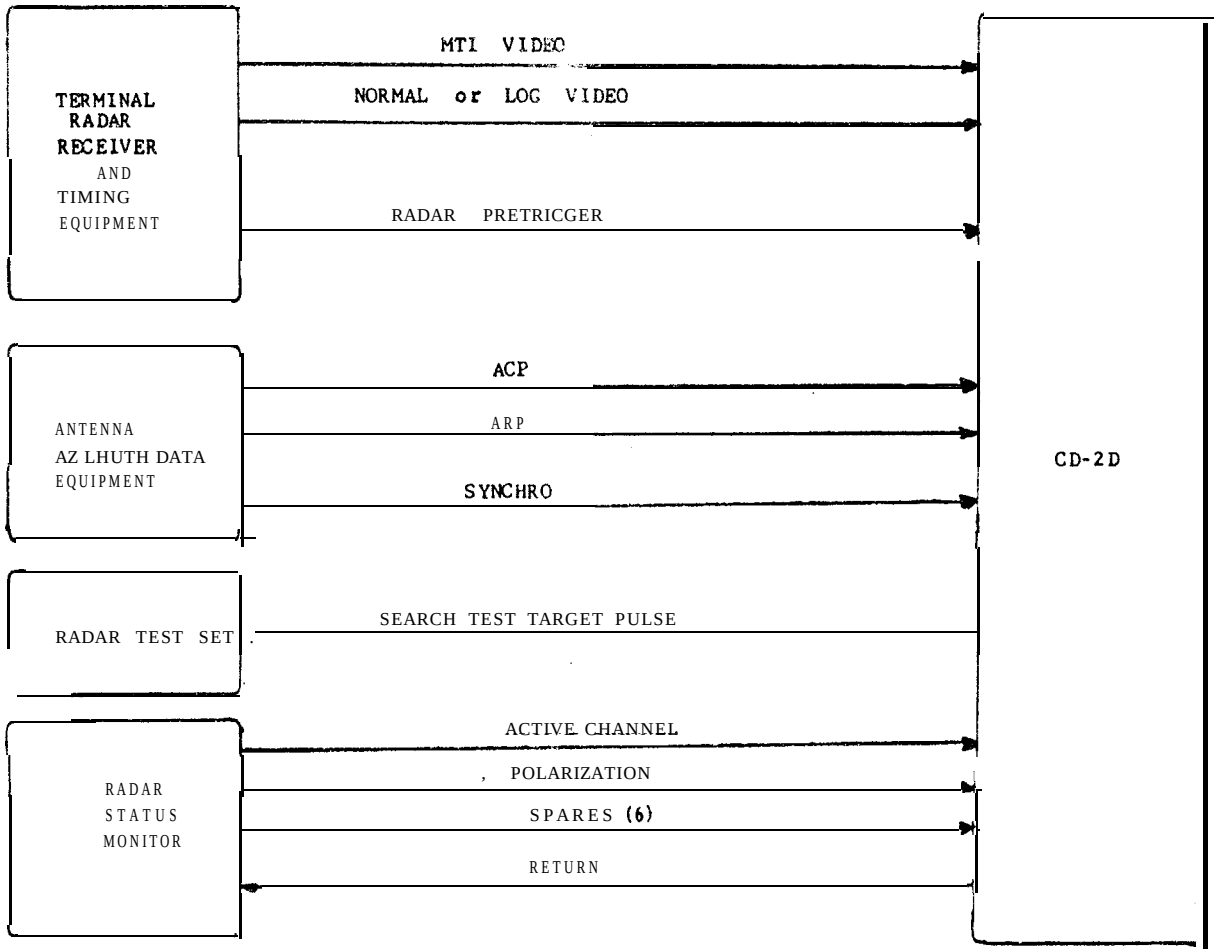

Figure 3. CD-2D Search Radar Interface

2679a

*

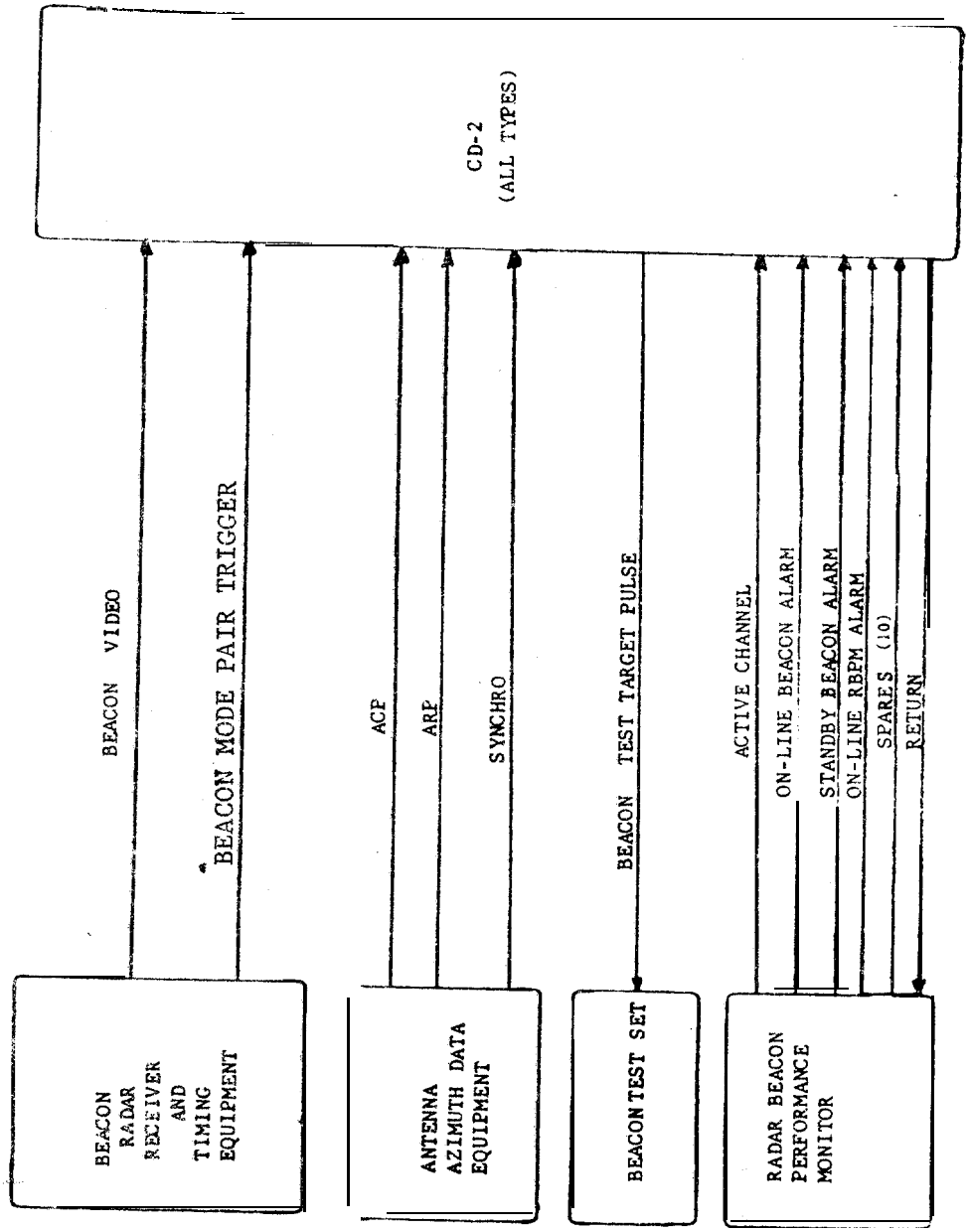

Figure 4. CD-2 Beacon Interface

*

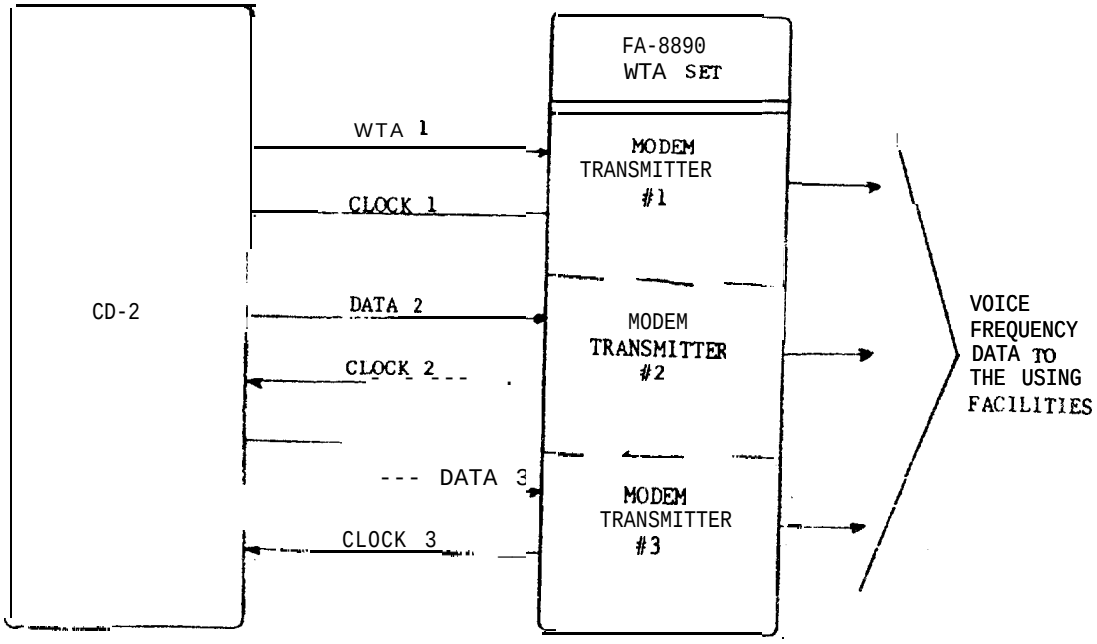

Figure 5a. Interface Signals

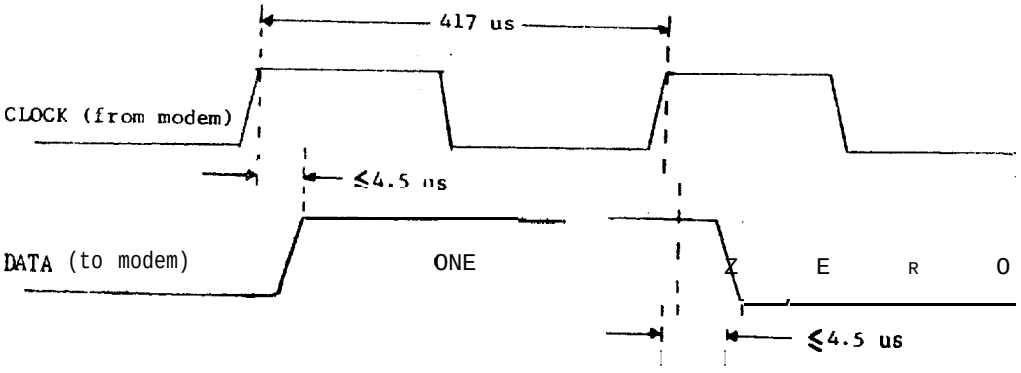

Figure 5b. Data and Clock Timing

Figure 5. CD-2 Modem Interface

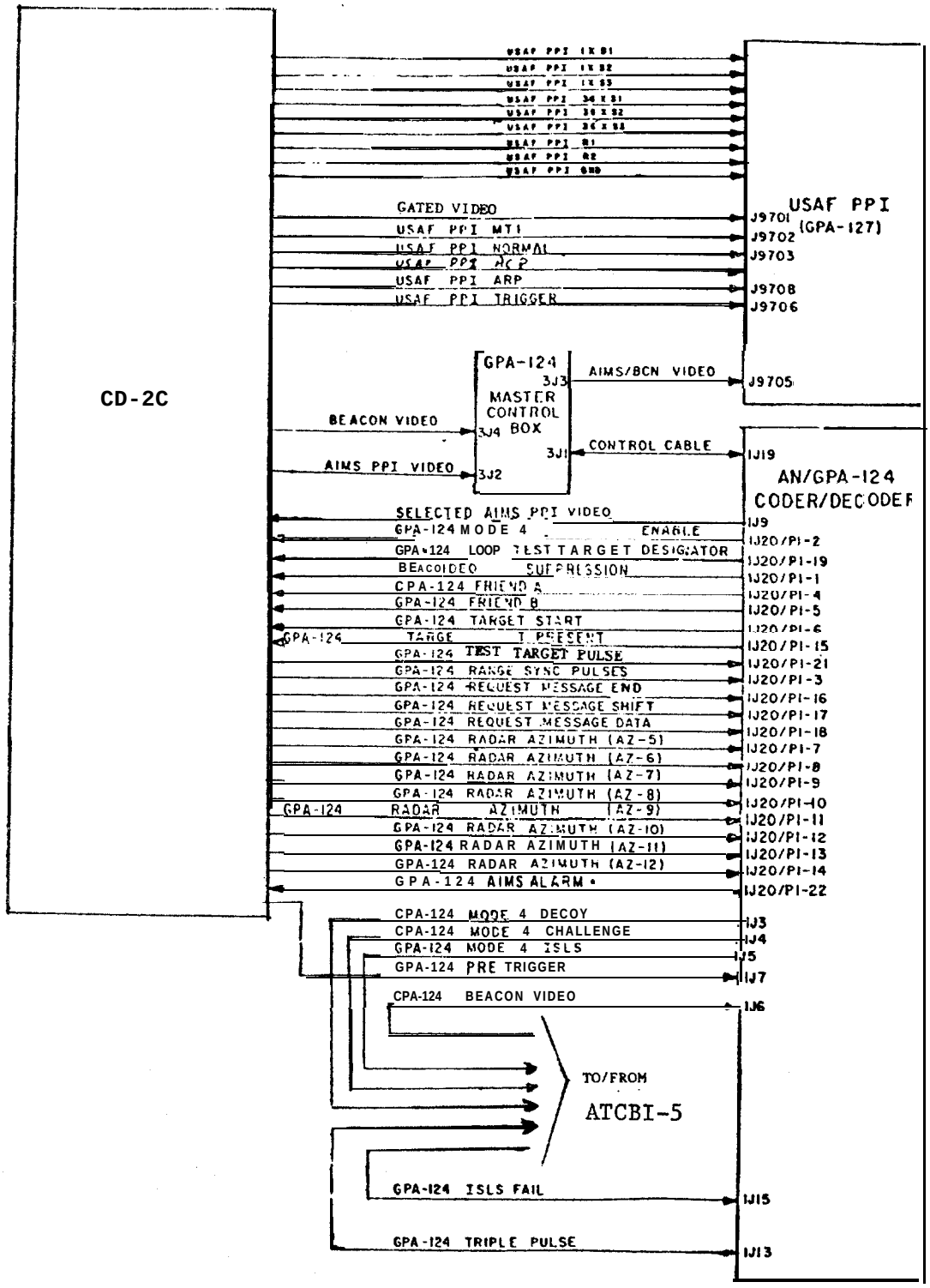

Figure 6a. GPA-124 and USAF PPI

Figure 6. CD-2C Military Equipment Interfaces (Page 1 of 2)

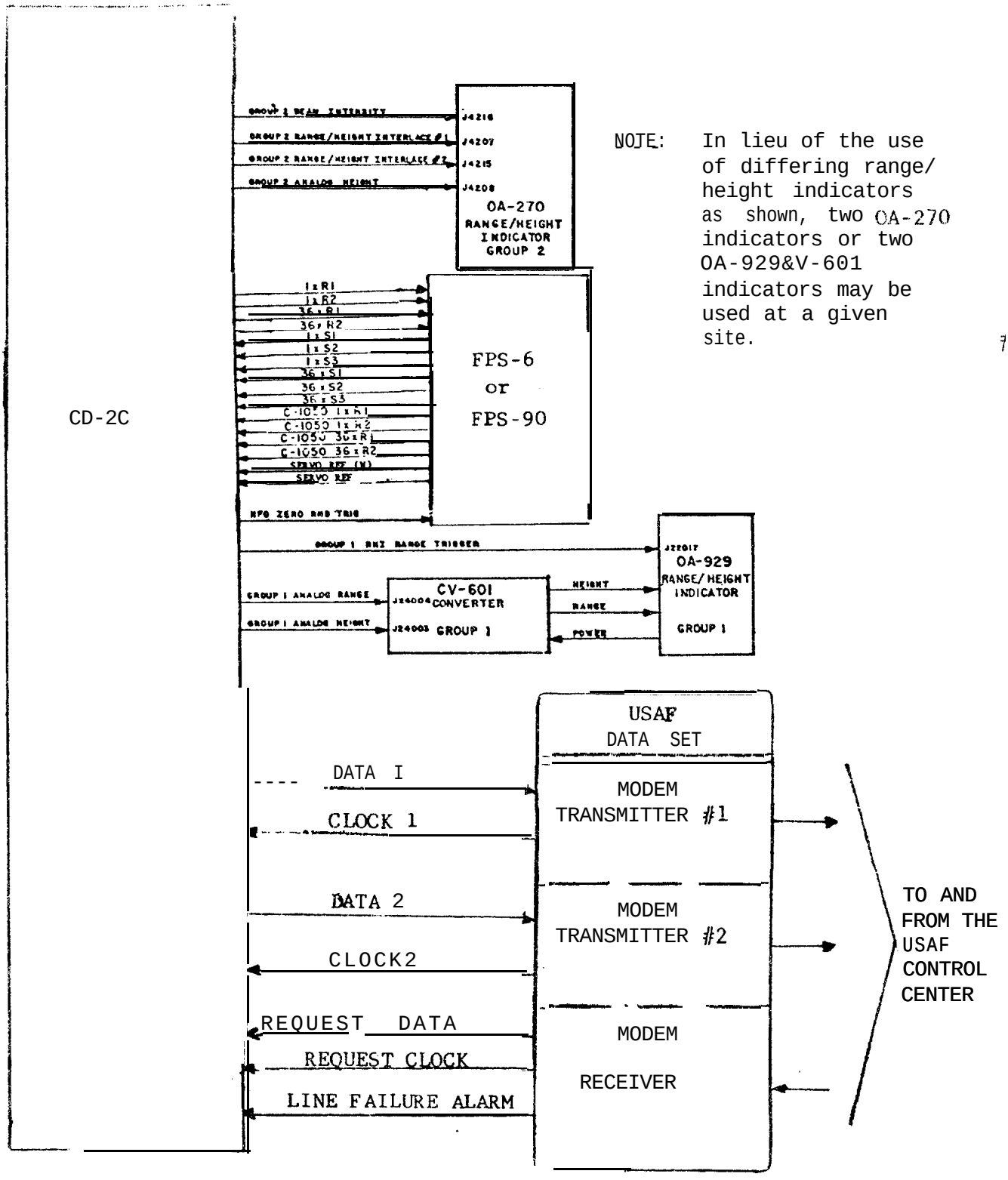

NOTE: In lieu of the use of differing range/height indicators as shown, two OA-270 indicators or two OA-929&V-601 indicators may be used at a given site.

Figure 6b. Height Finder and USAF Data Set

Figure 6. CD-2C Military Equipment Interfaces (Page 2 of 2)

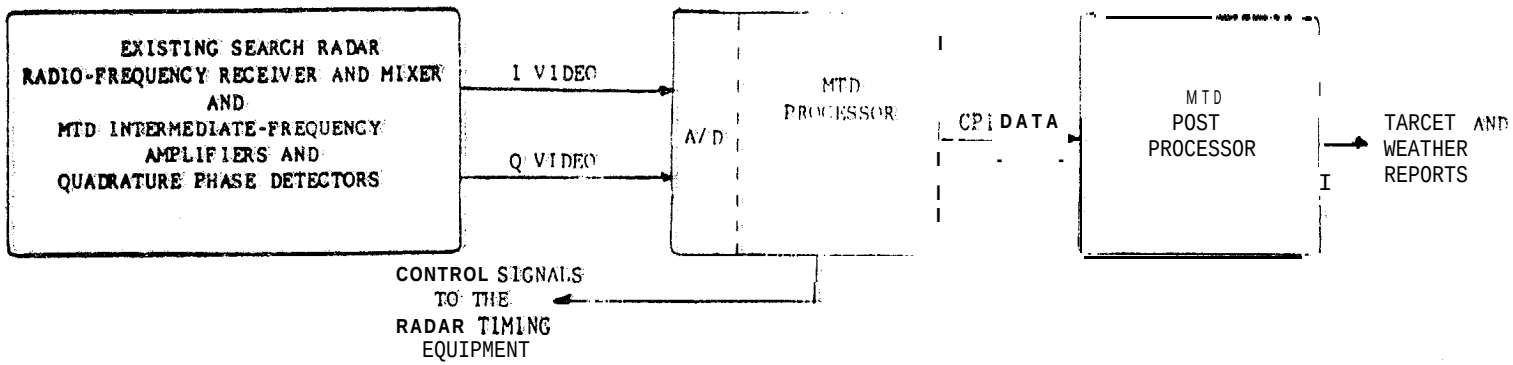

Figure 7a. MTD Block Diagram

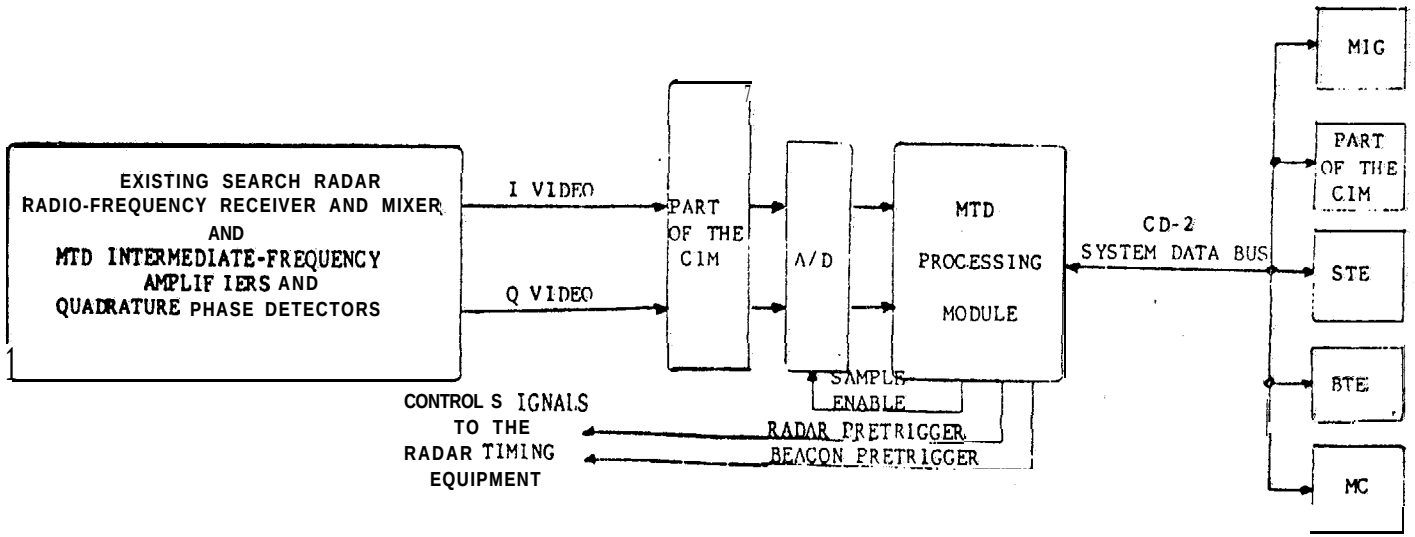

Figure 7b. MTD and CD-2 Interconnections

Figure 7. The Moving Target Detector and the CD-2

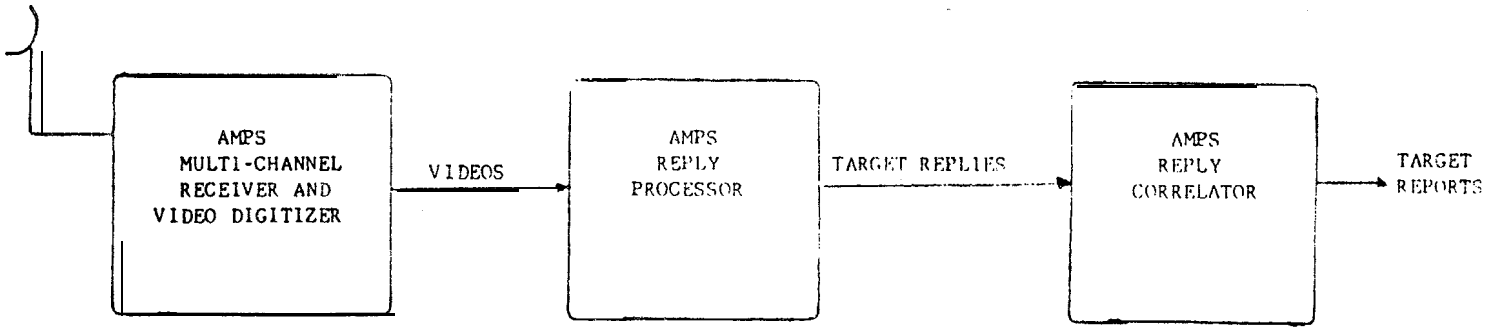

Figure 8a. A Contemplated AMPS Receiver

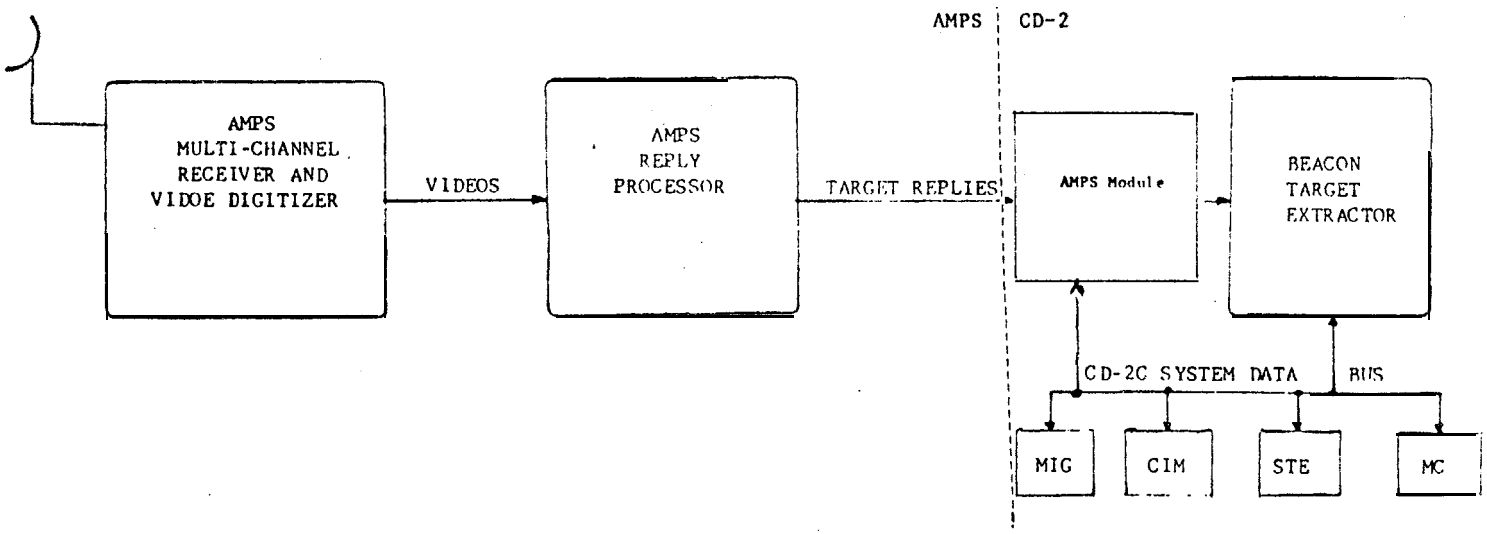

Figure 8b. The CD-2's Interface with the AMPS

Figure 8. ATCRBS Monopulse Processing Subsystem (AMPS) and the CD-2

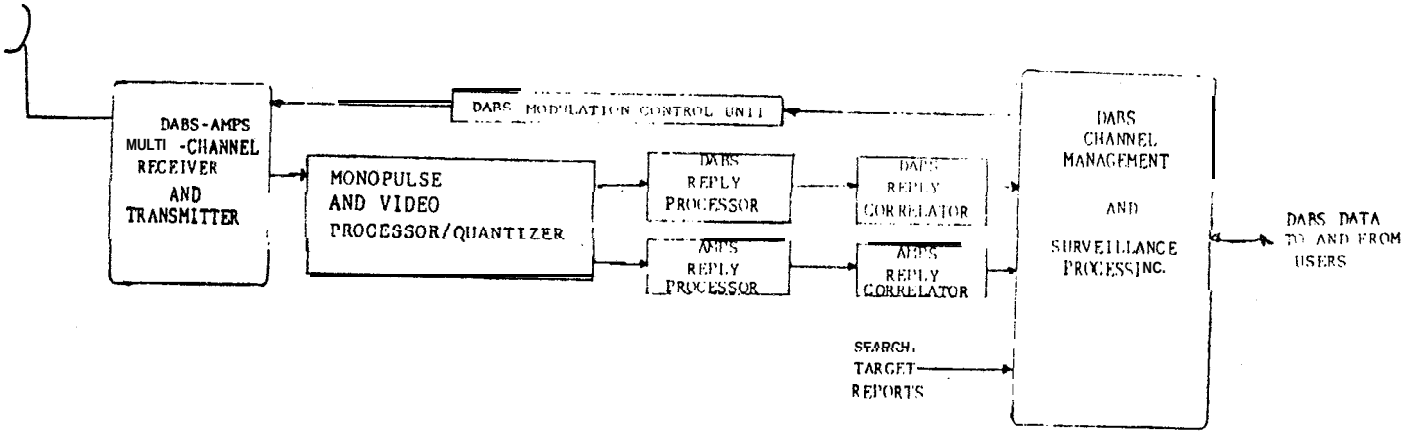

Figure 9a. A Contemplated DABS Configuration

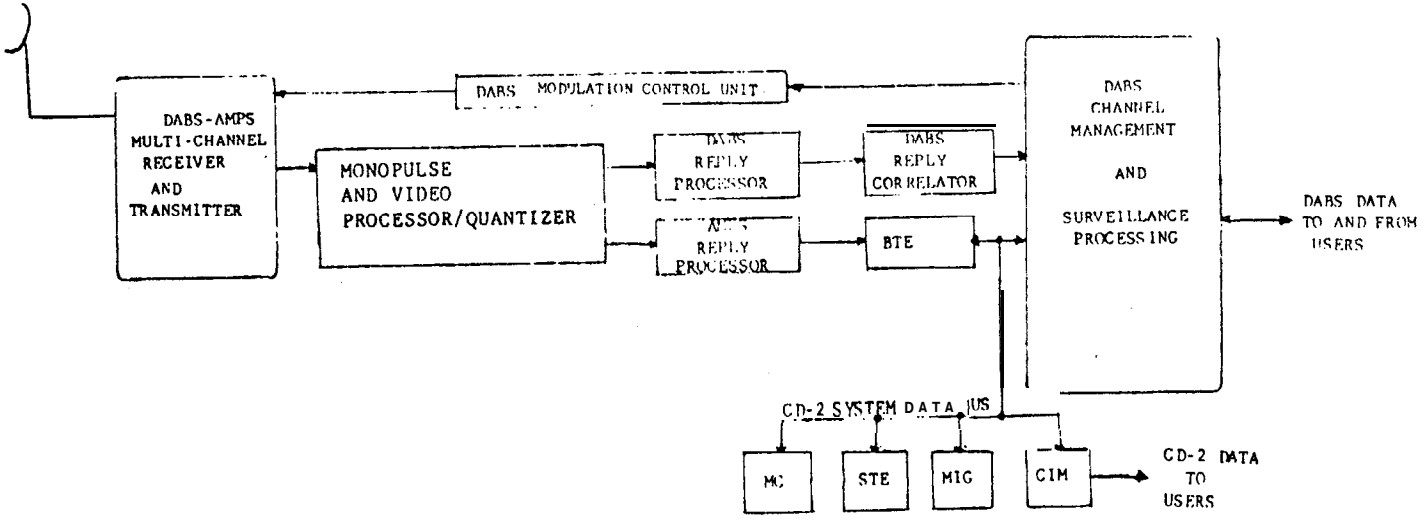

Figure 9b. A Possible CD-2 Connection to DABS

Figure 9. The Discrete Address Beacon System (DABS) and the CD-2

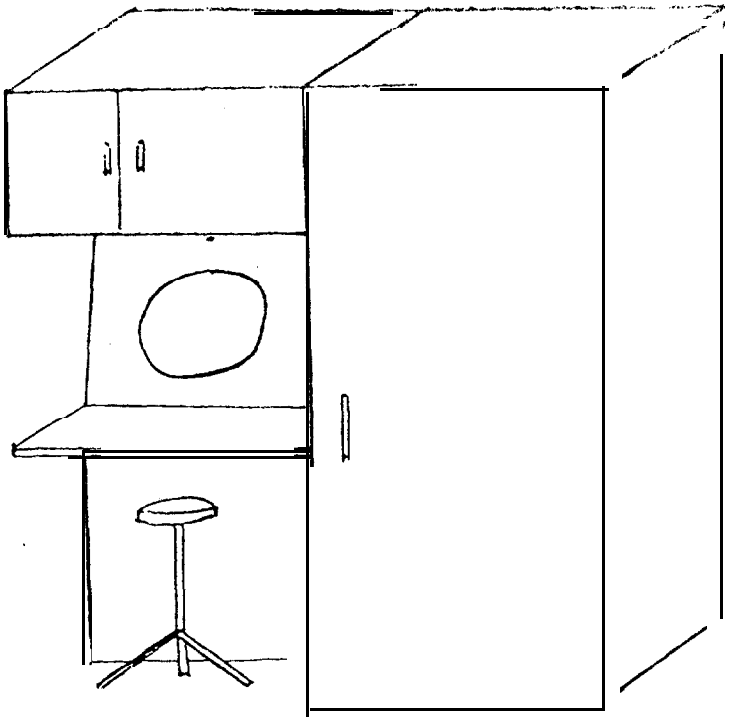

Figure 10a. CD-2B

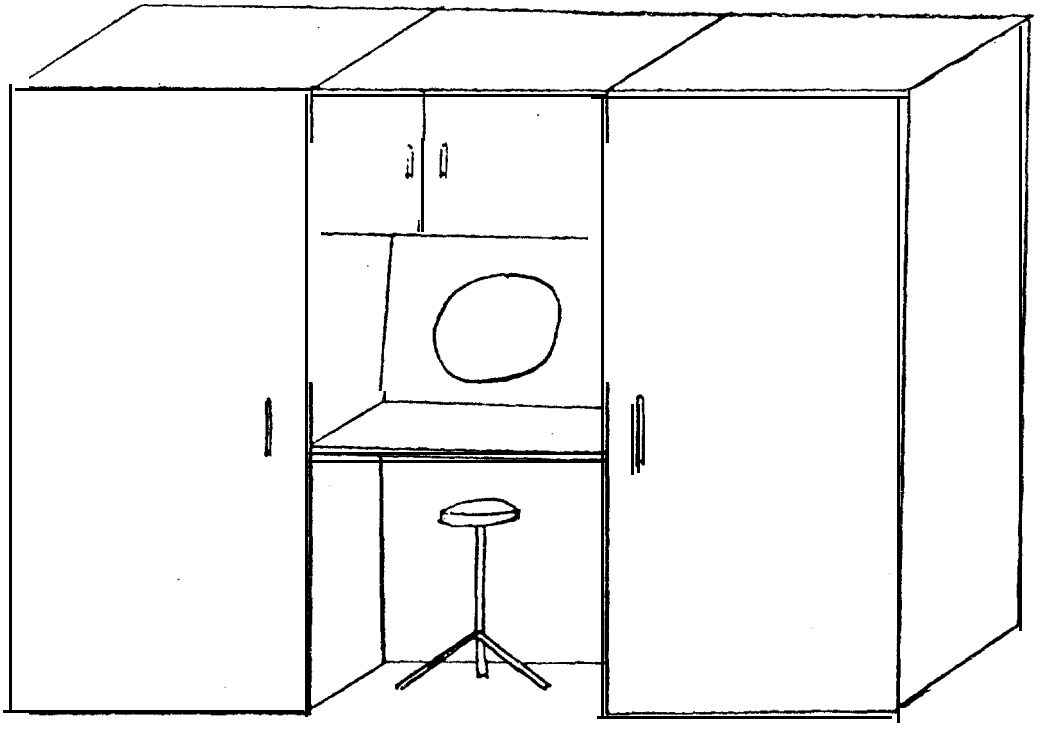

Figure 10b. CD-2A/C/D

Figure 10. A Possible CD-2 Package

(cover removal)

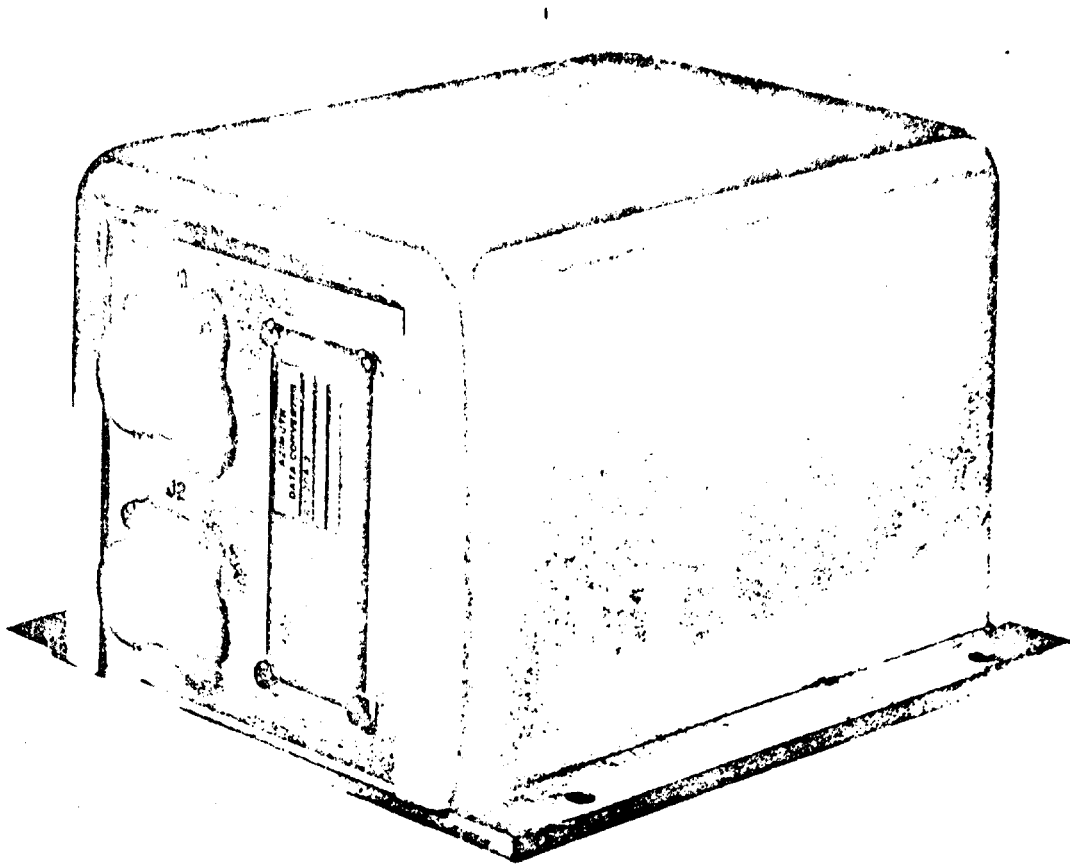

Figure 11. Government-Furnished Azimuth Data Converter

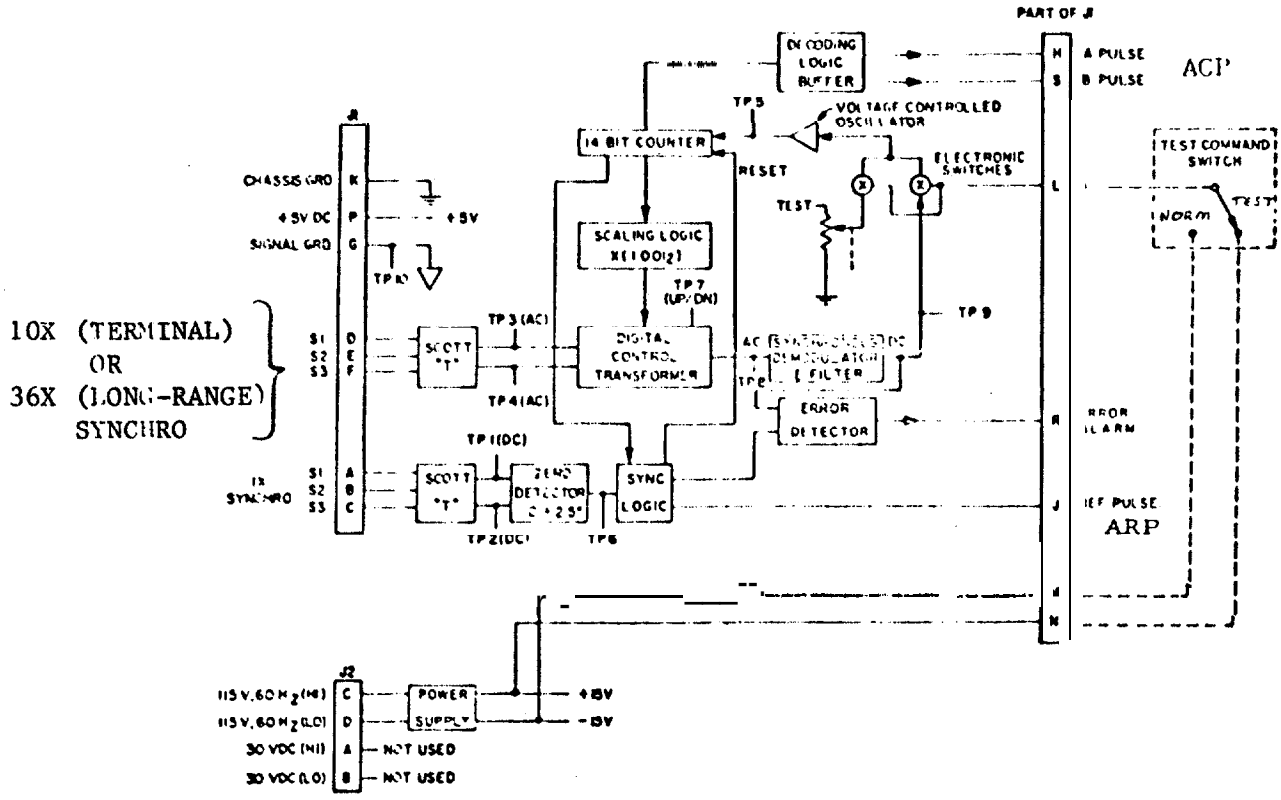

* Figure 12. Azimuth Data Converter Functional Block Diagram

(TOP VIEW)

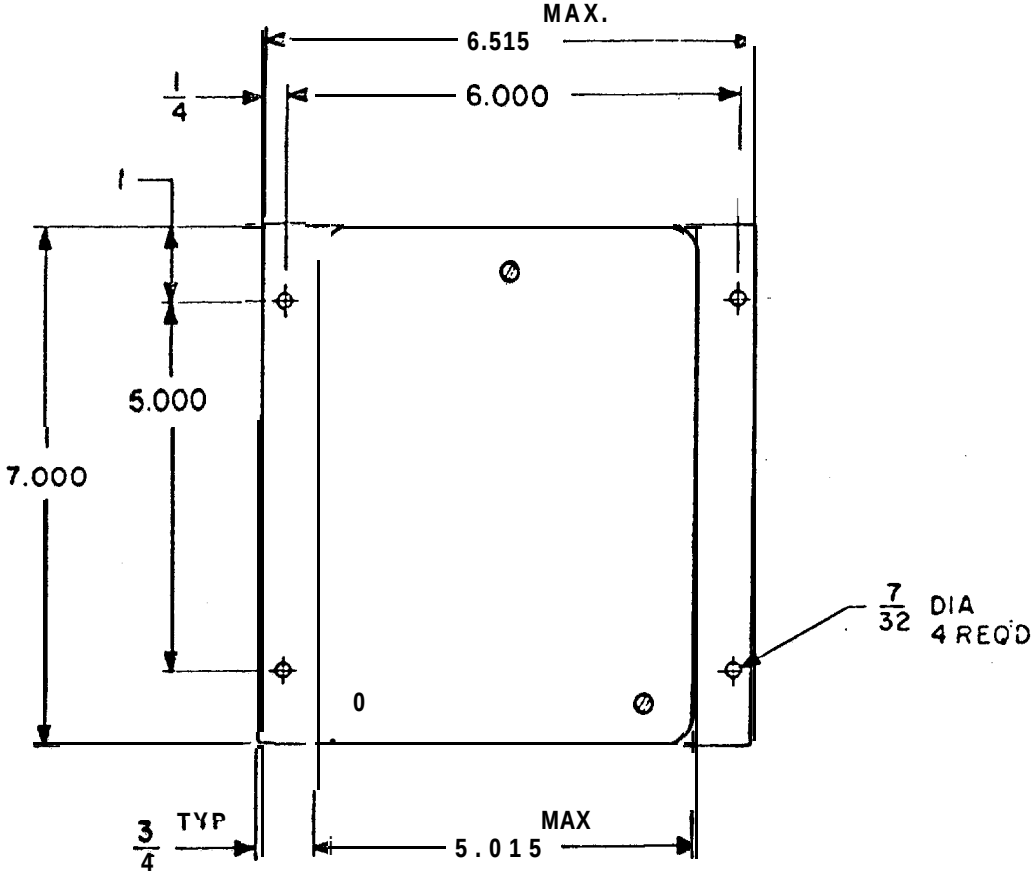

(FRONT VIEW)

NOTE: All dimensions are in inches.

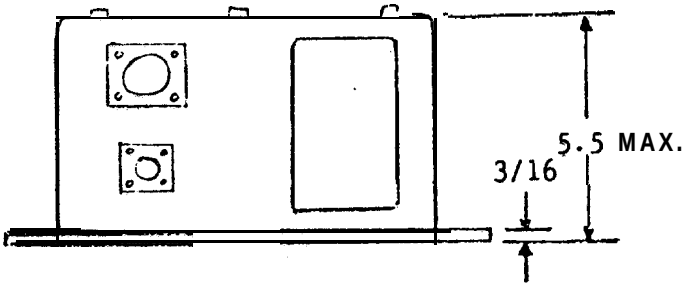

Figure 13, Azimuth Data Converter Mounting Dimensions

SIGNAL INPUTS AND OUTPUTS, J1
(MS3112E14-18P)

PIN	SIGNAL	PIN	SIGNAL
A	ONE-SPEED S1	J	ARP OUTPUT
B	ONE-SPEED; S2	K	CHASSIS
C	ONE-SPEED, S3	L	TEST CONTROL (COMMON)
D	MULTI-SPEED, S1	M	TEST CONTROL (NORMAL)
E	MULTI-SPEED, S2	N	TEST CONTROL (TEST)
F	MULTI-SPEED, S3	P	5 VOLTS DC
G	SIGNAL GROUND	R	ERROR OUTPUT
H	ACP "A" OUTPUT	S	ACP "B" OUTPUT

SIGNAL-POWER INPUTS, J2
(MS3112E14-5P)

PIN	SIGNAL
C	117 VOLTS AC SYNCHRO REFERENCE (HIGH)
D	117 VOLTS AC SYNCHRO REFERENCE (LOW)

Figure 14a. Signal and Power Connections

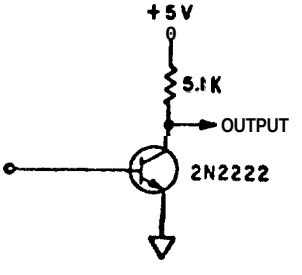

Figure 14b. Output Buffer

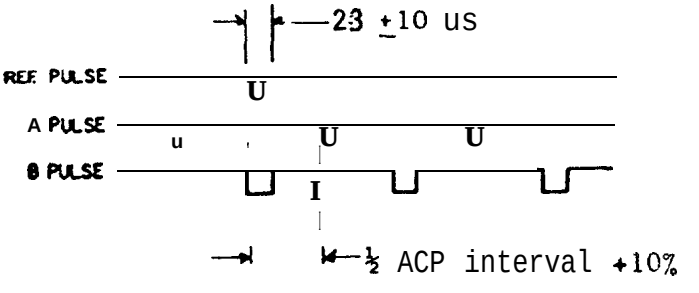

Figure 14c. Output Timing

Figure 14. Azimuth Data Converter Electrical Characteristics

Long-Range Search Radar Equipment (1)

ARSR-1D	AN/FPS-20	AN/FPS-67A
ARSR-1E	AN/FPS-64A	AN/FPS-67B
ARSR-1F	AN/FPS-66A	AN/FPS-87A
ARSR-2	AN/FPS-66A	AN/FPS-91A
		AN/FPS-93

Terminal Search Radar Equipment (2)

ASR-4	ASR-6	ASR-8
ASR-5	ASR-7	

Beacon Radar Equipment (3)

ATCBI-3	ATCBI-4	ATCBI-5	RBPM

FAA Data Transmission Equipment (3)

FAA-8890 2400 Bit-Per-Second Data Set, Types IA, IB, and IC

Militarv Eauiwent (4)

Weight Finder Radar

AN/FPS-6A/OA-270
AN/FPS-90/OA-929/CV-601

USAF Data Transmission Equipment

FA-8890 or Equivalent

Secure Identification Equipment

AN/GPA-124

Plan Position Indicator

AN/GPA-127

Notes

(1) Applicable to CD-2A and CD-2C
(2) Applicable to CD-2D
(3) Applicable to all CD-2 Configurations
(4) Applicable to CD-2C

TABLE I. ASSOCIATED INTERCONNECTING EQUIPMENT

IT NT	MSG BIT NO.	
2	1	BEACON
1	2	RTQC/TEST
0	3	1
9	4	1
8	5	MODE 2
7	6	MODE 3/A
6	7	MODE C
5	8	IDENT
4	9	RADAR REINF
3	10	7700
2	11	7600
1	12	FAA
0	13	AF
		PARITY
2	14	MSB 128 NM
1	15	64
0	16	32
9	17	16
8	18	8
7	19	RANGE (11) 4
6	20	2
5	21	1
4	22	.5
3	23	.25
2	24	LSB .125NM
1	25	SPEC. TGT
0	26	PARITY
2	27	MSB 2048ACP
1	28	1024
0	29	512
9	30	256
8	31	AZIMUTH (12) 128
7	32	64
6	33	32
5	34	16
4	35	8
3	36	4
2	37	2
1	38	LSB 1ACP
0	39	PARITY
2	40	AIMS PRESENT
1	41	MSB AIMS CODE 0
0	42	LSB AIMS CODE 0
9	43	DISCRETE
8	44	MODE 2 "X"
7	45	MODE 3/A "X"
6	46	MSB 4SEC
5	47	2
4	48	TIME IN 1
3	49	STORAGE(4) ½ SEC
2	50	R/L FLAG = 0
1	51	MTI FLAG
0	52	PARITY
2	53	A4
1	54	A2
0	55	A1
9	56	B4
8	57	B2
7	58	MODE 3/A CODE (12) B1
6	59	C4
5	60	C2
4	61	C1
3	62	D4
2	63	D2
1	64	D1
0	65	PARITY
2	66	D4
1	67	C1
0	68	A1
9	69	C2
8	70	MODE 2 CODE (12) A2
7	71	C4
6	72	A4
5	73	B1
4	74	D1
3	75	B2
2	76	D2
1	77	B4
0	78	PARITY
2	79	SIGN:0=+1=-
1	80	102400
0	81	51200
9	82	25600
8	83	12800
7	84	MODE C ALTITUDE (11) 6400
6	85	3200
5	86	1600
4	87	800
3	88	400
2	89	200
1	90	100
0	91	PARITY

BEACON

MSB	64 ACP
BEACON	32
RUNLENGTH	16
REPORTING	8
	4
LSB	2 ACP
MSB	4 SEC
TIME IN	2
STORAGE	1
LSB	½ SEC
R/L FLAG	=1
MTI FLAG	

FLD CNT	BIT CNT	MSG BIT NO.	IDLE
0	12	1	0
	11	2	0
	10	3	0
	9	4	1
	8	5	1
	7	6	1
	6	7	1
	5	8	1
	4	9	1
	3	10	1
	2	11	1
	1	12	1
	0	13	1

IDLE

MSG BIT NO.	SEARCH DATA	FLD CNT	BIT CNT	MSG BIT NO.	SEARCH RTQC DATA
1	TEST	1	12	1	1
2	0		11	2	0
3	0		10	3	0
4	1		9	4	1
5	1		8	5	0
6	0		7	6	0
7	1		6	7	1
8	1		5	8	0
9	0		4	9	0
10	0		3	10	0
11	FAA		2	11	FAA
12	AF		1	12	AF
13	PARITY		0	13	PARITY
14	MSB 128 NM	2	12	14	MSB 128 NM
15	64		11	15	64
16	32		10	16	32
17	16		9	17	16
18	8		8	18	8
19	RANGE 4		7	19	RANGE 4
20	(11) 2		6	20	(1NM) 2
21	1		5	21	1
22	.5		4	22	.5
23	.25		3	23	.25
24	LSB .125NM		2	24	LSB .125NM
25	0		1	25	0
26	PARITY		0	26	PARITY
27	MSB 2048ACP	3	12	27	MSB 2048ACP
28	1024		11	28	1024
29	512		10	29	512
30	2%		9	30	256
31	128		8	31	128
32	64		7	32	64
33	AZIMUTH 32		6	33	AZIMUTH 32
34	(12) 16		5	34	(12) 16
35	8		4	35	8
36	4		3	36	4
37	2		2	37	2
38	LSB 1ACP		1	38	LSB 1ACP
39	PARITY		0	39	PARITY
40	AIMS PRESENT	4	12	40	MSB 256ACP
41	8		11	41	128
42	8		10	42	64
43	MSB 16ACP		9	43	RUN LENGTH 32
44	RUN LENGTH 8		8	44	(7) 16
45	LSB (3) 4ACP		7	45	8
46	MSB 4SEC		6	46	LSB 4ACP
47	2		5	47	MSB 2SEC
48	TIME IN 1		4	48	TIME IN 1
49	STORAGE .5		3	49	STORAGE .5
50	LSB (5) .25		2	50	(5) .25
51	MTI FLAG		1	51	LSB .125
52	PARITY		0	52	PARITY

SEARCH SEARCH RTQC

Negatiye Mode C altitudes shall be reported in two's complement with bit 79 set.

Table II. Common Output Message Formats (Page 1 of 2)

FLD CNT	BIT CNT	MSG BIT NO.	STATUS
1	12	1	TEST
	11	2	0
	10	3	0
	9	4	0
	8	5	1
	7	6	1
	6	7	0
	5	8	0
	4	9	0
	3	10	0
	2	11	FAA
	1	12	AF
	0	13	PARITY
2	12	14	RADAR CHANNEL (1 = A)
	11	15	BEACON CHANNEL (1 = A)
	10	16	CD ALARM
	9	17	ON-LINE BEACON ALARM
	8	18	BEACON OFFSET ON
	7	19	AIMS ALARM
	6	20	POLARIZATION (1 = CP)
	5	21	STANDBY BEACON ALARM
	4	22	ON-LINE RBPM ALARM
	3	23	OUTPUT SERVICE ALARM
	2	24	MT ALARM
	1	25	OVERHEAT ALARM
	0	26	PARITY
3	12	27	MILITARY TIMING ALARM
	11	28	MIC ALARM
	10	29	BEACON RTQC ALARM
	9	30	SEARCH RTQC ALARM
	8	31	RANGE ALARM
	7	32	0
	6	33	0
	5	34	SEARCH MAX RLD ON
	4	35	SEARCH MIN RLD ON
	3	36	AZIMUTH ALARM
	2	37	USAF MAP ON
	1	38	0
	0	39	PARITY
4	12	40	WEATHER ON
	11	41	WEATHER ALARM
	10	42	0
	9	43	FAA MODEM ALARM
	8	44	HALF-SCAN-INHIBIT ALARM
	7	45	BUFFER OVERLOAD ALARM
	6	46	0
	5	47	0
	4	48	0
	3	49	FAA CHANNEL #3 ON
	2	50	FAA CHANNEL #2 ON
	1	51	FAA CHANNEL #1 ON
	0	52	PARITY

STATUS

FLD CNT	BIT CNT	MSG BIT NO.	MAP	STROBE
1	12	1	TEST	TEST
	11	2	0	0
	10	3	0	0
	9	4	0	1
	8	5	0	1
	7	6	0	0
	6	7	0	0
	5	8	1 HEAVY WEATHER / 1 LIGHT WEATHER	0
	4	9	0 HEAVY WEATHER / 1 LIGHT WEATHER	0 SCH / 1 BCN / 1 NOT USED
	3	10	1 HEAVY WEATHER / 0 LIGHT WEATHER	1 SCH / 0 BCN / 1 NOT USED
	2	11	FAA	FAA
	1	12	AF	AF
	0	13	PARITY	PARITY
2	12	14	MSB 128 NM	MSB 128 NM
	11	15	64	64
	10	16	32	32
	9	17	16	16
	8	18	RANGE START 8	8
	7	19	(10) 4	RANGE (11) 4
	6	20	2	2
	5	21	1	1
	4	22	.5	.5
	3	23	.25NM	.25
	2	24	0	LSB 0.125NM
	1	25	0	0
	0	26	PARITY	PARITY
3	12	27	MSB 2048ACP	MSB 2048ACP
	11	28	1024	1024
	10	29	512	512
	9	30	256	256
	8	31	128	128
	7	32	AZIMUTH 64	AZIMUTH 64
	6	33	(12) 32	(12) 32
	5	34	16	16
	4	35	8	8
	3	36	4	4
	2	37	2	2
	1	38	LSB 1	LSB 1
	0	39	PARITY	PARITY
4	12	40	MSB 128NM	MSB 256ACP
	11	41	64	128
	10	42	32	64
	9	43	16	RUN LENGTH(7) 32
	8	44	8	16
	7	45	RANGE STOP 4	8
	6	46	(10) 2	LSB 4ACP
	5	47	1	MSB 2SEC
	4	48	½	1
	3	49	¼	TIME IN .5
	2	50	0	STORAGE (5) .25
	1	51	0	LSB 1/8SEC
	0	52	PARITY	PARITY

MAP STROBE

Table II. Common Output Message Formats (Page 2 of 2)

Signal Name	Amplitude	Baseline	Pulsewidth	Rise Time	Fall Time	Impedance
Mode 4 Enable	+3 to +5V	-0.5 to +0.5V	level			85 to 96 ohms
Loop Tee t Target Deeignator	+3 to +5V	-0.5 to +0.5V	0.4 to 0.7 us	0.1 us max	0.1 us max	85 to 96 ohms
Beacon Video Suppression	+3 to +5V	-0.5 to +0.5V	2 to 100 us	0.5 us max	1.0 us max	85 to 96 ohms
Friend A	+3 to +5V	-0.5 to +0.5V	0.4 to 0.7 us	0.1 us max	0.1 us max	85 to 96 ohms
Friend B	+3 to +5V	-0.5 to +0.5V	0.4 to 0.7 us	0.1 us max	0.1 us max	85 to 96 ohms
Target Start	+3 to +5V	-0.5 to +0.5V	0.4 to 0.7 us	0.1 us max	0.1 us max	85 to 96 ohms
Target Present	+3 to +5V	-0.5 to +0.5V	0.4 to 0.7 us	0.1 us max	0.1 us max	85 to 96 ohms
Selected AIMS PPI Video	0 to +5V adjustable	-0.5 to +0.5V	0.4 to 0.7 us	0.1 us max	0.1 us max	70 to 80 ohms
AIMS Alarm	+3 to +5V	-0.5 to +0.5V	level	0.5 us max	0.5 us max	900 to 1100 ohms

Table IIIa. CPA-124 Output to the CD-2C

AIMS Test Target Pulse	+20 to +40V	-0.5 to +0.5V	2.5 to 3.5 us	0.2 us max	0.4 us max	70 to 80 ohms
Range Sync Pulses	+3 to +5V	-0.5 to +0.5V	0.3 to 0.7 us	0.1 us max	0.1 us max	85 to 96 ohms
Requert Message Shift	+3 to +5V	-0.5 to +0.5V	20 to 200 us	0.1 us max	0.5 us max	85 to 96 ohms
Request Message Data	+3 to +5V	-0.5 to +0.5V	20 to 200 us	0.1 us max	0.5 us max	85 to 96 ohm
Request Message End	+3 to +5V	-0.5 to +0.5V	20 to 200 us	0.1 us max	0.5 us max	85 to 96 ohms
Azimuth Counts (8 liner)	+3 to +5V	-0.5 to +0.5V	level	0.2 us max	0.2 us max	85 to 96 ohms
CPA-124 Pretrigger	+15 to +50V	-1.0 to +1.0V	0.3 to 1.0 us	0.2 us max	0.5 us max	75 to 1000 ohms

Table IIIb. CD-2C Output to CPA-124

TABLE III. SPA-124 INTERFACE SIGNAL CNARACTERXSTICS

Transfer Message Bit Number	Bit Name	Bit Position in Phone Line Message
1	Busy	*
2	RS	16
# 3	ST8	19
4	SP8	20
5	ST7	24
6	SP7	25
7	ST6	29
8	SP6	30
9	ST5	34
10	SP5	35
11	ST4	39
12	SP4	40
13	ST3	44
14	SP3	4 5
15	ST2	49
16	SP2	50 #
17	T	51
# 18	ST1	54
19	SP1	55
20	NR 4	56
21	NR 3	61
22	NR2	66
23	NR 1	71 #
24	Parity	*

* These bits shall be generated by the CD-2C; the busy bit shall always be present, and the parity bit shall be set when the message parity checks. The other data bits shall be set when a logical "one" occurs at the specified position of the phone line message.

Table IV. GPA-124 REQUEST MESSAGE CONTENTS

SIGNAL	SIGNAL TYPE AND'AMPLITUDE	BASELINE	PULSE WIDTH	RISE TIME	FALL TIME
(1) Beam Intensity	zero to +90 V, positive pulse	-0.5 to +0.5 v	1.6 to 2.4 us, or one sweep	0.2 us, max	0.3 us, max
(2) Range-height Interlace #1	+27 to t33 V, positive pulse	-0.5 to +0.5 V	one sweep	0.3 us, max	0.9 us, max
(2) Range-height Interlace #2	-0.5 to +0.5 V negative pulse	+27 to +33 v	one sweep	0.3 us, max	0.9 up, max
Analog Height	0.0 to +30 V, level	--	--	--	--
Analog Range	0.0 to -56 V, level	--	--	--	--
Range Trigger	+30 V (min), positive pulse	-0.5 to +0.5 v	1.6 to 2.4 us	0.3 us, max	0.3 us, max

NOTES:

(1) The OA-270 range line display pulse (narrow pulse width) shall be generated once each sweep for 15 sweeps; the height line (wide pulse width) shall be generated once every 16 sweeps. During the-15 non-height sweeps, the beam intensity's baseline shall be at zero volts as specified above, and the range line display pulse (2 us wide) shall vary from zero to +90 volts under control of the CD-2C message console's range line intensity control, During the height display sweep, the height display pulse shall vary from zero to +30 volts under control of the CD-2C message console's height line intensity control.

(2) The range-height interlace signals shall be at their respective baseline levels during the 15 non-height sweeps. During the height sweep, the interlace pulses shall be coincident (withfn 0.5 us) with the beam intensity height line display pulse.

Table V. Range-Height Indicator Interface Signal Characteristics

FLD CNT	BIT CNT	MSG BIT NO.	AIMS		MAP	
1	12	1	TEST		TEST	
	11	2	0		0	
	10	3	0		0	
	9	4	0		0	
	8	5	1		0	
	7	6	0		0	
	6	7	1		0	
	5	8	0		0 USAF	
	4	9	0		1 MAP	
	3	10	0		0	
	2	11	FAA		FAA	
	1	12	AF		AF	
	0	13	PARITY		PARITY	
2	12	14	MSB	128 NM	MSB	128 NM
	11	15		64		64
	10	16		32		32
	9	17		16		16
	8	18	RANGE	8	RANGE START	8
	7	19	(11)	4	(10)	4
	6	20		2		2
	5	21		1		1
	4	22		.5		.5
	3	23		.25		.25NM
	2	24	LSB	.125NM	0	
	1	25	0		0	
	0	26	PARITY		PARITY	
3	12	27	MSB	2048ACP	MSB	2048ACP
	11	28		1024		1024
	10	29		512		512
	9	30		256		256
	8	31		128		128
	7	32	AZIMUTH	64	AZIMUTH	64
	6	33	(12)	32	(12)	32
	5	34		16		16
	4	35		8		8
	3	36		4		4
	2	37		2		2
	1	38	LSB	1ACP	LSB	1
	0	39	PARITY		PARITY	
4	12	40	1		MSB	128NM
	11	41	MSB AIMS CODE			64
	10	42	LSB AIMS CODE			32
	9	43	0			16
	8	44	0			8
	7	45	0		RANGE STOP	4
	6	46	MSB	4SEC	(10)	2
	5	47		2		1
	4	48	TIME IN	1		½
	3	49	STORAGE (6)	.5		¼
	2	50		.25	0	
	1	51	LSB	1/8SEC	0	
	0	52	PARITY		PARITY	

AIMS ONLY USAF MAP

FLD CNT	BIT CNT	MSG BIT NO.	HEIGHT
1	12	1	TEST
	11	2	0
	10	3	0
	9	4	1
	8	5	1
	7	6	1
	6	7	1
	5	8	0
	4	9	0
	3	10	0
	2	11	FAA
	1	12	AF
	0	13	PARITY
2	12	14	0
	11	15	0
	10	16	0
	9	17	0
	8	18	0
	7	19	AZ SLEW RIGHT
	6	20	AZ SLEW LEFT
	5	21	0
	4	22	0
	3	23	1
	2	24	0
	1	25	0
	0	26	PARITY
3	12	27	MSB 51,200 FT
	11	28	25,600
	10	29	12,800
	9	30	HEIGHT 6,400
	8	31	(8) 3,200
	7	32	1,600
	6	33	800
	5	34	LSB 400 FT
	4	35	0
	3	36	MSB 4
	2	37	REQUEST NO.(3) 2
	1	38	LSB 1
	0	39	PARITY
4	12	40	0
	11	41	0
	10	42	0
	9	43	0
	8	44	0
	7	45	0
	6	46	0
	5	47	0
	4	48	0
	3	49	0
	2	50	0
	1	51	0
	0	52	PARITY
5	12	53	0
	11	54	0
	10	55	0
	9	56	0
	8	57	0
	7	58	0
	6	59	0
	5	60	0
	4	61	0
	3	62	0
	2	63	0
	1	64	0
	0	65	PARITY
6	12	66	0
	11	67	0
	10	68	0
	9	69	0
	8	70	0
	7	71	0
	6	72	0
	5	73	0
	4	74	0
	3	75	0
	2	76	0
	1	77	0
	0	78	PARITY
7	12	79	0
	11	80	0
	10	81	0
	9	82	0
	8	83	0
	7	84	0
	6	85	0
	5	86	0
	4	87	0
	3	88	0
	2	89	0
	1	90	0
	0	91	PARITY

HEIGHT

Table VI. Unique USAF Output Message Formats

COLUMN

ROW	1	2	3	4	5	6	7	8	9	10	11	12	13	14	15	16	17	18	19
1	0	A_3	ID	X±	X9	X8	X7	X6	X5	X4	X3	X2	X1	0	0	P	O	0	0
2	1	A_2	0	0	0	0	0	PI	LS	S4	S3	S2	S1	0	0	P	0	0	
3	1	A_1	0	0	0	0	0	0	0	0	0	0	0	0	0	P	0	0	
4	A,	HF	H7	H6	H5	H4	H3	H2	H1	R3	R2	R1	0	0	P	0	0	0	
5	A',	0	Y±	Y9	Y8	Y7	Y6	Y5	Y4	Y3	Y2	Y1	0	0	P	0	0	0	

Table VIIa. Height Finder Request Message

COLUMN

ROW	1	2	3	4	5	6	7	8	9	10	11	12	13	14	15	16	17	18	19
1	0	A_3	ID	RS	0	0	0	0	0	0	T	NR4	NR3	NR2	NR1	P	0	0	0
2	1	A_2	0	0	0	0	0	0	0	0	0	0	0	0	0	P	0	0	
3	1	A_1	0	0	0	0	0	0	0	0	0	0	0	0	0	P	0	0	
4	A_5	0	0	ST8	ST7	ST6	ST5	ST4	ST3	ST2	ST1	0	0	0	P	0	0	0	
5	A_4	0	0	SP8	SP7	SP6	SP5	SP4	SP3	SP2	SP1	0	0	0	P	0	0	0	

Table VIIb. AIMS Identification Request Message

SYMBOL	MEANING
A	SITE ADDRESS
HF	HEIGHT FINDER DESIGNATOR (= 0)
ID	MESSAGE IDENTIFIER (0 = HEIGHT FINDER; 1 = AIMS)
H	OLD HEIGHT
X	X COORDINATE
Y	Y COORDINATE
±	SIGN BIT (SEE NOTE # 3)
$\bar{P}$	PARITY (EVEN)

SYMBOL	MEANING
PI	PRIORITY INDICATOR (See Note 4)
LS	LONG-SHORT INDICATOR (See Note 4)
S	TASK ASSIGNMENT
R	REQUEST NUMBER
NR	NUMBER OF REVOLUTIONS
ST	START AZIMUTH
SP	STOP AZIMUTH
RS	RADAR SCAN
T	LOOP TEST

NOTES:

(1) The 91 bits in the message will be received in columnar order, beginning with column 1, row 1 through row 5; column 2, row 1 through row 5. and so on through column 19.

(2) The postscripts of "1" denote the least significant bits of the indicated words-

(3) The following conventions apply to the X and Y sign coordinate values:

(a)

Sign Bit	Sign
0	Positive
1	Negative

(b) Negative values are transmitted in ones complement form.

(c)

Sign Convention	Antenna Azimuth
0 X = 0	0°
+X, Y = 0	90°
-Y, X = 0	180°
-X, Y = 0	270°

(4) The PI and LB bits are not applicable to the CD-2C and may be ignored.

Table VIIc. Request Message Contents

Table VII. Military Request Message Formats

MESSAGE BIT NUMBER	MEANING	CONDITION WHICH SETS THE BIT
14	Selected radar channel	An open circuit on the appropriate • tatum line from the search radar
15	Selected beacon channel	An open circuit on the appropriate status line from the beacon radar
16	CD-2 processing alarm	An internal processing error in any online CD-2 module except the MIG
17	Online beacon alarm	A closed circuit on the appropriate status line from the beacon radar
18	Beacon offset	Enabling of the 1/2 nmi beacon offset feature in the online BTE
19	AIMS alarm	The CPA-124 alarm
20	Circular polarization	A closed circuit on the appropriate status line from the search radar
21	Standby beacon alarm	A closed circuit on the appropriate status line from the beacon radar
22	Online RBPM alarm	A closed circuit on the appropriate status line from the beacon radar
23	Output service alarm	The CIM's output service alarm
24	HT alarm	Either the request line parity alarm or the request line failure in the MIG
25	CD-2 overheat alarm	Any overheated CD-2 module or cabinet
27	Military timing alarm	Either the Military output service alarm or the Military modem alarm
28	MIG alarm	AIMS azimuth. range or pretrigger alarms; MIG buffer overload alarm; or MIG half-scan inhibit alarm
29	Beacon RTQC alarm	Any out-of-tolerance condition for the beacon RTQC target
30	Search RTQC alarm	Any out-of-tolerance condition for the search RTQC target
31	Range alarm	A BRC or STE range word generator alarm
32	Not assigned	None
33	Not ● sdigmed	None
34	Search maximum RLD	gnabling of the run length discrimination feature in the STC
3s	Search minimum RLD	gnabling of the run length discrimination feature in the STE
36	Azimuth/synchro alarm	BRC or STE azimuth word generator alarms or external azimuth data source alarm or internal (ADC) alarm (if the ADC is the source of azimuth data)
37	USAF map ml	Enabling of one or more USAF map sectors in the MIG
38	Not assigned	None
40	Weather on	Enabling of the weather contouring function (shall be reset whenever weather reporting is inhibited by the CIM's buffer overload alarm)
41	Weather alarm	The detection of any error in the weather contouring function when reporting is enabled
42	Not assigned	None
43	F M modem alarm	Failure of • modem clock ● ignal for any operational CIM output data channel
44	Half-scan inhibit alarm	The declaration of any "old data" in the CIM (or the MIG for the USAF status message)
4s	Buffer overload alarm	The CIM buffer overload alarm
46	Not ● saigned	None
47	Not assigned	None
48	Not assigned	None
49	F M channel 3 on	Enabling of PM data channel 3
so	FAA channel 2 on	gnabling of FM data channel 2
51	FAA channel 1 on	Enabling of FAA data channel I

Table VIII. CD-2 Statue Message Contents

INDEX OF PARAGRAPHS

		Page
1.	SCOPE	1
1.1	scope	1
1.2	Applicable definitions and abbreviations	2
2.	APPLICABLE DOCUMENTS	11
2.1	FAA Documents	11
2.1.1	FAA specifications	12
2.1.2	FAA standards	12
2.1.3	FAA publications	
2.2	Military and Federal publications	13
2.2.1	Military specifications	13
2.2.2	Military standards	13
2.2.3	Military publications	14
2.2.4	Federal standards	14
2.3	Other publications	14
2.4	Sources of documents	14
2.4.1	FAA documents	14
2.4.2	Military documents	14
2.4.3	Federal documents	15
2.4.4	National Electrical Code	15
2.4.5	IBBE Standard	15
2.4.6	American National Standards Institute, Inc. publications	15
2.4.7	Electronic Industries Association publications	15
2.5	Instruction manuals for associate equipment	15
2.6	Precedence of documents	15
3.	REQUIREMENTS	
3.1	General	15
3.1.1	Operational equipment to be furnished by contractor	16
3.1.1.1	CD-2A.	16
3.1.1.2	CD-2B.	16
3.1.1.3	CD-2c.	16
3.1.1.4	CD-2D.	17
3.1.2	Support equipment to be furnished by the contractor-as required by the contract	17
3.1.3	Documentation to be furnished by the contractor as required by the contract	17
3.1.3.1	System documentation	17
3.1.3.2	Hardware documentation	17
3.1.3.3	Software documentation	17
3.1.4	Services to be furnished by the contractor as required by the contract	18

INDEX OF PARAGRAPH cont. Page

3.2	General characteristics	18
3.2.1	General description	18
3.3	Environmental requirements	19
3.3.1	Aircraft and radar environments	19
3.3.1.1	Aircraft density distribution	19
3.3.1.2	Aircraft characteristics	20
3.3.1.2.1	Beacon transponder replies	20
3.3.1.2.2	Aircraft types	20
3.3.1.3	Beacon fruit rates	20
3.3.1.4	Spurious search radar returns	21
3.3.1.4.1	Ground clutter	21
3.3.1.4.2	Clutter residue	21
3.3.1.4.3	Receiver noise	21
3.3.1.4.4	Electronic radio frequency interference	21
3.3.2	Service conditions	21
3.3.2.1	Operating environment	21
3.3.2.1.1	Operating in extremes of climate	21
3.3.2.2	Operational electrical conditions	22
3.3.2.2.1	Electrical transients	22
3.3.2.2.2	Startup surges	23
3.3.2.2.3	Power consumption	23
3.3.2.3	Nonoperating environment	23
3.4	Functional requirements	23
3.4.1	Overall performance requirements	24
3.4.1.1	Coverage	24
3.4.1.2	Target detection	24
3.4.1.2.1	Beacon	25
3.4.1.2.1.1	Probability of detection	25
3.4.1.2.1.2	Range resolution	25
# 3.4.1.2.1.3	Azimuth resolution	25/1 #
3.4.1.2.1.4	Range accuracy	26
3.4.1.2.1.5	Azimuth accuracy	26
3.4.1.2.1.6	Split reports	26
3.4.1.2.1.7	Code validation and accuracy	26
3.4.1.2.1.8	False reports	26
3.4.1.2.2	Search	26
3.4.1.2.2.1	Probability of detection	27
3.4.1.2.2.2	Range resolution	27
3.4.1.2.2.3	Azimuth resolution	27
3.4.1.2.2.4	Range accuracy	27
3.4.1.2.2.5	Azimuth accuracy	27
3.4.1.2.2.6	Split reports	28
3.4.1.2.2.7	False reports	28

INDEX OF PARAGRAPH - cont.

		Page
3.4.1.3	Weather detection	28
3.4.1.3.1	Weather contour accuracy	28
3.4.1.3.2	False weather contours	28
3.4.1.4	Capacity	28
3.4.1.5	Equipment configuration	28
3.4.1.6	Operating modes	29
3.4.1.7	Service life	29
3.4.1.8	General growth requirements	30
3.4.2	Interface requirements	30
3.4.2.1	External equipment interfaces and formats	30
3.4.2.1.1	Long-range radar equipment	30
3.4.2.1.1.1	Input videos	31
3.4.2.1.1.2	Radar pretrigger	32
3.4.2.1.1.3	Antenna azimuth data	32
3.4.2.1.1.3.1	Azimuth pulses	32
3.4.2.1.1.3.2	Azimuth synchro	33
3.4.2.1.1.4	Radar test target pulse	33
3.4.2.1.1.5	Radar status data	34
3.4.2.1.2	Terminal radar equipment	34
3.4.2.1.2.1	Input videos	34
3.4.2.1.2.2	Radar pretrigger	35
3.4.2.1.2.3	Antenna azimuth data	35
3.4.2.1.2.4	Test target pulse	35
3.4.2.1.2.5	Radar status data	35
3.4.2.1.3	Beacon radar equipment	36
3.4.2.1.3.1	Input video	36
3.4.2.1.3.2	Beacon mode pair trigger	37
3.4.2.1.3.3	Antenna azimuth data	37
3.4.2.1.3.4	Test target pulse	37
3.4.2.1.3.5	Beacon status data	37
3.4.2.1.4	Data transmission equipment	38
3.4.2.1.4-l	Common output message formats	38
3.4.2.1.4.2	Alternate data transmission interface	39
3.4.2.1.5	CD-2 external data interface	39
3.4.2.1.5.1	CD-2 remote audible alarm	39
3.4.2.1.6	Military equipment	39
3.4.2.1.6-l	AN/GPA-124 Coder-Decoder	40
3.4.2.1.6.2	USAF plan position indicator	40
3.4.2.1.6.3	Height finder	41
3.4.2.1.6.3.1	Synchro data	41
3.4.2.1.6.3.2	Zero range trigger	41
3.4.2.1.6.3.3	Range-height indicator	41
3.4.2.1.6.4	Military modems	41
3.4.2.1.6.4.1	Military message formats	42
3.4.2.2	Internal CD-2 interfaces	42
3.4.3	Detailed functional requirements	42
3.4.3.1	Initial CD-2 functions	42
3.4.3.1.1	Beacon target extractor	42
3.4.3.1.1.1	Beacon reply converter	43
3.4.3.1.1.1.1	Video quantizer	43
3.4.3.1.1.1.2	Bracket detection	44

INDEX OF PARAGRAPH - cont.

		Page
3.4.3.1.1.1.3	Code extraction	45
3.4.3.1.1.1.4	Garble sensing	45
3.4.3.1.1.1.5	Special Military replies	46
3.4.3.1.1.1.6	BRC timing	46
3.4.3.1.1.1.7	BRC output	47
3.4.3.1.1.2	BTE processor	48
3.4.3.1.1.2.1	Beacon target detection	48
3.4.3.1.1.2.2	Code validation	49
3.4.3.1.1.2.3	Code transformation	50
3.4.3.1.1.2.4	Beacon target position bias correction	50
3.4.3.1.1.2.5	Beacon run length processing	51
3.4.3.1.1.2.6	Beacon strobe processing	51
3.4.3.1.1.2.7	Beacon processing range	52
3.4.3.1.1.2.8	Beacon and search correlation	52
3.4.3.1.1.2.9	Beacon offset	52
3.4.3.1.1.2.10	BTE output target message contents	53
3.4.3.1.1.2.11	BTE self-test	55
3.4.3.1.1.2.11.1	Operational self-test	55
3.4.3.1.1.2.11.2	Diagnostic self-test	56
3.4.3.1.1.2.12	BTE status monitoring and'reporting	56
3.4.3.1.2	Search target extractor	57
3.4.3.1.2.1	Analog-to-digital converters	57
3.4.3.1.2.2	STE processor	58
3.4.3.1.2.2.1	STE processor inputs	58
3.4.3.1.2.2.2	Search target *processing*	59
3.4.3.1.2.2.2.1	Target video processing	59
3.4.3.1.2.2.2.2	Search target detection	61
3.4.3.1.2.2.2.3	Search target position bias correction	62
3.4.3.1.2.2.2.4	Search run length processing	62
3.4.3.1.2.2.2.5	Search strobe processing	63
3.4.3.1.2.2.2.6	Search processing range	63
3.4.3.1.2.2.3	Weather processing	63
3.4.3.1.2.2.3.1	Weather video processing	64
3.4.3.1.2.2.3.2	Weather video integration	65
3.4.3.1.2.2.3.3	Weather video crossover	65
3.4.3.1.2.2.3.4	Weather threshold	66
3.4.3.1.2.2.3.5	Weather data reporting	67
3.4.3.1.2.2.J.6	Weather contouring range	68
3.4.3.1.2.2.4	STE output message contents	68
3.4.3.1.2.2.5	STE self-test	70
3.4.3.1.2.2.5.1	Operational self-test	70
3.4.3.1.2.2.5.2	Diagnostic self-test	71
3.4.3.1.2.2.6	STE status monitoring and reporting	71
3.4.3.1.3	*Control* and interface module	72
3.4.3.1.3.1	Radar interface	72
3.4.3.1.3.1.1	Azimuth data generation	73
3.4.3.1.3.2	System data bus controller	74
3.4.3.1.3.3	Modem adapter	74
3.4.3.1.3.3.1	Message reformatting	74

INDEX OF PARAGRAPH - cont. Page

3.4.3.1.3.3.2	Output buffering	75
3.4.3.1.3.3.3	Modem control	76
3.4.3.1.3.4	Test target generator	77
3.4.3.1.3.4.1	Real-time quality control test target	77
3.4.3.1.3.4.2	Maintenance test targets	78
3.4.3.1.3.5	CIM self-test	80
3.4.3.1.3.5.1	Operational self-test	80
3.4.3.1.3.5.2	Diagnostic self-test	81
3.4.3.1.4	Maintenance console	81
3.4.3.1.4.1	Plan position display	81
# 3.4.3.1.4.1.1	Plan position indicator mode	82/1 #
3.4.3.1.4.1.2	Random access ppi mode	85
3.4.3.1.4.1.2.1	RAPPI symbols	85
3.4.3.1.4.1.2.2	RAPPI refresh	87
3.4.3.1.4.1.3	Plan position display type and quality	88
3.4.3.1.4.2	Tabular display	89
3.4.3.1.4.3	Printer	91
3.4.3.1.4.4	Data entry devices	91
3.4.3.1.4.5	MC self-test	92
3.4.3.1.4.5.1	Plan position display self-test	92
3.4.3.1.4.5.2	Tabular display and data entry device self-test	93
3.4.3.1 4.5.3	Diagnostic self-test	93
3.4.3.1.5	Military interface group	93
3.4.3.1.5.1	AIMS processing'	94
3.4.3.1.5.1.1	AIMS timing	94
3.4.3.1.5.1.2	AIMS target detection	95
3.4.3.1.5.1.3	AIMS target report processing	96
3.4.3.1.5.1.4	AIMS identification request processing	96
3.4.3.1.5.1.5	AIMS test target generator	9 6
3.4.3.1.5.2	Military ppi data	97
3.4.3.1.5.3	Height finder radar data processing	97
3.4.3.1.5.3.1	Height finder request message processing	98
3.4.3.1.5.3.2	Height finder mode control	98
3.4.3.1.5.3.3	RHI message consoles and display signals	99
3.4.3.1.5.3.3.1	Height display signals	99
3.4.3.1.5.3.3.2	Range display signals	100
3.4.3.1.5.3.3.3	RHI message console	100
3.4.3.1.5.3.4	Height report processing	102
3.4.3.1.5.4	Military data processing	103
3.4.3.1.5.4.1	Military output message processing	103
3.4.3.1.5.4.1.1	Source and types of CD-2 output data	103
3.4.3.1.5.4.1.2	Output message preparation and filtering	104
3.4.3.1.5.4.1.3	Output buffering and modem control	105
3.4.3.1.5.4.1.4	Display of MIG data	106
3.4.3.1.5.4.2.	Military input message processing	107
3.4.3.1.5.5	MIG self-test	107
3.4.3.1.5.5.1	Operational self-test	107
3.4.3.1.5.5.2	Diagnostic self-test	108

INDEX OF PARAGRAPH - cont. Page

3.4.3.1.6	CD-2 operation and control	109
3.4.3.1.7	Status monitor	111
3.4.3.1.7.1	Monitored functions	111
3.4.3.1.7.2	Status reporting and display	111
3.4.3.1.7.2.1	CD-2 status message	112'
# 3.4.3.1.7.2.2	Status and alarm panel	112 #
3.4.3.1.7.2.3	Status on the tabular display	114
3.4.3.1.7.3	System performance diagnosis	114
3.4.3.2	Provisions to accommodate MTD	115
3.4.3.2.1	MTD description	115
3.4.3.2.2	CD-2 functions with MTD	116
3.4.3.2.2.1	MTD reqirements of the CIM	116
3.4.3.2.2.2	MTD requirements of the STE	116
3.4.3.2.2.3	MTD requirements of the maintenance console	116
3.4.3.3	Provisions to accomodate AMPS	117
3.4.3.3.1	AMPS description	117
3.4.3.3.2	CD-2 functions with AMPS	117
3.4.3.4	CD-2 relationship to DABS	118
3.5.	General design requirements	118
3.5.1	Electrical design requirements	118
3.5.1.1	Input ac line controls	118
3.5.1.2	Power supplies	119
3.5.1.2.1	Regulation	119
3.5.1.2.2	Ripple	ii9
3.5.1.2.3	Interlocks	119
3.5.1.3	Cabinet supply wiring	120
3.5.1.4	Batteries	120
3.5.1.5	Relays	120
3.5.1.6	Electron tubes	120
3.5.1.7	Electronic design	120
3.5.1.8	System grounding	120
3.5.1.9	Conducted and radiated electomagnetic interference	122
3.5.2	Mechanical design requirements	122
3.5.2.1	Construction and packaging	122
3.5.2.1.1	Physical size	123
3.5.2.1.2	Cabinets	123
3.5.2.1.3	Modules	124
3.5.2.1.4	Reserve capacity	125
3.5.2.1.5	Maintenance console	125
3.5.2.1.6	Height finder message shelf console	126
3.5.2.1.7	Internal cabling and wiring	126
# 3.5.2.2	Personnel safety and environment	126/1 #

INDEX OF PARAGRAPH - cont.

		Page
# 3.5.2.2.1	Safety grounding rods	126/1 #
3.5.2.2.2	Cabinet illumination	127
3.5.2.3	Convenience outlets	127
3.5.2.4	Cabinet ventilation and cooling	127
3.5.2.5	Overheat condition detection and reporting	128
3.5.2.6	Finishes	128
3.5.2.7	Dissimilar metals	128
3.5.2.8	Mechanical design of electronic components	128
3.5.2.8.1	Backplane	128
3.5.2.8.2.	Circuit card assemblies	128
3.5.2.6.2.1	Component mounting	129
3.5.2.8.2.2	CCA Alterability	129
'3.5.2.8.2.3	CCA baseboard	130
3.5.2.8.3	Wrapped connections	130
3.5.2.8.4	Controls	130
3.5.2.8.5	Connectors	131
3.5.2.8.5.1	CCA connectors	'131
3.5.2.8.5.2	CCA test points	131
3.5.2.8.5.3	Inter-module and inter-cabinet connector	131
3.5.2.8.5.4	Module test points	132
3.5.2.8.6	Front panel indicators	132
3.5.2.8.7	Front panel controls	133
3.5.2.8.7.1	Maintenance console controls	133
.3.5.2.8.7.2	MIG message'console trackball	133
3.5.2.8.7.3	MIG message console controls	133
3.5.2.9	Cable entry and exit locations	134
3.5.2.10	CD-2 junction box	134
3.5.2.11	Reference designations and marking	135
3.5.2.12	Moisture pockets	135
3.5.2.13	Other requirements	135
3.6	Maintenance and test equipment	135
3.6.1	Standard maintenance equipment	136
3.6.2	Special maintenance equipment	136
3.6.3	CD-2 support equipment	137
3.6.3.1	Circuit card assembly test set	137
3.6.3.2	Plug-in assembly extenders	137
3.6.3.3	Program development set	138
# 3.6.3.4	Special tools and ancillary items	138/1
3.6.3.5	Input simulator	139
3.7	Spare parts	139
3.7.1	Site spares	139
3.7.2	Depot spares	140

INDEX OF PARAGRAPH - cont. Page

3.8	Computer programs	140
3.8.1	Operational programs	140
3.8.2	Support programs	140
3.8.2.1	utility system	140
3.8.2.1.1	Assembler program	140
3.8.2.1.2	Additional programs necessary for program compilation	141
3.8.2.1.3	Loaders	141
3.8.2.1.4	Dumps	141
3.8.2.1.5	Program debugging aids	141
3.8.2.2	Maintenance and diagnostic programs	141
3.8.3	Test programs	141
3.9	Reliability and maintainability	141
3.9.1	Definitions applicable to reliability and maintainability	141
3.9.2	Reliability and maintainability requirements	142
3.9.2.1	Maintenance approach	143
3.9.3	Reliability program	143
3.9.3.1	Reliability program plan	144
9.9.3.2	Reliability program management	144
3.9.3.3	Reliability program tasks	144
3.9.3.3.1	Design techniques	144
3.9.3.3.2	Thermal design analysis	144
3.9.3.3.3	Reliability analysis	145
3.9.3.3.4	Reliability predictions	145
3.9.3.3.5	Total logistic predictions	145
3.9.3.3.6	Failure modes, effects, and criticalness analysis	146
3.9.3.3.7	Effects of storage and handling	146
3.9.3.3.0	Design reviews	147
3.9.3.3.9	Failure reporting, analysis, and correction	147
3.9.3.3.10	Reliability status	147
3.9.4	Maintainability program	147
3.9.4.1	Maintainability program plan	147
3.9.4.2	Maintainability program management	148
3.9.4.3	Maintainability program tasks	149
3.9.4.3.1	Maintainability analysis	149
3.9.4.3.2	Maintenance concept plan	149
3.9.4.3.3	Haintainability design criteria	149
3.9.4.3.4	Haintainability design tradeoffs	149

INDEX OF PARAGRAPH - cont. Page

3.9.4.3.5 Maintainability predictions 150
3.9.4.3.6 Design reviews 150
3.9.4.3.7 Maintainability data collection 150
3.9.4.3.8 Maintainability status 150
3.9.5 Reliability and maintainability testing 151

3.10 Installation and checkout 151'

3.10.1 Installation cables and materials. 151
3.10.2 Installation and checkout tasks 151
3.10.3 Integration into the NAS 152

3.11 (Not used) 152

3.12 Documentation 152

3.12.1 System documentation 153
3.12.1.1 Management reports 153
3.12.1.1.1 Management reports during design and development 153
3.12.1.1.2 Management reports during production 154
3.12.1.2 System design data 154
3.12.1.2.1 System description 155
3.12.1.2.2 Block diagram 155
3.12.1.2.3 Information logic flow diagrams 155
3.12.1.2.4 Input-output details 15s
3.12.1.2.5 Conceptual implementation of MTD, AMPS and DABS 15s
3.12.1.2.6 Computer programs 156
3.12.1.2.7 Mechanical and electrical data 156
3.12.1.2.8 Reliability and maintainability data 156
3.12.1.2.9 Deleted
3.12.1.3 Qualification and acceptance tests plans 156
3.12.1.3.1 Reliability test plan 158
3.12.1.3.2 Maintainability test plan 158
3.12.1.4 Equipment and computer program test procedures 158
3.12.1.5 Final test reports 159
3.12.1.6 Site preparation reports 159
3.12.1.7 Installation documents 160
3.12.1.8 As-built installation drawings 160
3.12.1.9 Interface control documents 161
3.12.1.10 NAS integration test procedures 161
3.12.1.11 Electromagnetic interference control plan 161
3.12.1.12 Deleted
3.12.2 Hardware documentation 161
3.12.2.1 Reliability and maintainability documentation 161
3.12.2.1.1 Reliability program plan 161
3.12.2.1.2 Reliability status report 161
3.12.2.1.3 Maintainability program plan 162

INDEX OF PARAGRAPH - cont. Page

3.12.2.1.4	Maintainability concept plan	162
3.12.2.1.5	Maintainability status report	162
3.12.2.2	Equipment instruction books	162
3.12.2.2.1	Manuscript reference designations	163
3.12.2.2.2	Standard safety notices	163
3.12.2.2.3	General description	163
3.12.2.2.4	Technical description	163
3.12.2.2.4.1	Theory of operation	163
3.12.2.2.4.2	Technical illustrations	164
3.12.2.2.5	Fault isolation procedures	167
3.12.2.2.6	Installation, integration and checkout	167
3.12.2.2.7	Computer software	167
3.12.2.2.8	Foldout	167
3.12.2.3	Drawings and technical memoranda	167
3.12.2.4	Provisioning technical documentation	167
3.12.3	Software documentation	168
3.12.3.1	Operational program documentation	168
3.12.3.1.1	Program description manual	168
3.12.3.1.2	Operator's manuals	169
3.12.3.2	Support program documentation	169
3.12.3.2.1	Assembler reference manual	169
3.12.3.2.2	Assembler operator's manual	169
3.12.3.2.3	Utility system and program description manual	169
3.12.3.2.4	Programmer's reference manual	169
# 3.12.3.2.5	Deleted	#
3.12.3.3	Test program user's manual	170
3.13	Government furnished equipment	170
3.13.1	Mechanical requirements for the ADC unit	170
3.13.2	Electrical requirements for the ADC unit	170
3.13.3	ADC functional requirements	171
4.	QUALITY ASSURANCE PROVISIONS	171
4.1	General	171
# 4.1.1	Testing requirements	173 #
4.1.2	Recording of test data	173
4.1.3	Test direction	173
4.1.4	Failure recording and reporting	173
4.2	Test conditions	174
4.3	Tests and inspections	174
# 4.3.1	Quality control, Inspection and Test	174 #
4.3.1-1	Incoming inspection	174
# 4.3.1.2	Unit production inspection	174/1 #
4.3.2	Contractor's preliminary tests	175

INDEX OP PARAGRAPH - cont. Page

#	4.3.3	Design qualification tests	175 #
	4.3.3.1	General characteristics tests	175
#	4.3.3.2	Performance Test	175 #
	4.3.3.3	Reliability test and demonstration	176
	4.3.3.4	Maintainability test	176 ,
	4.3.4	Type tests	177
#	4.3.4.1	Deleted	
	4.3.4.2	Deleted	
	4.3.4.3	Deleted	#
	4.3.5	Production tests	178
	4.3.6	Availability calculation	179
	4.3.7	Onsite acceptance test	179
	4.3.8	Integration tests	180
	5.	PREPARATION FOR DELIVERY	180
	5.1	System and equipment deliveries	180
	5.2	Depot spare parts deliveries	180
	6.	NOTES	

INDEX OF FIGURES

Figure 1	CD-2C Block Diagram of Initial Application	181
Figure 2	CD-2A and CD-2C Search Radar Interface	182
Figure 3	CD-2D Search Radar Interface	183
Figure 4	CD-2 Beacon Interface	184
Figure 5	CD-2 Modem Interface	1 8 5
Figure 6	CD-PC Military Equipment Interfaces	186, 187
Figure 7	The Moving Target Detector and the CD-2	188
Figure 8	ATCRBS Honopulse Processing Subsystem (AMPS) and the CD-2	189
Figure 9	The Discrete Address Beacon System (DABS) and the CD-2	190
Figure 10	A Possible CD-2 Package	191
Figure 11	Government-Furnished Azimuth Data Converter	192
Figure 12	Azimuth Data Converter Functional Block Diagram	193
Figure 13	Azimuth Data Conventer Mounting Dimensions	194
Figure 14	Azimuth Data Conventer Electrical Characteristics	195

INDEX OF TABLES

		Page
Table I	Associated Interconnecting Equipment	196
Table II	Common Output Message Formats	197, 198
Table III	GPA-124 Interface Signal Characteristics	199
Table IV	GPA-124 Request Message Contents	200
Table V	Range-Height Indicator Interface Signal Characteristics	201
Table VI	Unique USAF Output Message Formats	202
Table VII	Military Request Message Formats	203
Table VIII	CD-Z States Message Contents	204