AC NO: 150/5220-12
DATE: 6/12/78

ADVISORY CIRCULAR

SUBJECT:

AIRPORT SNOWSWEEPER

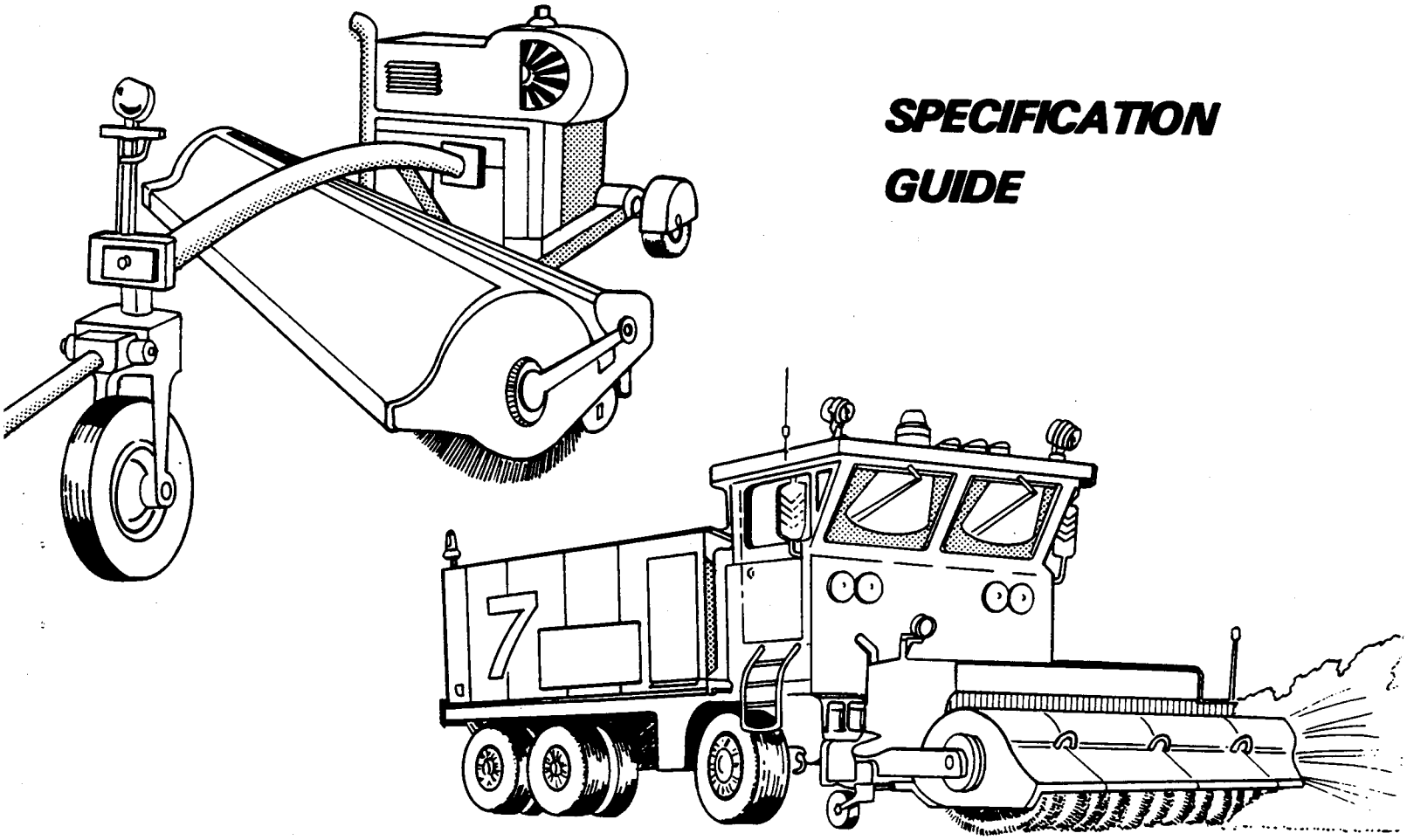

SPECIFICATION GUIDE

DEPARTMENT OF TRANSPORTATION
FEDERAL AVIATION ADMINISTRATION

Initated by: AAP-720

AC NO: 150/5220-12

DATE: 6/12/78

ADVISORY CIRCULAR

DEPARTMENT OF TRANSPORTATION
FEDERAL AVIATION ADMINISTRATION

SUBJECT: AIRPORT SNOWSWEEPER SPECIFICATION GUIDE

1. PURPOSE. This guide specification provides information covering multiple capability airport snowsweepers. The words "shall" and "will" are not to be construed as mandatory requirements of the Federal Aviation Administration (FAA). They are specifically included so that portions of this guide specification may be copied verbatim by local specification writers, at their option.

2. APPLICATION. This guidance is intended for use by all airport operators.

3. REFERENCES.

   a. AC 150/5200-23, Airport Snow and Ice Control, dated 11/1/76.

   b. MIL-B-17041E, July 7, 1972, Military Specification for Self-Propelled Snow Removal Units.

   c. AK-71-09-048, Snow Removal and Ice Control at Canadian Airports, dated October 1976 by the Canadian Department of Transport.

4. HOW TO OBTAIN THIS CIRCULAR AND OTHER MATERIAL REFERRED TO IN THIS CIRCULAR.

   a. Additional copies of this circular and the circulars listed above may be obtained from the Department of Transportation, Publications Section, M-443.1, Washington, D. C. 20590. FAA field personnel may obtain copies from their respective Regional Distribution Officers.

   b. MIL-B-17041E, July 7, 1972, Military Specification for Self-Propelled Snow Removal Units, can be obtained by writing to Item Manager, Snow Removal Equipment, WR-ALC/MM11CA4, Robins Air Force Base, Georgia 31098.

Initiated by: AAP-720

c. AK-71-09-048, Snow Removal and Ice Control at Canadian Airports, dated October 1976 by the Canadian Department of Transport. Write to Airports and Construction Services Directorate, Airport Facilities Branch, Mobile Support and Stationary Equipment Division, Ottawa, Canada.

ROBERT J. AARONSON
Assistant Administrator
Office of Airports Programs

TABLE OF CONTENTS

	PAGE NO.
CHAPTER 1. INTRODUCTION	1 (and 2)
1. Background	1 (and 2)
CHAPTER 2. REQUIREMENTS	3
SECTION 1. GENERAL EQUIPMENT DESCRIPTION	3
2. Classification	3
3. Materials	3
4. Design	3
5. Construction	3
6. Performance Standards	4
7. Snow Removal Functional Tests	4
SECTION 2. CHASSIS COMPONENT AND DESIGN	5
8. Vehicle Chassis	5
9. Dimensions, Weights and Clearances	5
10. Structural Members	6
SECTION 3. ENGINES AND COMPONENTS	6
11. Engines	6
12. Cooling System, Accessories and Winterization	6
13. Fuel System	7
14. Engine Governors	8
15. Lubrication	8
16. Exhaust System and Muffler	9
17. Accessibility	9
SECTION 4. DRIVETRAIN AND COMPONENTS	10
18. General Types of Drivetrains	10
19. Transfer Assembly	10
20. Axles	10
21. Brakes/Air System	11
22. Steering Mechanism	12
23. Suspension System	12
24. Wheels, Rims, Tires and Tubes	12
SECTION 5. HYDRAULIC SYSTEM	13
25. General	13
26. Hydraulic Pump and Power Takeoff	13
27. Hydraulic Lines and Fittings	13
28. Hydraulic Fluid Tank and Cooler	13
29. Broom Lift System	13
30. Winterization of the Hydraulic System	13

	PAGE NO.
SECTION 6. ELECTRICAL SYSTEM COMPONENTS	14
31. General	14
32. Power Supply	14
33. Batteries	14
34. Starting Device	14
35. Ignition System for Gasoline Engines	15
36. Battery Charging Connection	15
37. Lighting System	15
38. Communications Equipment	16
SECTION 7. OPERATOR'S CAB	16
39. General	16
40. Capacity	16
41. Seats	16
42. Windows	16
43. Mirrors	16
44. Heater/Defroster	17
45. Instrumentation	17
SECTION 8. SHEET METAL COMPONENTS	18
46. Cab/Body/Engine Compartments	18
47. Compartment Doors	18
SECTION 9. SWEEPER AND COMPONENTS	19
48. General	19
49. Pushed Type Sweeper	19
50. Towed Type Sweeper	20
51. Common Equipment	21
52. Optional Equipment	23
SECTION 10. MISCELLANEOUS RECOMMENDATIONS	24
53. Paint and Anti-Corrosion Treatment	24
54. Vehicle and Sweeper Identification	24
55. Nameplates and Instruction Plates	24
56. Hourmeters	24
57. Hot Weather Roadability	25 (and 26)
58. Technical Publications	25 (and 26)
59. Tools	25 (and 26)
60. Accessories	25 (and 26)
61. Instruction and Training	25 (and 26)
CHAPTER 3. QUALITY ASSURANCE PROVISION	27
62. General	27
63. Inspection and Test Procedures	27
64. Fire Extinguisher	27
65. Preparation for Delivery	28
66. Auxiliary Equipment	28
67. Options	28
68. Warranty	30

	PAGE NO.
Figure 1 - Vehicle GVW and Horsepower Rating	31
Figure 2 - Typical Sweeper Types	32
Figure 3 - Sweeper Layout	33
Figure 4 - Measurement Conversion Table	34

CHAPTER 1. INTRODUCTION

1. BACKGROUND.

   a. These vehicles are primarily intended for use in high-speed sweeping and cleaning of snow from airport operational areas, including runways, taxiways and ramp aprons.

   b. This guide specification describes vehicles possessing the minimum performance capabilities recommended for an acceptable high-speed airport runway sweeper.

   c. Note to purchaser or specification writer: The vehicle specifications may be modified to meet user requirements. The equipment purchaser or specification writer can select accessories that meet individual requirements from the production options in the quality assurance provision. The desired changes should be specified from the list in paragraph 67, page 28.

CHAPTER 2. REQUIREMENTS

SECTION 1. GENERAL EQUIPMENT DESCRIPTION

2. CLASSIFICATION. The following two general classes comprise a family of runway sweepers. Typical sweeper types from these classes are shown in Figure 2, page 32.

   a. Small Swath Snowsweeper. The sweeper may be of any physical design having a demonstrated or manufacturer's certified snow/slush removal and broadcasting ability sufficient to produce clear pavement within the swath width at the rated speed. The sweeper shall have a minimum broom diameter of 24 inches and a swath width of not greater than 12 feet.

   b. Large Swath Sweeper. The sweeper may be of any physical design having a demonstrated or manufacturer's certified snow/slush removal and broadcasting ability sufficient to produce clear pavement within the swath width at the rated speed. The sweeper shall have a minimum broom diameter of 36 inches and a swath width greater than 12 feet. All swath widths shall be measured when broom is inclined at a 30° angle from the transverse position.

3. MATERIALS. Materials shall conform to the specifications listed herein. When not specifically listed, materials shall be of the best quality used for the purpose in commercial practice. Materials shall be free from all defects and imperfections that might affect the serviceability of the finished product.

4. DESIGN. The design of the equipment shall be in accordance with the best engineering practices. The equipment design and accessory installation shall permit accessibility for use, maintenance and service. All components and assemblies shall be free of hazardous protrusions, sharp edges, cracks or other elements which might cause injury to personnel or equipment. All oil, hydraulic and air tubing lines and electrical wiring shall be located in protective positions properly attached to the frame or body structure and shall have protective loom or grommets at each point where they pass through structural members, except where a through-frame connector is necessary.

5. CONSTRUCTION. The vehicle shall be constructed so that no part can work loose in service. The vehicle shall be built to withstand the strains, jars, vibrations and other conditions incident to service intended. Design of the vehicle shall produce the necessary clearances to permit the satisfactory use of tire chains on drive wheels when desired.

6. PERFORMANCE STANDARDS. The fully equipped sweeper unit, loaded to GVW and with broom and blower in transport position, shall be capable of maintaining a continuous forward speed of not less than 40 MPH on dry level pavement and negotiating a four percent dry smooth paved grade at 30 MPH. The sweeper shall remove snow of the following depths and densities:

   a. Small swath vehicle: two inches of light snow (density 8 to 15 lb/ft^3) or one-half inch of slush (density 40 lb/ft^3).

   b. Large swath vehicle: three inches of light snow (density 8 to 15 lb/ft^3) or one inch of slush (density 40 lb/ft^3).

   The broom shall have no performance degradation when sweeping thin deposits of dry sand, dust, water or other light debris. The self-propelled runway sweeper may be either a pushed or towed type, or a conventional or cab-over type chassis, and of either single or dual engine construction. Provision shall be made to vary broom rotation speed (from zero to an excess of 600 rpm), snow broadcast distance, broom angles, and elevate and adjust broom/pavement pressure and sweeper pattern. Sweepers may be fitted with an airblast blower as an option. These blowers shall have a selectable discharge, either right or left, and shall be driven by the broom powerplant. The unit shall start and perform normal operations at an ambient temperature of -30° F. (-60° F. may be purchaser's option) and shall be capable of sustained dry sweeping performance at 90° F. The unit must be capable of broadcasting the snow discharge on either side of the vehicle. The entire snow handling assembly including, but not limited to broom, blower and engine, shall be equipped so as to allow full control of all normal operating functions and monitoring of essential parameters by a single driver/operator using minimum controls from the cab of the vehicle. The sweeper shall be able to work in conjunction with allied snow removal equipment or as a single unit.

7. SNOW REMOVAL FUNCTIONAL TESTS. The manufacturer must submit with his bid the certified results of tests conducted establishing compliance with the performance requirements. The purchaser reserves the right, at his sole discretion and expense, to conduct a performance test to insure contractor compliance with the stipulated requirements prior to acceptance. Tests involve a number of test runs on a runway or taxiway at least 1,000 feet long in varying depths of snow (one inch, two inches, etc.), at as high a speed as practical but leaving clear pavement within the swath width without snow residue due to bouncing and skipping of the rotary broom and without any other adverse effects such as

oscillations of the broom caster wheels. Snow density should vary from light snow to heavier slush and water. Operations should be conducted with and without blower. The manufacturer can witness the tests but interpretation is the sole responsibility of the purchaser.

SECTION 2. CHASSIS COMPONENT AND DESIGN

8. VEHICLE CHASSIS. The carrier chassis, complete with cab, shall be a two or four-wheel drive type design with an appropriate gross vehicle weight rating, equipped with power assisted steering, and automatic, manual, or hydrostatic transmission with suitable load ranges to accommodate normal operating conditions. If necessary, the vehicle will be equipped with a transfer case or auxiliary transmission to achieve the required performance. All parts and accessories necessary for safe operation of the vehicle shall be provided as required by and shall conform to applicable provisions of the Federal Highway Administration's (FHWA) Motor Carrier Safety Regulations, Part 293. The chassis frame shall be of riveted, bolted or welded construction and shall be provided with adequate cross members, exclusive of engine supports, so designed and constructed as to support gross weight of the body and load, powerplants, sweeper and all other equipment under anticipated maximum operating conditions. No alterations shall be made to the frame which will reduce its designated strength. If frameless integral body construction is used, the manufacturer shall certify that the design meets the above requirements. When the sweeper is a dual, on-board engine system, the blower engine shall be skid mounted or integral and installation shall not modify the structural integrity of the chassis. A suitable hitch capable of pulling a towed type sweeper shall be mounted at the rear of the vehicle and securely attached to the frame structure, if applicable.

9. DIMENSIONS, WEIGHTS AND CLEARANCES.

   a. Height - excluding lights, exhaust stacks, not more than 150 inches.

   b. Width - maximum overall width without broom, or blower ducts is 120 inches.

   c. Length - maximum overall length - 35 feet (pushed type only).

   d. Turning Diameter - the wall to wall turning circle diamter without broom, two wheel steering only - 70 feet.

   e. Ground Clearance - the ground clearance with broom/blower raised, not less than eight inches.

f. Axle Weight Distribution. Axle weight distribution ratios during tractive efforts while sweeping shall not show greater than 15 percent differential, with 50 percent weight on front axle and 50 percent weight on rear axle considered ideal.

g. GVW. The GVW rating of the sweeper unit shall be dependent on the classification of the vehicles, Figure 1, page 31. The weight should be consistent with the most common engineering practices in vehicles in each class to maintain maximum tractive effort and efficiency.

h. Weight Distribution. The center of gravity shall be kept as low as possible under all conditions of loading. The vehicle shall be capable of resting transversely on a side slope equivalent to a 30 percent grade without danger of overturning to demonstrate a low center of gravity.

10. STRUCTURAL MEMBERS. The frame shall be of pressed or structural steel channel, reinforced as required to prevent distortion under maximum loads. Cross section design and area shall be sufficient to prevent torsion during normal operation. If required, additional reinforcement such as liners, "L" plate, can be specified.

SECTION 3. ENGINES AND COMPONENTS

11. ENGINES. The vehicle engine(s) shall be of the internal combustion four-stroke cycle or two-stroke cycle liquid or air cooled, gasoline or diesel type using the same type fuel, and having not less than four cylinders with large sweepers using all diesel power. Although not a recommended practice, smaller towed sweepers may use different type fuel from carrier vehicle provided clear fuel type identification is made on the filler spout. The engine(s) shall develop the torque and horsepower of sufficient capacity to meet normal operational requirements without the engine(s) exceeding a "no load" governed speed at the peak of a certified gross brake horsepower (bhp) curve. The engine(s) shall operate satisfactorily and shall be capable of demonstrating the performance characteristics specified herein with fuel conforming to regular commercial grade.

12. COOLING SYSTEM, ACCESSORIES, AND WINTERIZATION.

a. Cooling System. The engine(s) cooling system shall be of the air or liquid type. Coolant temperature control of the engine(s) shall be accomplished by thermostatically controlled airflow doors, and/or by thermostatically controlling the flow of engine coolant

through the radiator. The system shall be designed so that upon failure of the thermostatic controls, the engine may continue normal operation without overheating resulting from restriction of engine coolant circulation or the restriction of air flow through the engine or radiator shutters. A manual shutter operation provision may be added.

b. Coolant Temperatures. Coolant temperatures should be maintained at not more than 210° F. or less than 140° F. when operated in ambient temperatures of -20° F. In areas experiencing temperatures below -40° F., and where it is common industry practice to do so, it is considered advisable to design for winterization down to -60°F. For example, include preheating the cooling system devices, oil pan heaters, lubricating oil heaters, battery block heaters, and ether vapor start systems.

c. Coolant Circulation Bypass. Provide a bypass to permit coolant circulation in the engine block, with thermostat closed, until normal operating temperature is reached. A 160/170° F. thermostat shall be provided with the cooling system being designed to withstand an internal pressure minimum of seven pounds per square inch. Drain cocks will be installed at the low point of the cooling system and at such other points as may be necessary to drain the system completely.

13. FUEL SYSTEM.

a. Fuel Tank(s) and Fuel Lines. Fuel tank(s) shall have a total capacity sufficient to supply fuel to both the carrier engine and the broom/blower drive engine when both engines are operating at rated intermittent horsepower at governed speed for not less than eight hours. When more than one tank is furnished, means shall be provided to assure equalized fuel level in all tanks. Fuel lines shall be interconnected so that either or both engines may be supplied with fuel at the option of the operator. Fuel lines shall be securely fastened in place, installed to prevent chafing or strain, and protected by grommets where lines project through metal apertures. The fuel tank(s) shall be equipped with an accessible drain plug or quick drain at the lower point of the fuel tank. Interconnected fuel tanks do not apply to towed sweepers.

b. The Engine(s) Fuel System. The system shall be installed so as to preclude the possibility of vapor lock. The system shall include carburetor(s) or fuel injector(s), a choke system (manual or automatic), fuel pump(s), fuel strainers, dry filter type air

cleaners, all plumbing, fuel lines, valves, drains, and necessary accessories needed to provide a complete operational system.

c. The Filler Pipe. The filler pipe opening shall be located in an accessible location outside of the cab, and the filler cap shall have a chain attached. The tank shall be mounted so that it will not be damaged by distortion of the chassis and will not be affected by heat from the engine exhaust. The fuel tank shall conform to the requirements of the FHWA.

d. Additional Fuel Tanks. These can be attached where extra vehicle range is required. See paragraph 67, page 29.

e. Air Cleaner. To preclude the possibility of ice freezeup, the air cleaner shall be a two stage type, incorporating a centrifuging precleaner stage and a dry type replaceable paper final stage. The air cleaner shall be equipped with an air cleaner service indicator to show when the dry type paper cleaner needs servicing. The connection between air cleaner outlets and the diesel or gas engine intake shall be waterproof and dust tight.

14. ENGINE GOVERNORS. The carrier engine governor shall be set to limit engine speed to the maximum operating speed recommended by the engine, driveline and power train specifications. The broom/blower engine (dual or single engine vehicle) governor shall provide a no load and full-load maximum speed, and must not adversely affect engine performance. The broom drive engine shall be equipped with capability for emergency shut-downs to preclude engine damage in the event of component failure.

15. LUBRICATION.

a. Lubricating Systems. The engine and chassis lubricating systems shall be the manufacturer's current standard production items. The oil filter for the engine(s) shall be either (1) a full flow type with replaceable elements; or (2) a bypass type with replaceable elements.

b. The sweeper/blower and drivetrain components shall have a means of lubrication provided for all required components. Where the use of high lubricating pressure may damage grease seals or other parts, a suitable pressure release device shall be provided. The snow removal unit shall be lubricated prior to delivery with lubricants designated for use in the ambient air temperature at the delivery point. The snow removal unit shall be conspicuously tagged to identify the lubricants and their temperature range.

16. EXHAUST SYSTEM AND MUFFLER. The vehicle and sweeper engine(s) shall be equipped with an efficient exhaust system and muffler. The tailpipe shall be of a size as to avoid undue increase in back pressure and shall be located in such a manner that entrance of exhaust gases into the cab shall be minimized under all conditions of operation. Horizontal portions of exhaust systems shall be provided with a cover plate that will shed fluids when spilled fuel may come in contact with the system. Exhaust piping, when located at the rear of the carrier cab, shall be furnished with a heat shield. When design considerations permit, exhaust systems shall be directed in a manner to minimize contact with splashing slush and snow under the vehicle, reducing exhaust system corrosion failures. The muffler(s) shall be aluminized, stainless steel, or ceramic coated. Provision shall be made to prevent rain or slush from entering the tailpipe.

17. ACCESSIBILITY.

a. Parts and components shall be located or positioned for rapid and simple inspection and recognition of excessive wear or potential failure. The engine(s) compartment(s) should have a layout to permit routine operational adjustments, servicing, attaching of parts and components, and other daily preventive maintenance by personnel wearing bulky winter clothing. Locks, controls and fasteners shall be designed to prevent overtorquing by operators who lack feeling in their hands when wearing heavy gloves. Parts and components shall be located for ample and rapid access unless performance shall be appreciably degraded by the accessible location. Whenever functional layout of operating components determines that physical and visual interference between items cannot be avoided, the item predicted to require the most maintenance shall be located for best accessibility.

b. Cover Plates. When they must be removed for component adjustment or for component or part removal, they should be equipped with quick disconnect fastenings, or hinged panels providing quick access.

c. Drains, filler plugs, grease fittings, hydraulic lines, bleeders, and checkpoints for all components should be located such that they are readily accessible and do not require special tools for proper servicing. Drain and filler plugs should be bronze, brass or other nonferrous metal.

d. All components shall be designed and protected so that heavy rain, snow, ice and slush will not interfere with normal servicing or operation. Adequate guards shall be provided for rotating components.

SECTION 4. DRIVETRAIN AND COMPONENTS

18. GENERAL TYPES OF DRIVETRAINS. The transmission shall be a continuous drive system, either hydrostatic, manual transmission or automatic powershift transmission type incorporating a torque converter with suitable torque ratio. The torque converter shall not operate at less than 70 percent efficiency to meet the performance requirements specified herein. All of the suitable transmissions shall be matched to the operating characteristics of the carrier engine and will have load ranges to accommodate expected normal operating conditions. If necessary, the vehicle shall be equipped with a transfer case or auxiliary transmission to achieve the required performance. The transmissions shall include a range selector lever with reverse, neutral, and forward positions all clearly identified. The shifting of gears (nonautomatic) in forward speed either up or down through all gear ratios shall be possible without interrupting the output of power from the engine through the drivetrain of the carrier. The transmission shall operate efficiently and without detrimental effects to any components when lubricated in accordance with recommendations of the transmission manufacturer. The continuous drive transmission shall be certified as suitable for use in this vehicle by the transmission manufacturer. Torque capacity of the transmission components shall be adequate to transmit the maximum gross torque of the engine through all gear reductions or torque multiplications. Drivetrains shall be designed to require a minimum number of joints and all components should be of the same power ratings, i.e., no reduction in shaft size to transfer through bulkheads.

19. TRANSFER ASSEMBLY. The transfer case, when required, shall provide positive drive to the front and rear axles. It shall be of a single or multispeed type as required to meet the performance requirements. The multitransfer case may be equipped with a manual front axle disconnect, a center differential with manual or automatic lockout, or an overriding clutch to compensate for difference in travel between front and rear wheels. The case may be integral with the transmission or a separate unit mounted independently and shall be certified as suitable for use in this vehicle by the transfer case manufacturer.

20. AXLES. Front and rear axles furnished shall be certified by the manufacturer as being suitable for use in this vehicle and designed for single or dual tire mounting. The front and rear tread widths shall not vary more than two inches. Axle manufacturer's published rating shall not be raised to conform to the requirements of this specification and shall be at least equal to the load imposed at ground level when the vehicle is loaded to its rated gross vehicle weight: driving axles to be provided with no spin or other retarding

type differential lock to assure a torque transfer to each wheel retaining traction. If manual lockout is required, the lockout control shall be located in the vehicle cab. The torque capacity of each axle and differential shall be at least 10 percent in excess of maximum torque to which the axle could be subjected under any operating condition with the carrier fully loaded. Axle ratings shall be at least equal to the load imposed on each axle, measured at the ground at rated GVW. When driving front axles are incorporated, the axles shall incorporate steering joints of a type that produce no objectionable steering characteristics throughout their range of angular travel with steering joints enclosed in shielded housings. When axles are specified as reduction types, they may be single, double or planetary reduction type.

21. BRAKES/AIR SYSTEM. A braking system which meets the FHWA requirements for similar type vehicles shall be furnished complete with all necessary equipment to safely control the fully equipped and loaded or unloaded vehicle under all operating conditions. The brake mechanism shall be readily accessible to external adjustment. Braking systems shall be complete with all necessary components including the following:

a. Air compressor, unloader-head type, engine driven and engine oil lubricated, air or water cooled, having a capacity of not less than 12 cubic feet per minute.

b. Air storage reservoirs with not less than 2,000 cubic inch total capacity. Each tank shall be equipped with a drain, and with safety and check valves between compressor and last reservoir tank. The total cubic air storage capacity of the system shall not be less than 13 times the volume of the brake actuating chambers in any design. A low air pressure warning device shall be incorporated.

c. Foot control, suspended or treadle type.

d. Limiting valve for front brakes, combined with quick-release valve.

e. Quick-release valve for rear brakes.

f. Moisture ejector or moisture elimination system.

g. Service brakes for small sweepers shall be of the hydraulic type provided on all wheels except towed vehicles and equipped with power/air assistance and shall be capable of meeting the brake tests specified in paragraph 63, page 27.

h. Service brakes for large sweeper vehicles shall be of the full-air or air-over-hydraulic type provided with an air compressor designed to include an unloader head to prevent a buildup of excessive air pressure in the system when the compressor is not in operation.

i. A parking brake operated by a control readily accessible to the driver shall be provided. The parking brake shall be separate from the service brakes.

22. STEERING MECHANISM. The vehicle front wheels shall be equipped with either a standard hydraulic/power assist mechanical or hydrostatic steering mechanism operable from the driver's seat. Steering components shall be installed in a manner to protect them from damage. The steering mechanism shall be capable of easily controlling the sweeper during normal operations with the broom engaged. Access for rapid lost motion adjustment shall be provided.

23. SUSPENSION SYSTEM. Vehicles shall be equipped front and rear with manufacturer's current suspension system having a rated capacity at least equal to the imposed load, measured at ground level, with the vehicle loaded to its rated GVW and with the broom in the transport position. Auxiliary suspension springs may be provided on front and rear axles. When spring capacity is rated at the spring pads, unsprung weight shall be deducted. Ratings shall not be raised to conform to the requirements of this specification, and suspension shall evidence no overload or permanent set. Shock absorbers are not required on large sweepers.

24. WHEELS, RIMS, TIRES AND TUBES.

a. Sweeper Vehicle Wheels. These shall be equipped with single front and single or dual rear wheels. Rim and tire ratings shall conform to the Tire and Rim Association's recommendations for the type and size of tires furnished.

b. Size and Inflation Pressure. Each tire, at recommended inflation pressure, shall have a rated carrying capacity at least equal to the gross load normally imposed on it by the evenly and fully loaded vehicle. Vehicle tires, including spare, shall be interchangeable and of the same size. A tread of a diamond pattern or conventional snow tread is recommended for general service. Tires and tubes shall meet the first line commercial grade requirements.

c. Spare Tire. A spare wheel or rim with tire and tube for the propulsion vehicle included shall be provided; however, provisions shall not be made to mount the wheel or rim on the vehicle.

SECTION 5. HYDRAULIC SYSTEM

25. GENERAL. The hydraulic system shall consist of rams, pumps, piping, fittings, valves, controls, fluid reservoirs, fluid filters, and all other parts essential to efficient operation. The system shall be capable of positioning the hydraulic actuated equipment in any chosen position within the design limits of travel, and shall be of such capacity that all controls can be operated simultaneously without noticeable reduction in response. All hydraulic controls for operating the broom and blower shall be located in the carrier cab. Hydraulic system shall be constructed to withstand all loads imposed in snow removing operations without the use of mechanical locks. Filtration of the hydraulic system shall conform to Society of Automotive Engineers (SAE) J931.

26. HYDRAULIC PUMP AND POWER TAKEOFF. Pump shall be of heavy duty type, direct driven by the carrier/drive engine and shall have sufficient capacity to operate all hydraulic equipment specified herein under all operating conditions and speeds.

27. HYDRAULIC LINES AND FITTINGS. Hydraulic tubes, hoses, and fittings conforming to commercial quality for existing pressures shall be used. A minimum number of fittings, joints, and connections shall be used to prevent excessive back pressure, vibration, and leakage. Hydraulic lines shall be of sufficient size to permit free flow of hydraulic fluid at temperatures down to -40° F.

28. HYDRAULIC FLUID TANK AND COOLER. The hydraulic fluid tank shall be equipped with a filler neck with strainer, drain plug, and shutoff valve. When nonsealed system is used, an air vent shall be incorporated. Baffles as required shall be provided. The tank capacity shall be adequate to hold not less than 120 percent of the volume of oil required for operation of any combination of attachments. Hydraulic oil pressure and oil level indicators shall be provided. Hydraulic oil cooler shall be provided if system operating temperatures are excessive during normal operation.

29. BROOM LIFT SYSTEM. Lift system shall be designed for a minimum lift capacity of 20 percent greater than the rotating brush weight.

30. WINTERIZATION OF THE HYDRAULIC SYSTEM. Winterization shall be based on meeting the same (lower) temperature requirements as the engine system. This includes heating devices for the hydraulic oil tanks, piping, valves, pumps, etc., and insulating compartments housing these system units so that the trucks can continue in operational status during prolonged periods of freezing temperatures described in the cooling system winterization preparations.

SECTION 6. ELECTRICAL SYSTEM COMPONENTS

31. GENERAL. The electrical system and devices shall be negative ground and be installed in accordance with the best modern practices for the type of service required. When applicable, generator, alternator, starting device, ignition distributor and coil shall be of waterproof type, easily accessible, securely mounted and protected against excessive heat. All electrical circuit wiring shall be made with stranded conductors of a carrying capacity commensurate with the anticipated maximum circuit loading with insulation in accordance with the recommended standards of the Society of Automotive Engineers for such loading at the potential employed. Overall covering of conductors shall be of weatherproof type. All connections shall be made with lugs or terminals mechanically secured to the conductors. Wiring shall be thoroughly secured in place and suitably protected against heat, snow, oil, and physical damage where required. Circuits shall be provided with suitable overload protective devices. Such devices shall be readily accessible and protected against excessive heat, physical injury, water, snow and salt corrosion.

32. POWER SUPPLY. An electric alternator or generator of not less than 80 ampere capacity shall be provided. It shall have an output adequate to exceed the full anticipated electrical load and be provided with full automatic regulation. When receptacles or other facilities providing 110-volt A.C. or D.C. power are installed, such receptacles or other facilities shall be of weatherproof type and circuits or associated wiring shall have, at the source of 110-volt supply, overload protection rated at the carrying capacity of the conductor. The 110-volt A.C. power supply is for energizing the engine jacket water heater, oil pan heater, or battery pad heater, as required.

33. BATTERIES. Batteries shall be securely mounted and adequately protected against physical damage, water spray, and engine and exhaust heat. If an enclosed battery compartment is provided, it shall be adequately ventilated and the batteries be readily accessible for examination, test, and maintenance. Battery capacity shall be compatible with the size of the engine and the anticipated electrical load, or 150 ampere hour rating at a 20-hour discharge rate for a 12-volt small vehicle system. When a dual battery system is supplied, each battery shall be of the capacity required for a single battery system. One receptacle shall be provided for charging all batteries.

34. STARTING DEVICE. An electrical or pneumatic starting device shall be provided. Their characteristics are as follows:

    a. Electric Starting. The electrical starting device shall be such that the current draw, when operating under maximum load, will

not introduce a voltage drop sufficient to adversely affect the function of the ignition system or other electrical equipment.

b. Pneumatic Starting. The pneumatic starting system shall utilize the brake system air compressor as the source of compressed air. The system shall include a cranking motor, air reservoir of not less than 11 cubic feet volume, filter and all necessary piping and valves.

35. IGNITION SYSTEM FOR GASOLINE ENGINES. Ignition shall be of the battery supplied distributor and coil type in connection with a single set of spark plugs. Transistorized ignition shall be supplied as desired.

36. BATTERY CHARGING CONNECTION. A waterproof plug for charging the battery shall be provided and mounted on the rear of the vehicle.

37. LIGHTING SYSTEM. The lighting system, including reflectors and clearance lights, shall be the manufacturer's current standard provided the equipment, when desired by the purchaser, shall meet the FHWA's Motor Carrier Safety Regulations and local highway requirements. The system shall include:

a. Headlights. Two or more sealed-beam headlights with upper and lower driving beams and a foot or hand controlled switch for beam selection. (Fender or body mounted.)

b. Dual Taillights and Dual Stoplights.

c. Turn Signals. Front and rear, conforming to Society of Automotive Engineers' (SAE Turn Signal Units, Type I, Class A) having self-cancelling control with a visual and audible indicator and switch to flash all lights.

d. Spotlight. Six-inch spotlight on cab roof or side of the windshield, hand-adjustable type, with controls for beam adjustment inside the vehicle cab.

e. Reflectors, markers, and clearance lights installed in conformance with FHWA's Motor Carrier Safety Regulations. The clearance lights should be equipped with lenses of the commercial truck type.

f. Engine compartment lights, arranged to adequately illuminate both sides of the engine(s), with switches located in the engine compartment(s).

g. Backup Lights. At least two six-inch backup lights installed at the rear of the vehicle. Lights shall automatically light up when transmission is shifted into reverse. Alternate installation can be made on wing frames if desired.

38. COMMUNICATIONS EQUIPMENT. Complete provision shall be made for installation of a two-way radio communications system.

SECTION 7. OPERATOR'S CAB

39. GENERAL. An all metal or fiberglass constructed fully enclosed cab of the conventional or forward design shall be furnished. The surfaces and floor of the cab shall be insulated. The engine and driver's compartment shall be separated by insulation. The cab roof is to be provided with gutters. The cab shall have a hinged door on each side providing easy access. Running boards, cab steps, and assist handles and bars shall be ample size and design to insure safety and easy entrance and exit of both sides of the cab for personnel wearing bulky artic overshoes, mittens and outer garments. All step surfaces on the exterior of the cab shall be of the nonskid, open grated type.

40. CAPACITY. Seating shall be provided for the driver. The driver's seat shall be easily adjustable up and down, fore and aft, a minimum of three inches. If desired, a cab suitable for seating of two persons may be specified.

41. SEATS. Seats shall be fully upholstered with a good quality upholstery over foam rubber cushions. Approved, properly installed seat belts for the occupants shall be provided. The cab shall be provided with sun visors of a type that will afford the operator sun protection. Cab ventilators shall be screened and shall be located to minimize entry of snow.

42. WINDOWS. All glass shall be of the laminated safety plate type located to minimize blocking by obstructions affecting visibility. The windshield shall be equipped with dual two-speed electric or air wipers or rotary windshield sector similarily controlled and powered which shall sweep a clear view over the entire windshield. A windshield washer of the one-gallon size shall be provided and properly installed.

43. MIRRORS. Two outside rear view mirrors, of the extension arm "westcoast" type having an area of not less than 60 square inches, shall be provided; one mounted on either side of the cab and each with at least three supporting arms. For optional heated mirrors see paragraph 67, page 29.

44. HEATER/DEFROSTER. A heater/defroster system with selectable functions shall be provided which will generate approximately 200 BTU output per cubic foot of cab volume, with blower capacity per minute approximately equal to cab volume. System shall contain a snow-free, fresh air intake and if the windshield is not heated, defroster ducts to the windshield. The heating system shall in any case be able to maintain a cab temperature of 55° F. at ambient temperatures of -20° F.

45. INSTRUMENTATION. The cab shall be provided with an instrument panel or pedestal equipped with instruments and controls located in full view of and for convenient operation by the operator. All instruments and controls shall be labeled in a manner to remain legible for the life of the carrier, to indicate function, and be illuminated by rheostat controlled lighting for night operation. All instruments and controls necessary for proper operation of the sweeper unit and the broom/blower and the drive engine(s) shall be provided and shall, as a minimum, include the following:

a. Ammeter or voltmeter for sweeper and carrier engines.

b. Fuel Level Gauge(s).

c. Lubricating oil pressure gauges for carrier and broom/blower drive engine(s).

d. Engine coolant temperature gauges for carrier and broom/blower drive engine(s).

e. Speedometer with recording odometer.

f. Tachometer(s) for carrier and broom/blower drive engine(s).

g. Brake-air reservoir pressure gauge when required.

h. Low air pressure warning, visual and audible type when required.

i. Light switches and headlight beam indicator.

j. Starting controls for carrier and sweeper engines.

k. Torque converter oil temperature and pressure gauges when required.

l. Cranking system air reservoir pressure gauge (pneumatic cranking only).

m. Hydraulic oil pressure and temperature gauge (if applicable).

n. Carburetor choke when required.

o. Hydraulic Level Gauge.

p. Audible overheat alarms (hydraulic and engine oil) when required.

SECTION 8. SHEET METAL COMPONENTS

46. CAB/BODY/ENGINE COMPARTMENTS. The cab/body/engine compartments shall be fabricated from aluminum, fiberglass or steel designed to provide the lightest weight consistent with the strength necessary for maximum durability. Body shall fully enclose all engine(s) and mechanical components. Self-tapping bolts shall not be used in construction of sheet metal components. These components shall be of rain, snow and dust proof construction and be equipped with doors having continuous piano-type hinges with brass pins or equivalent, and chrome-plated, snap-type locks with semiflush handles, or similar positive locking devices.

a. Steps. Steps shall be located on each side of the cab, and shall be provided as required for ascending or descending from the vehicle. All steps shall be of four-way safety tread design.

b. Blower Ducts. Body mounted blower ducts shall be securely fastened to body structural members and shall not interfere with compartment accessibility.

c. Walkway shall run for necessary access distance of body and shall be of four-way safety tread design.

d. Handrails. Rigidly attached handrails or guardrails of suitable metal tubing not less than 1¼ inches in diameter shall be provided as required for personnel safety at all steps, walkways, and stations. Handrails or guardrails of a material other than stainless steel shall be chrome plated or otherwise protected against corrosion.

e. Fenders. Provision shall be made for fenders to prevent wheels from throwing snow on windshield.

f. Mudflaps, when necessary to prevent debris throwing, shall be the nonsail type.

g. Drains, plugged or open, shall be provided on all body and compartment locations where free-standing water can collect. The open drains shall not drain onto locations anticipated to be occupied by personnel during normal operations.

47. COMPARTMENT DOORS. Doors shall have positive closing mechanisms. Top-hinged compartment doors shall be held in the open and closed positions by spring-loaded, telescoping support arms, and latches shall be provided.

The doors shall be easily opened or closed and shall not rattle during travel. The doors shall be counter-balanced where necessary by means of springs or shall be divided horizontally, if required, to facilitate easy and safe handling.

SECTION 9. SWEEPER AND COMPONENTS

48. GENERAL. The self-propelled airport runway sweeper may be either a pushed or towed type, a conventional or cab-over type chassis and of single or dual engine construction. For the purpose of this advisory circular, all types of sweepers shall be considered an integral part of the vehicle. The sweeper unit shall be designed to withstand hard usage, cold climates, long service hours and the parts, materials and construction techniques shall conform to the best industrial engineering practices. A sweeper of proper design shall not bounce or skip when operated at the rated snow removal speed. When desired, an appropriate air blower may be incorporated into the design to help dry pavement and accelerate movement of snow and slush.

49. PUSHED TYPE SWEEPER. May be of any suitable design pushed by either a conventional or raised cab propulsion vehicle. The sweeper may have either one, two or four caster wheels, dual or single engine(s) and may incorporate an engine driven air blower. This type unit precedes the vehicle and allows the operator to directly observe the area being swept. Sweepers without caster wheels shall have suitable front frame hitch and hydraulic down pressure and lift system with adjustment mechanism.

    a. Frame shall be fabricated of heavy gauge tubular or channel section steel, reinforced as required to prevent loading distortion. Adequate cross section modulus shall ensure no torsion distortion during normal operation. Provisions shall be made for attaching engines, vehicle hitches, drives, casters, controls, broom mounts, and other hardware needed for operation.

    b. Caster System. Casters when installed shall be of the full 360° revolving type, with hydraulic or friction shimmy dampers as needed and incorporating swivel detent locks if specified. Hubs must be demountable with steel rims. Tires shall be a minimum of eight ply for increased resistance to extreme side turning loads. The tires shall be pneumatic or semi-pneumatic as required.

    c. Engine Location. The broom may be driven by the vehicle propulsion engine, by a second engine carried on the vehicle, or use an engine integrally mounted on the broom chassis.

d. Blower System Location. The blower, when specified as a sweeper augmentation system, may be located as an integral component on the sweeper chassis or placed in a central location on the push vehicle chassis. Blower requirements are listed in optional equipment paragraph 52, page 23.

e. Vehicle Push Mount. Mount shall be capable of sustaining all normal operating loads including side loads. The push mount shall not induce bounce or oscillatory motion into the sweeper and shall permit normal operational turning without binding or sweeper damage.

50. TOWED TYPE SWEEPER may be of any suitable design pulled by a conventional cab propulsion vehicle. The sweeper may have noncaster, castering, or a combination of wheels depending on configuration and shall incorporate a suitable undercarriage designed to provide optimum sweeper towing characteristics.

a. Frame shall be fabricated of heavy gauge tubular or channel section steel, reinforced as required to prevent loading distortion. Adequate cross section modulus shall ensure no torsion occurs during normal operation. Provisions shall be made for attaching engines, vehicle hitches, drives, casters, controls, broom mounts, and other hardware needed for operation. The frame front section torque member may be removable for ease in storage or shipping. The tow car shall be connected to the front frame section through heavy-duty swivel kingpin. The towbar shall be fitted to a heavy duty front wheel fork and shall elevate for easy adjustment to various tow angles.

b. Wheels and Steering. The noncastering wheels shall be the heavy duty automotive type with pressed steel rims and hubs. Tires shall be heavy duty pneumatic type. Front wheel steering shall be accomplished by a positive connection to front steering fork from the towbar. The front steering fork shall be fitted with tires and wheels identical to the noncastering wheels.

c. Engine Location. The broom and blower shall be driven by an integral engine located to provide a low center of gravity and optimum towing characteristics.

d. Blower System Location. The air blower, when specified as a sweeper augmentation system, shall be located as an integral component on the sweeper chassis. The blower shall be placed to ensure good towing characteristics while maintaining rated blower performance. Blower requirements are shown in the optional equipment section, paragraph 52, page 23.

e. Towbar and Vehicle Hitch. A tubular type towing bar is recommended. The towing bar shall have a swivel-type hinge and shall be adaptable to a pintle, ball type hitch or a drawbar. A safety chain and hook assembly shall be provided. The towbar shall be directly attached to the front steering fork to provide positive steering.

51. COMMON EQUIPMENT. Applies to pushed/towed types. See Figure 3, page 33.

a. Control, Safety and Instrumentation System. Controls and instrumentation shall be accessible in the operator's cab and have the following functions: engine stop/start, brush and engine speed throttle, broom angle control, blower control, blower nozzle control (when equipped), broom/blower lift and necessary instrumentation system for broom operation. For required instrumentation, see instrumentation paragraph 45, page 17.

b. Hydraulic System. Broom angle, broom lift, blower lift, broom and blower may be hydraulically actuated and driven. All hydraulic systems shall conform to the applicable specifications in vehicle hydraulic section 5, page 13.

c. Brush Drive Train. The brush drive system may be hydrostatic or mechanical from the brush drive engine or vehicle powerplant. Universal joints, reduction gearing, clutches, sprockets, chains, pumps and drive motors shall be installed as required by either system.

d. Brush System. Brush shall be the rotating horizontal cylinder, replaceable core type with bearings and supports at both ends. The brush may be driven from either end, center or from both ends, with a final drive system of geared, hydrostatic or chain and sprocket design. When a chain type final drive is used, adjustable idlers shall be installed to compensate for wear slack. Appropriate easily removed driveline shields shall be installed as required. Means for easy field replacement of brush inserts shall be provided. Provision shall be made for operator to vary broom speed by a remote control in the operator's cab. The core should be reversible end to end. Brush shall be capable of varying rotational speeds to a maximum exceeding 600 rpm to compensate for brush wear.

e. Brush Inserts. Brush wires shall be galvanized or rustproof alloy steel designed for long wear, cold weather, and maximum flicking action. Replacement inserts may be either the bar strip or radial wafer type, designed with appropriate spacers for maximum

ease of replacement without special hand tools. Brush design may be of either the tufted wire or continuous wire type. The brush wires shall be crimped, threaded or otherwise suitably fastened to the insert backing in such a manner to minimize bristle loss. Wire bristles should not be less than .015 inch in diameter and construction should meet all requirements of MIL-S-27178B.

f. Brush Angularity System. Sweeper brush shall have a remote operator selectable angling capability. Brush shall swing 30° left or right minimum travel from the transverse position and have the necessary degree of freedom to follow the pavement while sweeping either left or right at the rated sweeping speed. Brush shall sweep the same path whether angled left or right. Brush angling mechanism shall be hydraulically actuated.

g. Brush Elevation Mechanism. Brush shall be equipped with a remotely actuated hydraulic elevation mechanism providing adequate ground clearance for transport when not in use and appropriate down pressure to produce the most effective broom pattern.

h. Brush Wear and Leveling System. An automatic or easily accessible fine height adjustment shall be provided to compensate for brush wear. The adjustment, when preset, shall act as a stop for the remote elevation mechanism. Increasing brush speed shall compensate for the wearing down of the brush diameter.

i. Brush Hood Cover. The brush hood shall be fabricated from heavy gauge sheet alloy steel and securely bolted to brush frame. It shall shield the top half of the brush completely and shall include provisions for mounting a snow deflector on the front of the hood. The hood shall be of a nonclog design to prevent ice buildup during freezing slush removal operations at rated speeds. Brush hood shall provide the necessary quick access to brush for replacement of worn brush sections and inspections.

j. Deflector System. A snow deflector shall be mounted on the front of the brush hood. The deflector shall have the ability to positively change the angle that snow leaves the brush. The deflector shall be readily adjustable at the sweeper or remotely adjustable in the operator's control cab. The remote adjustment shall be by hydraulic means.

k. Broom Accessibility and Safety Devices. Carrier vehicle paragraph 17, page 9 shall apply.

l. Engine. If dual engine, the provisions of carrier vehicle section 3, page 6, shall apply.

m. Drivetrains, Transmissions, Transfer Assemblies. Drive shafts, universal joints and mechanical units shall not depart from driveline rotation planes at excessive angles (greater than 15°) during normal lifting or tilting operations of the broom. Provisions of the carrier vehicle section 4, page 10, shall apply to all driveline components.

52. OPTIONAL EQUIPMENT. The following options may be included if the purchaser's requirements so warrant these items.

a. Air Blower. Shall be mounted on the sweeper body or carried integrally as part of the carrier vehicle. The blower shall be capable of discharging air at a minimum of 6,000 cubic feet per minute. The blower nozzle control shall be directional, left, right or off, and interlocked with the broom head angle to always blow in the direction of broom casting. The controls shall be remotely operated from the cab. A system for raising the nozzles for travel shall be provided. The blower shall be the centrifugal type, single or double inlet, and outlet.

b. Blower Drive System. May be driven by hydraulic system, mechanical drive shaft, or direct coupling. An operator controlled blower drive disconnect shall be installed to permit blowing without broom operation. Alternatively, remotely operated doors may be fitted to nozzles to stop blower airflow.

c. Quick disconnections may be provided for all controls, hydraulic hoses/lines, electrical cables, drivelines, and instrumentation.

d. Foam filled caster tires may be provided to increase tire resistance to side loads during tight turns. Foam filling may be of the urethane type or similar materials.

e. Dual front fork wheels (towed sweepers only).

f. Towed vehicle equipment may include side marker lights, rear lights, flasher, sealed beam type headlights, stoplights, and turn signals.

g. Caster fenders of noncorrosive materials.

h. Self-leveling brush options to increase brush life.

i. Special balance counterweights (towed sweepers only).

SECTION 10. MISCELLANEOUS RECOMMENDATIONS

53. PAINT AND ANTI-CORROSION TREATMENT.

a. The vehicle and sweeper shall be cleaned, treated and painted in accordance with the best commercial practice.

b. The cab, broom/blower compartments and all accessories not covered above shall be cleaned, primed, puttied, sanded and painted with not less than two coats of solid chrome yellow enamel or a substitute color as desired by the purchaser. Anti-corrosive paint is recommended.

c. The finished paint shall be free of "fisheye", "orange peel," chips or runs and other imperfections that detract from the vehicle's appearance.

54. VEHICLE AND SWEEPER IDENTIFICATION. A revolving yellow beacon of size (normally 10" minimum) appropriate to the size of vehicle is to be mounted on the uppermost part of each vehicle and towed type sweeper and shall have:

a. Three hundred and sixty degrees azimuth coverage.

b. Effective intensity in the horizontal plane not less than 40 or more than 400 candles.

c. The beam spread measured to 1/10 peak intensity extending from 10 degrees to 15 degrees above the horizontal.

d. Sixty to ninety flashes per minute.

55. NAMEPLATES AND INSTRUCTION PLATES. All nameplates and instruction plates shall be metal or plastic with the information engraved, stamped, or etched thereon. If metal, they shall be made of a noncorrosive material, chrome plated, or nickel silvered. These plates shall be attached with screws, bolts, or rivets. Each plate shall be mounted in a conspicuous place.

a. Plastic plates shall not be used in exposed positions where they are subject to weathering.

b. Nameplates shall show make, model, serial number, and other such data as to positively identify the item.

56. HOURMETERS. Hourmeters with a zero to 9999 range shall be provided to record hours of each engine operation. The hourmeters shall be mounted on the truck and sweeper so that they can conveniently and easily be read by personnel servicing the truck and sweeper.

57. HOT WEATHER ROADABILITY. At an ambient temperature of 90° F., the sweeper/vehicle shall have the capability of being driven a minimum of five miles at a speed of 40 miles per hour, without any component exceeding its normal operating temperature.

58. TECHNICAL PUBLICATIONS. The contractor shall furnish two sets of the following publications in accordance with standard commercial practices applicable to the vehicle (including sweeper/blower and special equipment) furnished under the contract. Each set shall be composed of one copy each of:

a. Operator's manual with lubrication charts.

b. Parts Manual. All parts not of original fabrication by the vehicle or sweeper manufacturer shall be listed by the original manufacturer's name and number as well as the sweeper/vehicle manufacturer's number.

c. Maintenance service manual shall include specifications and procedures to ensure that routine maintenance service can be performed by nonspecialist service personnel.

59. TOOLS. Any tools peculiar to the servicing of the vehicle, sweeper and any of the auxiliary equipment shall be furnished with the vehicle.

60. ACCESSORIES. The vehicle shall be equipped with the following accessories installed in a built-in or permanently affixed readily accessible compartment with lock.

a. Tire tools with lug wrench;

b. Jack (capacity suitable for vehicle GVW);

c. Shear pins, if applicable; and

d. Other tools specific for operation or maintenance of particular vehicle supplied.

In addition, the sweeper shall be supplied with one sweeper spare tire when different from propulsion vehicle, and one caster tire with the rim unmounted.

61. INSTRUCTION AND TRAINING. The contractor shall, at no additional cost, furnish trained personnel at time of delivery to place the equipment into operation and provide a minimum of twenty-four (24) hours of training for airport personnel in its operation and maintenance.

CHAPTER 3. QUALITY ASSURANCE PROVISION

62. GENERAL. The contractor shall be responsible for the performance of all inspection requirements as specified herein. Except as otherwise specified, the contractor may utilize his own or any other inspection facilities and services. Records of inspections and tests shall be maintained by the contractor. Copies of these records shall be provided the purchaser. The purchaser shall perform any of the inspections set forth in the specification where such inspections are deemed necessary to assure contractor compliance with the specification requirements.

63. INSPECTION AND TEST PROCEDURES. These tests will be conducted at purchaser's location by the vehicle manufacturer's representative.

a. Operational Tests. During these tests, the functioning of the broom, engine, power train, blower system, hydraulic system, brakes, steering, lighting system, controls, and instruments shall be observed. The vehicle shall be fully loaded as to its rated GVW and with the broom in transport position shall be operated:

(1) 15 miles over hard surfaced roads at maximum speeds not less than 40 mph.

(2) One hour at not more than ten mph over all types of terrain encountered at airports.

b. Brake Tests.

(1) Bring the vehicle and sweeper at GVW to five complete, successive stops within 50 feet from 20 mph, using service brakes only, on dry, hard pavement free from loose material. Sweeper hitches should not vibrate or release, and towed sweepers should not swerve excessively or fail to track satisfactorily.

(2) Bring the vehicle and sweeper to a complete stop from 20 mph and hold on the maximum grades at the airport, using hand brakes only.

c. Radio Interference. Vehicle shall not produce radio interference that disturbs normal airport navigation/communication capabilities.

64. FIRE EXTINGUISHER. When specified, fire extinguisher(s) shall be provided. Such extinguisher(s) shall be mounted so as to be readily accessible to the operator. Type, size, and quantity of extinguisher(s) shall be as specified by the purchaser.

65. PREPARATION FOR DELIVERY.

a. Domestic Shipment. The vehicle, sweeper and its accessories, spare parts, and tools shall be packed in such a manner as to insure acceptance and safe delivery to the designated point.

b. Marking. Marking for shipment shall be in accordance with instructions issued by the purchaser.

66. AUXILIARY EQUIPMENT. When sweeper system is mounted on propulsion vehicle as a nonintegral component, sweeper engine (if dual engine) shall be easily demountable to facilitate repair/removal. Sweeper/blower shall be mounted on vehicle front using the manufacturer's standard hitch. When sweeper broom is removed from vehicle, sweeper driveline shall not interfere with normal operation of the carrier vehicle.

67. OPTIONS. The following options may be included if the purchaser's requirements so warrant these items.

a. Low Temperature Options.

(1) Engine jacket water heater (750 or 1,000 watt unit).

(2) Engine oil pan heater (750 or 1,000 watt unit).

(3) Battery warmer pad (250 or 500 watt unit).

b. Battery charger (built in and installed on carrier or towed sweeper) trickle type 1-6 amps at 12 volts or equivalent.

c. Bostrom "T" seat, or equivalent, on the driver's side.

d. Bostrom "T" seat, or equivalent, on the passenger's side.

e. Windshields.

(1) Heated windshield (left-hand or right-hand or both sides).

(2) Nontinted windshields (tinted windshields may be specified as desired).

f. Backup Alarm (when not included with vehicle).

g. Systems (special start).

(1) Cold starting system (ether).

(2) Dual battery system.

h. Heated Outside Rear View Mirrors.

i. Air Horn.

j. Radio transceiver, two-way VHF for radio communications on appropriate ground control, unicom, flight service station, and maintenance base complete with antenna and remote speaker. COMCO 730 (3 channels or equal).

k. Left-Hand and Right-Hand Door Lights.

l. Rotating or strobe beacon if different from recommended standards beacon.

m. Windows.

(1) Extra windows installed to improve driver visibility on either side of cab.

(2) Sliding windows.

(3) Heated rear or front windows.

n. Larger radiator, frontal area, core size.

o. Larger alternator, specify type drive, amperes _____ voltage _____

p. Fuel Tanks.

(1) 50 gallon left-hand or right-hand installation.

(2) 60 gallon left-hand or right-hand installation.

(3) 75 gallon left-hand or right-hand installation.

(4) 200 gallon left-hand and/or right-hand installation.

Separate fuel gauges and cross connections to tanks may also be provided.

q. Mud or anti-splash flaps, if different from standard.

r. Rotary Windshield.

s. Manual override feature on radiator shutters.

t. Warning signal plus indicator light on dashboard when parking brake is in use.

u. Vehicle chassis and accessory options.

(1) Attachments or provisions for integral or pushed plow blades.

(2) Tire chains for off-runways and soft ground use.

(3) Vertical guide vanes fixed, one to each front corner of broom hood.

68. WARRANTY. The manufacturer, contractor, or bidder must guarantee in writing that for a period of one year from the date of delivery he will at his own expense and without expense to the purchaser replace all failed parts and make all repairs that may be required by reason of defective design, workmanship or material in any part of the assembly of the sweeper, vehicle and associated components. Tires, batteries, electric lamps and other devices subject to normal deterioration shall not be included in this warranty.

Vehicle GVW & Horsepower Rating

Gross Vehicle Weight. The gross vehicle weight (GVW), including weight of the complete chassis and cab with all attachments, accessories, and equipment required by this specification; body; rated payload; and full complement of fuel, lubricants, coolant, and operating personnel, shall be as shown for each class vehicle shown below. The gross vehicle weight rating shall not exceed the sum of the axle manufacturer's certified load ratings for the axles used. The manufacturer's advertised gross vehicle weight rating shall not be arbitrarily raised to meet the requirements of this specification.

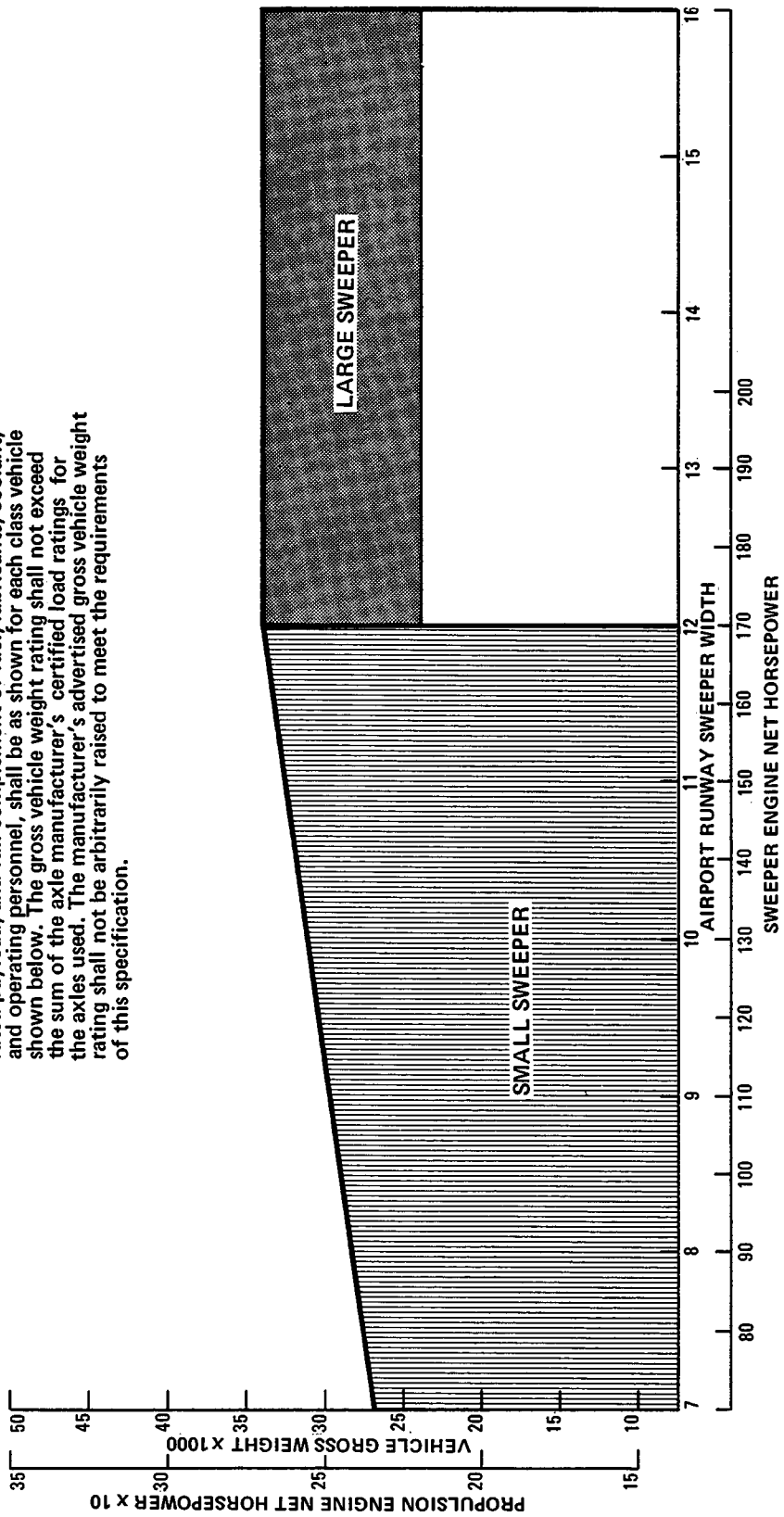

APPROPRIATE VEHICLES SHOULD BE SELECTED FROM WITHIN REGION OF SCREENED AREA, BROOMS WITH SWATH TO 18 FEET SHOULD HAVE A GVW OF APPROXIMATELY 50,000 LBS.

Fig. 1

- TYPICAL SWEEPER TYPES -

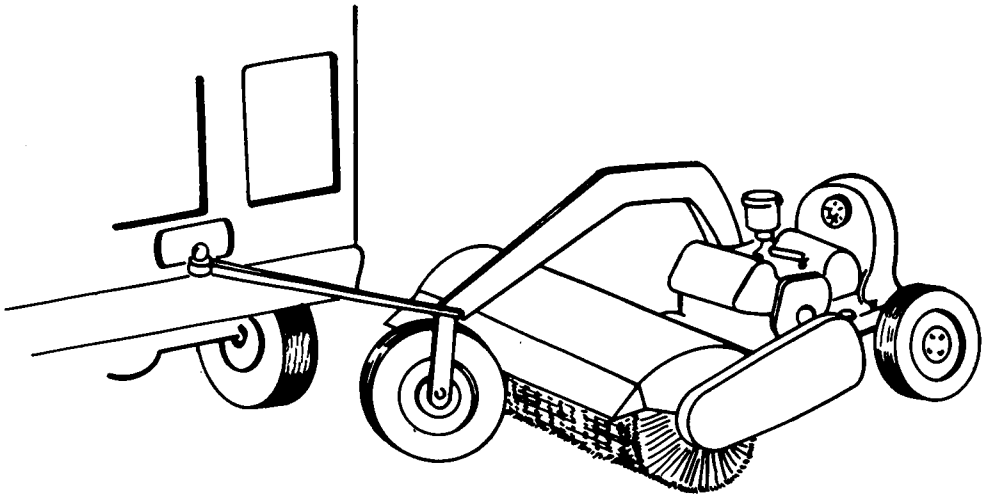

SMALL SWATH. LIGHT DUTY 12 FOOT SWATH TOWED TYPE
WITH INTEGRAL BLOWER

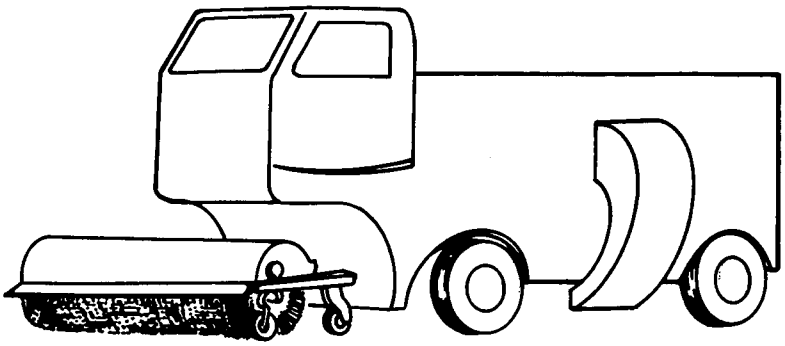

LARGE SWATH, HEAVY DUTY - OVER 12 FEET - PUSHED TYPE
WITH INTEGRAL ENGINE & REAR BLOWER - RAISED CAB

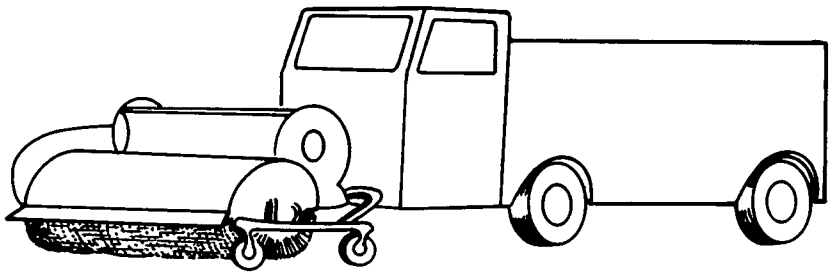

LARGE SWATH HEAVY DUTY - OVER 12 FEET - PUSHED TYPE WITH TWO ENGINES,
FRONT BLOWER - CONVENTIONAL CAB

Fig. 2

SWEEPER LAYOUT

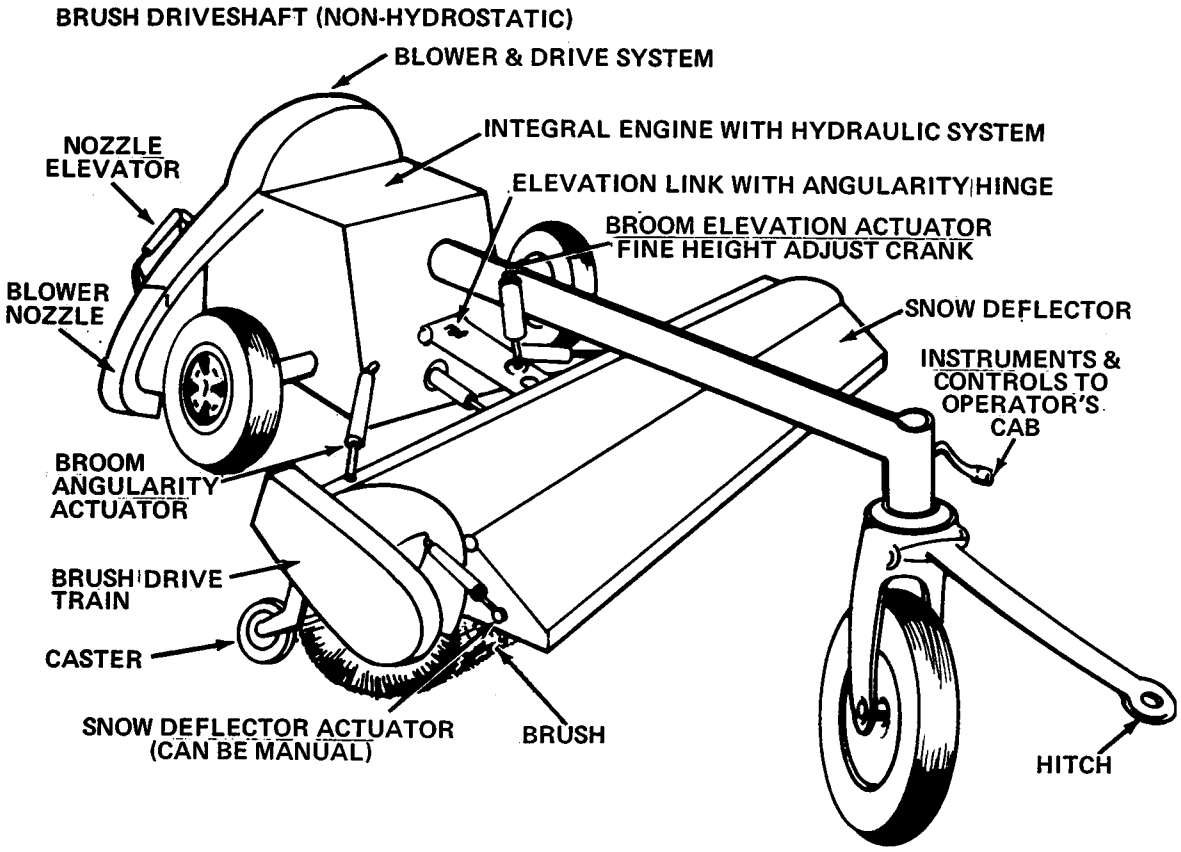

GENERAL LAYOUT OF TOWED TYPE BROOM SHOWING COMMON SWEEPER COMPONENT & TYPICAL CONSTRUCTION FEATURES OF MOST SWEEPER TYPES (PUSHED & TOWED)

BRUSH REPLACEMENTS

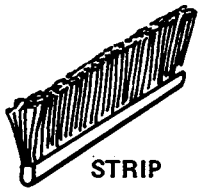

STRIP

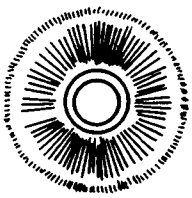

WAFER

Fig. 3

MEASUREMENT CONVERSION TABLE

U. S.		METRIC
1 Foot	=	.3 Meters
1 Cubic Foot	=	.028 Cubic Meters
1 Inch	=	2.5 Centimeters
1 Cubic Inch	=	16 Cubic Centimeters
1 MPH	=	1.6 KM/HR
1 LB/FT^3	=	16 KG/M^3
1 Ton	=	.93 Metric Tons
1 Ton/Hr	=	.93 Metric Tons/Hr
1 Gallon	=	3.8 Liters
$(^oF)-32 \times 5/9$	=	^oC

*U.S. G.P.O.:1993-343-273:80124