U.S. Department
of Transportation

**Federal Aviation
Administration**

AIRPORT DESIGN

/INCORPORATES CHANGES 1 THRU 5/

AC: **150/5300-13**
Date: **9/29/89**

Advisory Circular

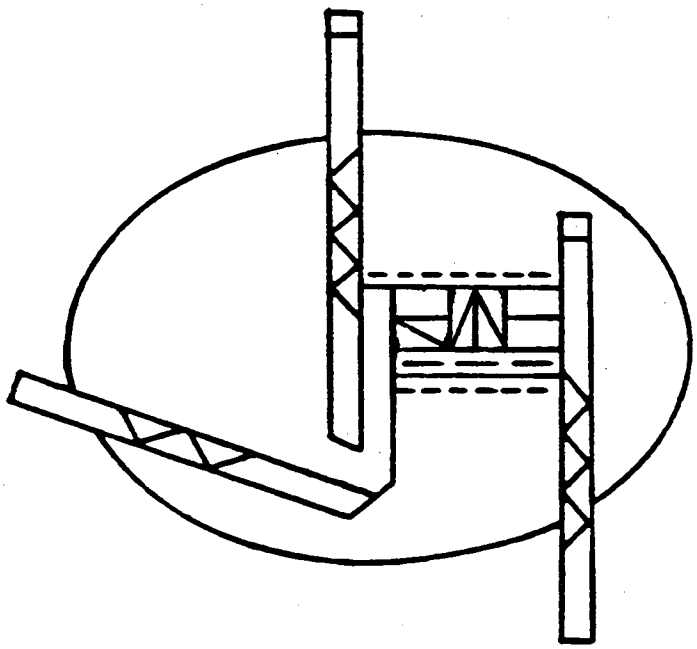

U.S. Department of Transportation
Federal Aviation Administration

Advisory Circular

Subject: AIRPORT DESIGN

Date: 9/29/89
Initiated by: AAS-110

AC No: 150/5300-13
Change:

1. PURPOSE. This advisory circular (AC) contains the Federal Aviation Administration's (FAA) standards and recommendations for airport design.

2. CANCELLATION. This (AC) cancels the following publications:

a. AC 150/5300-2D, Airport Design Standards--Site Requirements for Terminal Navigational Facilities, dated March 10, 1980.

b. AC 150/5300-4B, Utility Airports--Air Access to National Transportation, dated June 24, 1975.

c. AC 150/5300-12, Airport Design Standards--Transport Airports, dated February 28, 1983.

d. AC 150/5325-5C, Aircraft Data, dated June 29, 1987.

e. AC 150/5335-2, Airport Aprons, dated January 27, 1965.

3. APPLICATION. The standards and recommendations contained in this advisory circular are recommended by the Federal Aviation Administration for use in the design of civil airports. For airport projects receiving Federal grant-in-aid assistance, the use of these standards is mandatory. At certificated airports, the standards and recommendations may be used to satisfy specific requirements of Federal Aviation Regulations (FAR) Part 139, Certification and Operations: Land Airports Serving Certain Air Carriers, Subpart D.

Leonard E. Mudd
Leonard E. Mudd, Director
Office of Airport Safety and Standards

For sale by the U.S. Government Printing Office
Superintendent of Documents, Mail Stop: SSOP, Washington, DC 20402-9328
ISBN 0-16-042629-4

CONTENTS

Paragraph Page

Chapter 1. REGULATORY REQUIREMENTS AND DEFINITION OF TERMS

1. GENERAL 1
2. DEFINITIONS 1
3. RELATED/REFERENCED READING MATERIAL 3
4. AIRPORT REFERENCE CODE (ARC) 4
5. AIRPORT LAYOUT PLAN 5
6. MODIFICATION OF AIRPORT DESIGN STANDARDS TO MEET LOCAL CONDITIONS 5
7. NOTICE TO THE FAA OF AIRPORT DEVELOPMENT 5
8. NOTICE TO THE FAA OF PROPOSED CONSTRUCTION 6
9. FAA STUDIES 6
10. FEDERAL ASSISTANCE 6
11. ENVIRONMENTAL ASSESSMENTS 6
12. STATE ROLE 6
13. LOCAL ROLE 6
14. to 199. RESERVED 6

Chapter 2. AIRPORT GEOMETRY

200. INTRODUCTION 9
201. PRINCIPLES OF APPLICATION 9
202. RUNWAY LOCATION AND ORIENTATION 9
203. ADDITIONAL RUNWAYS 10
204. TAXIWAY SYSTEM 10
205. AIRPORT APRONS 10
206. SEPARATION STANDARDS 10
207. PARALLEL RUNWAY SEPARATION--SIMULTANEOUS VFR OPERATIONS 11
208. PARALLEL RUNWAY SEPARATION--SIMULTANEOUS IFR OPERATIONS 11
209. RUNWAY TO PARALLEL TAXIWAY AND TAXILANE SEPARATION 12
210. BUILDING RESTRICTION LINE (BRL) 12
211. OBJECT CLEARING CRITERIA 12
212. RUNWAY PROTECTION ZONE (RPZ) 13
213. to 299. RESERVED 13

Chapter 3. RUNWAY DESIGN

300. INTRODUCTION 21
301. RUNWAY LENGTH 21
302. RUNWAY WIDTH 21
303. RUNWAY SHOULDERS 21
304. RUNWAY BLAST PAD 21
305. RUNWAY SAFETY AREA (RSA) 21
306. OBSTACLE FREE ZONE (OFZ) 21
307. RUNWAY OBJECT FREE AREA 22
308. CLEARWAY STANDARDS 22
309. STOPWAY STANDARDS 23
310. RESCUE AND FIREFIGHTING ACCESS 23
311. to 399. RESERVED 23

Chapter 4. TAXIWAY AND TAXILANE DESIGN

400. INTRODUCTION 33

401. DIMENSIONAL STANDARDS . . . 33
402. TAXIWAY SHOULDERS . . . 33
403. TAXIWAY SAFETY AREA (TSA) . . . 33
404. TAXIWAY AND TAXILANE OBJECT FREE AREA (OFA) . . . 33
405. PARALLEL TAXIWAY . . . 33
406. TAXIWAY INTERSECTIONS . . . 34
407. ENTRANCE TAXIWAYS . . . 34
408. BYPASS TAXIWAYS . . . 34
409. HOLDING BAYS . . . 34
410. TURNAROUNDS . . . 35
411. DUAL PARALLEL TAXIWAYS . . . 35
412. TAXIWAY BETWEEN PARALLEL RUNWAYS . . . 35
413. EXIT TAXIWAYS . . . 35
414. APRON TAXIWAYS AND TAXILANES . . . 35
415. to 499. RESERVED . . . 35

Chapter 5. SURFACE GRADIENT AND LINE OF SIGHT

500. INTRODUCTION . . . 49
501. BACKGROUND . . . 49
502. SURFACE GRADIENT STANDARDS . . . 49
503. LINE OF SIGHT STANDARDS . . . 56
504. to 599. RESERVED . . . 56

Chapter 6. SITE REQUIREMENTS FOR NAVAID AND ATC FACILITIES

600. GENERAL . . . 59
601. MICROWAVE LANDING SYSTEM . . . 59
602. INSTRUMENT LANDING SYSTEM . . . 61
603. NONDIRECTIONAL BEACON . . . 63
604. VERY HIGH FREQUENCY OMNIRANGE . . . 64
605. APPROACH LIGHTING SYSTEMS . . . 64
606. OMNIDIRECTIONAL APPROACH LIGHTING SYSTEMS . . . 65
607. LEAD-IN LIGHTING SYSTEMS . . . 65
608. AIRPORT ROTATING BEACONS . . . 65
609. AIRPORT TRAFFIC CONTROL TOWERS . . . 65
610. AIRPORT SURVEILLANCE RADAR . . . 66
611. AIRPORT SURFACE DETECTION EQUIPMENT . . . 66
612. RUNWAY VISUAL RANGE FACILITIES . . . 66
613. AUTOMATIC WEATHER OBSERVATION STATIONS (AWOS) . . . 66
614. PHYSICAL SECURITY . . . 67
615. CABLE PROTECTION . . . 67
616. to 699. RESERVED . . . 67

Chapter 7. RUNWAY AND TAXIWAY BRIDGES

700. INTRODUCTION . . . 69
701. SITING PRECEPTS . . . 69
702. DIMENSIONS . . . 69
703. LOAD CONSIDERATIONS . . . 69
704. DECK DESIGN . . . 69
705. MARKING AND LIGHTING . . . 69
706. OTHER CONSIDERATIONS . . . 69
707. PASSENGER AND BAGGAGE TUNNELS . . . 70
708. to 799. RESERVED . . . 70

Chapter 8. THE EFFECTS AND TREATMENT OF JET BLAST

800. INTRODUCTION 77
801. JET BLAST EFFECTS 77
802. BLAST FENCES 77
803. SHOULDERS AND BLAST PADS 78

Appendix 1. WIND ANALYSIS

1. OBJECTIVE 87
2. CROSSWINDS 87
3. COVERAGE AND ORIENTATION OF RUNWAYS 87
4. ASSEMBLING WIND DATA 87
5. ANALYZING WIND DATA 88
6. CONCLUSIONS 88
7. PRESUMPTIONS 88
8. COMPUTER WIND ANALYSIS 88

Appendix 2. THRESHOLD SITING REQUIREMENTS

1. PURPOSE 101
2. APPLICATION 101
3. LIMITATIONS 101
4. EVALUATION CONSIDERATIONS 101
5. LOCATING, DISPLACING, OR RELOCATING THE THRESHOLD 102

Appendix 3. AIRPORT REFERENCE POINT

1. DISCUSSION 107
2. SAMPLE COMPUTATION 107
3. ACCURACY 107

Appendix 4. COMPASS CALIBRATION PAD

1. PURPOSE 111
2. BACKGROUND 111
3. APPLICATION 111
4. DESIGN OF COMPASS CALIBRATION PAD 111
6. CONSTRUCTION OF COMPASS CALIBRATION PAD 112
7. VOR CHECKPOINT 113

Appendix 5. SMALL AIRPORT BUILDINGS, AIRPLANE PARKING, AND TIEDOWNS

1. GENERAL 117
2. TRANSIENT APRON 117
3. APRON FOR BASED AIRPLANES 117
4. TIEDOWNS 118
5. OTHER CONSIDERATIONS 118
6. HANGARS 118
7. ADMINISTRATION BUILDING 118
8. AIRPORT SURVEY 122
9. BUILDING PLAN 122
10. EXPANSION 122
11. CIRCULATION 122
12. WAITING ROOM 122
13. MANAGER'S OFFICE 123
14. EATING FACILITIES 123

15. PUBLIC RESTROOMS 123
16. ROADS AND AUTO PARKING 123

Appendix 6. METRIC CONVERSION AND TYPICAL AIRPORT LAYOUT PLAN

1. GENERAL 125
2. TYPICAL AIRPORT LAYOUT PLAN 126

Appendix 7. AIRPORT LAYOUT PLAN COMPONENTS AND PREPARATION

1. NARRATIVE REPORT 131
2. AIRPORT LAYOUT DRAWING 132
3. AIRPORT AIRSPACE DRAWING 134
4. INNER PORTION OF THE APPROACH SURFACE DRAWING 135
5. TERMINAL AREA DRAWING 136
6. LAND USE DRAWING 136
7. AIRPORT PROPERTY MAP 137

Appendix 8. RUNWAY DESIGN RATIONALE

1. SEPARATIONS 139
2. OBSTACLE FREE ZONE (OFZ) 139
3. RUNWAY SAFETY AREA 139
4. RUNWAY OBJECT FREE AREA (ROFA) 139
5. RUNWAY SHOULDERS AND BLAST PADS 139
6. CLEARWAY 139
7. STOPWAY 139
8. RUNWAY PROTECTION ZONE (RPZ) 140

Appendix 9. TAXIWAY AND TAXILANE DESIGN RATIONALE

1. INTRODUCTION 141
2. BACKGROUND AND RATIONALE 141
3. EXIT TAXIWAY LOCATION 142
4. WINGTIP TRACE 146

Appendix 10. TAXIWAY FILLET DESIGN

1. INTRODUCTION 149
2. EXAMPLE NO. 1, JUDGMENTAL OVERSTEERING 150
3. EXAMPLE NO. 2, MAINTAINING COCKPIT OVER CENTERLINE 150

Appendix 11. COMPUTER PROGRAM

1. AIRPORT DESIGN (FOR MICROCOMPUTERS) VERSION 4.1 153
2. HOW TO OBTAIN A COPY OF AIRPORT DESIGN (FOR MICROCOMPUTERS) VERSION 4.1 153
3. REQUIREMENTS 153
4. SETUP ON A MICROCOMPUTER 153
5. RUN AIRPORT DESIGN PROGRAM 153
6. HOT KEYS 153
7. RUNWAY AND TAXIWAY WIDTH AND CLEARANCE STANDARD DIMENSIONS 154
8. RECOMMENDED RUNWAY LENGTHS 154
9. STANDARD WIND ANALYSIS 154
10. TAXIWAY DESIGN 155

11. AIRPORT CAPACITY AND DELAY FOR LONG RANGE PLANNING 156
12. DECLARED DISTANCE LENGTHS 156
13. INPUT AIRPLANE DATA AVAILABILITY 156

Appendix 12. AIRPLANE DATA

1. BACKGROUND 165
2. EXPLANATORY INFORMATION 166

Appendix 13. AIRPLANES ARRANGED BY AIRPLANE MANUFACTURER AND AIRPORT REFERENCE CODE (24 pages)

Section 1. Alphabetical Listing (U.S. customary units)

Section 2. Alphabetical Listing (SI units)

Section 3. Listing Small Airplanes by Airport Reference Code (U.S. customary units)

Section 4. Listing Large Airplanes by Airport Reference Code (U.S. customary units)

Section 5. Listing Small Airplanes by Airport Reference Code (SI units)

Section 6. Listing Large Airplanes by Airport Reference Code (SI units)

Appendix 14. DECLARED DISTANCES

1. APPLICATION 275
2. BACKGROUND 275
3. FAA APPROVAL FOR APPLYING DECLARED DISTANCES IN AIRPORT DESIGN 275
4. RUNWAY SAFETY AREA (RSA) AND RUNWAY OBJECT FREE AREA (ROFA) LENGTHS 276
5. RUNWAY PROTECTION ZONE (RPZ) LOCATION AND SIZE 276
6. CLEARWAY LOCATION 276
7. NOTIFICATION 276

Appendix 15. TRANSFER OF ELECTRONIC DATA

1. INTRODUCTION 283
2. BACKGROUND 283
3. DEFINITIONS 283
4. APPLICATION 283
5. CADD FILE DELIVERABLES 284
6. DATABASES DELIVERABLES 286
7. PHOTOGRAMMETRY DELIVERABLES 286
8. FEATURES AND OBJECTS CODE 287
9. MEDIA 289
10. FAA POINT OF CONTACT 289

Appendix 16. NEW INSTRUMENT APPROACH PROCEDURES

1. BACKGROUND 291
2. RUNWAY DESIGNATION 291
3. REQUIREMENTS 291

Appendix 17. ACRONYMS (1 page)

Appendix 18. INDEX (4 pages)

Table Page

1-1. Increases in airport design standards associated with an upgrade in the first component (aircraft approach category) of the airport reference code 7
1-2. Increases in airport design standards to provide for lower approach visibility minimums 8
2-1. Runway separation standards for aircraft approach categories A & B 14
2-2. Runway separation standards for aircraft approach categories C & D 15
2-3. Taxiway and taxilane separation standards 16
2-4. Runway protection zone (RPZ) dimensions 19
3-1. Runway design standards for aircraft approach category A & B visual runways and runways with not lower than 3/4-statute mile (1 200 m) approach visibility minimums 24
3-2. Runway design standards for aircraft approach categories A & B runways with lower than 3/4-statute mile (1 200 m) approach visibility minimums 25
3-3. Runway design standards for aircraft approach categories C & D 26
4-1. Taxiway dimensional standards 36
4-2. Taxiway fillet dimensions 38
4-3. Wingtip clearance standards 38
A9-1. Exit taxiway cumulative utilization percentages 142
A16-1. Instrument approach requirements 292
A16-2. Airport information for minimums of ≥1-statute mile and ≥400 foot 293
A16-3. Airport information for lower minimums 294
A16-4. OFZ and threshold siting surface for minimums of ≥1-statute mile and ≥400 foot 295

Figure Page

2-1. Typical airport layout 17
2-2. Parallel runway separation 18
2-3. Runway protection zone 20
3-1. Runway safety area 27
3-2. Obstacle free zone (OFZ) for visual runways and runways with not lower than 3/4-statute mile (1 200 m) approach visibility minimums 28
3-3. Obstacle free zone (OFZ) for runways serving small airplanes exclusively with lower than 3/4-statute mile (1 200 m) approach visibility minimums 29
3-4. Obstacle free zone (OFZ) for runways serving large airplanes with lower than 3/4-statute mile (1 200 m) approach visibility minimums 30
3-5. Obstacle free zone (OFZ) for runways serving large airplanes with lower than 3/4-statute mile (1 200 m) approach visibility minimums and displaced threshold 31
3-6. Clearway 32
3-7. Stopway 32
4-1. Taxiway intersection details 37
4-2. Maintaining cockpit over centerline 39
4-3. Judgmental oversteering 40
4-4. Example of pavement fillet computer program printout 41
4-5. Entrance taxiway 42
4-6. Bypass taxiway 42
4-7. Dual parallel taxiway entrance 43
4-8. Typical holding bay configurations 44
4-9. Taxiway turnaround 44
4-10. Crossover taxiway 45
4-11. Right-angled exit taxiway 45
4-12. Acute-angled exit taxiway 46
4-13. Example of acute-angled exit taxiway computer layout data page 1 47
4-14. Example of acute-angled exit taxiway computer layout data page 2 48
5-1. Longitudinal grade limitations for aircraft approach categories A & B 50
5-2. Transverse grade limitations for aircraft approach categories A & B 51

5-3. Longitudinal grade limitations for aircraft approach categories C & D . . . 52
5-4. Transverse grade limitations for aircraft approach categories C & D . . . 53
5-5. Runway safety area grade limitations beyond 200 feet (60 m) from the runway end . . . 55
5-6. Runway visibility zone . . . 57
6-1. AZ antenna siting . . . 59
6-2. Typical NAVAID placement . . . 60
6-3. AZ antenna critical area . . . 61
6-4. EL antenna siting . . . 61
6-5. EL antenna critical area . . . 61
6-6. ILS LOC siting and critical area . . . 62
6-7. GS siting and critical area . . . 62
6-8. Marker beacon site . . . 63
6-9. NDB site . . . 63
6-10. A TVOR installation . . . 64
7-1. Full width runway-taxiway bridge . . . 71
7-2. Cross-section full width runway-taxiway bridge . . . 72
7-3. Minimum width taxiway bridge with positive edge protection, O'Hare Airport, Chicago, IL . . . 73
7-4. Example structural deck and depressed roadway, O'Hare Airport, Chicago, IL . . . 74
7-5. Suggested shoulder marking of minimum width taxiway bridge . . . 75
7-6. Controlled use service road, Los Angeles International Airport, Los Angeles, CA . . . 76
8-1. Velocity distance curves, DC-8 . . . 79
8-2. Velocity distance curves, B-727 . . . 80
8-3. Velocity distance curves, B-747 . . . 81
8-4. Velocity distance curves, DC-10 . . . 82
8-5. Blast velocities of business jet airplanes . . . 83
8-6. Typical blast deflector fences, metal . . . 84
8-7. Typical blast deflector fences, concrete . . . 85
A1-1. Wind vector diagram . . . 89
A1-2. Typical environmental data service wind summary . . . 90
A1-3. Windrose blank showing direction and divisions . . . 91
A1-4. Completed windrose using figure A1-2 data . . . 92
A1-5. Windrose analysis . . . 93
A1-6. Windrose analysis--estimating area not included . . . 94
A1-7. Computer printout page 1 . . . 95
A1-8. Computer printout page 2 . . . 96
A1-9. Computer printout page 3 . . . 97
A1-10. Lotus cell-formulas page 1 . . . 98
A1-11. Lotus cell-formulas page 2 . . . 99
A2-1. Dimensional standards for locating thresholds . . . 104
A2-2. Approach slopes . . . 105
A2-3. Approach slopes--offset localizer . . . 106
A3-1. Sample layout . . . 108
A3-2. Sample computation - airport reference point . . . 109
A4-1. Marking layout and details of wheel block . . . 114
A4-2. Type I. compass calibration pad . . . 115
A4-3. Type II. compass calibration pad . . . 116
A5-1. Parking apron area . . . 119
A5-2. Tiedown layouts . . . 120
A5-3. T-hanger layout . . . 121
A6-1. Typical airport layout plan . . . 129
A8-1. Approximate distance airplanes undershoot and overrun the runway end . . . 140
A9-1. Wingtip clearance - parallel taxiways . . . 143
A9-2. Wingtip clearance from taxiway . . . 144
A9-3. Wingtip clearance from apron taxiway . . . 144
A9-4. Wingtip clearance from taxilane . . . 145

A9-5. Pavement edge clearance on tangent 146
A9-6. McDonnell-Douglas MD-88 wingtip clearance trace for a 100-foot (30.5 m) radius centerline 147
A9-7. McDonnell-Douglas MD-88 wingtip clearance trace for a 120-foot (36.5 m) radius offset centerline 147
A9-8. Boeing 727-200 wingtip clearance trace for a 120-foot (36.5 m) radius offset centerline 148
A9-9. Boeing 727-100 wingtip clearance trace for a 120-foot (36.5 m) radius offset centerline 148
A10-1. Taxiway intersection details 151
A10-2. Depiction of symbols 152
A11-1. THIS FIGURE INTENTIONALLY LEFT BLANK 156
A11-2. Estimated airplane data elements for input in the computer program 157
A11-3. Example of the airport design airplane and airport data window 158
A11-4. Example printout of width and clearance standard dimensions page 1 158
A11-5. Example printout of width and clearance standard dimensions page 2 159
A11-6. Example printout of wind analysis (two bi-directional runways) 160
A11-7. Example printout of windrose (two bi-directional runways) 161
A11-8. Example printout of wind analysis (one uni-directional runway) 162
A11-9. Example printout of windrose (one uni-directional runway) 163
A11-10. Nomenclature used in the taxiway design task 164
A11-11. Nomenclature used in the declared distance task 164
A12-1. Single engine, high wing, tailwheel airplanes 8,000 lb. (3,628 Kg) or less 167
A12-2. Single engine, high wing, tailwheel airplanes 8,000 lb. (3,628 Kg) or less (cont'd) 168
A12-3. Single engine, high wing, tricycle gear airplanes 8,000 lb. (3,628 Kg) or less 169
A12-4. Single engine, low wing, tricycle gear airplanes 8,000 lb. (3,628 Kg) or less 170
A12-5. Single engine, low wing, tricycle gear airplanes 8,000 lb. (3,628 Kg) or less (cont'd) 171
A12-6. Twin engine, low or mid wing, tricycle gear airplanes 8,000 lb. (3,628 Kg) or less 172
A12-7. Twin engine, low or mid wing, tricycle gear airplanes 8,000 lb. (3,628 Kg) or less (cont,d) 173
A12-8. Twin engine, high or mid wing, tricycle gear airplanes 8,000 lb. (3,628 Kg) or less 174
A12-9. Aérospatiale Nord 262 175
A12-10. Aérospatiale/Sud SE-210 Caravelle 176
A12-11. Airbus Industries A300, 310, and 320 177
A12-12. Avions de Transport Regional ATR-42 & -72 178
A12-13. Avions Marcel Dassault Mystère 20 (Fan Jet Falcon) 179
A12-14. BAe 1-11 180
A12-15. B.A.C./SNIAS Concorde 181
A12-16. B.A.C./Vickers VC-10 182
A12-17. B.A.C./Vickers Viscount 183
A12-18. Beech Starship 184
A12-19. Beechcraft Airliner 185
A12-20. Beechcraft King Air 186
A12-21. Beechcraft Model 18 and Conversions 187
A12-22. Beechcraft Queen Air 188
A12-23. Boeing B-52 Stratofortress 189
A12-24. Boeing KC-97L 190
A12-25. Boeing KC-135A 191
A12-26. Boeing 707-720 192
A12-27. Boeing 727 193
A12-28. Boeing 737 194
A12-29. Boeing 747 195
A12-30. Boeing 757 196
A12-31. Boeing 767 197
A12-32. British Aerospace 146 198
A12-33. Canadiar CL-44 199
A12-34. Canadiar CL-66 200
A12-35. Cessna Citation 201
A12-36. Construcciones Aeronauticas CASA C-212 and 235 202
A12-37. Convair-liner and Turboprop Conversions 203

A12-38. De Havilland Canada C-7 Caribou 204
A12-39. De Havilland Canada DASH 7 & DASH 8 205
A12-40. Douglas C-124 Globemaster 206
A12-41. De Havilland Canada DHC-6 Twin Otter 207
A12-42. Dornier Gmb H 208
A12-43. Douglas DC-3 209
A12-44. Douglas DC-4/6/7 210
A12-45. Embraer EmB 110 211
A12-46. Embraer EmB 120 212
A12-47. Fairchild C-119K Flying Boxcar 213
A12-48. Fairchild C-123K Provider 214
A12-49. Fairchild F-27 215
A12-50. Fokker F-27 216
A12-51. Fokker F-28 217
A12-52. Gates Learjet 218
A12-53. General Dynamics/Convair 880/990 219
A12-54. Grumman Gulfstream I 220
A12-55. Grumman Gulfstream II 221
A12-56. Grumman G-64/G-III 222
A12-57. Grumman G-73 223
A12-58. Hamburger-Flugzeubau HFB-320 Hansa 224
A12-59. Hawker Siddeley DH. 104 Dove 225
A12-60. Hawker Siddeley DH. 114 Heron 226
A12-61. Hawker Siddeley HS-125 227
A12-62. Hawker Siddeley HS-748 228
A12-63. Ilyushin IL-62 229
A12-64. Israel Aircraft Industries Westwind 230
A12-65. Lockheed Constellation and Super Constellation 231
A12-66. Lockheed C-5B Galaxy 232
A12-67. Lockheed C-141 Starlifter 233
A12-68. Lockheed L-188 Electra II 234
A12-69. Lockheed L-100 Hercules 235
A12-70. Lockheed L-1011 Tristar 236
A12-71. Lockheed L-1329 Jetstar 237
A12-72. Martin 404 238
A12-73. McDonnell-Douglas DC-8 239
A12-74. McDonnell-Douglas DC-9 and MD-80 240
A12-75. McDonnell-Douglas DC-10 241
A12-76. McDonnell-Douglas MD-11 242
A12-77. Mitsubishi MU-2 243
A12-78. Nihon/N.A.M.C. YS-11A 244
A12-79. Rockwell International NA-265 Sabreliner 245
A12-80. SAAB SF 340 246
A12-81. Short Brothers 247
A12-82. Shorts SC. 5/10 Belfast 248
A12-83. Swearingen Merlin 249
A12-84. Swearingen Metro 250
A14-1. Takeoff run available (TORA) 277
A14-2. Takeoff distance available (TODA) 278
A14-3. Accelerate-stop distance available (ASDA) 279
A14-4. Landing distance available (LDA) 280
A14-5. Example of a runway extended to 7000 feet 281
A14-6. Example of a runway with threshold displaced for runway safety area 282

Chapter 1. REGULATORY REQUIREMENTS AND DEFINITION OF TERMS

1. GENERAL. Section 103 of the Federal Aviation Act of 1958 states in part, "In the exercise and performance of his power and duties under this Act, the Secretary of Transportation shall consider the following, among other things, as being in the public interest: (a) The regulation of air commerce in such manner as to best promote its development and safety and fulfill the requirements of defense; (b) The promotion, encouragement, and development of civil aeronautics . . . ."

This public charge, in effect, requires the development and maintenance of a national system of safe, delay-free, and cost-effective airports. The use of the standards and recommendations contained in this publication in the design of airports supports this public charge. These standards and recommendations, however, do not limit or regulate the operations of aircraft.

2. DEFINITIONS. As used in this publication, the following terms mean:

Aircraft Approach Category. A grouping of aircraft based on 1.3 times their stall speed in their landing configuration at their maximum certificated landing weight. The categories are as follows:

Category A: Speed less than 91 knots.

Category B: Speed 91 knots or more but less than 121 knots.

Category C: Speed 121 knots or more but less than 141 knots.

Category D: Speed 141 knots or more but less than 166 knots.

Category E: Speed 166 knots or more.

Airplane Design Group (ADG). A grouping of airplanes based on wingspan. The groups are as follows:

Group I: Up to but not including 49 feet (15 m).

Group II: 49 feet (15 m) up to but not including 79 feet (24 m).

Group III: 79 feet (24 m) up to but not including 118 feet (36 m).

Group IV: 118 feet (36 m) up to but not including 171 feet (52 m).

Group V: 171 feet (52 m) up to but not including 214 feet (65 m).

Group VI: 214 feet (65 m) up to but not including 262 feet (80 m).

Airport Elevation. The highest point on an airport's usable runway expressed in feet above mean sea level (MSL).

Airport Layout Plan (ALP). The plan of an airport showing the layout of existing and proposed airport facilities.

Airport Reference Point (ARP). The latitude and longitude of the approximate center of the airport.

Blast Fence. A barrier used to divert or dissipate jet blast or propeller wash.

Building Restriction Line (BRL). A line which identifies suitable building area locations on airports.

Clear Zone. See Runway Protection Zone.

Clearway (CWY). A defined rectangular area beyond the end of a runway cleared or suitable for use in lieu of runway to satisfy takeoff distance requirements.

Compass Calibration Pad. An airport facility used for calibrating an aircraft compass.

Declared Distances. The distances the airport owner declares available for the airplane's takeoff run, takeoff distance, accelerate-stop distance, and landing distance requirements. The distances are:

Takeoff run available (TORA) - the runway length declared available and suitable for the ground run of an airplane taking off;

Takeoff distance available (TODA) - the TORA plus the length of any remaining runway or clearway (CWY) beyond the far end of the TORA;

Accelerate-stop distance available (ASDA) -the runway plus stopway (SWY) length declared available and suitable for the acceleration and deceleration of an airplane aborting a takeoff; and

Landing distance available (LDA) - the runway length declared available and suitable for a landing airplane.

NOTE: The full length of TODA may not be usable for all takeoffs because of obstacles in the departure area. The usable TODA length is aircraft performance dependent and, as such, must be determined by the aircraft operator before each takeoff and requires knowledge of the location of each controlling obstacle in the departure area.

Frangible NAVAID. A navigational aid (NAVAID) which retains its structural integrity and stiffness up to a designated maximum load, but on impact from a greater load, breaks, distorts, or yields in such a manner as to present the minimum hazard to aircraft. The term NAVAID includes electrical and visual air navigational aids, lights, signs, and associated supporting equipment.

Hazard to Air Navigation. An object which, as a result of an aeronautical study, the FAA determines will have a substantial adverse effect upon the safe and efficient use of navigable airspace by aircraft, operation of air navigation facilities, or existing or potential airport capacity.

Large Airplane. An airplane of more than 12,500 pounds (5 700 kg) maximum certificated takeoff weight.

Low Impact Resistant Supports (LIRS). Supports designed to resist operational and environmental static loads and fail when subjected to a shock load such as that from a colliding aircraft.

Object. Includes, but is not limited to above ground structures, NAVAIDs, people, equipment, vehicles, natural growth, terrain, and parked aircraft.

Object Free Area (OFA). An area on the ground centered on a runway, taxiway, or taxilane centerline provided to enhance the safety of aircraft operations by having the area free of objects, except for objects that need to be located in the OFA for air navigation or aircraft ground maneuvering purposes.

Obstacle Free Zone (OFZ). The OFZ is the airspace below 150 feet (45 m) above the established airport elevation and along the runway and extended runway centerline that is required to be clear of all objects, except for frangible visual NAVAIDs that need to be located in the OFZ because of their function, in order to provide clearance protection for aircraft landing or taking off from the runway, and for missed approaches. The OFZ is subdivided as follows:

Runway OFZ. The airspace above a surface centered on the runway centerline.

Inner-approach OFZ. The airspace above a surface centered on the extended runway centerline. It applies to runways with an approach lighting system.

Inner-transitional OFZ. The airspace above the surfaces located on the outer edges of the runway OFZ and the inner-approach OFZ. It applies to runways with approach visibility minimums lower than 3/4-statute mile (1 200 m).

Obstruction to Air Navigation. An object of greater height than any of the heights or surfaces presented in Subpart C of Code of Federal Regulation (14 CFR), Part 77. (Obstructions to air navigation are presumed to be hazards to air navigation until an FAA study has determined otherwise.)

Precision Approach Category I (CAT I) Runway. A runway with an instrument approach procedure which provides for approaches to a decision height (DH) of not less than 200 feet (60 m) and visibility of not less than 1/2 mile (800 m) or Runway Visual Range (RVR) 2400 (RVR 1800 with operative touchdown zone and runway centerline lights).

Precision Approach Category II (CAT II) Runway. A runway with an instrument approach procedure which provides for approaches to a minima less than CAT I to as low as a decision height (DH) of not less than 100 feet (30 m) and RVR of not less than RVR 1200.

Precision Approach Category III (CAT III) Runway. A runway with an instrument approach procedure which provides for approaches to minima less than CAT II.

Runway (RW). A defined rectangular surface on an airport prepared or suitable for the landing or takeoff of airplanes.

Runway Blast Pad. A surface adjacent to the ends of runways provided to reduce the erosive effect of jet blast and propeller wash.

Runway Protection Zone (RPZ). An area off the runway end to enhance the protection of people and property on the ground.

Runway Safety Area (RSA). A 11defined surface surrounding the runway prepared or suitable for reducing the risk of damage to airplanes in the event of an undershoot, overshoot, or excursion from the runway.

Shoulder. An area adjacent to the edge of paved runways, taxiways, or aprons providing a transition between the pavement and the adjacent surface; support for aircraft running off the pavement; enhanced drainage; and blast protection.

Small Airplane. An airplane of 12,500 pounds (5 700 kg) or less maximum certificated takeoff weight.

Stopway (SWY). A defined rectangular surface beyond the end of a runway prepared or suitable for use in lieu of runway to support an airplane, without causing structural damage to the airplane, during an aborted takeoff.

Taxilane (TL). The portion of the aircraft parking area used for access between taxiways and aircraft parking positions.

Taxiway (TW). A defined path established for the taxiing of aircraft from one part of an airport to another.

Taxiway Safety Area (TSA). A defined surface alongside the taxiway prepared or suitable for reducing the risk of damage to an airplane unintentionally departing the taxiway.

Threshold (TH). The beginning of that portion of the runway available for landing. In some instances the landing threshold may be displaced.

Displaced Threshold. The portion of pavement behind a displaced threshold may be available for takeoffs in either direction and landings from the opposite direction.

Visual Runway. A runway without an existing or planned straight-in instrument approach procedure.

3. **RELATED/REFERENCED READING MATERIAL**. The following is a listing of documents referenced in other parts of this advisory circular. Advisory Circulars 00-2 and 00-44 may be obtained by writing to: The U.S. Department of Transportation; Utilization and Storage Section, M-443.2; Washington, D.C. 20590. Instructions for obtaining these publications are found in AC 00-2 and AC 00-44.

a. AC 00-2, Advisory Circular Checklist.

b. AC 00-44, Status of Federal Aviation Regulations.

c. AC 20-35, Tie-Down Sense.

d. AC 70-2, Airspace Utilization Considerations in the Proposed Construction, Alteration, Activation, and Deactivation of Airports.

e. AC 70/7460-1, Obstruction Marking and Lighting.

f. AC 70/7460-2, Proposed Construction or Alteration of Objects That May Affect The Navigable Airspace.

g. AC 107-1, Aviation Security-Airports.

h. AC 120-29, Criteria for Approving Category I and Category II Landing Minima for FAR Part 121 Operators.

i. AC 150/5000-3, Address List for Regional Airports Divisions and Airports District/Field Offices.

j. AC 150/5060-5, Airport Capacity and Delay.

k. AC 150/5070-3, Planning the Airport Industrial Park.

l. AC 150/5070-6, Airport Master Plans.

m. AC 150/5190-1, Minimum Standards for Commercial Aeronautical Activities on Public Airports.

n. AC 150/5190-4, A Model Zoning Ordinance to Limit Height of Objects Around Airports.

o. AC 150/5200-XX, Airport Wildlife Hazard Management.

p. AC 150/5220-16, Automated Weather Observing Systems (AWOS) for Non-Federal Applications.

q. AC 150/5230-4, Aircraft Fuel Storage, Handling, and Dispensing on Airports.

r. AC 150/5320-5, Airport Drainage.

s. AC 150/5320-6, Airport Pavement Design and Evaluation.

t. AC 150/5320-14, Airport Landscaping for Noise Control Purposes.

u. AC 150/5325-4, Runway Length Requirements for Airport Design.

v. AC 150/5340-1, Marking of Paved Areas on Airports.

w. AC 150/5340-5, Segmented Circle Marker Systems.

x. AC 150/5340-14, Economy Approach Lighting Aids.

y. AC 150/5340-18, Standards for Airport Sign Systems.

z. AC 150/5340-21, Airport Miscellaneous Lighting Visual Aids.

aa. AC 150/5340-24, Runway and Taxiway Edge Lighting System.

ab. AC 150/5340-28, Precision Approach Path Indicator (PAPI) Systems.

ac. AC 150/5345-52, Generic Visual Slope Indicators (GVGI).

ad. AC 150/5360-13, Planning and Design Guidelines for Airport Terminal Facilities.

ae. AC 150/5370-10, Standards for Specifying Construction of Airports.

af. AC 150/5390-2, Heliport Design.

ag. 14 CFR Part 23, Airworthiness Standards: Normal, Utility, and Acrobatic Category Airplanes.

ah. 14 CFR Part 25, Airworthiness Standards: Transport Category Airplanes.

ai. 14 CFR Part 77, Objects Affecting Navigable Airspace.

aj. 14 CFR Part 97, Standard Instrument Approach Procedures.

ak. 14 CFR Part 135, Air Taxi Operators and Commercial Operators of Small Aircraft.

al. 14 CFR Part 139, Certification and Operations: Land Airports Serving Certain Air Carriers.

am. 14 CFR Part 151, Federal Aid to Airports.

an. 14 CFR Part 152, Airport Aid Program.

ao. 14 CFR Part 153, Acquisition of U.S. Land for Public Airports.

ap. 14 CFR Part 154, Acquisition of Land for Public Airports Under the Airport and Airway Development Act of 1970.

aq. 14 CFR Part 157, Notice of Construction, Alteration, Activation, and Deactivation of Airports.

ar. Order 1050.1, Policies and Procedures for Considering Environmental Impacts.

as. Order 5050.4, Airport Environmental Handbook.

at. Order 5100.38, Airport Improvement Program (AIP) Handbook.

au. Order 7400.2, Procedures for Handling Airspace Matters.

av. Order 8200.1, United States Standard Flight Inspection Manual.

aw. Order 8260.3, United States Standard for Terminal Instrument Procedures (TERPS).

4. AIRPORT REFERENCE CODE (ARC). The ARC is a coding system used to relate airport design criteria to the operational and physical characteristics of the airplanes intended to operate at the airport.

a. Coding System. The airport reference code has two components relating to the airport design aircraft. The first component, depicted by a letter, is the *aircraft approach category* and relates to aircraft approach speed (operational characteristic). The second component, depicted by a Roman numeral, is the *airplane design group* and relates to airplane wingspan (physical characteristic). Generally, runways standards are related to aircraft approach speed, airplane wingspan, and designated or planned approach visibility minimums.

Taxiway and taxilane standards are related to airplane design group.

b. Airport Design. Airport design first requires selecting the ARC(s), then the lowest designated or planned approach visibility minimums for each runway, and then applying the airport design criteria associated with the airport reference code and the designated or planned approach visibility minimums.

(1) An upgrade in the first component of the ARC may result in an increase in airport design standards. Table 1-1 depicts these increases.

(2) An upgrade in the second component of the ARC generally will result in a major increase in airport design standards.

(3) An airport upgrade to provide for lower approach visibility minimums may result in an increase in airport design standards. Table 1-2 depicts these increases.

(4) Operational minimums are based on current criteria, runways, airspace, and instrumentation. Unless this is taken into consideration in the development of the airport, the operational minimums may be other than proposed.

(5) For airports with two or more runways, it may be desirable to design all airport elements to meet the requirements of the most demanding ARC. However, it may be more practical to design some airport elements, e.g., a secondary runway and its associated taxiway, to standards associated with a lesser demanding ARC.

5. AIRPORT LAYOUT PLAN. An Airport Layout Plan (ALP) is a scaled drawing of existing and proposed land and facilities necessary for the operation and development of the airport. Any airport will benefit from a carefully developed plan that reflects current FAA design standards and planning criteria. (See appendices 6 and 7 for detailed information.)

a. FAA-Approved ALP. All airport development carried out at Federally obligated airports must be done in accordance with an FAA-approved ALP. The FAA-approved ALP, to the extent practicable, should conform to the FAA airport design standards existing at the time of its approval. Due to unique site, environmental, or other constraints, the FAA may approve an ALP not fully complying with design standards. Such approval requires an FAA study and finding that the proposed modification is safe for the specific site and conditions. When the FAA upgrades a standard, airport owners should, to the extent practicable, include the upgrade in the ALP before starting future development.

b. Guidance. AC 150/5070-6, Airport Master Plans, contains background information on the development of ALPs, as well as a detailed listing of the various components that constitute a well-appointed ALP.

c. Electronic Plans. The FAA recommends the development of electronic ALPs where practical.

6. MODIFICATION OF AIRPORT DESIGN STANDARDS TO MEET LOCAL CONDITIONS. Unique local conditions may require modification to airport design standards on a case-by-case basis. A modification to an airport design standard related to new construction, reconstruction, expansion, or upgrade on an airport which received Federal aid requires FAA approval. The request for modification should show that the modification will provide an acceptable level of safety, economy, durability, and workmanship. Appendixes 8 and 9 discuss the relationship between airplane physical characteristics and the design of airport elements. This rationale along with the computer program cited in appendix 11 may be used to show that the modification will provide an acceptable level of safety for the specified conditions, including the type of aircraft.

7. NOTICE TO THE FAA OF AIRPORT DEVELOPMENT. 14 CFR Part 157, Notice of Construction, Activation, and Deactivation of Airports, requires persons proposing to construct, activate, or deactivate an airport to give notice of their intent to the FAA. The notice applies to proposed alterations to the takeoff and landing areas, traffic patterns, and airport use, e.g., a change from private-use to public-use.

a. Notice Procedure. 14 CFR Part 157 requires airport proponents to notify the appropriate FAA Airports Regional or District Office at least 30 days before construction, alteration, deactivation, or the date of the proposed change in use. In an emergency involving essential public service, health, or safety, or when delay would result in a hardship, a proponent may notify the FAA by telephone and submit Form 7480-1, Notice of Landing Area Proposal, within 5 days.

b. The Notice. The notice consists of a completed FAA Form 7480-1, a layout sketch, and a location map. The layout sketch should show the airport takeoff and landing area configuration in relation to buildings, trees, fences, power lines, and other similar significant features. The preferred type of location map is the 7.5 minute U.S. Geological Survey Quadrangle Map showing the location of the airport site. Form 7480-1 lists FAA Airports Office addresses.

c. FAA Action. The FAA evaluates the airport proposal for its impact upon the: safe and efficient use of navigable airspace; operation of air navigation facilities; existing or potential airport capacity; and safety of persons and property on the ground. The FAA notifies proponents of the results of the FAA evaluation.

d. Penalty for Failure to Provide Notice. Persons who fail to give notice are subject to civil penalty.

8. NOTICE TO THE FAA OF PROPOSED CONSTRUCTION. 14 CFR Part 77, Objects Affecting Navigable Airspace, requires persons proposing any construction or alteration described in 14 CFR Section 77.13(a) to give 30-day notice to the FAA of their intent. This includes any construction or alteration of structures more than 200 feet (61 m) in height above the ground level or at a height that penetrates defined imaginary surfaces located in the vicinity of a public-use airport.

a. Airport Data Requirements. Future airport development plans and feasibility studies on file with the FAA may influence the determinations resulting from 14 CFR Part 77 studies. To assure full consideration of future airport development in 14 CFR Part 77 studies, airport owners must have their plans on file with the FAA. The necessary plan data includes, as a minimum, planned runway end coordinates, elevation, and type of approach for any new runway or runway extension.

b. Penalty for Failure to Provide Notice. Persons who knowingly and willingly fail to give such notice are subject to criminal prosecution.

9. FAA STUDIES. The FAA studies existing and proposed objects and activities, on and in the vicinity of public-use airports. These objects and activities are not limited to obstructions to air navigation, as defined in 14 CFR Part 77. These studies focus on the efficient use of the airport and the safety of persons and property on the ground. As the result of these studies, the FAA may resist, oppose, or recommend against the presence of objects or activities in the vicinity of a public-use airport that conflict with an airport planning or design standard/recommendation. This policy is stated as a notice on page 32152 of Volume 54, No. 149, of the Federal Register, dated Friday, August 4, 1989. FAA studies conclude:

a. Whether an obstruction to air navigation is a hazard to air navigation;

b. Whether an object or activity on or in the vicinity of an airport is objectionable;

c. Whether the need to alter, remove, mark, or light an object exists;

d. Whether to approve an Airport Layout Plan;

e. Whether proposed construction, enlargement, or modification to an airport would have an adverse effect on the safe and efficient use of navigable airspace; or

f. Whether a change in an operational procedure is feasible.

10. FEDERAL ASSISTANCE. The FAA administers a grant program (per Order 5100.38, Airport Improvement Program (AIP) Handbook) which provides financial assistance for developing public-use airports. Persons interested in this program can obtain information from FAA Airports Regional or District Offices. Technical assistance in airport development is also available from these offices.

11. ENVIRONMENTAL ASSESSMENTS. Federal grant assistance in, or ALP approval of, new airport construction or major expansion normally require an environmental assessment in accordance with FAA Order 5050.4A, Airport Environmental Handbook, and the National Environmental Policy Act of 1969.

12. STATE ROLE. Many State aeronautics commissions or similar departments require prior approval and, in some instances, a license for the establishment and operation of an airport. Some States administer a financial assistance program similar to the Federal program and technical advice. Proponents should contact their respective State aeronautics commissions or departments for information on licensing and assistance programs.

13. LOCAL ROLE. Most communities have zoning ordinances, building codes, and fire regulations which may affect airport development. Some have or are in the process of developing codes or ordinances regulating environmental issues such as noise and air quality. Others may have specific procedures for establishing an airport.

14. to 199. RESERVED

Table 1-1. Increases in airport design standards associated with an upgrade in the first component (aircraft approach category) of the airport reference code

ARC upgrade	Changes in airport design standards.
A-I s/ to B-I s/	No change in airport design standards.
B-I s/ to C-I	Increase in crosswind component. Refer to paragraph 203.b. Increase in runway separation standards. Refer to tables 2-1 and 2-2. Increase in RPZ dimensions. Refer to table 2-4 and appendix 14, paragraph 5.b. Increase in OFZ dimensions. Refer to paragraph 306. Increase in runway design standards. Refer to tables 3-1, 3-2, and 3-3. Increase in surface gradient standards. Refer to paragraph 502. Increase in threshold siting standards. Refer to appendix 2, paragraph 5.
A-I to B-I	No change in airport design standards.
B-I to C-I	Increase in crosswind component. Refer to paragraph 203.b. Increase in runway separation standards. Refer to tables 2-1 and 2-2. Increase in RPZ dimensions. Refer to table 2-4 and appendix 14, paragraph 5.b. Increase in runway design standards. Refer to tables 3-1, 3-2, and 3-3. Increase in surface gradient standards. Refer to paragraph 502.
C-I to D-I	Increase in RSA width. Refer to table 3-3, Note 4/.
A-II to B-II	No change in airport design standards.
B-II to C-II	Increase in crosswind component. Refer to paragraph 203.b. Increase in runway separation standards. Refer to tables 2-1 and 2-2. Increase in RPZ dimensions. Refer to table 2-4 and appendix 14, paragraph 5.b. Increase in runway design standards. Refer to tables 3-1, 3-2, and 3-3. Increase in surface gradient standards. Refer to paragraph 502.
C-II to D-II	Increase in RSA width. Refer to table 3-3, Note 4/.
A-III to B-III	No change in airport standards.
B-III to C-III	Increase in runway separation standards. Refer to tables 2-1 and 2-2. Increase in RPZ dimensions. Refer to table 2-4 and appendix 14, paragraph 5.b. Increase in runway design standards. Refer to tables 3-1, 3-2, and 3-3. Increase in surface gradient standards. Refer to paragraph 502.
C-III to D-III	Increase in RSA width. Refer to table 3-3, Note 4/.
A-IV to B-IV	No change in airport design standards.
B-IV to C-IV	Increase in RPZ dimensions. Refer to table 2-4 and appendix 14, paragraph 5.b. Increase in surface gradient standards. Refer to paragraph 502.
C-IV to D-IV	Increase in RSA width. Refer to table 3-3, Note 4/.
C-V to D-V	Increase in RSA width. Refer to table 3-3, Note 4/.
C-VI to D-VI	Increase in RSA width. Refer to table 3-3, Note 4/.

s/ These airport design standards pertain to facilities for small airplanes exclusively.

Table 1-2. Increases in airport design standards to provide for lower approach visibility minimums

Visibility minimums decrease *	Changes in airport design standards.
Visual to Not lower than 1-Mile (1 600 m)	No change in airport design standards.
Not lower than 1-Mile (1 600 m) to Not lower than 3/4-Mile (1 200 m)	Increase in RPZ dimensions. Refer to table 2-4. Increase in threshold siting standards. Refer to appendix 2, paragraph 5.
Not lower than 3/4-Mile (1 200 m) to Not lower than CAT I	For aircraft approach categories A & B runways: Increase in runway separation standards. Refer to table 2-1. Increase in RPZ dimensions. Refer to table 2-4. Increase in OFZ dimensions. Refer to paragraph 306. Increase in runway design standards. Refer to tables 3-1 and 3-2. Increase in threshold siting standards. Refer to appendix 2, paragraph 5.
	For aircraft approach categories C & D runways: Increase in runway separation standards for ADG I & II runways. Refer to table 2-2. Increase in RPZ dimensions. Refer to table 2-4. Increase in OFZ dimensions. Refer to paragraph 306. Increase in threshold siting standards. Refer to appendix 2, paragraph 5.
Not lower than CAT I to Lower than CAT I	Increase in OFZ dimensions for runways serving large airplanes. Refer to paragraph 306. Increase in threshold siting standards. Refer to appendix 2, paragraph 5.

* In addition to the changes in airport design standards as noted, providing for lower approach visibility minimums may result in an increase in the number of objects identified as obstructions to air navigation in accordance with 14 CFR Part 77. This may require object removal or marking and lighting. Refer to paragraph 211.a.(6).

Chapter 2. AIRPORT GEOMETRY

200. INTRODUCTION. This chapter presents the airport geometric design standards and recommendations to ensure the safety, economy, efficiency, and longevity of an airport.

201. PRINCIPLES OF APPLICATION.

a. Need to Plan. The significance of the interrelationship of the various airport features cannot be overemphasized. It is important that airport owners look to both the present and potential functions of the airport.

(1) Existing and planned airspace required for safe and efficient aircraft operations should be protected by acquisition of a combination of zoning, easements, property interests, and other means. AC 150/5190-4, A Model Zoning Ordinance to Limit Height of Objects Around Airports, presents guidance for controlling the height of objects around airports.

(2) All other existing and planned airport elements, including the following, should be on airport property:

(a) Object free areas;

(b) Runway protection zones;

(c) Areas under the 14 CFR Part 77 Subpart C airport imaginary surfaces out to where the surfaces obtain a height of at least 35 feet (10 m) above the primary surface; and

(d) Areas, other then those which can be adequately controlled by zoning, easements, or other means to mitigate potential incompatible land uses.

b. Airport Functions. Coordination with the FAA and users of the airport should assist in determining the airport's immediate and long range functions which will best satisfy the needs of the community and traveling public. This involves determining the following:

(1) The operating characteristics, sizes, and weights of the airplanes expected at the airport;

(2) The airport reference code (ARC) resulting from (1);

(3) The most demanding meteorological conditions in which airplanes will operate;

(4) The volume and mix of operations;

(5) The possible constraints on navigable airspace; and

(6) The environmental and compatible land-use considerations associated with topography, residential development, schools, churches, hospitals, sites of public assembly, and the like.

c. Airport Layout Plan. When developing the airport layout plan, application of the standards and recommendations in this publication to the long range functions of the airport will establish the future airport geometry. See appendices 6 and 7 for detailed information on the development of the airport layout plan.

202. RUNWAY LOCATION AND ORIENTATION. Runway location and orientation are paramount to airport safety, efficiency, economics, and environmental impact. The weight and degree of concern given to each of the following factors depend, in part, on: the airport reference code; the meteorological conditions; the surrounding environment; topography; and the volume of air traffic expected at the airport.

a. Wind. Appendix 1 provides information on wind data analysis for airport planning and design. Such an analysis considers the wind velocity and direction as related to the existing and forecasted operations during visual and instrument meteorological conditions. It may also consider wind by time of day.

b. Airspace Availability. Existing and planned instrument approach procedures, missed approach procedures, departure procedures, control zones, special use airspace, restricted airspace, and traffic patterns influence airport layouts and locations. Contact the FAA for assistance on airspace matters.

c. Environmental Factors. In developing runways to be compatible with the airport environs, conduct environmental studies which consider the impact of existing and proposed land use and noise on nearby residents, air and water quality, wildlife, and historical/archeological features.

d. Obstructions to Air Navigation. An obstruction survey should identify those objects which may affect airplane operations. Approaches free of obstructions are desirable and encouraged, but as a minimum, locate and orient runways to ensure that the

approach areas associated with the ultimate development of the airport are clear of hazards to air navigation.

e. Topography. Topography affects the amount of grading and drainage work required to construct a runway. In determining runway orientation, consider the costs of both the initial work and ultimate airport development. See chapter 5 and AC 150/5320-5 for further guidance.

f. Airport Traffic Control Tower Visibility. The location and orientation of runways and taxiways must be such that the existing (or future) airport traffic control tower (ATCT) has a clear line of sight to: all traffic patterns; the final approaches to all runways; all runway structural pavement; and, other operational surfaces controlled by ATC. A clear line of sight to taxilane centerlines is desirable. Operational surfaces not having a clear unobstructed line of sight from the ATCT are designated by ATC as uncontrolled or nonmovement areas through a local agreement with the airport owner. See chapter 6 for guidance on airport traffic control tower siting.

g. Wildlife Hazards. In orienting runways, consider the relative locations of bird sanctuaries, sanitary landfills, or other areas which may attract large numbers of birds or wildlife. Where bird hazards exist, develop and implement bird control procedures to minimize such hazards. Guidance is available through local FAA Airports Office.

203. ADDITIONAL RUNWAYS. An additional runway may be necessary to accommodate operational demands, minimize adverse wind conditions, or overcome environmental impacts.

a. Operational Demands. An additional runway, or runways, is necessary when traffic volume exceeds the existing runway's operational capability. With rare exception, capacity-justified runways are parallel to the primary runway. Refer to AC 150/5060-5 for additional discussion.

b. Wind Conditions. When a runway orientation provides less than 95 percent wind coverage for any aircraft forecasted to use the airport on a regular basis, a crosswind runway is recommended. The 95 percent wind coverage is computed on the basis of the crosswind not exceeding 10.5 knots for Airport Reference Codes A-I and B-I, 13 knots for Airport Reference Codes A-II and B-II, 16 knots for Airport Reference Codes A-III, B-III, and C-I through D-III, and 20 knots for Airport Reference Codes A-IV through D-VI. See Appendix 1 for the methodology on computing wind coverage.

c. Environmental Impact. An additional runway may be needed to divert traffic from overflying an environmentally sensitive area.

204. TAXIWAY SYSTEM. As runway traffic increases, the capacity of the taxiway system may become the limiting operational factor. Taxiways link the independent airport elements and require careful planning for optimum airport utility. The taxiway system should provide for free movement to and from the runways, terminal/cargo, and parking areas. It is desirable to maintain a smooth flow with a minimum number of points requiring a change in the airplane's taxiing speed.

a. System Composition. Through-taxiways and intersections comprise the taxiway system. It includes entrance and exit taxiways; bypass, crossover or transverse taxiways; apron taxiways and taxilanes; and parallel and dual parallel taxiways. Chapter 4 discusses taxiway design.

b. Design Principles:

(1) Provide each runway with a parallel taxiway or the capability therefore;

(2) Build taxiways as direct as possible;

(3) Provide bypass capability or multiple access to runway ends;

(4) Minimize crossing runways;

(5) Provide ample curve and fillet radii;

(6) Provide airport traffic control tower line of sight; and

(7) Avoid traffic bottlenecks.

205. AIRPORT APRONS. Chapter 5 contains gradient standards for airport aprons. The tables cited in paragraph 206 present separation criteria applicable to aprons. For other apron criteria, refer to AC 150/5360-13 and Appendix 5 herein.

206. SEPARATION STANDARDS. Tables 2-1, 2-2, and 2-3 present the separation standards depicted in figure 2-1. *The separation distances may need to be increased with airport elevation to meet the runway safety area (RSA) and obstacle free zone (OFZ) standards.* The

computer program cited in appendix 11 may be used to determine the increase to these separation distances for elevation.

207. PARALLEL RUNWAY SEPARATION--SIMULTANEOUS VFR OPERATIONS.

a. Standard. For simultaneous landings and takeoffs using visual flight rules (VFR), the minimum separation between centerlines of parallel runways is 700 feet (214 m).

b. Recommendations. The minimum runway centerline separation distance recommended for Airplane Design Group V and VI runways is 1,200 feet (366 m). Air traffic control practices, such as holding airplanes between the runways, frequently justify greater separation distances. Runways with centerline spacings under 2,500 feet (762 m) are treated as a single runway by ATC when wake turbulence is a factor.

208. PARALLEL RUNWAY SEPARATION--SIMULTANEOUS IFR OPERATIONS. To attain instrument flight rule (IFR) capability for simultaneous (independent) landings and takeoff on parallel runways, the longitudinal (in-trail) separation required for single runway operations is replaced, in whole or in part, by providing lateral separation between aircraft operating to parallel runways. Subparagraphs a and b identify the minimum centerline separations for parallel runways with operations under instrument flight rules (IFR). Where practical, parallel runway centerline separation of at least 5,000 feet (1 525 m) is recommended. Placing the terminal area between the parallel runways minimizes taxi operations across active runways and increases operational efficiency of the airport. Terminal area space needs may dictate greater separations than required for simultaneous IFR operations.

a. Simultaneous Approaches. Precision instrument operations require electronic navigational aids and monitoring equipment, air traffic control, and approach procedures.

(1) Dual simultaneous precision instrument approaches are normally approved on parallel runway centerline separation of 4,300 feet (1 310 m). Further on a case-by-case basis, the FAA will consider proposals utilizing separations down to a minimum of 3,000 feet (915 m) where a 4,300 foot (1 310 m) separation is impractical. This reduction of separation requires special high update radar, monitoring equipment, etc..

(2) Triple simultaneous precision instrument approaches for airports below 1,000 feet (305 m) elevation normally require parallel runway centerline separation of 5,000 feet (1 525 m) between adjacent runways. Triple simultaneous precision instrument approaches for airport elevations at and above 1,000 feet (305 m) and reduction in separation are currently under study by the FAA. In the interim, the FAA, on a case-by-case basis, will consider proposals utilizing separations down to a minimum of 4,300 feet (1 310 m) where a 5,000-foot (1 525 m) separation is impractical or the airport elevation is at or above 1,000 feet (305 m). Reduction of separation may require special radar, monitoring equipment, etc..

(3) Quadruple simultaneous precision instrument approaches are currently under study by the FAA. In the interim, the FAA, on a case-by-case basis, will consider proposals utilizing separations down to a minimum of 5,000 feet (1 525 m). Quadruples may require special radar, monitoring equipment, etc..

b. Simultaneous Departures or Approaches and Departures. Simultaneous departures do not always require radar air traffic control facilities. The following parallel runway centerline separations apply:

(1) Simultaneous Departures.

(a) Simultaneous nonradar departures require a parallel runway centerline separation of at least 3,500 feet (1 067 m).

(b) Simultaneous radar departures require a parallel runway centerline separation of at least 2,500 feet (762 m).

(2) Simultaneous Approach and Departure. Simultaneous radar-controlled approaches and departures require the following parallel runway centerline separations:

(a) When the thresholds are not staggered, at least 2,500 feet (762 m).

(b) When the thresholds are staggered and the approach is to the near threshold, the 2,500-foot (762 m) separation can be reduced by 100 feet (30 m) for each 500 feet (150 m) of threshold stagger to a minimum separation of 1,000 feet (305 m). For Airplane Design Groups V and VI runways, a separation of at least 1,200 feet (366 m) is recommended. See figure 2-2 for a description of "near" and "far" thresholds.

(c) When the thresholds are staggered and the approach is to the far threshold, the minimum 2,500-foot (762 m) separation requires an increase of 100 feet (30 m) for every 500 feet (152 m) of threshold stagger.

209. RUNWAY TO PARALLEL TAXIWAY AND TAXILANE SEPARATION.

a. Standards. Tables 2-1 and 2-2 present the runway centerline to parallel taxiway/taxilane centerline separation standard. This distance is such to satisfy the requirement that no part of an aircraft (tail tip, wing tip) on taxiway/taxilane centerline is within the runway safety area or penetrates the obstacle free zone (OFZ). The computer program cited in appendix 11 may be used to determine the increase to these separation distances for elevation.

b. Recommendations. To have room for the acute-angled exit taxiway, provide a runway centerline to parallel taxiway centerline of at least 400 feet (120 m) for Airplane Design Groups I and II, 500 feet (150 m) for Airplane Design Group III, and 600 feet (180 m) for Airplane Design Groups IV, V, and VI.

210. BUILDING RESTRICTION LINE (BRL). A BRL should be placed on an airport layout plan for identifying suitable building area locations on airports. The BRL should encompass the runway protection zones, the runway object free area, the runway visibility zone (see paragraph 503), NAVAID critical areas, areas required for terminal instrument procedures, and airport traffic control tower clear line of sight.

211. OBJECT CLEARING CRITERIA. Safe and efficient operations at an airport require that certain areas on and near the airport be clear of objects or restricted to objects with a certain function, composition, and/or height. The object clearing criteria subdivides the 14 CFR Part 77, Subpart C, airspace and the object free area (OFA) ground area by type of objects tolerated within each subdivision. Aircraft are controlled by the aircraft operating rules and not by this criteria.

a. Standards. Object clearance requirements are as follows:

(1) Object Free Area (OFA). Object free areas require clearing of objects as specified in paragraph 307, Runway Object Free Area, and paragraph 404, Taxiway and Taxilane Object Free Area (OFA).

(2) Runway and Taxiway Safety Areas. Runway and taxiway safety areas require clearing of objects, except for objects that need to be located in the runway or taxiway safety area because of their function. Objects higher than 3 inches (7.6 cm) above grade should be constructed on low impact resistant supports (frangible mounted structures) of the lowest practical height with the frangible point no higher than 3 inches (7.6 cm) above grade. Other objects, such as manholes, should be constructed at grade. In no case should their height exceed 3 inches (7.6 cm) above grade. Underground fuel storage facilities should not be located within runway and taxiway safety areas (see AC 150/5230-4), Aircraft Fuel Storage, Handling, and Dispensing on Airports). Tables 3-1, 3-2, 3-3, and 4-1 specify runway and taxiway safety area standard dimensions.

(3) Obstacle Free Zone (OFZ). Obstacle Free Zones require clearing of object penetrations, except for frangible visual NAVAIDs that need to be located in the OFZ because of their function. Paragraph 306 specifies OFZ standard dimensions.

(4) Threshold. The threshold obstacle clearance surfaces, defined in Appendix 2, paragraph 5, require clearing of object penetrations.

(5) NAVAIDs. Certain areas require clearing for the establishment and operation of NAVAIDs. These NAVAID critical areas are depicted in chapter 6.

(6) 14 CFR Part 77 Obstructions to Air Navigation. Obstructions to air navigation must be removed unless an FAA aeronautical study, based on proposed operations, determined otherwise. To determine otherwise, the FAA must find no substantial adverse effect as defined in Order 7400.2, Procedures for Handling Airspace Matters, Chapter 7, Evaluating Aeronautical Effect, Section 1, General. The FAA, normally, limits aeronautical studies of existing objects to obstructions to air navigation which are not included in the criteria cited in paragraphs 211a(1) through (5).

(7) Runway Protection Zone (RPZ). The RPZ requires clearing of incompatible objects and activities as specified in paragraphs 212a(1)(a) and 212a(2).

(8) General. Other objects which require clearing are those which generally can have an adverse effect on the airport. These include objects in the inner part of the approach area (coinciding with the RPZ) such as fuel handling and storage facilities, smoke and dust generating activities, misleading lights, and those which may create glare or attract wildlife.

b. Recommendations. Other objects which are desirable to clear, if practicable, are objects which do not have a substantial adverse effect on the airport but, if removed, will enhance operations. These include objects in the controlled activity area and obstructions to air navigation which are not covered in paragraph 211.a, especially those penetrating an approach surface. On a paved runway, the approach surface starts 200 feet (61 m) beyond the area usable for takeoff or landing, whichever is more demanding. On an unpaved runway, the approach surface starts at the end of the area usable for takeoff or landing.

212. RUNWAY PROTECTION ZONE (RPZ). The RPZ's function is to enhance the protection of people and property on the ground. This is achieved through airport owner control over RPZs. Such control includes clearing RPZ areas (and maintaining them clear) of incompatible objects and activities. Control is preferably exercised through the acquisition of sufficient property interest in the RPZ.

a. Standards.

(1) RPZ Configuration/Location. The RPZ is trapezoidal in shape and centered about the extended runway centerline. The controlled activity area and a portion of the Runway OFA are the two components of the RPZ (see figure 2-3). The RPZ dimension for a particular runway end is a function of the type of aircraft and approach visibility minimum associated with that runway end. Table 2-4 provides standard dimensions for RPZs. Other than with a special application of declared distances, the RPZ begins 200 feet (60 m) beyond the end of the area usable for takeoff or landing. With a special application of declared distances, see Appendix 14, separate approach and departure RPZs are required for each runway end.

(a) The Runway OFA. Paragraph 307 contains the location, dimension, and clearing standards for the Runway OFA.

(b) The Controlled Activity Area. The controlled activity area is the portion of the RPZ beyond and to the sides of the Runway OFA.

(2) Land Use. In addition to the criteria specified in paragraph 211, the following land use criteria apply within the RPZ:

(a) While it is desirable to clear all objects from the RPZ, some uses are permitted, provided they do not attract wildlife, are outside of the Runway OFA, and do not interfere with navigational aids. Golf courses (but not club houses) and agricultural operations (other than forestry or livestock farms) are expressly permitted under this proviso. Automobile parking facilities, although discouraged, may be permitted, provided the parking facilities and any associated appurtenances, in addition to meeting all of the preceding conditions, are located outside of the object free area extension (as depicted in figure 2-3). Fuel storage facilities should not be located in the RPZ.

(b) Land uses prohibited from the RPZ are: residences and places of public assembly. (Churches, schools, hospitals, office buildings, shopping centers, and other uses with similar concentrations of persons typify places of public assembly.) Fuel storage facilities should not be located in the RPZ.

b. Recommendations. Where it is determined to be impracticable for the airport owner to acquire and plan the land uses within the entire RPZ, the RPZ land use standards have recommendation status for that portion of the RPZ not controlled by the airport owner.

c. FAA Studies of Objects and Activities in the Vicinity of Airports. The FAA policy is to protect the public investment in the national airport system. To implement this policy, the FAA studies existing and proposed objects and activities, both off and on public-use airports, with respect to their effect upon the safe and efficient use of the airports and safety of persons and property on the ground. These objects need not be obstructions to air navigation, as defined in 14 CFR Part 77. As the result of a study, the FAA may issue an advisory recommendation in opposition to the presence of any off-airport object or activity in the vicinity of a public-use airport that conflicts with an airport planning or design standard or recommendation.

213. to 299. RESERVED

Table 2-1. Runway separation standards for aircraft approach categories A & B

ITEM	DIM 1/	AIRPLANE DESIGN GROUP				
		I 2/	I	II	III	IV
Visual runways and runways with not lower than 3/4-statute mile (1 200 m) approach visibility minimums						
Runway Centerline to:						
Parallel Runway Centerline	H	- Refer to paragraphs 207 and 208 -				
Holdline		- Refer to Advisory Circular 150/5340-1 -				
Taxiway/Taxilane Centerline 3/	D	150 ft 45 m	225 ft 67.5 m	240 ft 72 m	300 ft 90 m	400 ft 120 m
Aircraft Parking Area	G	125 ft 37.5 m	200 ft 60 m	250 ft 75 m	400 ft 120 m	500 ft 150 m
Helicopter Touchdown Pad		- Refer to Advisory Circular 150/5390-2 -				
Runways with lower than 3/4-statute mile (1 200 m) approach visibility minimums						
Runway Centerline to:						
Parallel Runway Centerline	H	- Refer to paragraphs 207 and 208 -				
Holdline		- Refer to Advisory Circular 150/5340-1 -				
Taxiway/Taxilane Centerline 3/	D	200 ft 60 m	250 ft 75 m	300 ft 90 m	350 ft 105 m	400 ft 120 m
Aircraft Parking Area	G	400 ft 120 m	400 ft 120 m	400 ft 120 m	400 ft 120 m	500 ft 150 m
Helicopter Touchdown Pad		- Refer to Advisory Circular 150/5390-2 -				

1/ Letters correspond to the dimensions on figure 2-1.

2/ These dimensional standards pertain to facilities for small airplanes exclusively.

3/ The taxiway/taxilane centerline separation distances are for sea level. At higher elevations, an increase to these separation distances may be required to keep taxiing and holding airplanes clear of the RSA and OFZ (refer to paragraph 206).

Table 2-2. Runway separation standards for aircraft approach categories C & D

ITEM	DIM 1/	AIRPLANE DESIGN GROUP					
		I	II	III	IV	V	VI
Visual runways and runways with not lower than 3/4-statute mile (1 200 m) approach visibility minimums							
Runway Centerline to:							
Parallel Runway Centerline	H	- Refer to paragraphs 207 and 208 -					
Holdline		- Refer to Advisory Circular 150/5340-1 -					
Taxiway/Taxilane Centerline 2/	D	300 ft 90 m	300 ft 90 m	400 ft 120 m	400 ft 120 m	3/ 3/	600 ft 180 m
Aircraft Parking Area	G	400 ft 120 m	400 ft 120 m	500 ft 150 m	500 ft 150 m	500 ft 150 m	500 ft 150 m
Helicopter Touchdown Pad		- Refer to Advisory Circular 150/5390-2 -					
Runways with lower than 3/4-statute mile (1 200 m) approach visibility minimums							
Runway Centerline to:							
Parallel Runway Centerline	H	- Refer to paragraphs 207 and 208 -					
Holdline		- Refer to Advisory Circular 150/5340-1 -					
Taxiway/Taxilane Centerline 2/	D	400 ft 120 m	400 ft 120 m	400 ft 120 m	400 ft 120 m	3/ 3/	600 ft 180 m
Aircraft Parking Area	G	500 ft 150 m	500 ft 150 m	500 ft 150 m	500 ft 150 m	500 ft 150 m	500 ft 150 m
Helicopter Touchdown Pad		- Refer to Advisory Circular 150/5390-2 -					

1/ Letters correspond to the dimensions on figure 2-1.

2/ The taxiway/taxilane centerline separation distances are for sea level. At higher elevations, an increase to these separation distances may be required to keep taxiing and holding airplanes clear of the RSA and OFZ (refer to paragraph 206).

3/ For Airplane Design Group V, the standard runway centerline to parallel taxiway centerline separation distance is 400 feet (120 m) for airports at or below an elevation of 1,345 feet (410 m); 450 feet (135 m) for airports between elevations of 1,345 feet (410 m) and 6,560 feet (2 000 m); and 500 feet (150 m) for airports above an elevation of 6,560 feet (2 000 m).

Table 2-3. Taxiway and taxilane separation standards

ITEM	DIM 1/	AIRPLANE DESIGN GROUP					
		I	II	III	IV	V	VI
Taxiway Centerline to:							
Parallel Taxiway/ Taxilane Centerline	J	69 ft 21 m	105 ft 32 m	152 ft 46.5 m	215 ft 65.5 m	267 ft 81 m	324 ft 99 m
Fixed or Movable Object 2 and 3/	K	44.5 ft 13.5 m	65.5 ft 20 m	93 ft 28.5 m	129.5 ft 39.5 m	160 ft 48.5 m	193 ft 59 m
Taxilane Centerline to:							
Parallel Taxilane Centerline		64 ft 19.5 m	97 ft 29.5 m	140 ft 42.5 m	198 ft 60 m	245 ft 74.5 m	298 ft 91 m
Fixed or Movable Object 2 and 3/		39.5 ft 12 m	57.5 ft 17.5 m	81 ft 24.5 m	112.5 ft 34 m	138 ft 42 m	167 ft 51 m

1/ Letters correspond to the dimensions on figure 2-1.

2/ This value also applies to the edge of service and maintenance roads.

3/ Consideration of the engine exhaust wake impacted from turning aircraft should be given to objects located near runway/taxiway/taxilane intersections.

The values obtained from the following equations may be used to show that a modification of standards will provide an acceptable level of safety. Refer to paragraph 6 for guidance on modification of standards requirements.

Taxiway centerline to parallel taxiway/taxilane centerline equals 1.2 times airplane wingspan plus 10 feet (3 m);

Taxiway centerline to fixed or movable object equals 0.7 times airplane wingspan plus 10 feet (3 m);

Taxilane centerline to parallel taxilane centerline equals 1.1 times airplane wingspan plus 10 feet (3 m); and

Taxilane centerline to fixed or movable object equals 0.6 times airplane wingspan plus 10 feet (3 m).

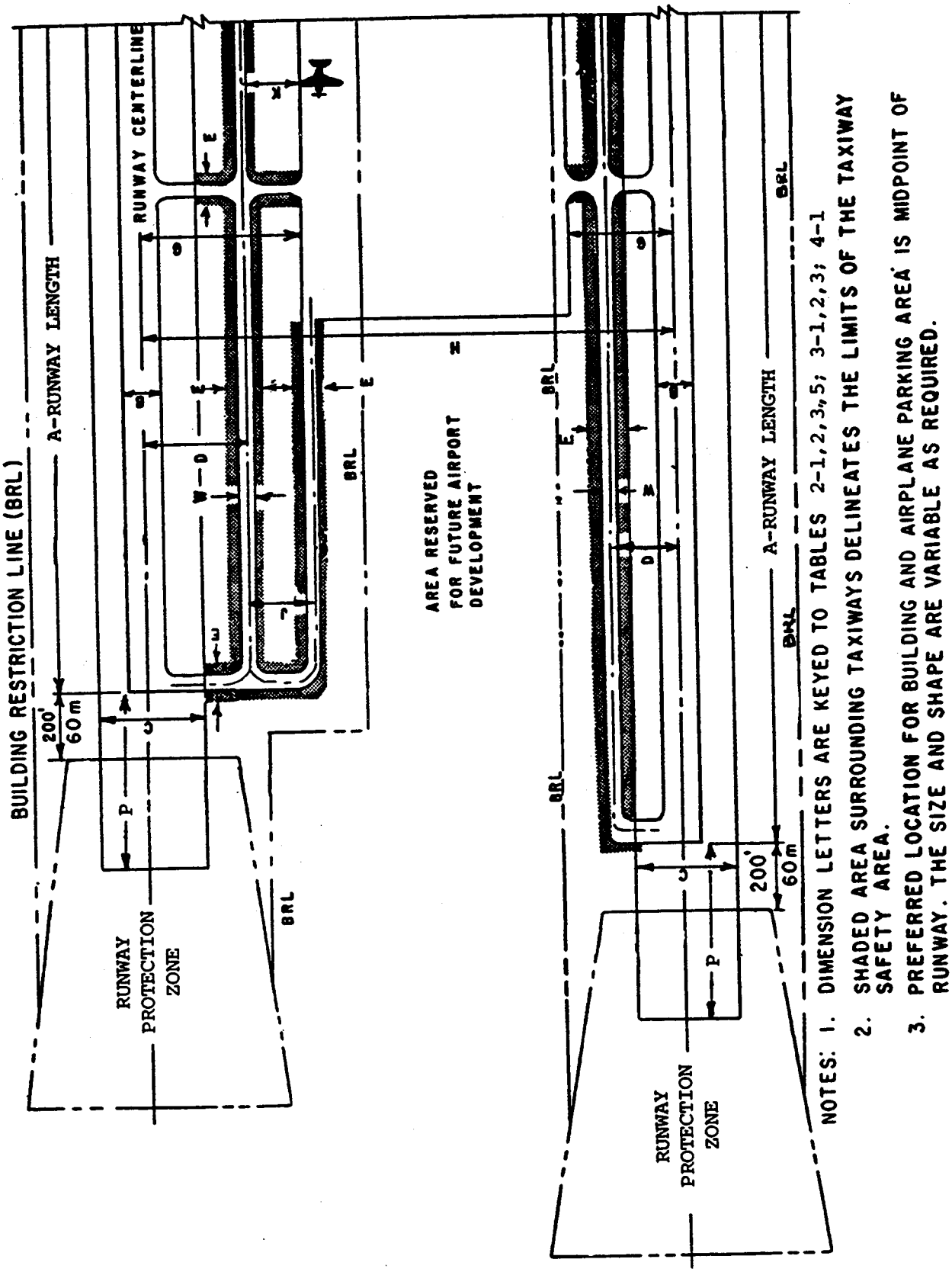

Figure 2-1. Typical airport layout

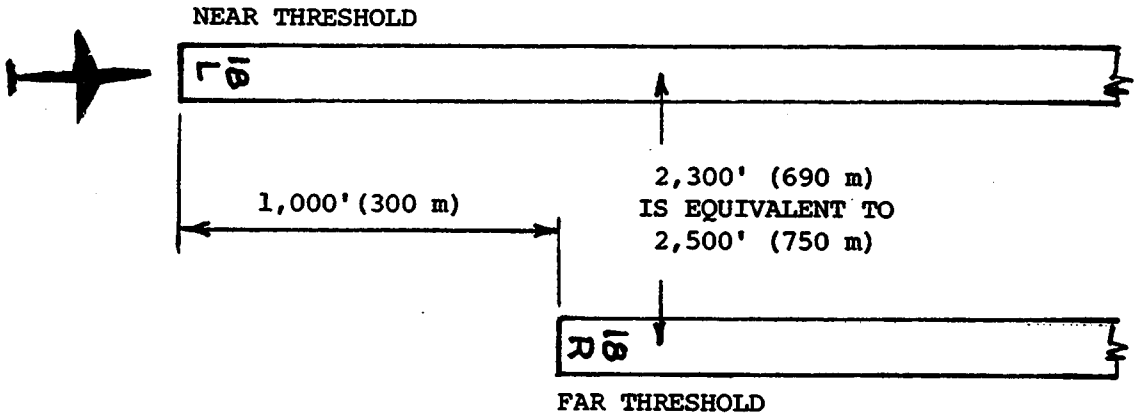

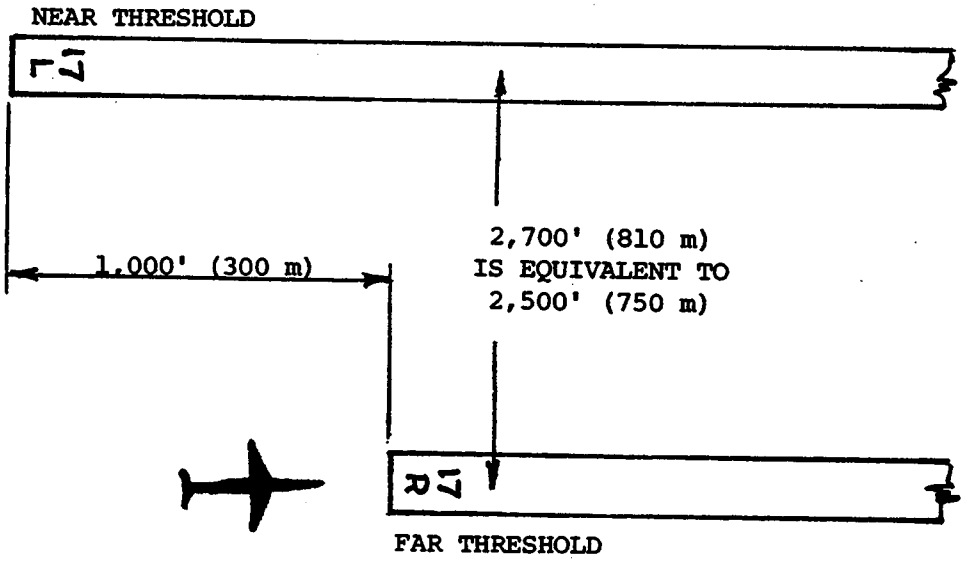

Figure 2-2. Parallel runway separation

Table 2-4. Runway protection zone (RPZ) dimensions

Approach Visibility Minimums 1/	Facilities Expected To Serve	Dimensions			
		Length L feet (meters)	Inner Width W_1 feet (meters)	Outer Width W_2 feet (meters)	RPZ acres
Visual and Not lower than 1-Mile (1 600 m)	Small Aircraft Exclusively	1,000 (300)	250 (75)	450 (135)	8.035
	Aircraft Approach Categories A & B	1,000 (300)	500 (150)	700 (210)	13.770
	Aircraft Approach Categories C & D	1,700 (510)	500 (150)	1,010 (303)	29.465
Not lower than 3/4-Mile (1 200 m)	All Aircraft	1,700 (510)	1,000 (300)	1,510 (453)	48.978
Lower Than 3/4-Mile (1200 m)	All Aircraft	2,500 (750)	1,000 (300)	1,750 (525)	78.914

1/ The RPZ dimensional standards are for the runway end with the specified approach visibility minimums. The departure RPZ dimensional standards are equal to or less than the approach RPZ dimensional standards. When a RPZ begins other than 200 feet (60 m) beyond the runway end, separate approach and departure RPZs should be provided. Refer to appendix 14 for approach and departure RPZs.

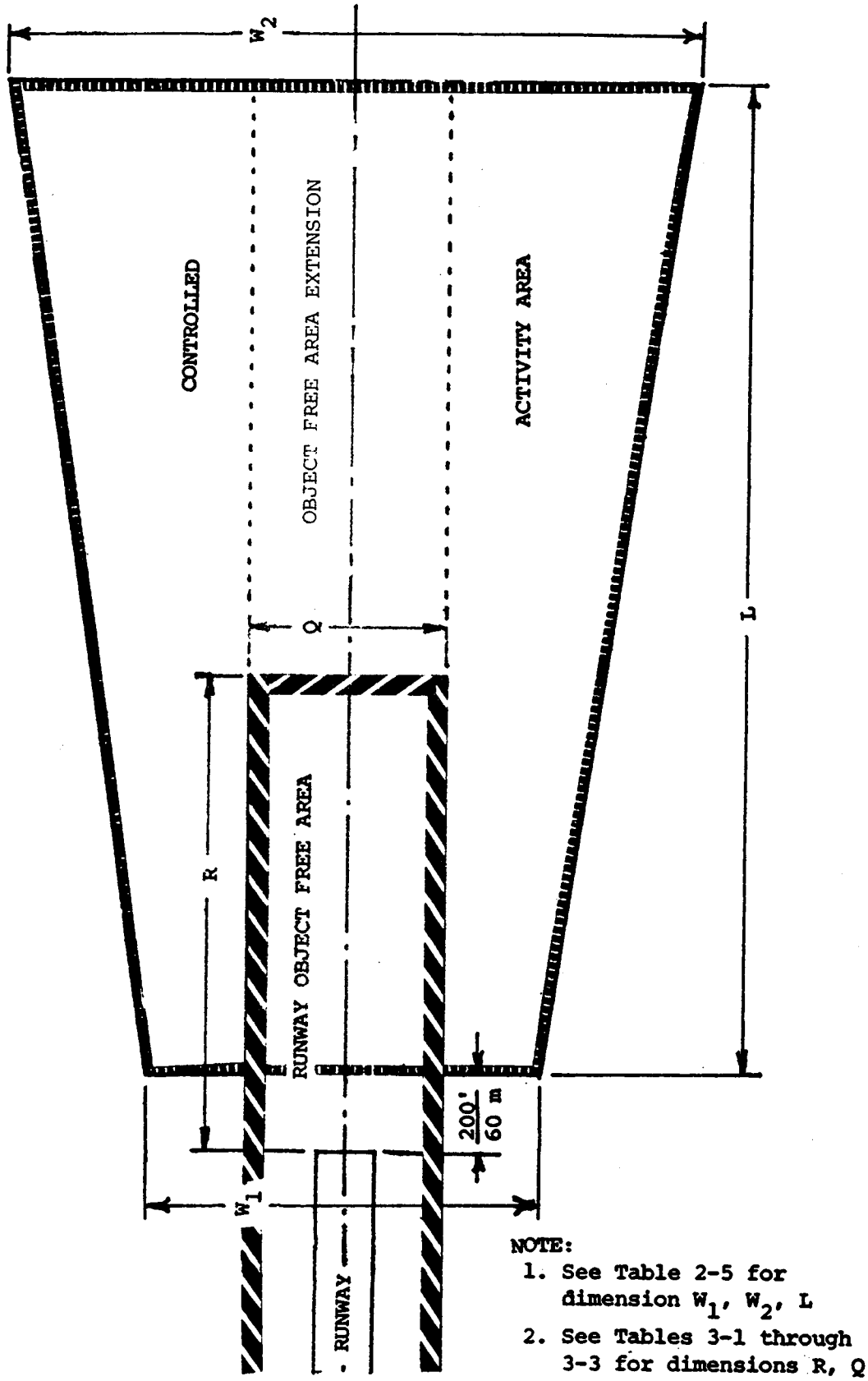

Figure 2-3. Runway protection zone

Chapter 3. RUNWAY DESIGN

300. INTRODUCTION. This chapter presents standards for runways and runway associated elements such as shoulders, blast pads, runway safety areas, obstacle free zones (OFZ), object free areas (OFA), clearways, and stopways. Tables 3-1, 3-2, and 3-3 present the standard widths and lengths for runway and runway associated elements. Also included are design standards and recommendations for rescue and firefighting access roads. At new airports, the RSA and ROFA lengths and the RPZ location standards are tied to runway ends. At existing constrained airports, these criteria may, on a case-by-case basis, be applied with respect to declared distances ends. See appendix 14.

301. RUNWAY LENGTH. AC 150/5325-4 and airplane flight manuals provide guidance on runway lengths for airport design, including declared distance lengths. The computer program cited in appendix 11 may be used to determine the recommended runway length for airport design.

302. RUNWAY WIDTH. Tables 3-1, 3-2, and 3-3 present runway width standards which consider operations conducted during reduced visibility.

303. RUNWAY SHOULDERS. Runway shoulders provide resistance to blast erosion and accommodate the passage of maintenance and emergency equipment and the occasional passage of an airplane veering from the runway. Tables 3-1, 3-2, and 3-3 present runway shoulder width standards. A natural surface, e.g., turf, normally reduces the possibility of soil erosion and engine ingestion of foreign objects. Soil with turf not suitable for this purpose requires a stabilized or low cost paved surface. Refer to chapter 8 for further discussion. Figure 3-1 depicts runway shoulders.

304. RUNWAY BLAST PAD. Runway blast pads provide blast erosion protection beyond runway ends. Tables 3-1, 3-2, and 3-3 contain the standard length and width for blast pads for takeoff operations requiring blast erosion control. Refer to chapter 8 for further discussion. Figure 3-1 depicts runway blast pads.

305. RUNWAY SAFETY AREA (RSA). The runway safety area is centered on the runway centerline. Tables 3-1, 3-2, and 3-3 present runway safety area dimensional standards. Figure 3-1 depicts the runway safety area. Appendix 8 discusses the runway safety area's evolution.

a. Design Standards. The runway safety area shall be:

(1) cleared and graded and have no potentially hazardous ruts, humps, depressions, or other surface variations;

(2) drained by grading or storm sewers to prevent water accumulation;

(3) capable, under dry conditions, of supporting snow removal equipment, aircraft rescue and firefighting equipment, and the occasional passage of aircraft without causing structural damage to the aircraft; and

(4) free of objects, except for objects that need to be located in the runway safety area because of their function. Objects higher than 3 inches (7.6 cm) above grade should be constructed on low impact resistant supports (frangible mounted structures) of the lowest practical height with the frangible point no higher than 3 inches (7.6 cm) above grade. Other objects, such as manholes, should be constructed at grade. In no case should their height exceed 3 inches (7.6 cm) above grade.

b. Construction Standards. Compaction of runway safety areas shall be to FAA specification P-152 found in AC 150/5370-10.

306. OBSTACLE FREE ZONE (OFZ). The OFZ clearing standard precludes taxiing and parked airplanes and object penetrations, except for frangible visual NAVAIDs that need to be located in the OFZ because of their function. The runway OFZ and, when applicable, the inner-approach OFZ, and the inner-transitional OFZ comprise the obstacle free zone (OFZ). Figures 3-2, 3-3, 3-4, and 3-5 show the OFZ.

a. Runway OFZ. The runway OFZ is a defined volume of airspace centered above the runway centerline. The runway OFZ is the airspace above a surface whose elevation at any point is the same as the elevation of the nearest point on the runway centerline. The runway OFZ extends 200 feet (60 m) beyond each end of the runway. Its width is as follows:

(1) For runways serving small airplanes exclusively:

(a) 300 feet (90 m) for runways with lower than 3/4-statute mile (1 200 m) approach visibility minimums.

(b) 250 feet (75 m) for other runways serving small airplanes with approach speeds of 50 knots or more.

(c) 120 feet (36 m) for other runways serving small airplanes with approach speeds of less than 50 knots.

(2) For runways serving large airplanes, 400 feet (120 m).

b. Inner-approach OFZ. The inner-approach OFZ is a defined volume of airspace centered on the approach area. It applies only to runways with an approach lighting system. The inner-approach OFZ begins 200 feet (60 m) from the runway threshold at the same elevation as the runway threshold and extends 200 feet (60 m) beyond the last light unit in the approach lighting system. Its width is the same as the runway OFZ and rises at a slope of 50 (horizontal) to 1 (vertical) from its beginning.

c. Inner-transitional OFZ. The inner-transitional OFZ is a defined volume of airspace along the sides of the runway OFZ and inner-approach OFZ. It applies only to runways with lower than 3/4-statute mile (1 200 m) approach visibility minimums.

(1) For runways serving small airplanes exclusively, the inner-transitional OFZ slopes 3 (horizontal) to 1 (vertical) out from the edges of the runway OFZ and inner-approach OFZ to a height of 150 feet (45 m) above the established airport elevation.

(2) For runways serving large airplanes, separate inner-transitional OFZ criteria apply for Category (CAT) I and CAT II/III runways.

(a) For CAT I runways, the inner-transitional OFZ begins at the edges of the runway OFZ and inner-approach OFZ, then rises vertically for a height "H", and then slopes 6 (horizontal) to 1 (vertical) out to a height of 150 feet (45 m) above the established airport elevation.

1) In U.S. customary units,
$H_{feet} = 61 - 0.094(S_{feet}) - 0.003(E_{feet})$.

2) In SI units,
$H_{meters} = 18.4 - 0.094(S_{meters}) - 0.003(E_{meters})$.

3) S is equal to the most demanding wingspan of the airplanes using the runway and E is equal to the runway threshold elevation above sea level.

(b) For CAT II/III runways, the inner-transitional OFZ begins at the edges of the runway OFZ and inner-approach OFZ, then rises vertically for a height "H", then slopes 5 (horizontal) to 1 (vertical) out to a distance "Y" from runway centerline, and then slopes 6 (horizontal) to 1 (vertical) out to a height of 150 feet (45 m) above the established airport elevation.

1) In U.S. customary units,
$H_{feet} = 53 - 0.13(S_{feet}) - 0.0022(E_{feet})$ and distance
$Y_{feet} = 440 + 1.08(S_{feet}) - 0.024(E_{feet})$.

2) In SI units,
$H_{meters} = 16 - 0.13(S_{meters}) - 0.0022(E_{meters})$ and distance
$Y_{meters} = 132 + 1.08(S_{meters}) - 0.024(E_{meters})$.

3) S is equal to the most demanding wingspan of the airplanes using the runway and E is equal to the runway threshold elevation above sea level. Beyond the distance "Y" from runway centerline the inner-transitional CAT II/III OFZ surface is identical to that for the CAT I OFZ.

307. RUNWAY OBJECT FREE AREA. The runway object free area (OFA) is centered on the runway centerline. The runway OFA clearing standard requires clearing the OFA of above ground objects protruding above the runway safety area edge elevation. Except where precluded by other clearing standards, it is acceptable to place objects that need to be located in the OFA for air navigation or aircraft ground maneuvering purposes and to taxi and hold aircraft in the OFA. Objects non-essential for air navigation or aircraft ground maneuvering purposes are not to be placed in the OFA. This includes parked airplanes and agricultural operations. Tables 3-1, 3-2, and 3-3 specify the standard dimensions of the runway OFA. Extension of the OFA beyond the standard length to the maximum extent feasible is encouraged. See figure 2-3.

308. CLEARWAY STANDARDS. The clearway (See figure 3-6) is a clearly defined area connected to and extending beyond the runway end available for completion of the takeoff operation of turbine-powered airplanes. A clearway increases the allowable airplane operating takeoff weight without increasing runway length.

a. Dimensions. The clearway must be at least 500 feet (150 m) wide centered on the runway centerline. The practical limit for clearway length is 1,000 feet (300 m).

b. Clearway Plane Slope. The clearway plane slopes upward with a slope not greater than 1.25 percent.

c. Clearing. Except for threshold lights no higher than 26 inches (66 cm) and located off the runway sides, no object or terrain may protrude through the clearway plane. The area over which the clearway lies need not be suitable for stopping aircraft in the event of an aborted takeoff.

d. Control. An airport owner interested in providing a clearway should be aware of the requirement that the clearway be under its control, although not necessarily by direct ownership. The purpose of such control is to ensure that no fixed or movable object penetrates the clearway plane during a takeoff operation.

e. Notification. When a clearway is provided, the clearway length and the declared distances, as specified in appendix 14, paragraph 7, shall be provided in the Airport/Facility Directory (and in the Aeronautical Information Publication (AIP), for international airports) for each operational direction.

309. STOPWAY STANDARDS. A stopway is an area beyond the takeoff runway, centered on the extended runway centerline, and designated by the airport owner for use in decelerating an airplane during an aborted takeoff. It must be at least as wide as the runway and able to support an airplane during an aborted takeoff without causing structural damage to the airplane. Their limited use and high construction cost, when compared to a full-strength runway that is usable in both directions, makes their construction less cost effective. See figure 3-7. When a stopway is provided, the stopway length and the declared distances, as specified in appendix 14, paragraph 7, shall be provided in the Airport/Facility Directory (and in the Aeronautical Information Publication (AIP), for international airports) for each operational direction.

310. RESCUE AND FIREFIGHTING ACCESS. Rescue and firefighting access roads are normally needed to provide unimpeded two-way access for rescue and firefighting equipment to potential accident areas. Connecting these access roads, to the extent practical, with the operational surfaces and other roads will facilitate aircraft rescue and firefighting operations.

a. Recommendation. It is recommended that the entire runway safety area (RSA) and runway protection zone (RPZ) be accessible to rescue and firefighting vehicles so that no part of the RSA or RPZ is more than 330 feet (100 m) from either an all weather road or a paved operational surface. Where an airport is adjacent to a body of water, it is recommended that boat launch ramps with appropriate access roads be provided.

b. All Weather Capability. Rescue and firefighting access roads are all weather roads designed to support rescue and firefighting equipment traveling at normal response speeds. Establish the widths of the access roads on a case-by-case basis considering the type(s) of rescue and firefighting equipment available and planned at the airport. The first 300 feet (90 m) adjacent to a paved operational surface should be paved. Where an access road crosses a safety area, the safety area standards for smoothness and grading control. For other design and construction features, use local highway specifications.

c. Road Usage. Rescue and firefighting access roads are special purpose roads which supplement but do not duplicate or replace sections of a multi-purpose road system. Restricting their use to rescue and firefighting access equipment precludes their being a hazard to air navigation.

311. to 399. RESERVED.

Table 3-1. Runway design standards for aircraft approach category A & B visual runways and runways with not lower than 3/4-statute mile (1 200 m) approach visibility minimums

ITEM	DIM 1/	AIRPLANE DESIGN GROUP				
		I 2/	I	II	III	IV
Runway Length	A	- Refer to paragraph 301 -				
Runway Width	B	60 ft 18 m	60 ft 18 m	75 ft 23 m	100 ft 30 m	150 ft 45 m
Runway Shoulder Width		10 ft 3 m	10 ft 3 m	10 ft 3 m	20 ft 6 m	25 ft 7.5 m
Runway Blast Pad Width		80 ft 24 m	80 ft 24 m	95 ft 29 m	140 ft 42 m	200 ft 60 m
Runway Blast Pad Length		60 ft 18 m	100 ft 30 m	150 ft 45 m	200 ft 60 m	200 ft 60 m
Runway Safety Area Width	C	120 ft 36 m	120 ft 36 m	150 ft 45 m	300 ft 90 m	500 ft 150 m
Runway Safety Area Length Beyond RW End 3/	P	240 ft 72 m	240 ft 72 m	300 ft 90 m	600 ft 180 m	1,000 ft 300 m
Obstacle Free Zone Width and Length		- Refer to paragraph 306 -				
Runway Object Free Area Width	Q	250 ft 75 m	400 ft 120 m	500 ft 150 m	800 ft 240 m	800 ft 240 m
Runway Object Free Area Length Beyond RW End 3/	R	240 ft 72 m	240 ft 72 m	300 ft 90 m	600 ft 180 m	1,000 ft 300 m

1/ Letters correspond to the dimensions on figures 2-1 and 2-3.

2/ These dimensional standards pertain to facilities for small airplanes exclusively.

3/ The runway safety area and runway object free area lengths begin at each runway end when stopway is not provided. When stopway is provided, these lengths begin at the stopway end.

Table 3-2. Runway design standards for aircraft approach categories A & B runways with lower than 3/4-statute mile (1 200 m) approach visibility minimums

ITEM	DIM 1/	AIRPLANE DESIGN GROUP				
		I 2/	I	II	III	IV
Runway Length	A	- Refer to paragraph 301 -				
Runway Width	B	75 ft 23 m	100 ft 30 m	100 ft 30 m	100 ft 30 m	150 ft 45 m
Runway Shoulder Width		10 ft 3 m	10 ft 3 m	10 ft 3 m	20 ft 6 m	25 ft 7.5 m
Runway Blast Pad Width		95 ft 29 m	120 ft 36 m	120 ft 36 m	140 ft 42 m	200 ft 60 m
Runway Blast Pad Length		60 ft 18 m	100 ft 30 m	150 ft 45 m	200 ft 60 m	200 ft 60 m
Runway Safety Area Width	C	300 ft 90 m	300 ft 90 m	300 ft 90 m	400 ft 120 m	500 ft 150 m
Runway Safety Area Length Beyond RW End 3/	P	600 ft 180 m	600 ft 180 m	600 ft 180 m	800 ft 240 m	1,000 ft 300 m
Obstacle Free Zone Width and Length		- Refer to paragraph 306 -				
Runway Object Free Area Width	Q	800 ft 240 m	800 ft 240 m	800 ft 240 m	800 ft 240 m	800 ft 240 m
Runway Object Free Area Length Beyond RW End 3/	R	600 ft 180 m	600 ft 180 m	600 ft 180 m	800 ft 240 m	1,000 ft 300 m

1/ Letters correspond to the dimensions on figures 2-1 and 2-3.

2/ These dimensional standards pertain to facilities for small airplanes exclusively.

3/ The runway safety area and runway object free area lengths begin at each runway end when stopway is not provided. When stopway is provided, these lengths begin at the stopway end.

Table 3-3. Runway design standards for aircraft approach categories C & D

ITEM	DIM 1/	AIRPLANE DESIGN GROUP					
		I	II	III	IV	V	VI
Runway Length	A	- Refer to paragraph 301 -					
Runway Width	B	100 ft 30 m	100 ft 30 m	100 ft2/ 30 m2/	150 ft 45 m	150 ft 45 m	200 ft 60 m
Runway Shoulder Width3/		10 ft 3 m	10 ft 3 m	20 ft2/ 6 m2/	25 ft 7.5 m	35 ft 10.5 m	40 ft 12 m
Runway Blast Pad Width		120 ft 36 m	120 ft 36 m	140 ft2/ 42 m2/	200 ft 60 m	220 ft 66 m	280 ft 84 m
Runway Blast Pad Length		100 ft 30 m	150 ft 45 m	200 ft 60 m	200 ft 60 m	400 ft 120 m	400 ft 120 m
Runway Safety Area Width 4/	C	500 ft 150 m	500 ft 150 m	500 ft 150 m	500 ft 150 m	500 ft 150 m	500 ft 150 m
Runway Safety Area Length Beyond RW End 5/	P	1,000 ft 300 m	1,000 ft 300 m	1,000 ft 300 m	1,000 ft 300 m	1,000 ft 300 m	1,000 ft 300 m
Obstacle Free Zone Width and Length		- Refer to paragraph 306 -					
Runway Object Free Area Width	Q	800 ft 240 m	800 ft 240 m	800 ft 240 m	800 ft 240 m	800 ft 240 m	800 ft 240 m
Runway Object Free Area Length Beyond RW End 5/	R	1,000 ft 300 m	1,000 ft 300 m	1,000 ft 300 m	1,000 ft 300 m	1,000 ft 300 m	1,000 ft 300 m

1/ Letters correspond to the dimensions on figures 2-1 and 2-3.

2/ For Airplane Design Group III serving airplanes with maximum certificated takeoff weight greater than 150,000 pounds (68 100 kg), the standard runway width is 150 feet (45 m), the shoulder width is 25 feet (7.5 m), and the runway blast pad width is 200 feet (60 m).

3/ Design Groups V and VI normally require stabilized or paved shoulder surfaces.

4/ For Airport Reference Code C-I and C-II, a runway safety area width of 400 feet (120 m) is permissible. For runways designed after 2/28/83 to serve Aircraft Approach Category D, the runway safety area width increases 20 feet (6 m) for each 1,000 feet (300 m) of airport elevation above MSL. Refer to paragraph 305.

5/ The runway safety area and runway object free area lengths begin at each runway end when stopway is not provided. When stopway is provided, these lengths begin at the stopway end.

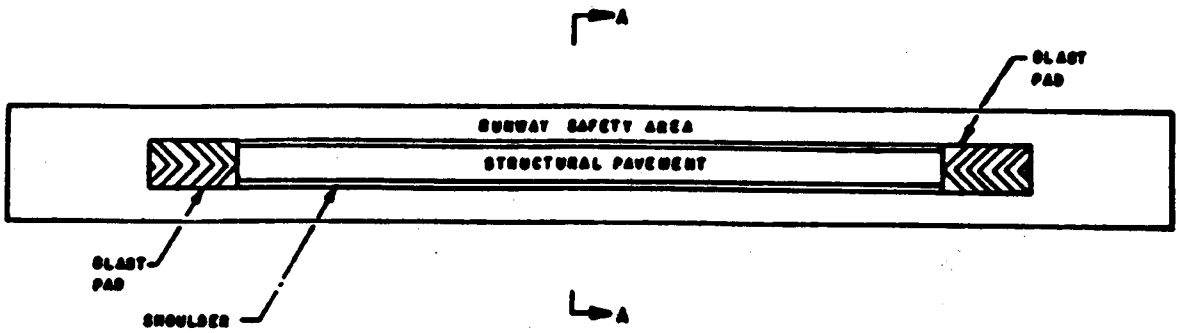

PLAN

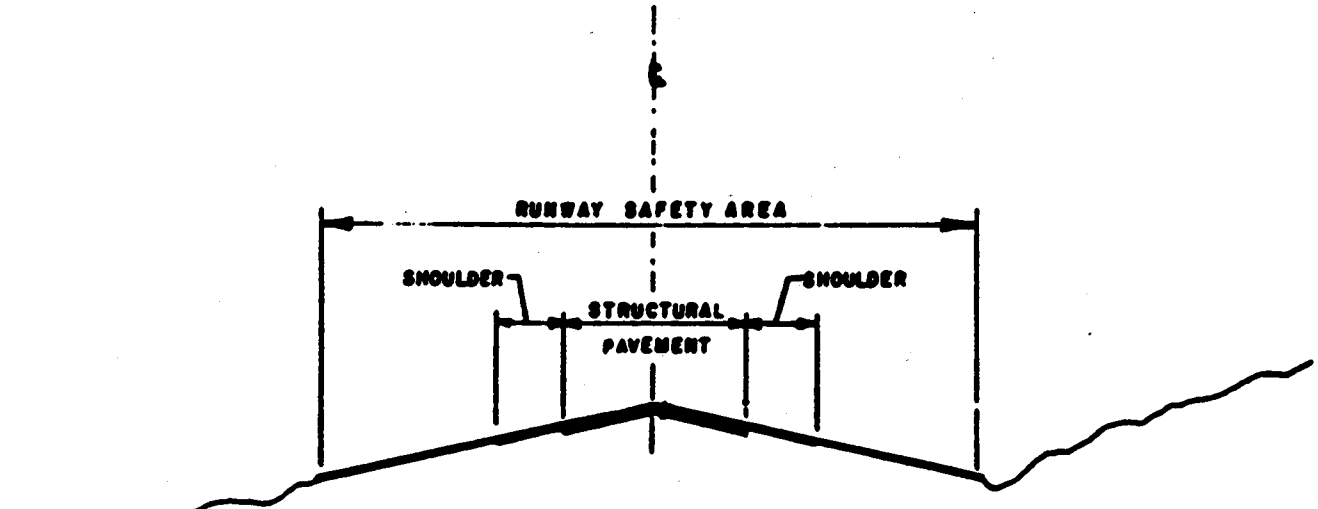

SECTION A-A

Figure 3-1. Runway safety area

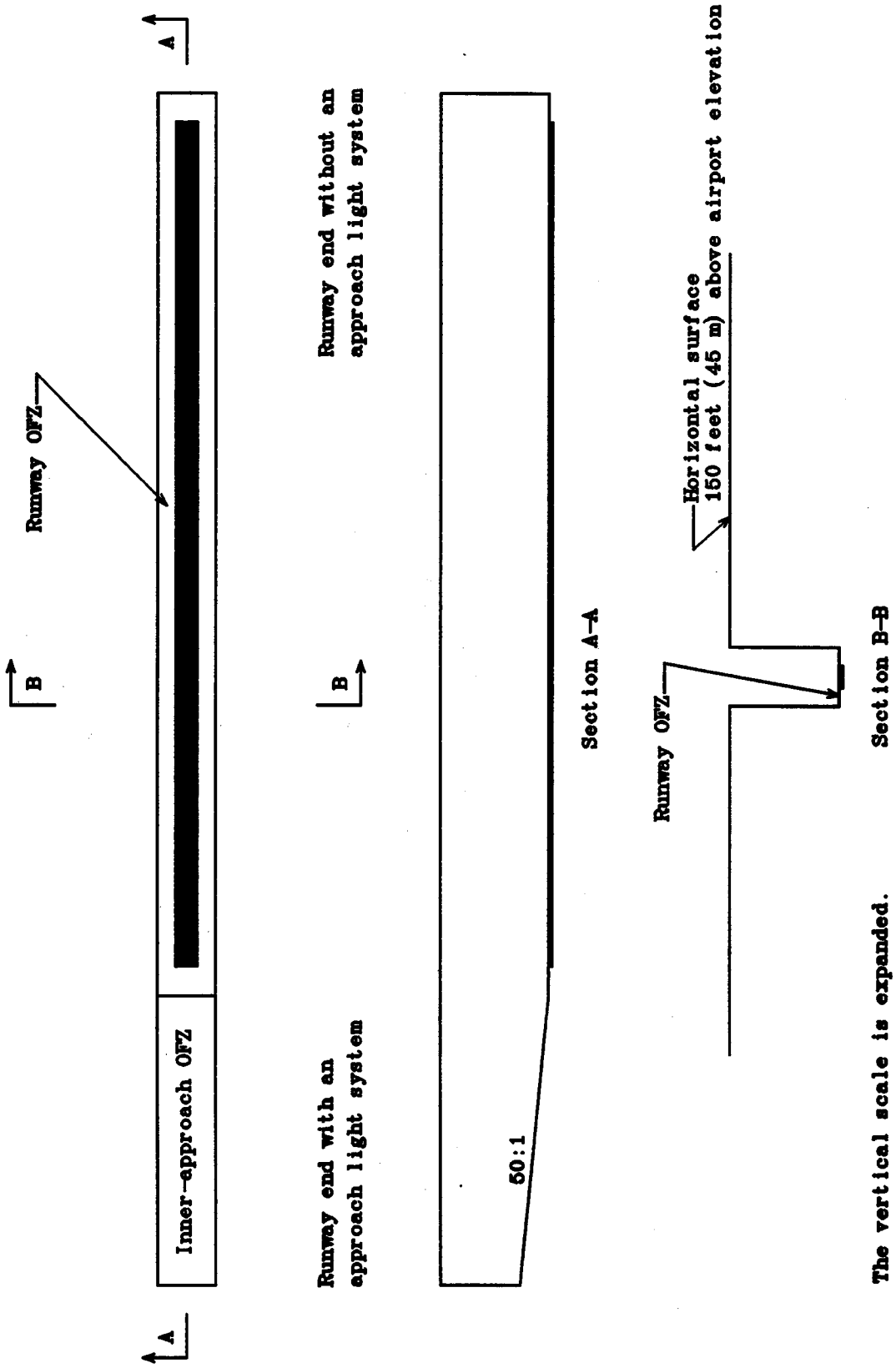

Figure 3-2. Obstacle free zone (OFZ) for visual runways and runways with not lower than 3/4-statute mile (1 200 m) approach visibility minimums

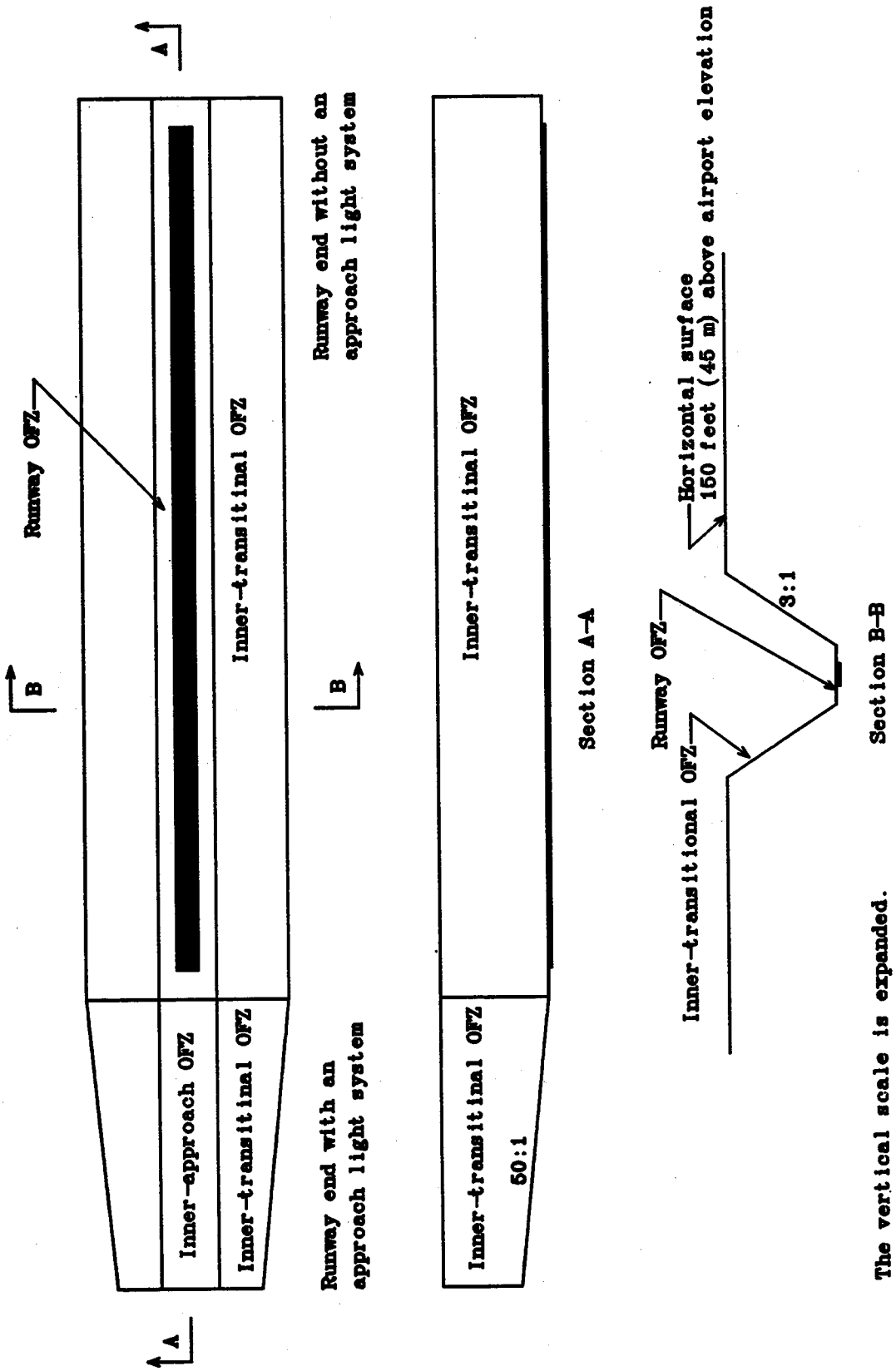

Figure 3-3. Obstacle free zone (OFZ) for runways serving small airplanes exclusively with lower than 3/4-statute mile (1 200 m) approach visibility minimums

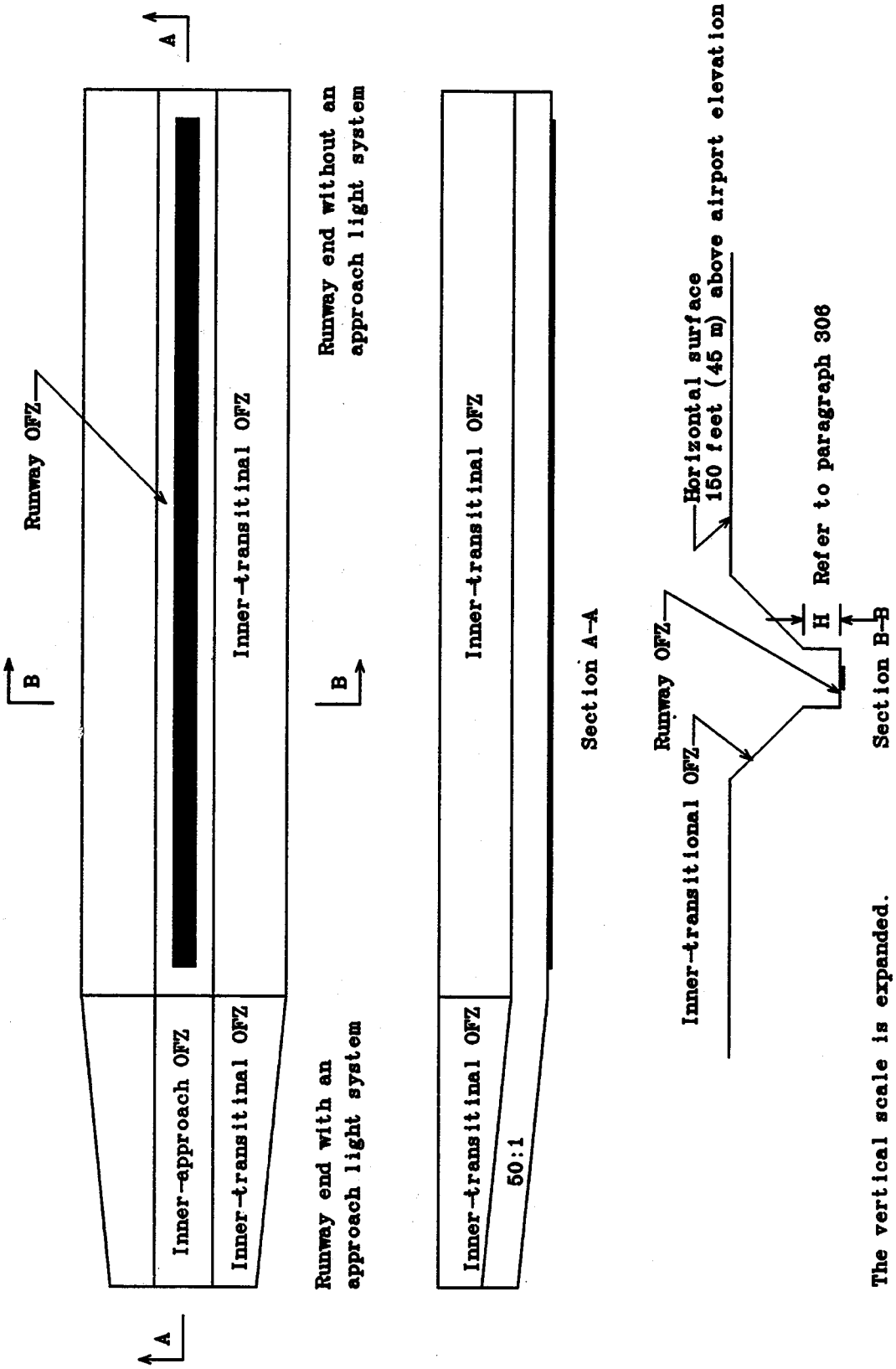

Figure 3-4. Obstacle free zone (OFZ) for runways serving large airplanes with lower than 3/4-statute mile (1 200 m) approach visibility minimums

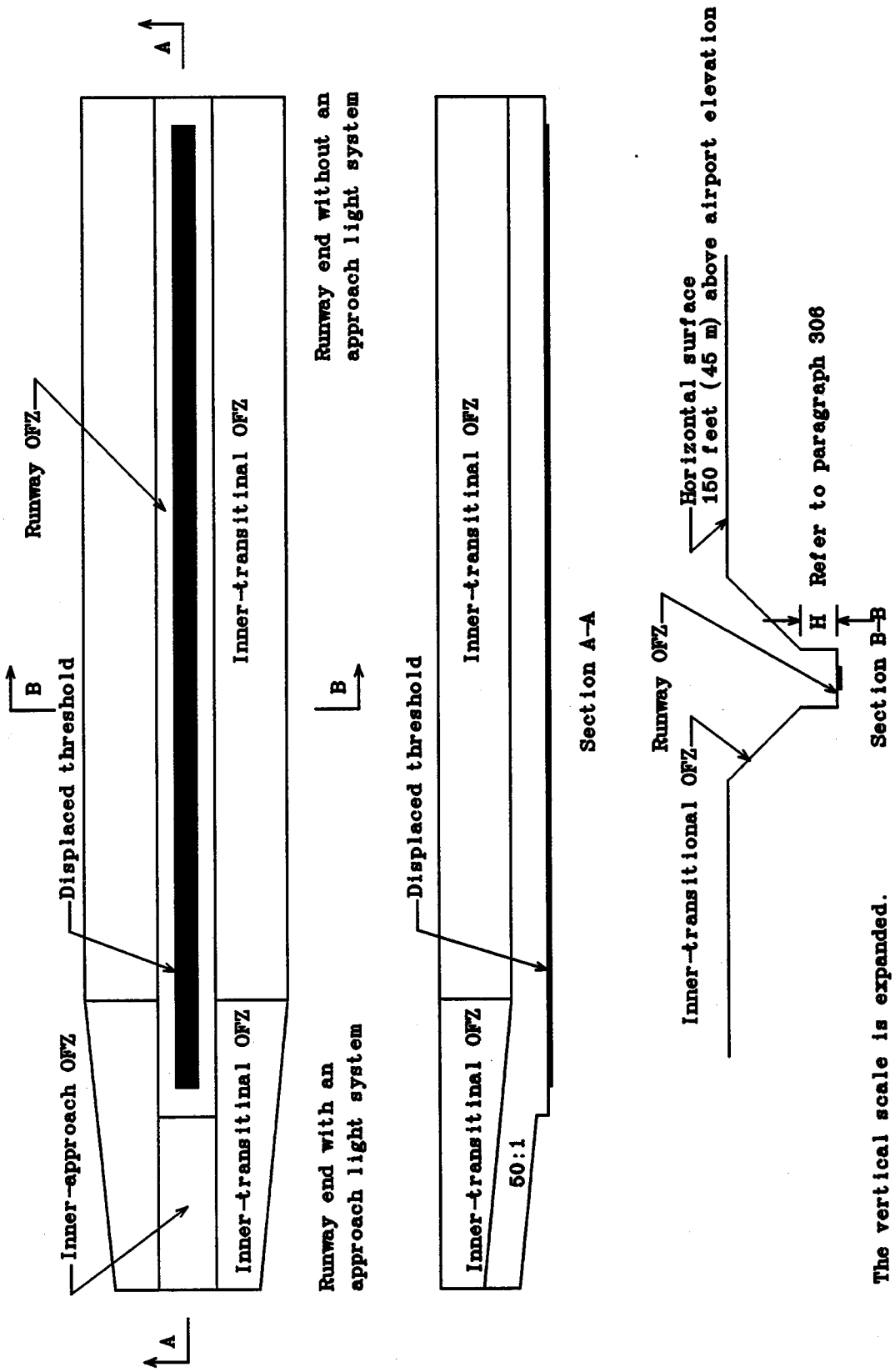

Figure 3-5. Obstacle free zone (OFZ) for runways serving large airplanes with lower than 3/4-statute mile (1 200 m) approach visibility minimums and displaced threshold

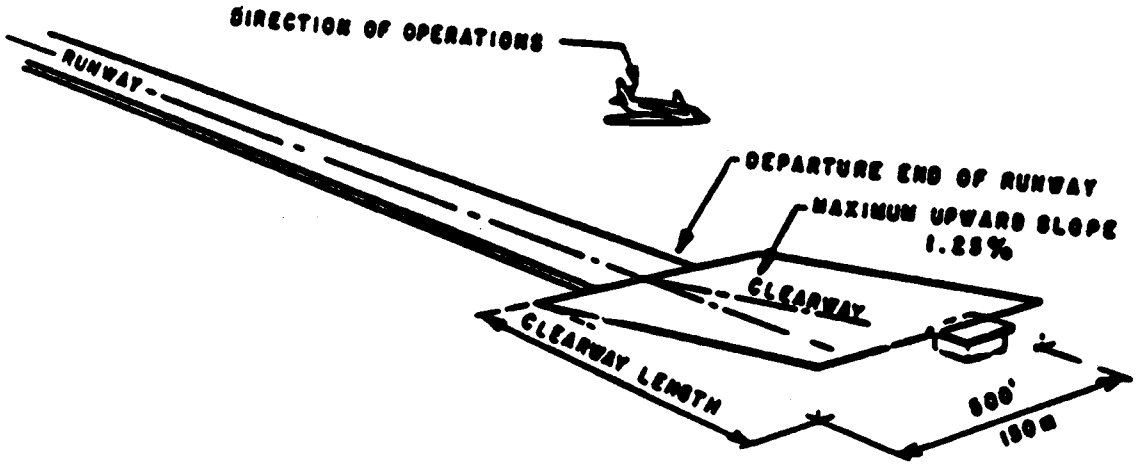

Figure 3-6. Clearway

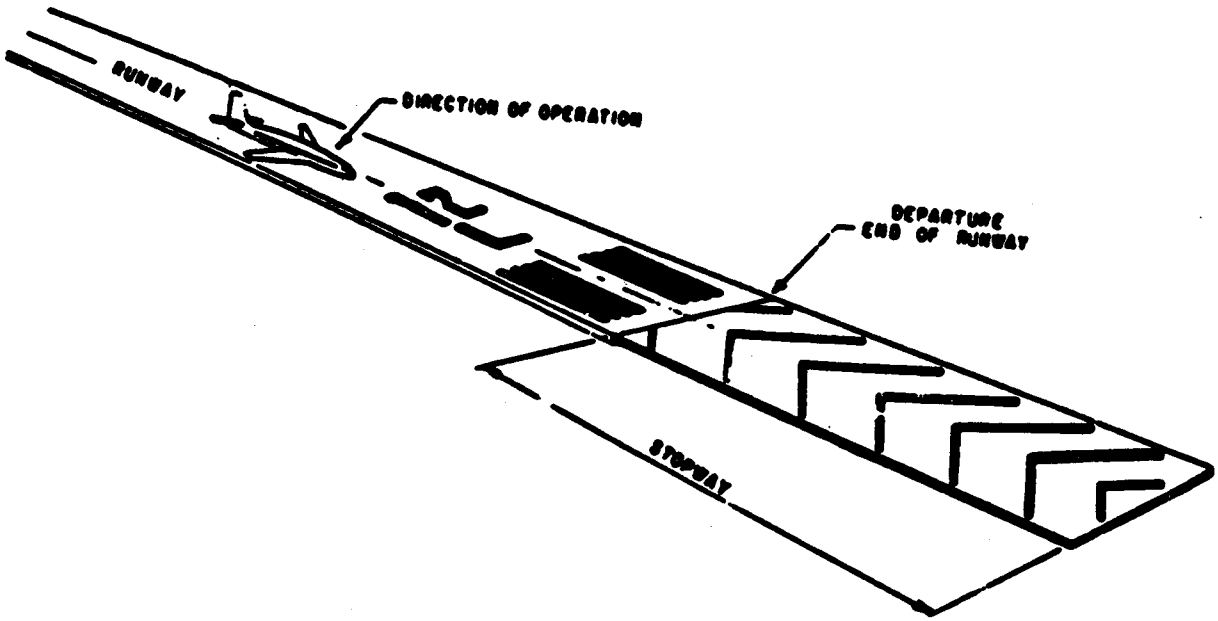

Figure 3-7. Stopway

Chapter 4. TAXIWAY AND TAXILANE DESIGN

400. INTRODUCTION. This chapter presents the design standards for taxiways, taxilanes, and associated airport elements.

401. DIMENSIONAL STANDARDS. Tables 4-1 and 4-2 present the dimensional standards for taxiway, taxilanes, and associated elements. Appendix 9 discusses the relationship between airplane physical characteristics and the design of taxiway and taxilane elements. The rationale presented there is useable, on a case-by-case basis, to adapt separation standards to meet unusual local conditions or to accommodate a specific airplane within an airplane design group.

402. TAXIWAY SHOULDERS. Provide stabilized or paved shoulders to reduce the possibility of blast erosion and engine ingestion problems associated with jet engines which overhang the edge of the taxiway pavement. Table 4-1 presents taxiway shoulder width standards. Soil with turf not suitable for this purpose requires a stabilized or low cost paved surface. Chapter 8 contains additional information on this subject.

403. TAXIWAY SAFETY AREA (TSA). The taxiway safety area is centered on the taxiway centerline. Table 4-1 presents taxiway safety area dimensional standards.

a. Design Standards. The taxiway safety area shall be:

(1) cleared and graded and have no potentially hazardous ruts, humps, depressions, or other surface variations;

(2) drained by grading or storm sewers to prevent water accumulation;

(3) capable, under dry conditions, of supporting snow removal equipment, aircraft rescue and firefighting equipment, and the occasional passage of aircraft without causing structural damage to the aircraft; and

(4) free of objects, except for objects that need to be located in the taxiway safety area because of their function. Objects higher than 3 inches (7.6 cm) above grade should be constructed on low impact resistant supports (frangible mounted structures) of the lowest practical height with the frangible point no higher than 3 inches (7.6 cm) above grade. Other objects, such as manholes, should be constructed at grade. In no case should their height exceed 3 inches (7.6 cm) above grade.

b. Construction Standards. Compaction of taxiway safety areas shall be to FAA specification P-152 found in AC 150/5370-10.

404. TAXIWAY AND TAXILANE OBJECT FREE AREA (OFA). The taxiway and taxilane OFAs are centered on the taxiway and taxilane centerlines as shown in figures A9-2, A9-3, and A9-4.

a. The taxiway and taxilane OFA clearing standards prohibit service vehicle roads, parked airplanes, and above ground objects, except for objects that need to be located in the OFA for air navigation or aircraft ground maneuvering purposes. Vehicles may operate within the OFA provided they give right of way to oncoming aircraft by either maintaining a safe distance ahead or behind the aircraft or by exiting the OFA to let the aircraft pass. Provide vehicular exiting areas along the outside of the OFA where required. Table 4-1 specifies the standard dimensions for OFAs.

b. OFA clearance fillets shall be provided at intersections and turns where curved taxiway or taxilane centerline pavement markings, reflectors, or lighting are provided. The OFA clearance fillets shall be configured to provide the standard wingtip clearance for the using aircraft. Appendix 9 provides guidance for finding the wingtip trace and Table 4-3 specifies the standard wingtip clearances.

c. Offset taxilane pavement markings may be used at existing facilities where it is impracticable to upgrade the facility to existing standards or as a temporary measure to assure adequate wingtip clearance until upgraded facilities meeting design standards are completed. The offset taxilane pavement markings should be located on an arc offset and parallel to the curved centerline. The radius of the offset arc should be approximately $(R^2 + d^2)^{0.5}$. R being the radius of the taxilane turn and d being a representative distance from the center of cockpit to the center of main undercarriage of the larger wingspan aircraft. Increasing the offset radius increases the clearance inside of the curve while decreasing the clearance outside of the curve. Both clearances for each of the larger wingspan aircraft need to be examined. Where offset taxilane pavement markings are provided, centerline lighting or reflectors are required.

405. PARALLEL TAXIWAY. A basic airport consists of a runway with a full length parallel taxiway, an apron, and connecting transverse taxiways between the runway, parallel taxiway, and the apron.

a. Separation Distance. Tables 2-1 and 2-2 show the standard separation distances between parallel taxiways and runways.

b. Centerline Profile. The centerline profile of a parallel taxiway should prevent excessive longitudinal grades on crossover or transverse taxiways. Chapter 5 provides the standards for taxiway longitudinal grades.

406. TAXIWAY INTERSECTIONS. An airplane pilot may negotiate a taxiway turn by either maintaining the cockpit over the centerline or by judgmental oversteering.

a. Cockpit Over Centerline. Taxiway intersections designed to accommodate cockpit over centerline steering require more pavement, but enable more rapid movement of traffic with minimal risk of aircraft excursions from the pavement surface. Intersections should be designed to accommodate cockpit over centerline steering to the extent practicable. Where taxiway centerline lighting or reflectors are installed, intersections shall be designed for cockpit over centerline steering.

b. Judgmental Oversteering. Taxiway intersections designed to accommodate the judgmental oversteering method of maneuvering require the least pavement widening. However, judgmental oversteering requires complex maneuvering, increases the risk of aircraft excursions from the pavement surface, and slows the flow of traffic.

c. Design. Figure 4-1 shows the most common designs of taxiway-taxiway intersections and tables 4-1 and 4-2 present associated dimensional standards. The designs also apply to taxiway-apron intersections. Adjusting these shapes to achieve more efficient construction procedures may be desirable and should be a cost basis consideration. For example, squaring the venturi areas or designing the pavement fillets, by using either the methodology presented in appendix 10 or a computer program to provide the standard taxiway edge safety margin, may produce a more cost effective design. Figure 4-4 is a printout from such a program that is operable on an IBM PC compatible computer. Appendix 11 gives details on availability of this program.

d. Limitations. The criteria depicted in figure 4-1 apply to taxiway-taxiway intersections and taxiway-apron intersections and not to runway-taxiway intersections. Discussion and details on runway-taxiway intersections with accompanying figures are in subsequent paragraphs.

407. ENTRANCE TAXIWAYS.

a. Dual Use. An entrance taxiway also serves as the final exit taxiway on a bidirectional runway. It is normally in the form of an "L" taxiway intersection with a right angle connection to the runway.

b. Radius. The centerline radius of curvature should be as large as possible to accommodate higher speeds. The radius is dependent on the separation distance between the runway and parallel taxiway.

c. Design. The entrance design shown in figure 4-5, with a centerline radius of 200 feet (60 m), will allow entrance speeds of 20 m.p.h. (30 km per hour), the minimum design speed for the taxiway system. Larger radii will permit higher entrance speeds. The design width requires at least the taxiway edge safety margin specified in table 4-1.

408. BYPASS TAXIWAYS. Air traffic personnel at busy airports encounter occasional bottlenecks when moving airplanes ready for departure to the desired takeoff runway. Bottlenecks result when a preceding airplane is not ready for takeoff and blocks the access taxiway. Bypass taxiways provide flexibility in runway use by permitting ground maneuvering of steady streams of departing airplanes. An analysis of existing and projected traffic indicates if a bypass taxiway will enhance traffic flow.

a. Location. Bypass taxiway locations are normally at or near the runway end. They can be parallel to the main entrance taxiway serving the runway, as shown in figure 4-6, or used in combination with the dual parallel taxiways, as depicted in figure 4-7.

b. Design. Bypass taxiway widths require at least the standard taxiway edge safety margin. The separation and clearance standards are the same as for parallel taxiways.

409. HOLDING BAYS. Providing holding bays instead of bypass taxiways also enhances capacity. Holding bays provide a standing space for airplanes awaiting final air traffic control (ATC) clearance and to permit those airplanes already cleared to move to their runway takeoff position. By virtue of their size, they enhance maneuverability for holding airplanes while also permitting bypass operations. A holding bay should be provided when runway operations reach a level of 30 per hour.

a. Location. Although the most advantageous position for a holding bay is adjacent to the taxiway serving the runway end, it may be satisfactory in other locations. Place holding bays to keep airplanes out of the OFZ and

the runway safety area, as well as avoiding interference with instrument landing system operations.

b. Design. Figure 4-8 shows some typical holding bay configurations. Paving the area between dual parallel taxiways may provide an acceptable holding bay.

410. TURNAROUNDS. A turnaround can serve as a combination holding bay and bypass taxiway, when it is not economically feasible to provide a parallel taxiway. The turnaround needs to extend far enough away from the runway so that airplanes will be able to remain behind the hold line. Figure 4-9 shows a taxiway turnaround.

411. DUAL PARALLEL TAXIWAYS. To accommodate high density traffic, airport planners should consider multiple access to runways. For example, to facilitate ATC handling when using directional flow releases, e.g., south departure, west departure, etc., airplanes may be selectively queued on dual (or even triple) parallel taxiways. A dual parallel taxiway need not extend the full length of runway. Crossover taxiways between dual parallel taxiways increase flexibility. See figure 4-10.

412. TAXIWAY BETWEEN PARALLEL RUNWAYS. A taxiway located between two parallel runways requires a centerline separation from each runway to meet the standard separation distance specified in table 2-1.

413. EXIT TAXIWAYS. Design and locate exit taxiways to meet the operational requirements of the airport.

a. Efficiency. Appendix 9 provides guidance on exit taxiway location utilization. AC 150/5060-5 provides guidance on the effect of exit taxiway location on runway capacity. Exit taxiways should permit free flow to the parallel taxiway or at least to a point where air traffic control considers the airplane clear of the runway.

b. Type. A decision to provide a right-angled exit taxiway or a standard acute-angled exit taxiway rests upon an analysis of the existing and contemplated traffic. The purpose of an acute-angled exit taxiway, commonly referred to as a "high speed exit," is to enhance airport capacity. However, when the design peak hour traffic is less than 30 operations (landings and takeoffs), a properly located right-angled exit taxiway will achieve an efficient flow of traffic.

c. Separation. The type of exit taxiway influences runway and taxiway separation. The standard runway-taxiway separations specified in tables 2-1 and 2-2 are satisfactory for right-angled exit taxiways. A separation distance of at least 600 feet (180 m) is necessary for an efficient acute-angled exit taxiway which includes a reverse curve for "double-back" operations. The runway-taxiway separations specified in tables 2-1 and 2-2 are adequate for acute-angled exits where the taxiway traffic flow is in the direction of landing.

d. Configuration. Figure 4-11 illustrates the configuration for a right-angled exit taxiway. An entrance spiral of at least 30 degrees and 300 feet (90 m) in length should be provided. Figure 4-12 illustrates the standard acute-angled exit taxiway with a 30-degree angle of intersection and a 1,400 foot (420 m) entrance spiral. When runway capacity needs justify the additional cost, high visibility taxiway centerline lights can be added and the exit taxiway widened by doubling the taxiway edge safety margin. These design enhancements will increase pilot acceptance of an exit. Figures 4-13 and 4-14 present a computer printout of layout data for a 1,400-foot (420 m) spiral exit using a program operable on IBM compatible equipment. Appendix 11 gives details on the availability of this program.

414. APRON TAXIWAYS AND TAXILANES. Requirements often exist to provide through-taxi routes across an apron and to provide access to gate positions or other terminal areas.

n a. Apron Taxiways. Apron taxiways may be located either inside or outside the movement area. Apron taxiways require the same separations as other taxiways. When the apron taxiway is along the edge of the apron, locate its centerline inward from the apron edge at a distance equal to one-half of the width of the taxiway structural pavement. A shoulder is necessary along the outer edge in addition to the taxiway safety area and the separations specified in tables 2-1, 2-2, 2-3, and 4-1.

b. Taxilanes. Taxilanes are located outside the movement area. Taxilanes provide access from taxiways (usually an apron taxiway) to airplane parking positions and other terminal areas. When the taxilane is along the edge of the apron, locate its centerline inward from the apron edge at a distance equal to one-half of the width of the taxiway structural pavement and satisfy other apron edge taxiway criteria, i.e., a shoulder, safety area, and the separations specified in tables 2-1, 2-2, 2-3, and 4-1.

c. Visibility. Airport traffic control tower personnel require a clear line of sight to all apron taxiways under air traffic control (ATC). Although ATC is not responsible for controlling taxilane traffic, a clear line of sight to taxilanes is desirable.

415. to 499. RESERVED.

Table 4-1. Taxiway dimensional standards

ITEM	DIM 1/	AIRPLANE DESIGN GROUP					
		I	II	III	IV	V	VI
Taxiway Width	W	25 ft 7.5 m	35 ft 10.5 m	50 ft2/ 15 m2/	75 ft 23 m	75 ft 23 m	100 ft 30 m
Taxiway Edge Safety Margin 3/		5 ft 1.5 m	7.5 ft 2.25 m	10 ft4/ 3 m4/	15 ft 4.5 m	15 ft 4.5 m	20 ft 6 m
Taxiway Pavement Fillet Configuration		- Refer to Table 4-2 -					
Taxiway Shoulder Width		10 ft 3 m	10 ft 3 m	20 ft 6 m	25 ft 7.5 m	35 ft5/ 10.5 m5/	40 ft5/ 12 m5/
Taxiway Safety Area Width	E	49 ft 15 m	79 ft 24 m	118 ft 36 m	171 ft 52 m	214 ft 65 m	262 ft 80 m
Taxiway Object Free Area Width		89 ft 27 m	131 ft 40 m	186 ft 57 m	259 ft 79 m	320 ft 97 m	386 ft 118 m
Taxilane Object Free Area Width		79 ft 24 m	115 ft 35 m	162 ft 49 m	225 ft 68 m	276 ft 84 m	334 ft 102 m

1/ Letters correspond to the dimensions on figures 2-1 and 4-1.

2/ For airplanes in Airplane Design Group III with a wheelbase equal to or greater than 60 feet (18 m), the standard taxiway width is 60 feet (18 m).

3/ The taxiway edge safety margin is the minimum acceptable distance between the outside of the airplane wheels and the pavement edge.

4/ For airplanes in Airplane Design Group III with a wheelbase equal to or greater than 60 feet (18 m), the taxiway edge safety margin is 15 feet (4.5 m).

5/ Airplanes in Airplane Design Groups V and VI normally require stabilized or paved taxiway shoulder surfaces.

Consideration should be given to objects near runway/taxiway/taxilane intersections which can be impacted by exhaust wake from a turning aircraft.

The values obtained from the following equations may be used to show that a modification of standards will provide an acceptable level of safety. Refer to paragraph 6 for guidance on modification of standards requirements.

Taxiway safety area width equals the airplane wingspan;

Taxiway OFA width equals 1.4 times airplane wingspan plus 20 feet (6 m); and

Taxilane OFA width equals 1.2 times airplane wingspan plus 20 feet (6 m).

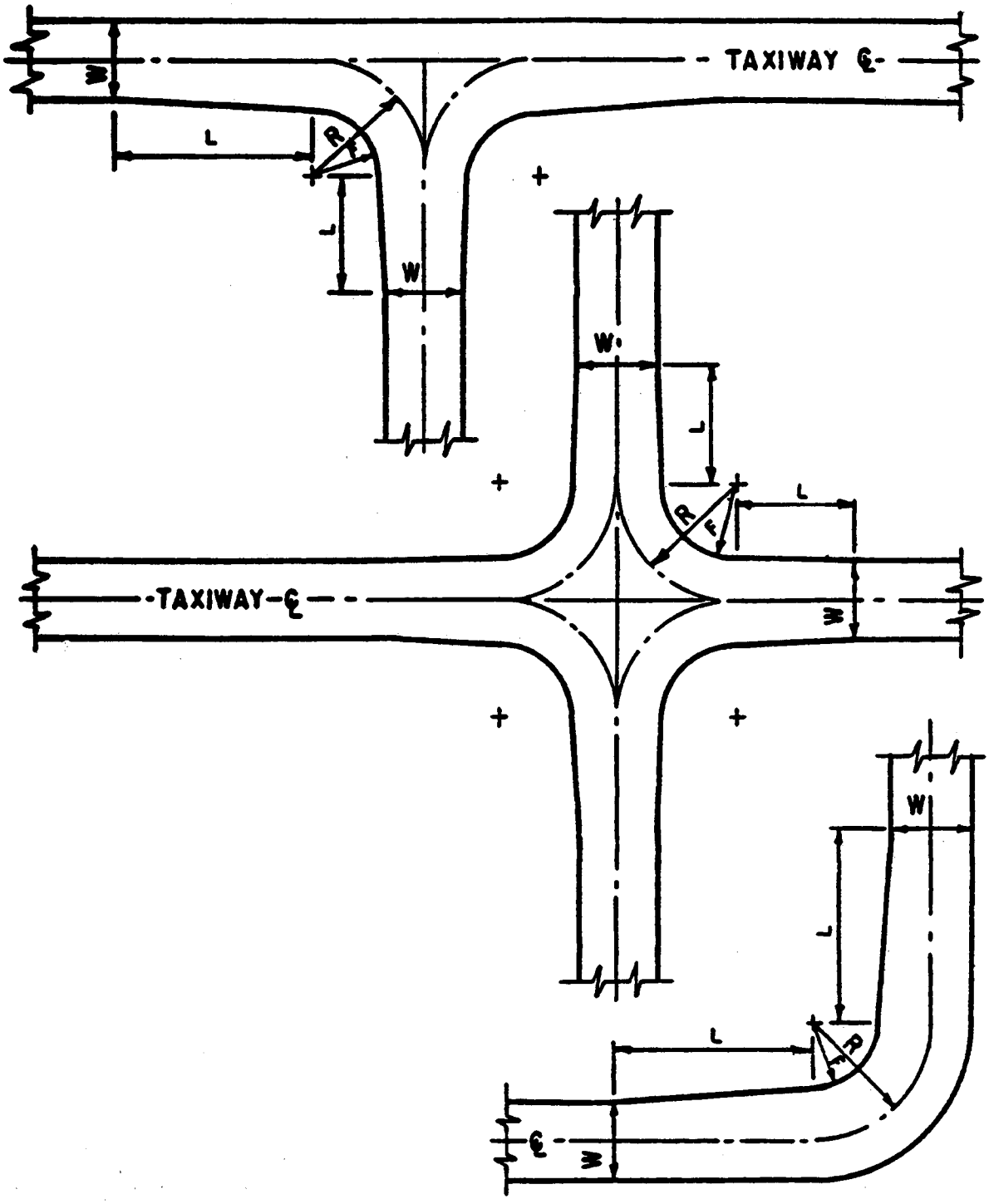

Figure 4-1. Taxiway intersection details

Table 4-2. Taxiway fillet dimensions

ITEM	DIM 1/	AIRPLANE DESIGN GROUP					
		I	II	III 2/	IV	V	VI
Radius of Taxiway Turn 3/	R	75 ft 22.5 m	75 ft 22.5 m	100 ft 30 m	150 ft 45 m	150 ft 45 m	170 ft 51 m
Length of Lead-in to Fillet	L	50 ft 15 m	50 ft 15 m	150 ft 45 m	250 ft 75 m	250 ft 75 m	250 ft 75 m
Fillet Radius for Tracking Centerline	F	60 ft 18 m	55 ft 16.5 m	55 ft 16.5 m	85 ft 25.5 m	85 ft 25.5 m	85 ft 25.5 m
Fillet Radius for Judgmental Oversteering Symmetrical Widening 4/	F	62.5 ft 18.75 m	57.5 ft 17.25 m	68 ft 20.4 m	105 ft 31.5 m	105 ft 31.5 m	110 ft 33 m
Fillet Radius for Judgmental Oversteering One Side Widening 5/	F	62.5 ft 18.75 m	57.5 ft 17.25 m	60 ft 18 m	97 ft 29 m	97 ft 29 m	100 ft 30 m

1/ Letters correspond to the dimensions on figure 4-1.

2/ Airplanes in Airplane Design Group III with a wheelbase equal to or greater than 60 feet (18 m) should use a fillet radius of 50 feet (15 m).

3/ Dimensions for taxiway fillet designs relate to the radius of taxiway turn specified. Figures 4-2 and 4-3 show taxiway fillet designs which provide the standard taxiway edge safety margin for a range of wheelbase and undercarriage width combinations. Custom designed pavement fillet are necessary when the specified "R" or the undercarriage (also undercarriage to cockpit) dimensions fall outside of the standard taxiway edge safety margin of figures 4-2 and 4-3. The equations in appendix 10 or the use of a computer program offer this ability. Appendix 11 gives details on availability of this program.

4/ The center sketch of figure 4-1 displays pavement fillets with symmetrical taxiway widening.

5/ The lower sketch of figure 4-1 displays a pavement fillet with taxiway widening on one side.

Table 4-3. Wingtip clearance standards

ITEM	DIM	AIRPLANE DESIGN GROUP					
		I	II	III	IV	V	VI
Taxiway Wingtip Clearance		20 ft 6 m	26 ft 8 m	34 ft 10.5 m	44 ft 13.5 m	53 ft 16 m	62 ft 19 m
Taxilane Wingtip Clearance		15 ft 4.5 m	18 ft 5.5 m	22 ft 6.5 m	27 ft 8 m	31 ft 9.5 m	36 ft 11 m

The values obtained from the following equations may be used to show that a modification of standards will provide an acceptable level of safety. Refer to paragraph 6 for guidance on modification of standards requirements.

Taxiway wingtip clearance equals 0.2 times airplane wingspan plus 10 feet (3 m) and

Taxilane wingtip clearance equals 0.1 times airplane wingspan plus 10 feet (3 m).

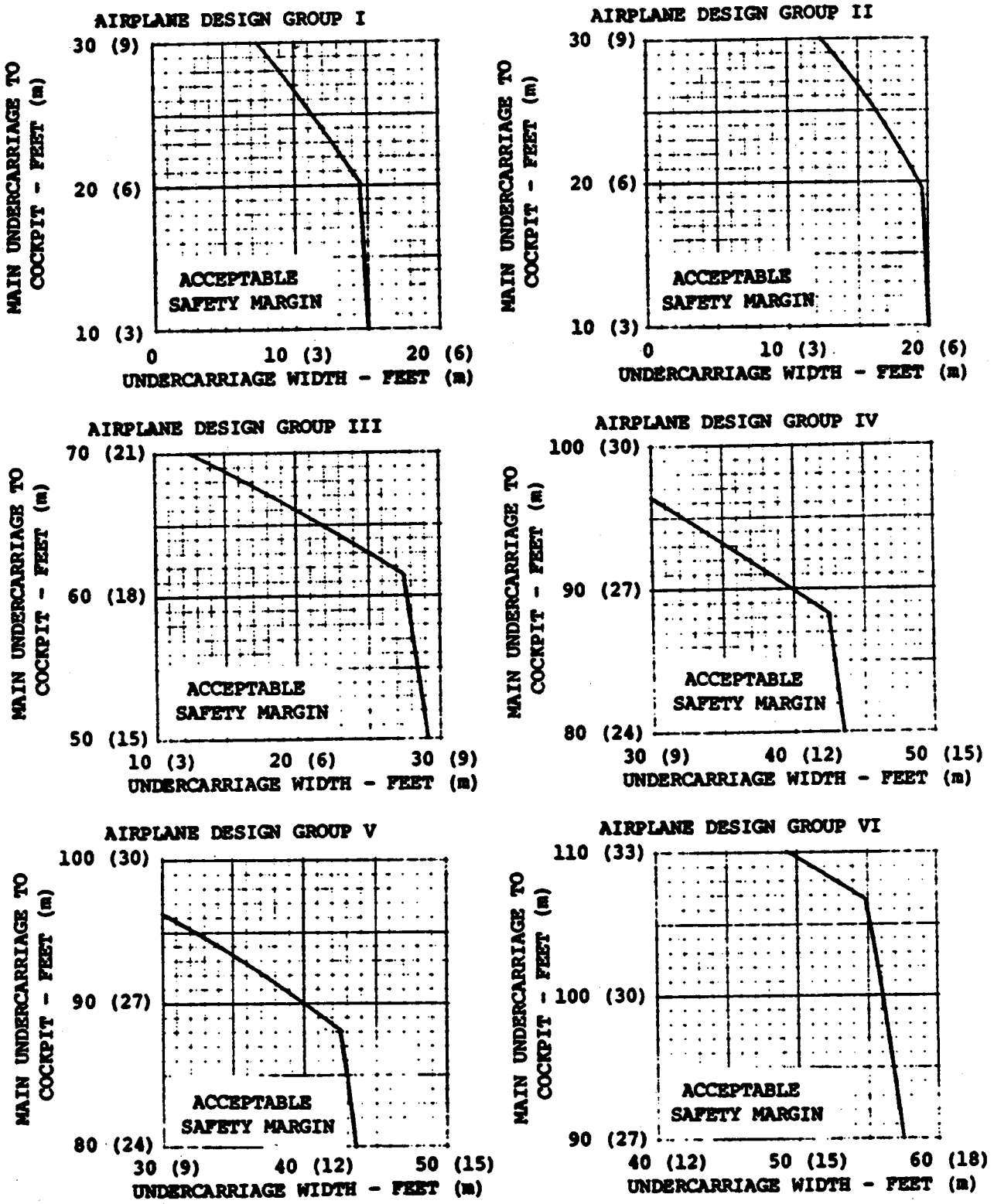

Figure 4-2. Maintaining cockpit over centerline

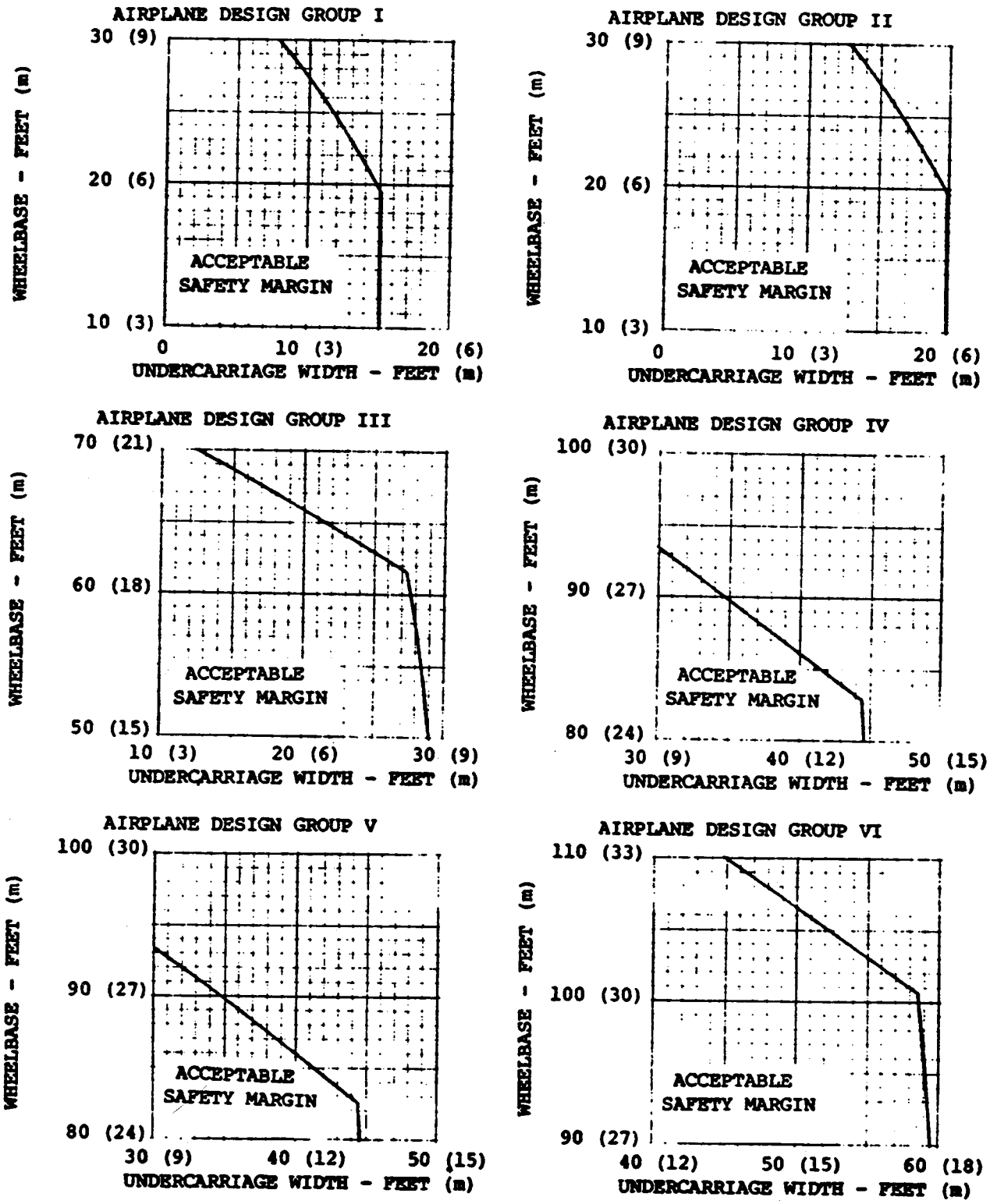

Figure 4-3. Judgmental oversteering

OFFSET DISTANCES ON A TAXIWAY INTERSECTION OR CURVE

Airplane wheelbase	84.000
Center of airplane cockpit to nosewheel	6.000
Airplane undercarriage width [1.15 x main gear track]	41.000
Taxiway edge safety margin	15.000
Taxiway width	75.000

AIRPLANE COCKPIT ON CENTERLINE

Entrance Station	0.000	Radius	150.000
Tangent Length	**********		
Intersection Angle	180.00000	Curve Length	471.239
Tangent Length	**********		
Exit Station	471.239	Radius	150.000

Entrance Station	471.239
Tangent Length	328.761
Exit Station	800.000

STATION	LEFT OFFSET	RIGHT OFFSET	STEERING ANGLES	X COORDINATE	Y COORDINATE	CENTERLINE ANGLE
0.000	43.57	28.58	0.000	0.000	0.000	0.00000
50.000	51.88	19.58	14.676	49.079	8.256	19.09859
100.000	56.92	15.00	23.246	92.755	32.117	38.19718
150.000	60.05	15.00	28.382	126.221	68.955	57.29577
200.000	62.03	15.00	31.528	145.791	114.714	76.39436
250.000	63.28	15.00	33.486	149.311	164.359	95.49295
300.000	64.08	15.00	34.717	136.395	212.422	114.59153
350.000	64.59	15.00	35.496	108.463	253.614	133.69012
400.000	64.74	15.00	35.992	68.591	283.399	152.78871
450.000	61.62	15.00	36.308	21.168	298.499	171.88730
471.239	58.29	15.00	36.405	0.000	300.000	180.00000
471.239	58.29	15.00	36.405	0.000	300.000	180.00000
500.000	51.79	19.88	26.870	-28.761	300.000	180.00000
550.000	44.70	26.51	15.609	-78.761	300.000	180.00000
600.000	40.74	30.32	8.993	-128.761	300.000	180.00000
650.000	38.50	32.52	5.167	-178.761	300.000	180.00000
700.000	37.22	33.79	2.966	-228.761	300.000	180.00000
750.000	0.00	0.00	1.702	-278.761	300.000	180.00000
800.000	0.00	0.00	0.977	-328.761	300.000	180.00000

NOTE: The offset distance is a perpendicular distance measured from the taxiway centerline. The hard surface needs to be widened at stations where the offset distance extends beyond the hard surface.

REFERENCE: AC 150/5300-13, AIRPORT DESIGN.

Figure 4-4. Example of pavement fillet computer program printout

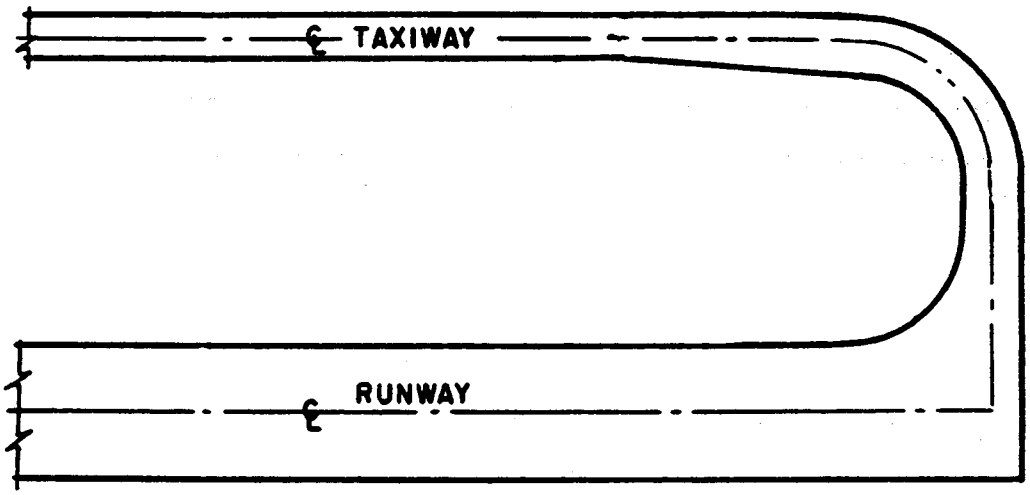

Figure 4-5. Entrance taxiway

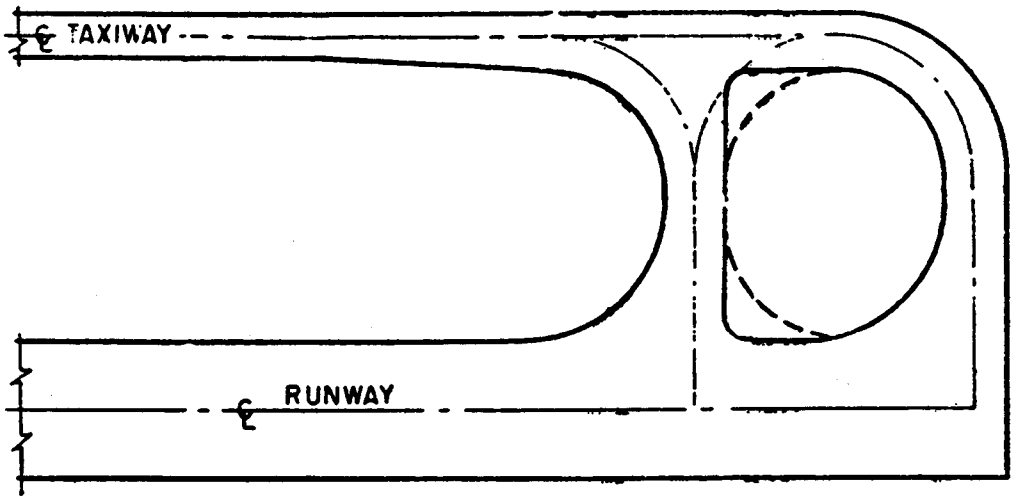

Figure 4-6. Bypass taxiway

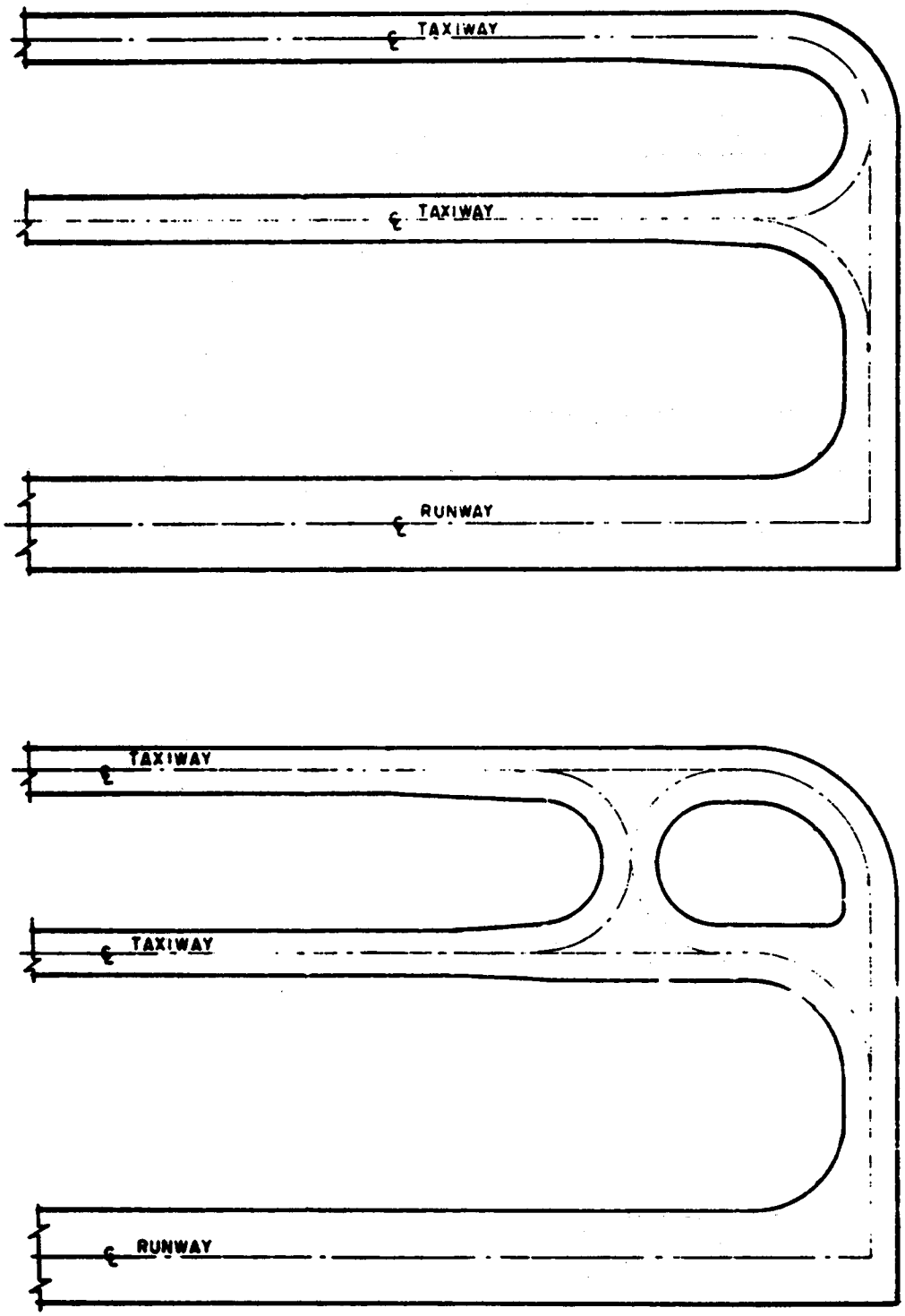

Figure 4-7. Dual parallel taxiway entrance

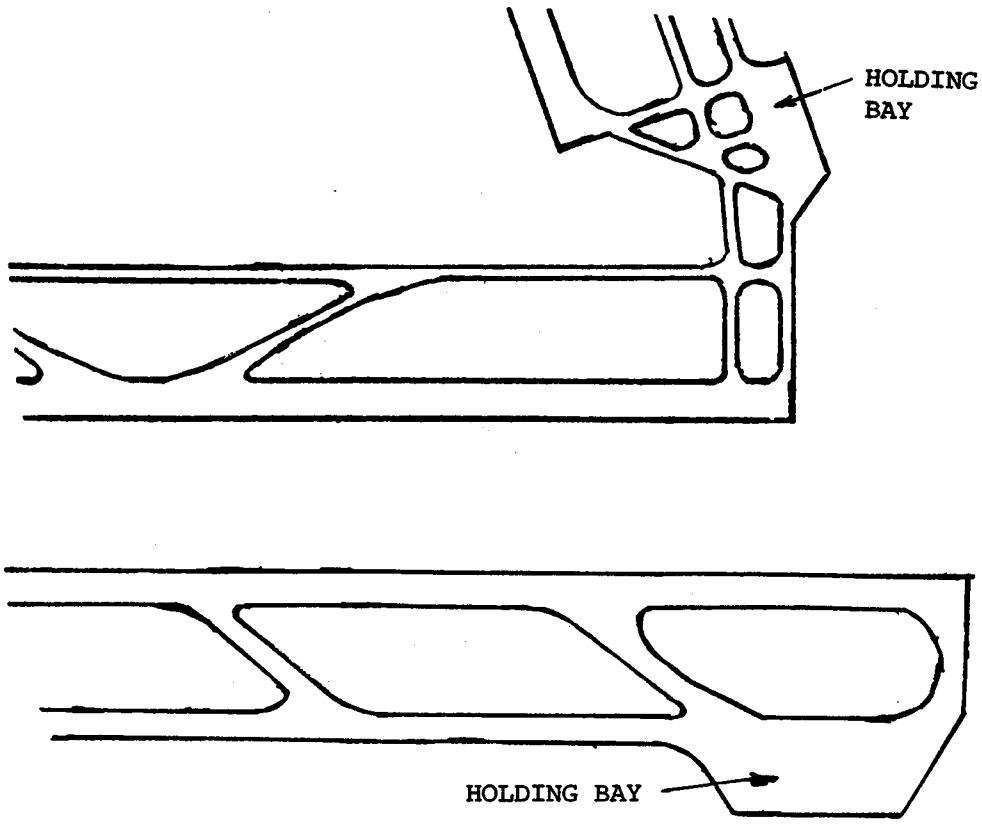

Figure 4-8. Typical holding bay configurations

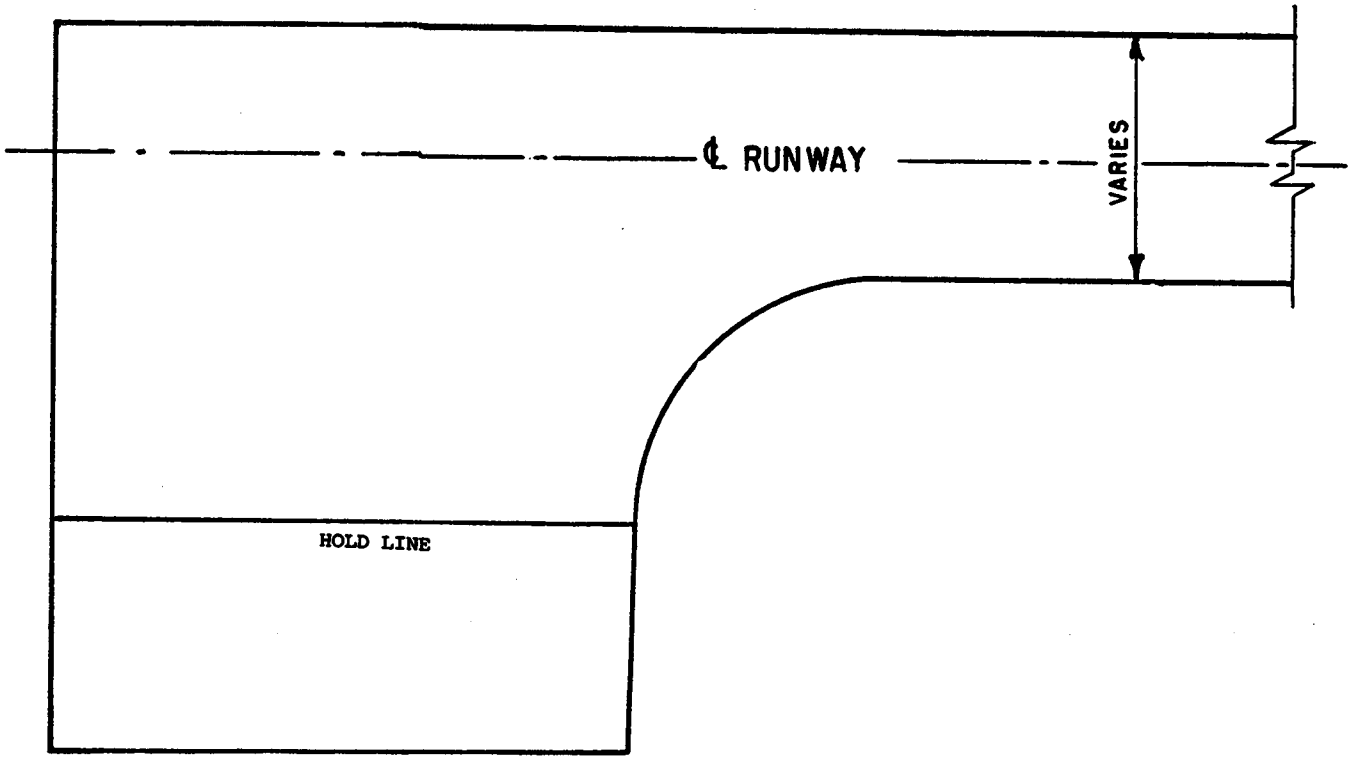

Figure 4-9. Taxiway turnaround

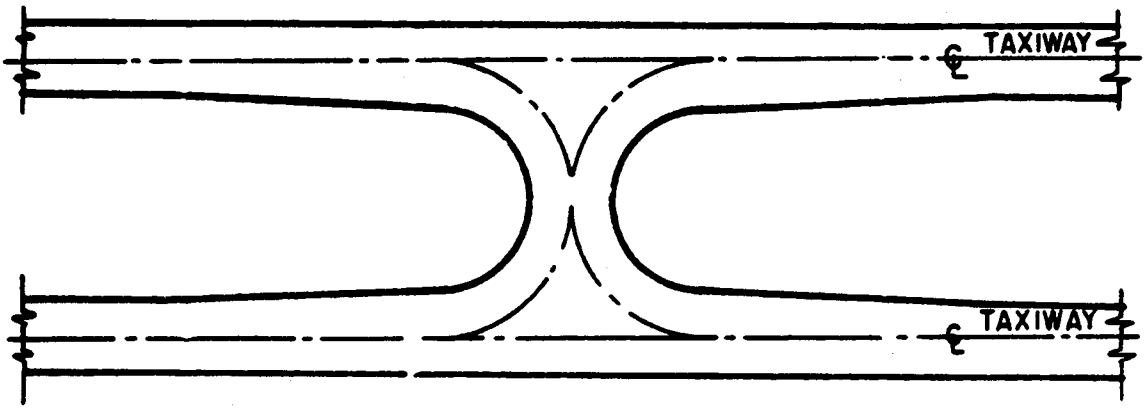

Figure 4-10. Crossover taxiway

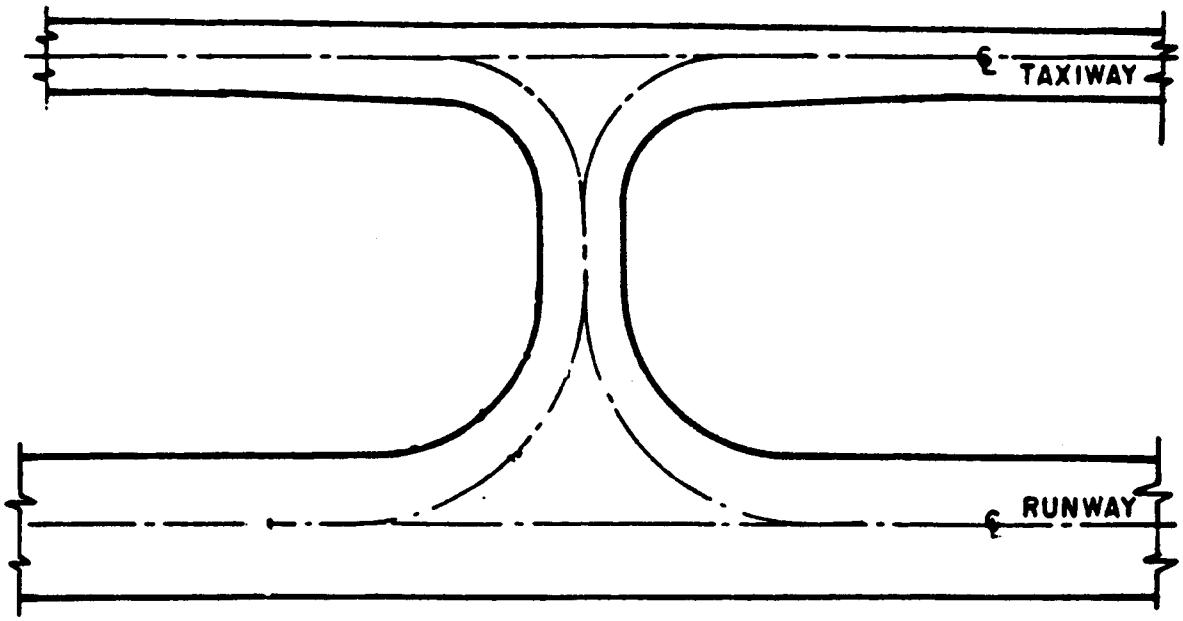

Figure 4-11. Right-angled exit taxiway

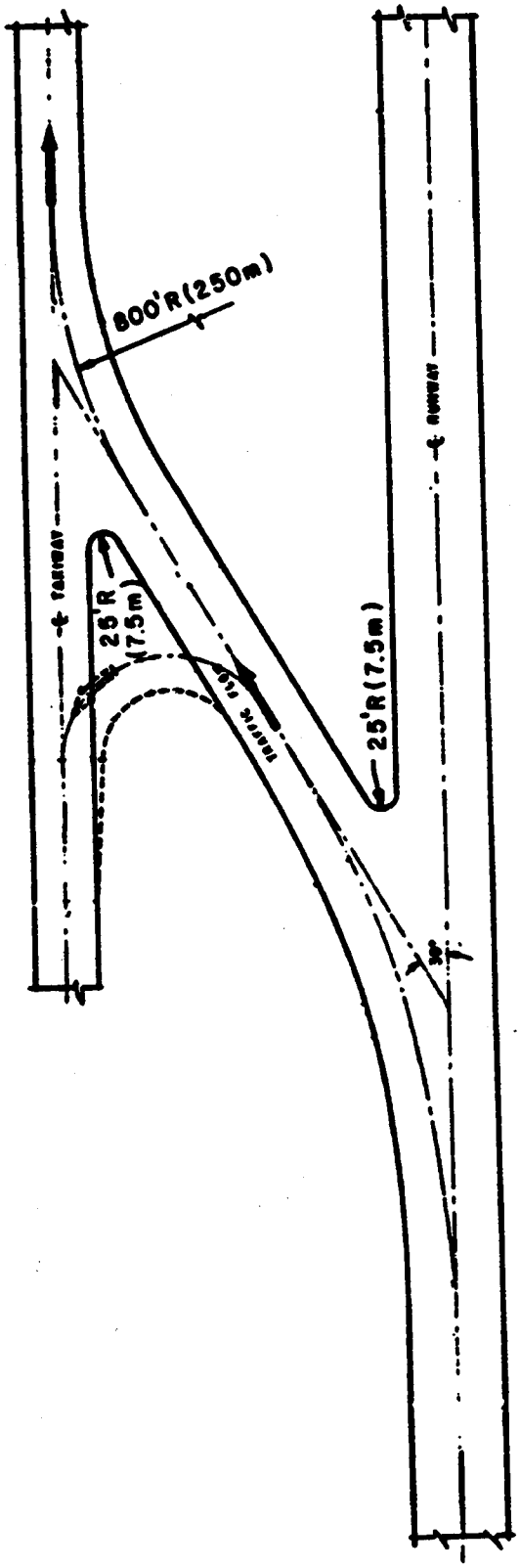

Figure 4-12. Acute-angled exit taxiway

OFFSET DISTANCES ON A RAPID RUNOFF EXIT TAXIWAY

Airplane wheelbase	84.000
Center of airplane cockpit to nosewheel	6.000
Airplane undercarriage width [1.15 x main gear track]	41.000
Taxiway edge safety margin	15.000
Taxiway width	75.000
Runway width	150.000
Runway centerline to parallel taxiway centerline	600.000

AIRPLANE COCKPIT ON CENTERLINE

Entrance Station	0.000		
Tangent Length	947.098		
Intersection Angle	30.00000	Spiral Length	1400.000
Tangent Length	479.205		
Exit Station	1400.000	Radius	1336.902
Entrance Station	1400.000		
Tangent Length	506.435		
Exit Station	1906.435		
Entrance Station	1906.435	Radius	800.000
Tangent Length	214.359		
Intersection Angle	-30.00000	Curve Length	418.879
Tangent Length	214.359		
Exit Station	2325.314	Radius	800.000
Entrance Station	2325.314		
Tangent Length	274.686		
Exit Station	2600.000		

STATION	LEFT OFFSET	RIGHT OFFSET	STEERING ANGLES	X COORDINATE	Y COORDINATE	CENTERLINE ANGLE
0.000	75.01	74.99	0.000	0.000	0.000	0.00000
50.000	75.06	74.94	0.032	50.000	0.011	0.03827
100.000	75.13	74.86	0.109	100.000	0.089	0.15306
150.000	75.20	74.76	0.212	149.999	0.301	0.34439
200.000	75.27	74.63	0.330	199.998	0.712	0.61224
250.000	75.33	74.49	0.456	249.993	1.391	0.95663
300.000	75.37	74.32	0.587	299.983	2.404	1.37755
350.000	75.38	74.12	0.721	349.963	3.818	1.87500
400.000	75.36	73.89	0.857	399.927	5.698	2.44898
450.000	75.31	73.62	0.994	449.868	8.113	3.09949
500.000	75.22	73.31	1.131	499.777	11.127	3.82653
550.000	75.09	72.96	1.268	549.641	14.808	4.63010
600.000	74.90	72.57	1.406	599.445	19.222	5.51020
650.000	74.67	72.11	1.543	649.172	24.432	6.46684
700.000	74.38	71.61	1.681	698.802	30.506	7.50000
750.000	74.02	71.04	1.819	748.308	37.506	8.60969
800.000	73.61	70.40	1.956	797.665	45.497	9.79592

Figure 4-13. Example of acute-angled exit taxiway computer layout data page 1

850.000	73.12	69.70	2.094	846.839	54.541	11.05867
900.000	72.56	68.92	2.232	895.795	64.699	12.39796
950.000	71.92	68.07	2.370	944.493	76.031	13.81378
1000.000	71.20	67.13	2.508	992.887	88.595	15.30612
1050.000	70.40	66.11	2.646	1040.928	102.447	16.87500
1100.000	69.51	65.00	2.784	1088.562	117.640	18.52041
1150.000	68.52	63.80	2.921	1135.729	134.227	20.24235
1200.000	67.45	62.51	3.059	1182.363	152.255	22.04082
1250.000	66.27	61.11	3.197	1228.396	171.768	23.91582
1300.000	64.99	59.62	3.335	1273.752	192.807	25.86735
1350.000	63.53	58.11	3.473	1318.349	215.408	27.89541
1400.000	61.32	57.15	3.611	1362.102	239.603	30.00000
1400.000	61.32	57.15	3.611	1362.102	239.603	30.00000
1450.000	58.78	56.38	2.072	1405.404	264.603	30.00000
1500.000	56.62	55.25	1.189	1448.705	289.603	30.00000
1550.000	54.68	53.89	0.682	1492.006	314.603	30.00000
1600.000	52.87	52.42	0.391	1535.307	339.603	30.00000
1650.000	51.13	50.87	0.225	1578.609	364.603	30.00000
1700.000	49.43	49.28	0.129	1621.910	389.603	30.00000
1750.000	47.75	47.66	0.074	1665.211	414.603	30.00000
1800.000	46.08	46.04	0.042	1708.512	439.603	30.00000
1850.000	44.35	44.48	0.024	1751.814	464.603	30.00000
1900.000	41.70	43.86	0.014	1795.115	489.603	30.00000
1906.435	41.24	43.91	0.013	1800.688	492.820	30.00000
1906.435	41.24	43.91	0.013	1800.688	492.820	30.00000
1950.000	38.43	43.96	-2.465	1838.991	513.565	26.87989
2000.000	36.05	43.54	-4.163	1884.266	534.763	23.29890
2050.000	34.28	42.90	-5.138	1930.776	553.092	19.71791
2100.000	32.94	42.21	-5.699	1978.341	568.480	16.13693
2150.000	31.94	41.58	-6.022	2026.774	580.867	12.55594
2200.000	31.21	41.08	-6.208	2075.886	590.205	8.97495
2250.000	30.75	40.72	-6.314	2125.485	596.457	5.39397
2300.000	31.03	40.03	-6.376	2175.378	599.599	1.81298
2325.314	31.82	39.22	-6.396	2200.688	600.000	0.00000
2325.314	31.82	39.22	-6.396	2200.688	600.000	0.00000
2350.000	32.70	38.32	-4.864	2225.374	600.000	0.00000
2400.000	33.89	37.12	-2.792	2275.374	600.000	0.00000
2450.000	34.58	36.43	-1.602	2325.374	600.000	0.00000
2500.000	34.97	36.03	-0.919	2375.374	600.000	0.00000
2550.000	0.00	0.00	-0.527	2425.374	600.000	0.00000
2600.000	0.00	0.00	-0.303	2475.374	600.000	0.00000

NOTE: The offset distance is a perpendicular distance measured from the taxiway centerline. The hard surface needs to be widened at stations where the offset distance extends beyond the hard surface.

REFERENCE: AC 150/5300-13, AIRPORT DESIGN.

Figure 4-14. Example of acute-angled exit taxiway computer layout data page 2

Chapter 5. SURFACE GRADIENT AND LINE OF SIGHT

500. INTRODUCTION. This chapter presents gradient and line of sight standards. The standards apply to the design of airport surfaces required for the landing, takeoff, and ground movement of airplanes.

501. BACKGROUND. Surface gradients should allow design flexibility without adversely affecting operational safety. Line of sight standards impose additional restraints on surface gradients. It is important that the pilot and air traffic controller see the runway and taxiway surfaces to assure that the runways and taxiways are clear of aircraft, vehicles, wildlife, and other hazardous objects.

502. SURFACE GRADIENT STANDARDS.

a. Runway and Stopway.

(1) Aircraft Approach Categories A and B. The longitudinal and transverse gradient standards for runways and stopways are as follows and as illustrated in figures 5-1 and 5-2.

(a) The maximum longitudinal grade is ±2 percent. It is desirable to keep longitudinal grades to a minimum.

(b) The maximum allowable grade change is ±2 percent. Use longitudinal grade changes only when absolutely necessary.

(c) Vertical curves for longitudinal grade changes are parabolic. The length of the vertical curve is a minimum of 300 feet (90 m) for each 1 percent of change. No vertical curve is necessary when the grade change is less than 0.4 percent.

(d) The minimum allowable distance between the points of intersection of vertical curves is 250 feet (75 m) multiplied by the sum of the grade changes (in percent) associated with the two vertical curves.

(e) Figure 5-2 presents maximum and minimum transverse grades for runways and stopways. In all cases, keep transverse grades to a minimum, consistent with local drainage requirements.

(f) Provide a smooth transition between the intersecting pavement surfaces as well as adequate drainage of the intersection. Give precedence to the grades for the dominant runway (e.g., higher speed, higher traffic volume, etc.) in a runway-runway situation and for the runway in a runway-taxiway situation.

(2) Aircraft Approach Categories C and D. The longitudinal and transverse gradient standards for runways and stopways are as follows and as illustrated in figures 5-3 and 5-4.

(a) The maximum longitudinal grade is ±1.5 percent; however, longitudinal grades may not exceed ±0.8 percent in the first and last quarter of the runway length. It is desirable to keep longitudinal grades to a minimum.

(b) The maximum allowable grade change is ±1.5 percent. Use longitudinal grade changes only when absolutely necessary.

(c) Vertical curves for longitudinal grade changes are parabolic. The length of the vertical curve is a minimum of 1,000 feet (300 m) for each 1 percent of change.

(d) The minimum allowable distance between the points of intersection of vertical curves is 1,000 feet (300 m) multiplied by the sum of the grade changes (in percent) associated with the two vertical curves.

(e) Figure 5-4 presents maximum and minimum transverse grades for runways and stopways. In all cases, keep transverse grades to a minimum, consistent with local drainage requirements.

(f) Provide a smooth transition between intersecting pavement surfaces as well as adequate drainage of the intersection. Give precedence to the grades for the dominant runway (e.g., higher speed, higher traffic volume, etc.) in a runway-runway situation and for the runway in a runway-taxiway situation.

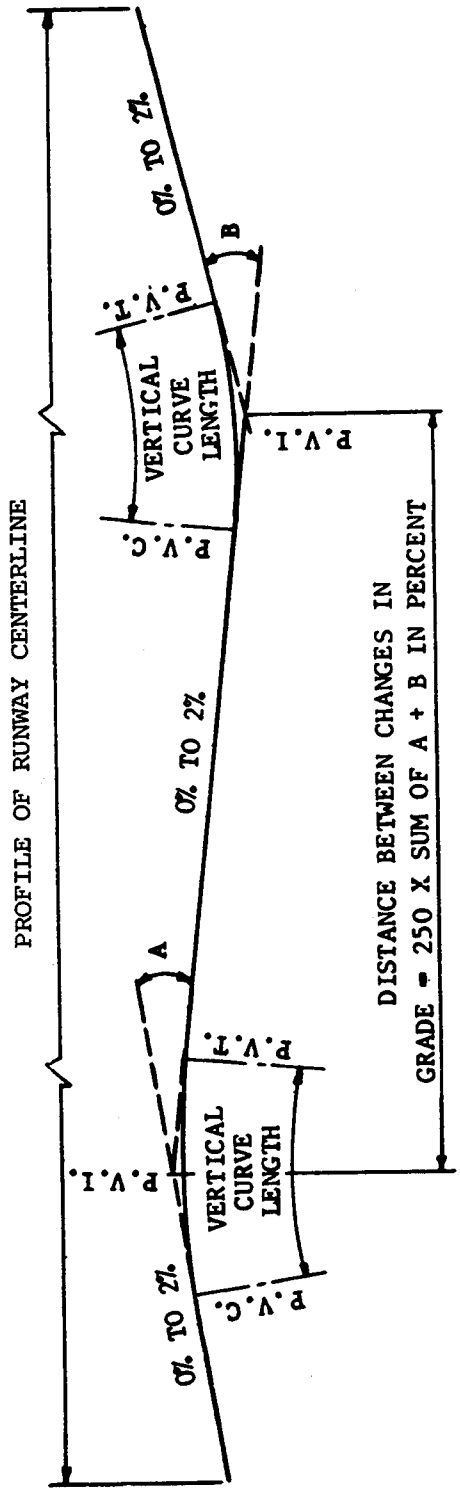

VERTICAL CURVES

LENGTH OF VERTICAL CURVES WILL NOT BE LESS THAN 300' FOR EACH 1% GRADE CHANGE, EXCEPT THAT NO VERTICAL CURVE WILL BE REQUIRED WHEN GRADE CHANGE IS LESS THAN 0.4%.

GRADE CHANGE

MAXIMUM GRADE CHANGE SUCH AS (A) OR (B) SHOULD NOT EXCEED 2%.

Figure 5-1. Longitudinal grade limitations for aircraft approach categories A & B

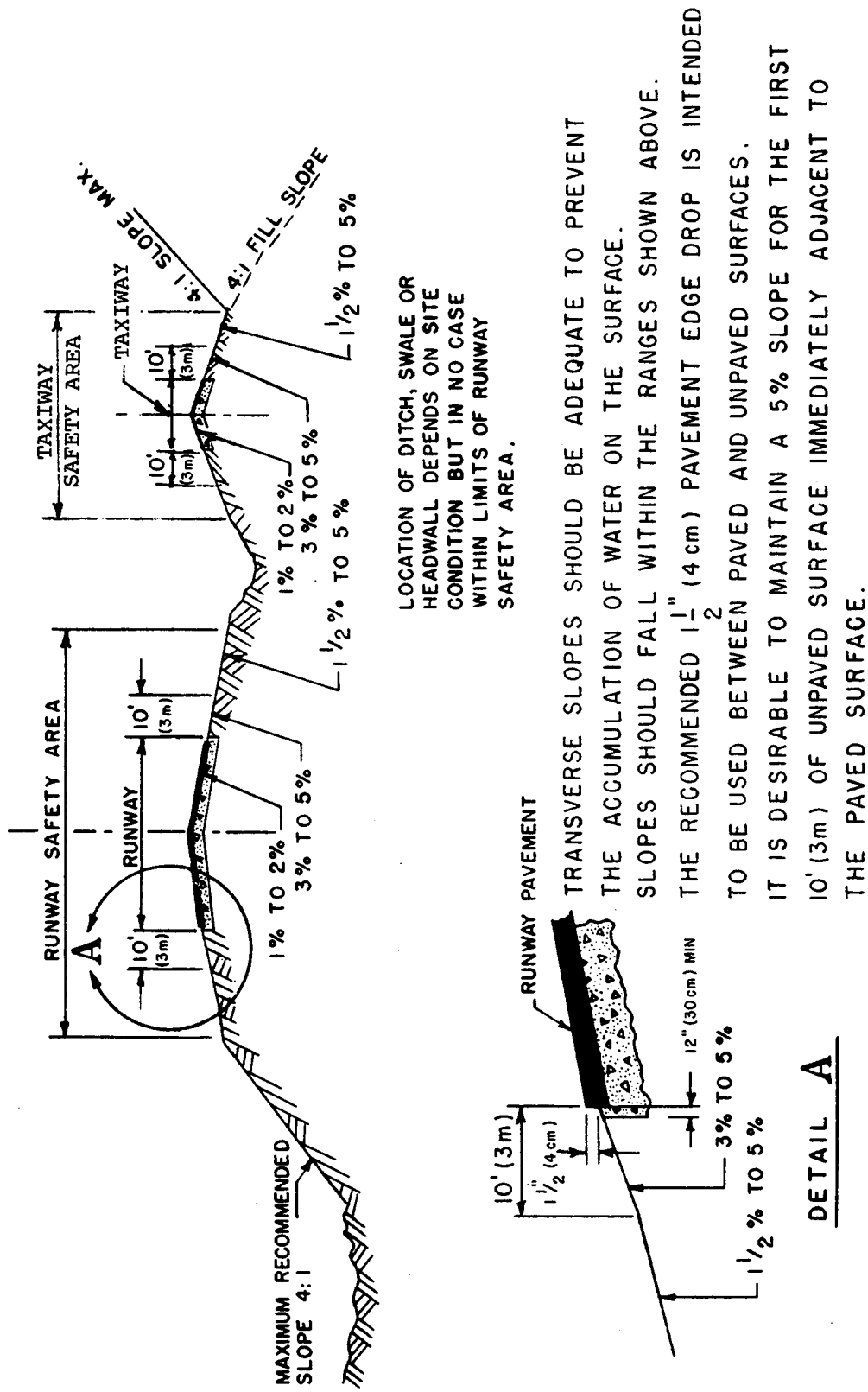

Figure 5-2. Transverse grade limitations for aircraft approach categories A & B

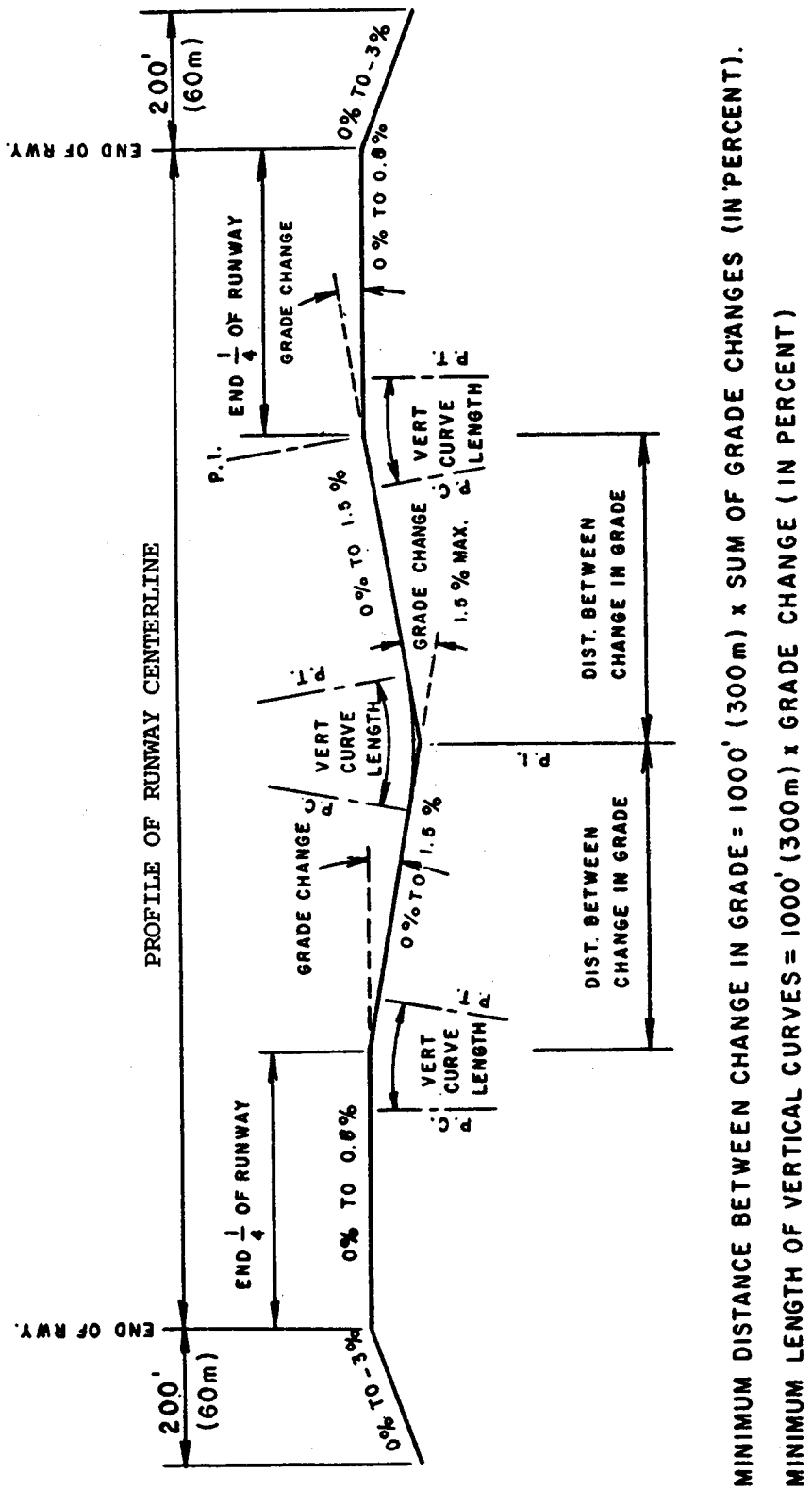

Figure 5-3. Longitudinal grade limitations for aircraft approach categories C & D

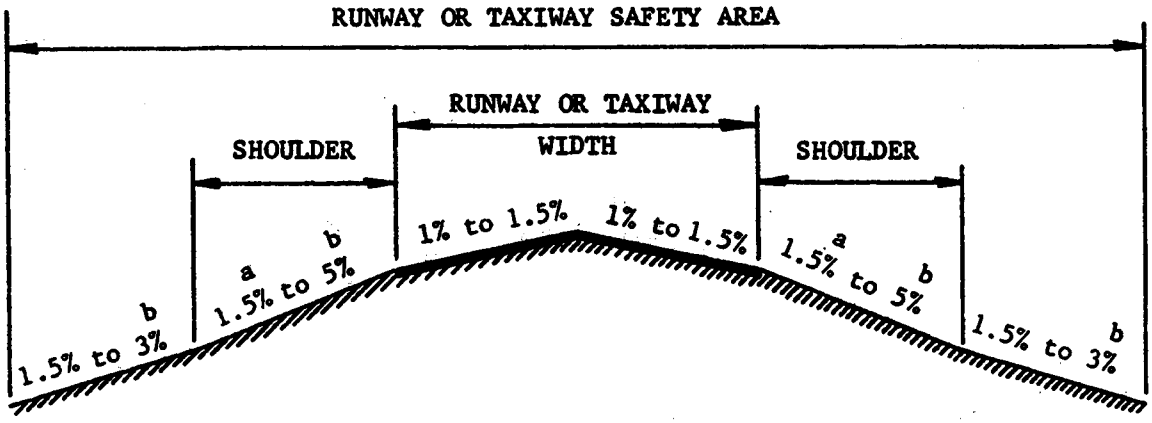

a. 3% MINIMUM REQUIRED FOR TURF

b. A slope of 5% is recommended for a 10-foot (3 m) width adjacent to the pavement edges to promote drainage.

GENERAL NOTES:

1. A 1.5 inch (3.8 cm) drop from paved to unpaved surfaces is recommended.

2. Drainage ditches may not be located within the safety area.

Figure 5-4. Transverse grade limitations for aircraft approach categories C & D

b. Runway Safety Area. The longitudinal and transverse gradient standards for runway safety areas are as follows and are illustrated in figures 5-1 through 5-5.

(1) Longitudinal grades, longitudinal grade changes, vertical curves, and distance between changes in grades for that part of the runway safety area between the runway ends are the same as the comparable standards for the runway and stopway. Exceptions are allowed when necessary because of taxiways or other runways within the area. In such cases, modify the longitudinal grades of the runway safety area by the use of smooth curves. For the first 200 feet (60 m) of the runway safety area beyond the runway ends, the longitudinal grade is between 0 and 3 percent, with any slope being downward from the ends. For the remainder of the safety area (figure 5-5), the maximum longitudinal grade is such that no part of the runway safety area penetrates the approach surface or clearway plane. The maximum allowable negative grade is 5 percent. Limitations on longitudinal grade changes are plus or minus 2 percent per 100 feet (30 m). Use parabolic vertical curves where practical.

(2) Figure 5-2 and 5-4 show the maximum and minimum transverse grades for paved shoulders and for the runway safety area along the runway up to 200 feet (60 m) beyond the runway end. In all cases, keep transverse grades to a minimum, consistent with local drainage requirements. Figure 5-5 illustrates the criteria for the transverse grade beginning 200 feet (60 m) beyond the runway end.

(3) Elevation of the concrete bases for NAVAIDs located in the runway safety area should not be higher than a maximum of 3 inches (7.6 cm) above the finished grade. Other grading requirements for NAVAIDs located in the runway safety area are, in most cases, more stringent than those stated above. See chapter 6.

c. Runway Blast Pad. For blast pads, follow the same longitudinal and transverse grades as the respective grades of the associated safety area.

d. Taxiways and Taxiway Safety Areas. Figures 5-2 and 5-4 illustrate the transverse gradient standards. The longitudinal and transverse gradient standards for taxiways and taxiway safety areas are as follows:

(1) The maximum longitudinal grade is 2 percent for Aircraft Approach Categories A and B and 1.5 percent for Aircraft Approach Categories C and D. Minimum longitudinal grades are desirable.

(2) Avoid changes in longitudinal grades unless no other reasonable alternative is available. The maximum longitudinal grade change is 3 percent.

(3) When longitudinal grade changes are necessary, the vertical curves are parabolic. The minimum length of the vertical curve is 100 feet (30 m) for each 1 percent of change.

(4) The minimum distance between points of intersection of vertical curves is 100 feet (30 m) multiplied by the sum of the grade changes (in percent) associated with the two vertical curves.

(5) At any point on a taxiway centerline, the allowable difference in elevation between the taxiway and the corresponding point on the associated parallel runway, taxiway, or apron edge is 1.5 percent of the shortest distance between the points. For the purposes of this item, a parallel taxiway is any taxiway functioning as a parallel taxiway whether it is exactly parallel or not. This will allow the subsequent placement of a stub taxiway at any point to satisfy capacity requirements.

(6) Figures 5-2 and 5-4 show the maximum and minimum transverse grades for taxiways and taxiway safety areas. In all cases, the transverse grades should be at a minimum, consistent with local drainage requirements.

(7) Elevation of the concrete bases for NAVAIDs located in the taxiway safety area should not be higher than a maximum of 3 inches (7.6 cm) above the finished grade. Other grading requirements for NAVAIDs located in the taxiway safety area are, in most cases, more stringent than those stated above. See chapter 6.

e. Aprons. To ease aircraft towing and taxiing, apron grades should be at a minimum, consistent with local drainage requirements. The maximum allowable grade in any direction is 2 percent for Aircraft Approach Categories A and B and 1 percent for Aircraft Approach Categories C and D. Where possible, design apron grades to direct drainage away from the any building, especially in fueling areas.

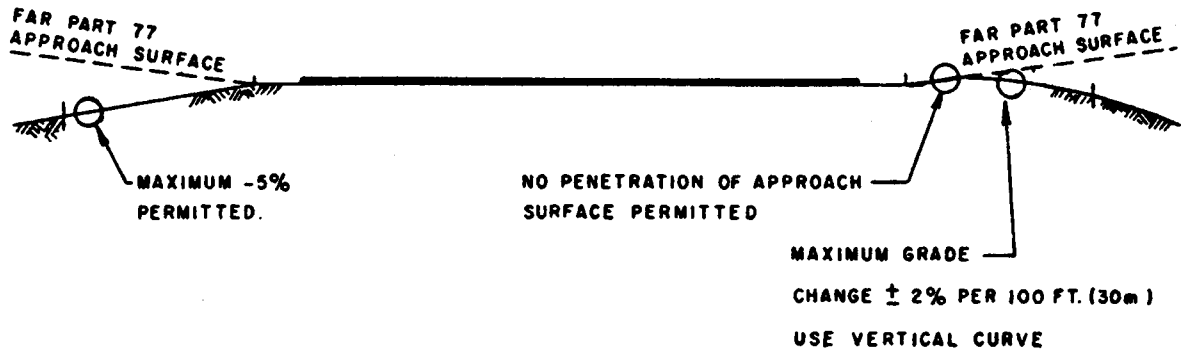

LONGITUDINAL GRADE

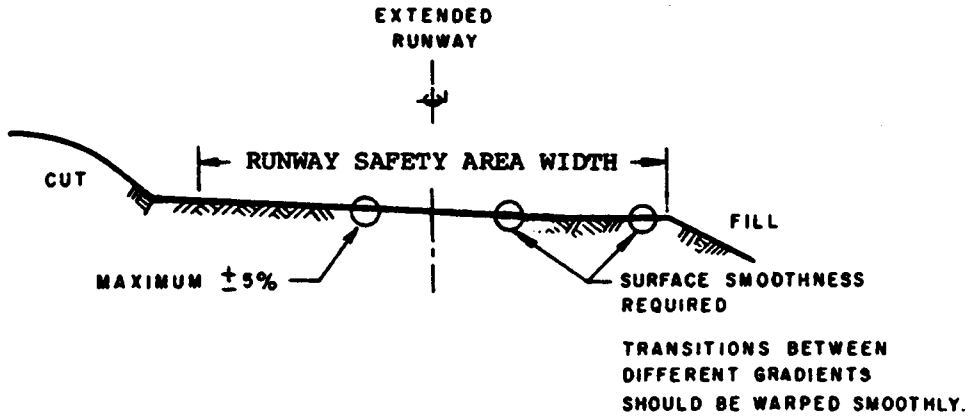

TRANSVERSE GRADE

Figure 5-5. Runway safety area grade limitations beyond 200 feet (60 m) from the runway end

503. LINE OF SIGHT STANDARDS. The following standards provide the minimum line of sight:

a. Along Individual Runways. An acceptable runway profile permits any two points five feet (1.5 m) above the runway centerline to be mutually visible for the entire runway length. However, if the runway has a full length parallel taxiway, the runway profile may be such that an unobstructed line of sight will exist from any point five feet (1.5 m) above the runway centerline to any other point five feet (1.5 m) above the runway centerline for one-half the runway length.

b. Between Intersecting Runways. A clear line of site between the ends of intersecting runways is recommended. Terrain needs to be graded and permanent objects need to be designed or sited so that there will be an unobstructed line of sight from any point five feet (1.5 m) above one runway centerline to any point five feet (1.5 m) above an intersecting centerline, within the runway visibility zone. The runway visibility zone is an area formed by imaginary lines connecting the two runways' visibility points, as shown in figure 5-6. Determine the location of each runway's visibility point as follows:

(1) If the distance from the intersection of two runway centerlines to a runway end is 750 feet (250 m) or less, the visibility point is on the centerline of the runway end.

(2) If the distance from the intersection of two runway centerlines to a runway end is greater than 750 feet (250 m) but less than 1,500 feet (500 m), the visibility point is on the centerline, 750 feet (250 m) from the intersection of the runway centerlines.

(3) If the distance from the intersection of two runway centerlines to a runway end is equal to or greater than 1,500 feet (500 m), the visibility point is on the centerline equidistant from the runway end and the intersection of the centerlines.

c. Taxiways. There are no line of sight requirements for taxiways. However, the sight distance along a runway from an intersecting taxiway needs to be sufficient to allow a taxiing aircraft to enter safely or cross the runway.

504. to 599. RESERVED.

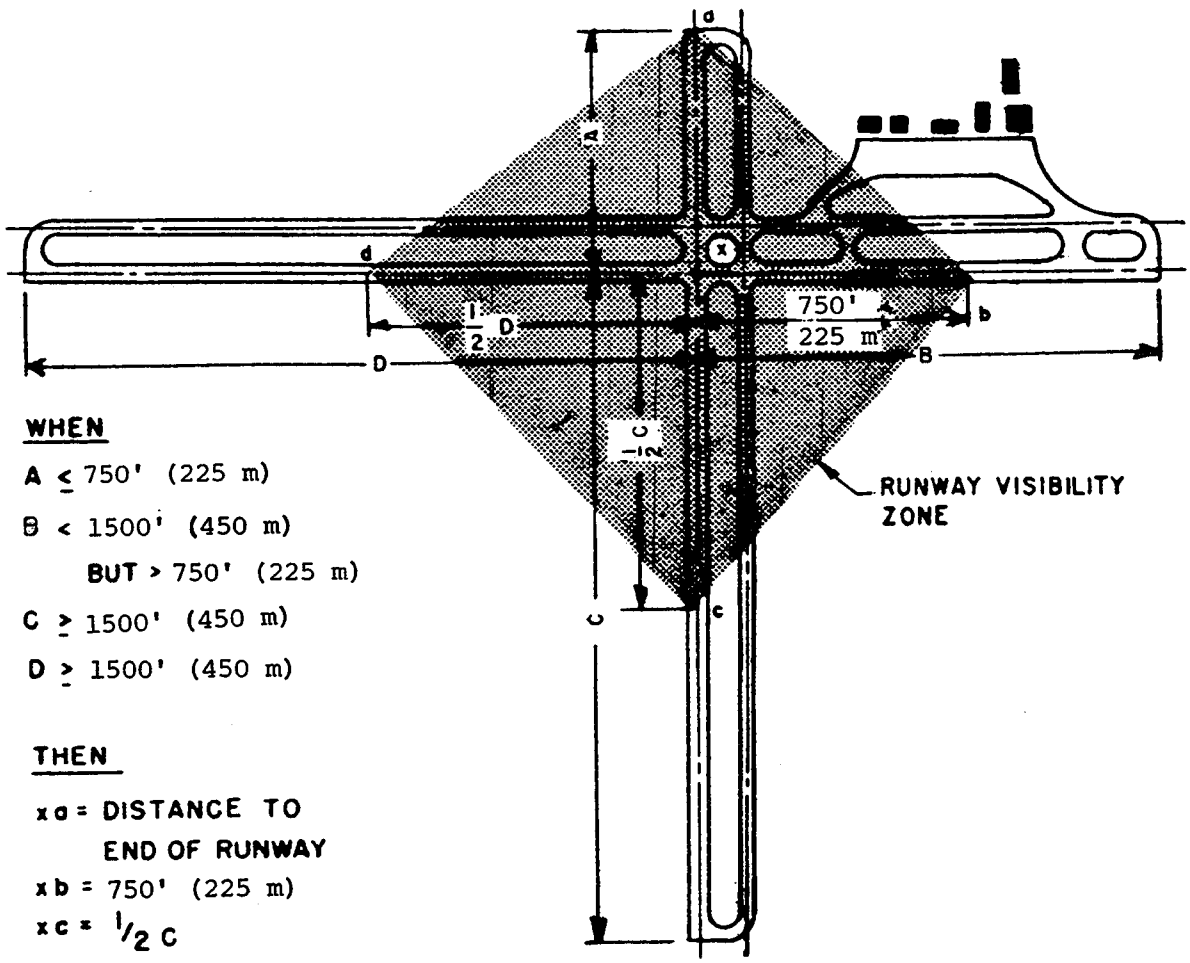

WHEN

A ≤ 750' (225 m)

B < 1500' (450 m)

BUT > 750' (225 m)

C ≥ 1500' (450 m)

D ≥ 1500' (450 m)

THEN

x a = DISTANCE TO END OF RUNWAY

x b = 750' (225 m)

x c = 1/2 C

x d = 1/2 D

Figure 5-6. Runway visibility zone

Chapter 6. SITE REQUIREMENTS FOR NAVAID AND ATC FACILITIES

600. GENERAL. This chapter presents siting and clearing requirements for the navigational aids (NAVAID) and air traffic control (ATC) facilities which influence airport planning. The information is not readily available in other FAA Advisory Circulars. It is provided to minimize conflicts between NAVAIDs and ATC facilities and other airport developments. Figure 6-2 depicts the usual location of these NAVAIDs and ATC facilities on a typical airport.

CAUTION: The guidance herein is not in sufficient detail to be used to design or install a NAVAID or ATC facility.

a. Limitations. Siting and clearing criteria is representative of the ideal situation. It is advisable to contact the appropriate FAA regional office before planning any NAVAID or ATC facility.

b. Federal NAVAID and ATC Programs. Information on eligibility for FAA-installed NAVAIDs and ATC facilities or other FAA assistance programs can be obtained from an FAA regional office. FAA policy governing NAVAID and ATC facility relocations is found in AC 6030.1, FAA Policy on Facility Relocations Occasioned by Airport Improvements or Changes.

c. Non-Federal NAVAIDs. FAA policy concerning the establishment of instrument procedures using non-Federal NAVAIDs is found in FAR Part 171, Non-Federal Navigation Facilities.

d. Jet Blast/Exhaust. NAVAIDs, monitoring devices, and equipment shelters should be located at least 300 feet (90 m) behind the source of jet blast to minimize the accumulation of exhaust deposits on antennas.

601. MICROWAVE LANDING SYSTEM. The microwave landing system (MLS) provides the pilot of a properly equipped aircraft with electronic guidance to control the aircraft's alignment and descent until the runway environment is in sight. MLS is also used to define a missed approach course or a departure course. Figure 6-2 illustrates MLS component locations.

a. General. MLS operates on the direct signal from the transmitting antenna on the ground to the receiving antenna on the aircraft.

(1) MLS is not particularly susceptible to signal interference as a result of buildings, trees, power lines, metal fences, and other large objects. However, when these objects are in the coverage area, they may cause multipath (signal reflection) or shadowing (signal blockage) problems.

(2) MLS antenna systems do not use the ground to form the desired signal. Grading for MLS installations is usually limited to that needed for the antenna and monitors, a service road, and a vehicle parking area.

b. Azimuth Antenna. Alignment guidance is provided by the azimuth (AZ) antenna. The signal coverage area extends 40 degrees either side of the intended course (runway centerline).

(1) The AZ antenna is located on the extended runway centerline at a distance of 1,000 to 1,500 feet (300 to 450 m) beyond the stop end of the runway. AZ antennas are 8 feet (2.4 m) in height and are mounted on low impact resistant supports. AZ antennas should not violate any airport design or approach surface. Figure 6-1 illustrates AZ antenna siting.

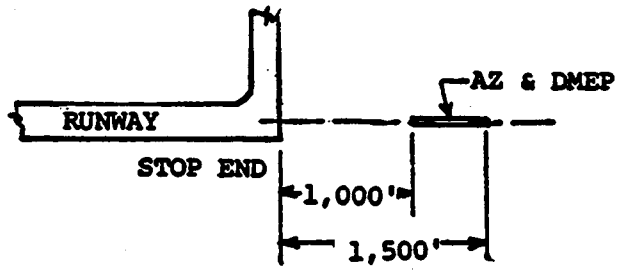

Figure 6-1. AZ antenna siting

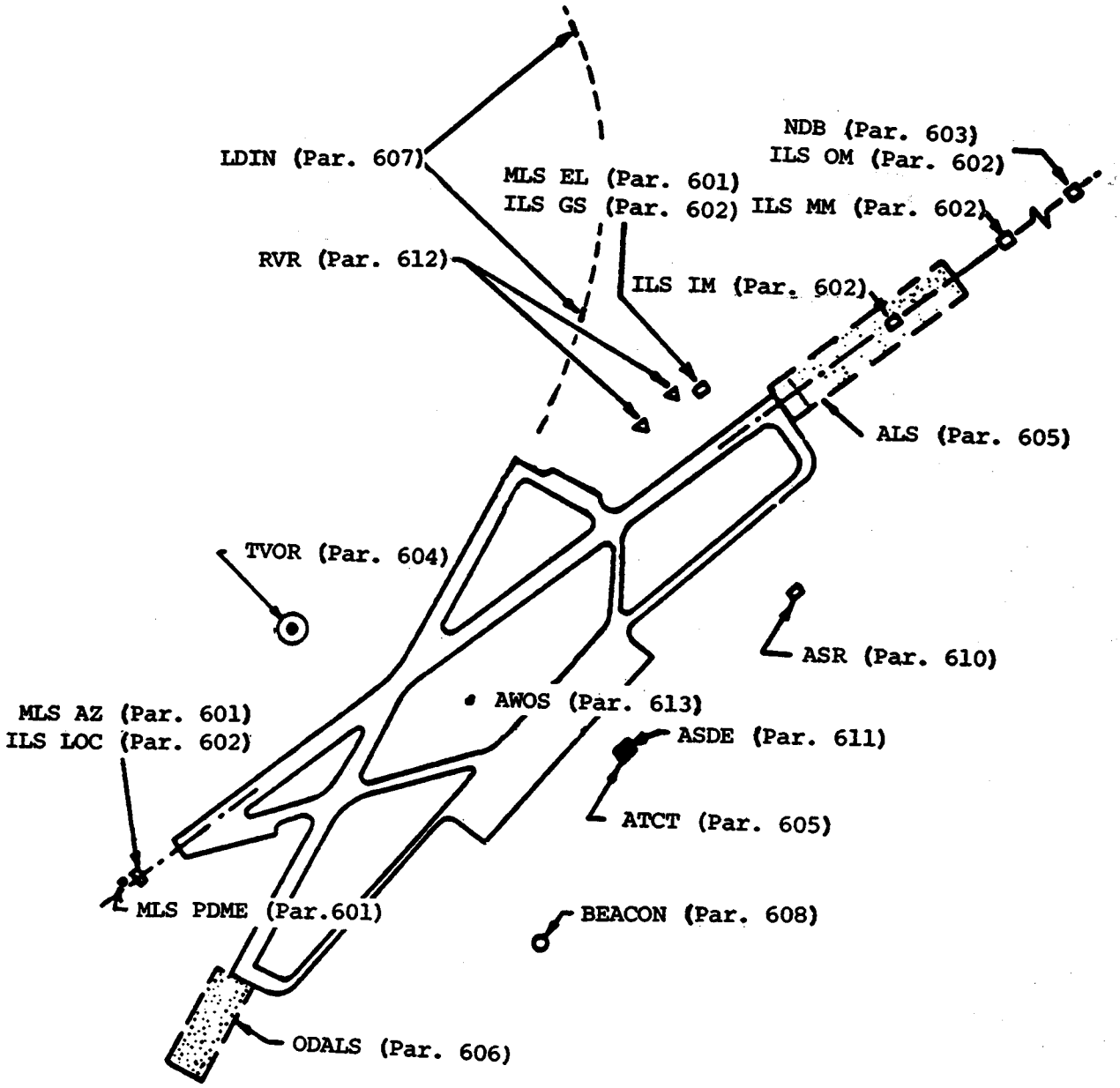

Figure 6-2. Typical NAVAID placement

(2) AZ antennas require the area between the antenna and the stop end of the runway be cleared of objects that could reflect or block the signal. Figure 6-3 illustrates this area.

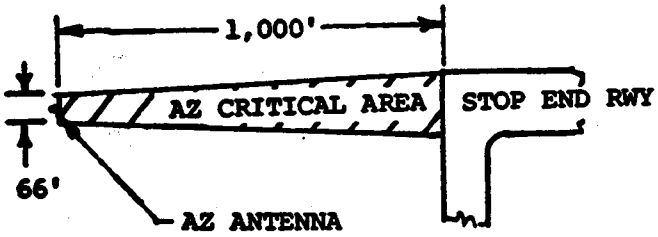

Figure 6-3. AZ antenna critical area

c. Elevation Antenna. Descent guidance is provided by the elevation (EL) antenna. The signal area extends from the horizon to 30 degrees above the horizon. The EL antenna height depends upon the beam width but would not exceed 18.6 feet (5.7 m).

(1) The EL antenna site is at least 400 feet (120 m) from the runway centerline and 800 to 1,000 feet (240 to 300 m) from the runway threshold and should provide a threshold crossing height of 50 feet (15 m). Figure 6-4 illustrates EL antenna siting.

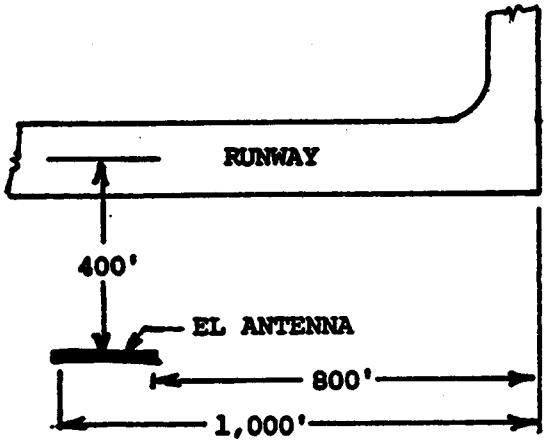

Figure 6-4. EL antenna siting

(2) EL antenna critical areas begin at the runway near edge and extend to 33 feet (10 m) outboard of the antenna site. They are 1,000 feet (300 m) in length, measured from the antenna toward the approaching aircraft. These areas should be clear of objects that could reflect or block the signal. Figure 6-5 illustrates this area.

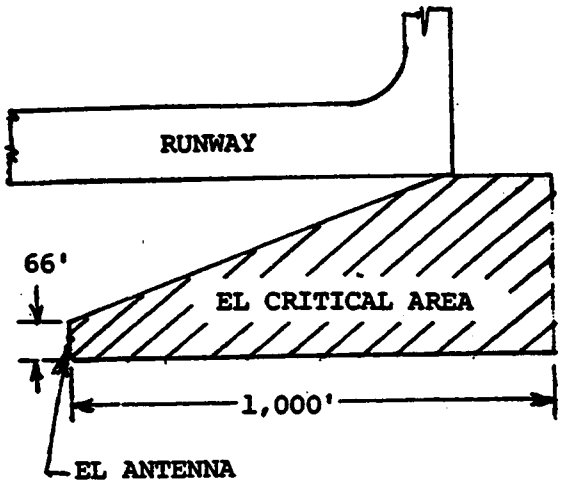

Figure 6-5. EL antenna critical area

d. Distance Measuring Equipment. Range information is provided by distance measuring equipment (DME). DME antennas are 22 feet (6.7 m) in height and normally are collocated with the AZ antenna. To preclude penetration of an approach surface, the collocated AZ/DME antennas should be placed 1,300 feet (390 m) from the runway end.

602. INSTRUMENT LANDING SYSTEM. The instrument landing system (ILS) provides pilots with electronic guidance for aircraft alignment, descent gradient, and position until visual contact confirms the runway alignment and location. Figure 6-2 illustrated ILS component locations.

a. General. The ILS uses a line-of-sight signal from the localizer antenna and marker beacons and a reflected signal from the ground plane in front of the glide slope antenna.

(1) ILS antenna systems are susceptible to signal interference sources such as power lines, fences, metal buildings, etc.

(2) Since ILS uses the ground in front of the glide slope antenna to develop the signal, this area should be graded to remove surface irregularities.

(3) ILS equipment shelters are located near but are not a physical part of the antenna installation.

b. Localizer Antenna. The localizer (LOC) signal is used to establish and maintain the aircraft's horizontal position until visual contact confirms the runway alignment and location.

(1) The LOC antenna is sited on the extended runway centerline 1,000 to 2,000 feet (300 to 600 m) beyond the stop end of the runway. The localizer critical area is illustrated in Figure 6-6.

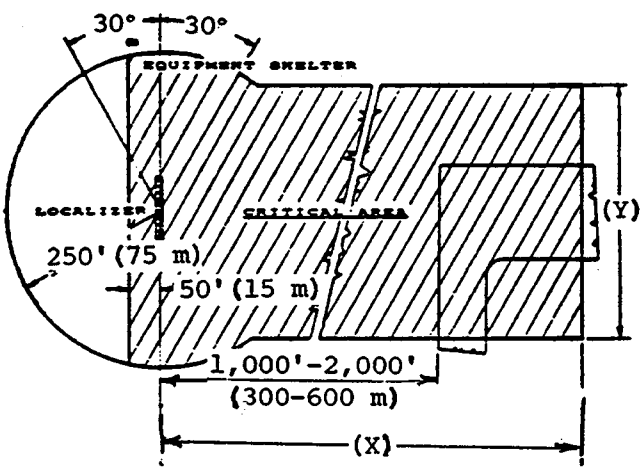

NOTE: The X and Y dimensions vary depending on the system used.

X varies from 2,000 feet (600 m) to 7,000 feet (2100 m).

Y varies from 400 feet (120 m) to 600 feet (180 m).

Figure 6-6. ILS LOC siting and critical area

(2) The critical area depicted in figure 6-6 surrounding the LOC antenna and extending toward and overlying the stop end of the runway should be clear of objects.

(3) The critical area should be smoothly graded. A constant +1 percent to -1.5 percent longitudinal grade is recommended. Transverse grades should range from +1.0 percent to -3.0 percent, with smooth transitions between grade changes. Antenna supports shall be frangible and foundations should be flush with the ground.

(4) The LOC equipment shelter is placed at least 250 feet (75 m) to either side of the antenna array and within 30 degrees of the extended longitudinal axis of the antenna array.

c. Glide Slope Antenna. The glide slope (GS) signal is used to establish and maintain the aircraft's descent rate until visual contact confirms the runway alignment and location. A GS differentiates precision from nonprecision approaches.

(1) The GS antenna may be located on either side of the runway. The most reliable operation is obtained when the GS is located on the side of the runway offering the least possibility of signal reflections from buildings, power lines, vehicles, aircraft, etc. The glide slope critical area is illustrated in Figure 6-7.

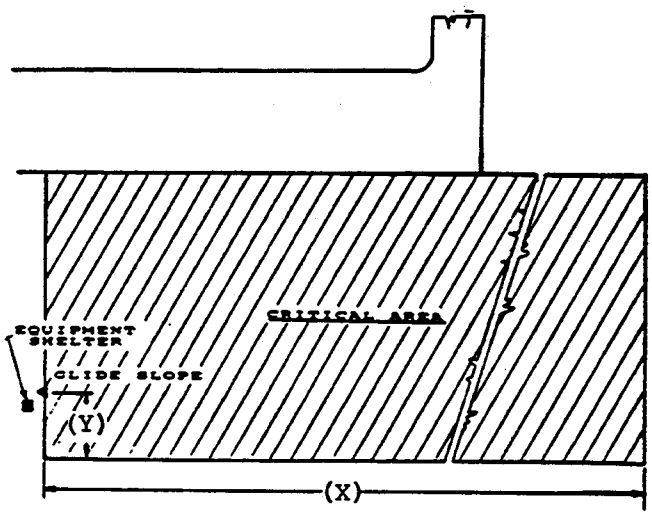

NOTE: The X and Y dimensions vary depending on the system used.

X varies from 800 feet (240 m) to 3,200 feet (960 m).

Y varies from 100 feet (30 m) to 200 feet (60 m).

Figure 6-7. GS siting and critical area

(2) Signal quality is dependent upon the type of antenna used and the extent of reasonably level ground immediately in front of the antenna.

(3) The GS equipment shelter is located 10 feet (3 m) behind the antenna and a minimum of 400 feet (120 m) from the runway centerline.

d. Marker Beacons. Marker beacons radiate cone or fan shaped signals vertically to activate aural and visual indicators in the cockpit marking specific points in the ILS approach.

(1) Marker beacons are located on the extended runway centerline at key points in the approach as noted below. Figure 6-2 illustrates the placement of marker beacons for an ILS. Figure 6-8 illustrates typical marker beacon installation.

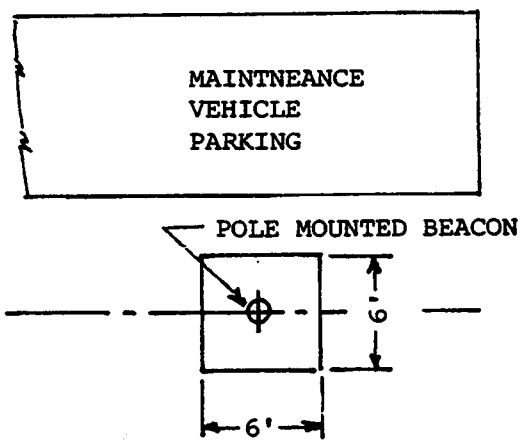

Figure 6-8. Marker beacon site

(a) The outer marker (OM) beacon is located 4 to 7 nautical miles (7.4 to 13 km) from the ILS runway threshold to mark the point at which glide slope altitude is verified or at which descent without glide slope is initiated.

(b) A middle marker (MM) beacon is located 2,000 to 6,000 feet (600 to 1 800 m) from the ILS runway threshold. It marks (approximately) the decision point of a CAT I ILS approach.

(c) An inner marker (IM) beacon may be located to mark the decision point of a CAT II or CAT III ILS approach. Inner marker beacons are not used for CAT I ILS's.

(d) A "back course" marker beacon (comparable to an outer marker beacon) may be located to the rear of a bidirectional localizer facility to permit development of a nonprecision approach.

(2) Off airport marker beacons are located in a fenced 6-foot by 6-foot (2 m by 2 m) tract situated on the extended runway centerline. Interference sources such as metal buildings, power lines, trees, etc., shall be avoided within 100 feet (30 m) of the antenna. A vehicle access and parking area is required at the site.

(3) Marker beacon sites should be smooth, level, and well drained.

603. NONDIRECTIONAL BEACON. The non-directional beacon (NDB) radiates a signal which provides directional guidance to and from the transmitting antenna. An NDB is normally mounted on a 35 foot (11 m) pole. Figure 6-9 illustrates an NDB antenna.

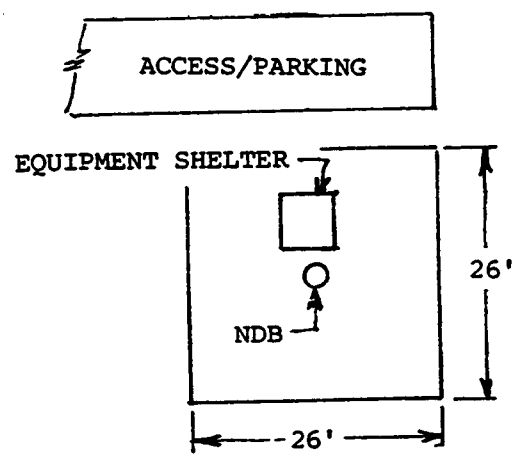

Figure 6-9. NDB site

a. Location. A NDB may be located on or adjacent to the airport. Metal buildings, power lines, or metal fences should be kept 100 feet (30 m) from a NDB antenna.

b. Grading. The NDB site should be smooth, level, and well drained.

c. Equipment Shelter. Electronic equipment is housed in a small collocated shelter.

604. VERY HIGH FREQUENCY OMNIRANGE. The standard very high frequency omnirange (VOR) located on an airport is known as a TVOR. TVORs radiate azimuth information for nonprecision instrument approach procedures. Figure 6-10 illustrates a typical TVOR installation.

a. Location. If the airport has intersecting runways, TVORs should be located adjacent to the intersection to provide approach guidance to both. TVORs should be located at least 500 feet (150 m) from the centerline of any runway and 250 feet (75 m) from the centerline of any taxiway.

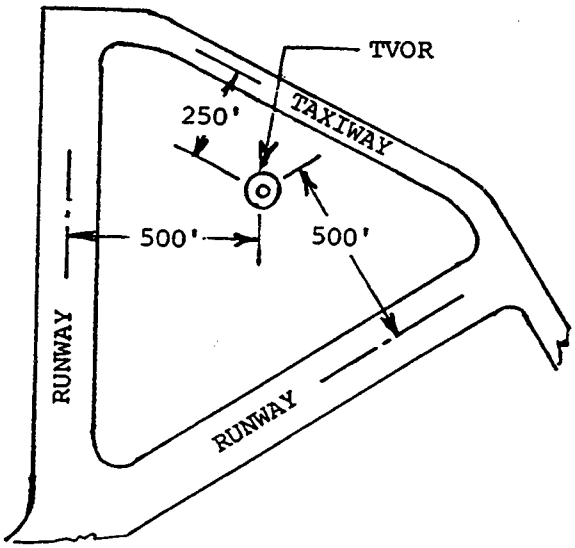

Figure 6-10. A TVOR installation

b. Clearances. TVOR signals are susceptible to distortion caused by reflections. Structures should be at least 1,000 feet (300 m) from the antenna. Metal structures beyond 1,000 feet (300 m) should not penetrate a 1.2 degree angle measured from the antenna base. Nonmetal structures beyond 1,000 feet (300 m) should not penetrate a 2.5 degree angle measured from the antenna base. Metal fences should be at least 500 feet (150 m) from the antenna and overhead power and telephone lines at least 1,200 feet (360 m) from the antenna. While trees should be at least 1,000 feet (300 m) from the antenna, a single tree may be tolerated if it is at least 500 feet (150 m) from the antenna.

c. Grading. TVOR sites should be level within 1000 feet (300 m) of the antenna. However, a downward slope of as much as 4 percent is permitted between 200 feet (60 m) and 1,000 feet (300 m) of the antenna. Surfaces should be cleared and smooth with no major irregularities.

d. Equipment Shelter. All necessary electronic equipment is located within the structure.

605. APPROACH LIGHTING SYSTEMS. All approach lighting systems (ALS) are configurations of lights positioned symmetrically along the extended runway centerline. They begin at the runway threshold and extend towards the approach. An ALS augments the electronic navigational aids. Guidance on ALS systems is found in AC 150/5340-14.

a. ALS Configurations. The FAA recognizes four ALS configurations to meet visual requirements for precision and nonprecision approaches.

(1) A ALSF-2 is a 2,400 foot (720 m) high intensity ALS with sequenced flashing lights. It is required for CAT II and CAT III precision approaches.

(2) A MALSR is a 2,400 foot (720 m) medium intensity ALS with runway alignment indicator lights (RAILs). It is an economy ALS system approved for CAT I precision approaches. The MALS portion of the system is 1,400 feet (420 m) in length. The RAIL portion extends outward an additional 1,000 feet (300 m).

(3) A MALS is a 1,400 foot (420 m) medium intensity ALS. It enhances nonprecision instrument and night visual approaches.

(4) A MALSF is a medium intensity ALS identical to the MALS above except that sequenced flashing lights are added to the outer three light bars. The sequenced flashing lights improve pilot recognition of the ALS when there are distracting lights in the airport vicinity.

b. Land Requirements. An ALS requires a site centered on the extended runway centerline. It is 400 feet (120 m) wide. It starts at the threshold and extends 200 feet (60 m) beyond the outermost light of the ALS.

c. Clearance Requirements. A clear line of sight is required between approaching aircraft and all lights in an ALS.

606. OMNIDIRECTIONAL APPROACH LIGHTING SYSTEMS. An omnidirectional approach lighting system (ODALS) may be installed on a runway with a nonprecision approach or on a runway that is difficult to identify due to an excessive number of lights in the area.

a. ODALS Configuration. ODALS consists of seven capacitor discharge lights. Five of the seven lights are sequence flashing omnidirectional lights. These five are located on the extended runway centerline, beginning 300 feet (90 m) from the runway threshold and spaced at 300-foot (90 m) intervals. The remaining two lights are located on either side of the runway threshold.

b. Land Requirements. ODALS require a site centered on the extended runway centerline. It is 400 feet (120 m) wide. It starts at the threshold and extends 1,700 feet (510 m).

c. Clearance Requirements. A clear line of sight is required between approaching aircraft and all lights in an ODALS.

607. LEAD-IN LIGHTING SYSTEMS. Lead-in lights (LDIN) consist of at least three flashing lights installed at or near ground level to define the desired course to an ALS or to a runway threshold.

a. LDIN Configuration. Each LDIN installation is unique. An LDIN is designed to overcome problems associated with hazardous terrain, obstructions, noise sensitive areas, etc. LDIN systems may be curved, straight, or a combination thereof. The lights are placed on the desired approach path, beginning at a point within visual range of the final approach. Generally the lights are spaced at 3,000-foot (900 m) intervals.

b. Land Requirements. Sufficient land or property interest to permit installation and operation of the lights, together with the right to keep the lights visible to approaching aircraft, is required.

c. Clearance Requirements. A clear line of sight is required between approaching aircraft and the next light ahead of the aircraft.

608. AIRPORT ROTATING BEACONS. Airport rotating beacons indicate the location of an airport by projecting beams of light spaced 180 degrees apart. Alternating white/green flashes identify a lighted civil airport; white/white flashes an unlighted civil airport.

a. Location. The beacon shall be located to preclude interference with pilot or controller vision. Beacons should be within 5,000 feet (1 500 m) of a runway.

b. Land Requirements. Most beacons are located on airport property. When located off the airport, sufficient land or property interest to permit installation and operation of the beacon, together with the right to keep the beacon visible to approaching aircraft, is required.

c. Clearance Requirements. A beacon should be mounted high enough above the surface so that the beam sweep, aimed 2 degrees or more above the horizon, is not blocked by any natural or manmade object.

609. AIRPORT TRAFFIC CONTROL TOWERS. From airport traffic control towers (ATCTs), ATC personnel control flight operations within the airport's designated airspace and the operation of aircraft and vehicles on the movement area. A site should be reserved for an ATCT after consulting with the appropriate FAA regional office.

a. Land Requirements. A typical ATCT site will range from 1 to 4 acres (0.4 to 1.6 hectares). Additional land may be needed for combined flight service stations/towers.

b. Clearance Requirements. ATCT sites must meet these requirements:

(1) There must be maximum visibility of the airport's traffic patterns.

(2) There must be a clear, unobstructed, and direct line of sight to the approaches, to all runways or landing areas, and to all runway and taxiway surfaces.

(3) Most ATCTs penetrate an FAR Part 77 surface. A tower pentrating an FAR Part 77 surface is an obstruction to air navigation. As such, it is presumed to be a hazard to air navigation until an FAA study determines otherwise.

(4) The ATCT must not derogate the signal generated by any existing or planned electronic NAVAID or an ATC facility.

(5) The proposed site must be large enough to accommodate current and future building needs, including employee parking spaces.

610. AIRPORT SURVEILLANCE RADAR. Airport surveillance radars (ASR) are used to control air traffic. ASR antennas scan through 360 degrees to present the controller with the location of all aircraft within 60 nautical miles of the airport. The site for the ASR antenna is flexible, subject to the following guidelines:

a. Location. The ASR antenna should be located as close to the ATCT control room as practical. ASR-4, -5, -6, and -7 antennas should be within 12,000 feet (3 600 m) of the control room. ASR-8 antennas should be within 20,000 feet (6 000 m) of the control room. ASR-9 antennas may be located over 20,000 feet (6 000 m) from the control room.

b. Clearances. Antennas should be located at least 1,500 feet (450 m) from any building or object that might cause signal reflections and at least one-half mile (.8 km) from other electronic equipment. ASR antennas may be elevated to obtain line-of-sight clearance. Typical ASRs heights range from 25 to 85 feet (7.5 to 25.5 m) above ground.

611. AIRPORT SURFACE DETECTION EQUIPMENT. Airport surface detection equipment (ASDE) compensates for the loss of line of sight to surface traffic during periods of reduced visibility. ASDE should be sited to provide line-of-sight coverage of the entire aircraft movement area. While the ideal location for the ASDE antenna is on the ATCT cab roof, the antenna may be placed on a freestanding tower up to 100 feet (30 m) tall located within 6,000 feet (1 800 m) of the ATCT cab.

612. RUNWAY VISUAL RANGE FACILITIES. Runway visual range facilities provided a measurement of horizontal visibility, i.e., how far ahead the pilot of an aircraft should be able to see high intensity runway edge lights or contrasting objects. RVR installations consist of a projector and a receiver. Existing systems will be replaced by single-point systems in the 1990-1998 time frame.

a. Number. The number of RVRs required depends upon the runway approach category and physical length.

(1) CAT I runways require only a touchdown RVR.

(2) CAT II runways with authorized visibility minimums down to 1,600 RVR require only a touchdown RVR. Minimums below 1,600 RVR require touchdown and rollout RVRs. CAT II runways more than 8,000 feet (2 400 m) in length require touchdown, roll-out, and midpoint RVRs.

(3) CAT III runways with visibility minimums below 1,200 RVR require touchdown, midpoint, and rollout RVRs.

b. Longitudinal Location.

(1) Touchdown RVRs are located 750 to 1,000 feet (225 to 300 m) from the runway threshold, normally behind the MLS elevation antenna or ILS glide slope antenna.

(2) Rollout RVRs are located 750 to 1,000 feet (225 to 300 m) from the rollout end of the runway.

(3) Mid-point RVRs are located within 250 feet (75 m) of the runway's center longitudinally.

c. Lateral Location. RVR installations are located adjacent to the instrument runway.

(1) Single-point visibility sensor installations are located at least 400 feet (120 m) from the runway centerline and 150 feet (45 m) from a taxiway centerline.

(2) Transmissometer projectors are located at least 400 feet (120 m) from the runway centerline and 150 feet (45 m) from a taxiway centerline. Receivers are located between 250 feet (75 m) and 1,000 feet (300 m) from the runway centerline. The light beam between the projector and receiver should be at an angle of 5 to 14.5 degrees to the runway centerline. The light beam may be parallel to the runway centerlines when installations are between parallel runways.

613. AUTOMATIC WEATHER OBSERVATION STATIONS (AWOS). Automatic recording instruments have been developed for measuring cloud height, visibility, wind speed and direction, temperature, dewpoint, etc.. The U.S. Department of Commerce's National Oceanic and Atmospheric Administration publication "Federal Standard for Siting Meteorological Sensors at Airports" addresses siting of sensors. AC 150/5220-16, Automated Weather Observing Systems (AWOS) for Non-Federal Applications provides additional guidance.

614. PHYSICAL SECURITY. Airport facilities require protection from acts of vandalism. To provide a measure of protection, unauthorized persons must be precluded from having access to NAVAIDs and ATC facilities. Perimeter fencing should be installed to preclude inadvertent entry of people or animals onto the airport. In addition to airport perimeter fencing, the following security measures are recommended:

a. Off-Airport Facilities. Navigational and ATC facilities located off an airport, and in a location that is accessible to animals or the public, shall have a security perimeter fence installed at the time of construction.

b. On-Airport Facilities. Navigational and ATC facilities located on the airport have at least the protection of the operational areas. Any protection device, e.g., a guard rail or security fence, which penetrates an FAR Part 77 surface is an obstruction to air navigation. As such, it is presumed to be a hazard to air navigation until an FAA study determines otherwise.

615. CABLE PROTECTION. Most NAVAID and ATC facilities discussed in this chapter are served by buried power and control cables. FAA cables are typically buried approximately 24 inches (.6 m) below ground. They should be installed in conduit or duct beneath runways and taxiways, and in duct and manhole systems under aprons and paved parking areas. Information regarding the location of FAA cables and ducts may be obtained from the Manager of the Airways Facilities Maintenance Office serving the NAVAID or ATC facility. Questions relative to protecting or relocating cables can be obtained from the FAA Regional Airways Facilities Division Office.

616. to 699. RESERVED

Chapter 7. RUNWAY AND TAXIWAY BRIDGES

700. INTRODUCTION. Efforts to extend a runway are in many cases complicated by an existing or proposed street, highway, or railroad which is important to the community. When the closing or rerouting of an existing surface transportation mode is not practical, consider bridging the runway/taxiway over the impediment. This chapter presents guidance for this consideration.

701. SITING PRECEPTS. Minimize the extent of the required structure(s) by selection of:

a. Route. Achievement of the least number of required runway or taxiway bridges is possible through routing or rerouting of surface modes.

b. Alignment. A single bridge structure should handle all surface modes, including utilities, through proper routing or alignment.

c. Locations. Locations of bridges should be on straight portions of taxiways and away from taxiway intersections or angled taxiway exits. Such airport features as drainage systems, utility service lines, runway and taxiway lighting circuits, ILSs, and approach lighting systems (ALS), may also affect bridge location and design.

702. DIMENSIONS.

a. Length. Bridge length is parallel with the runway or taxiway centerline.

b. Width. Bridge width is perpendicular to the runway or taxiway centerline. The recommended bridge width (full strength structure) is the width of the runway or taxiway plus safety areas. It is recommended that bridges for a runway and parallel taxiway be continuous full-width, full-strength structures as illustrated in figures 7-1 and 7-2. In unusual situations, site conditions may limit taxiway bridges to a width of the taxiway plus shoulders. A minimum width taxiway bridge requires: positive edge protection; underwing engine clearance; adequate blast protection for vehicles or personnel crossing under the bridge; sufficient width for maneuvering rescue and firefighting equipment; and sufficient width to accommodate aircraft evacuation slides. Figure 7-3 illustrates a minimum width taxiway bridge.

c. Height. Bridge height is the vertical clearance provided over the crossed surface.

d. Clearance. Except for positive edge restraints on minimum width taxiway bridges, no structural members should project above the runway or taxiway surface.

703. LOAD CONSIDERATIONS. Runway and taxiway bridges must support both static and dynamic loads imposed by the heaviest airplane expected to use the structures. Airport authorities should evaluate the potential need to accommodate heavier airplanes and construct any runway or taxiway bridge accordingly. Overdesign is preferable to the cost and operational penalties of replacing or strengthening an underdesigned structure at a later date. Airplanes weighing up to 873,000 pounds (395 985 kg) are in use today. Airplanes weighing 1,000,000 pounds (453 600 kg) or more may exist by the turn of the century.

704. DECK DESIGN. Bridges should be designed to incorporate a layer of select earth between the bridge deck and the runway or taxiway pavement. The earth acts as an insulator to reduce the probability of ice forming on the bridge before the adjacent pavement freezes. Where bridge height is limited, the bridge's structural deck may be the runway or taxiway surface.

705. MARKING AND LIGHTING. The following marking and lighting is in addition to the standard marking and lighting specified in advisory circulars of the 150/5340 series. Figure 7-5 illustrates shoulder marking for minimum width taxiways.

a. Three equally-spaced L-810 obstruction lights on each side of the bridge.

b. Chevrons spaced 25 feet (7.5 m) apart on runway and taxiway shoulders.

c. Taxiway centerline lights or centerline reflectors.

d. Taxiway edge lights or edge reflectors.

e. Taxiway edge markings.

706. OTHER CONSIDERATIONS. The preceding paragraphs cover design requirements applicable to all runway and taxiway bridges. The following identify additional design features which may be necessary as part of a specific runway or taxiway bridge project.

a. Curbs. On minimum width taxiway bridges and where icing conditions may exist, a curb designed to hold the largest expected aircraft should be added to prevent aircraft from being blown from the bridges. Figure 7-3 shows a double-curb installation.

b. Security Fences. Security fences should be provided adjacent to the bridge-tunnel to prevent inadvertent entry of persons, vehicles, or animals into operational areas. AC 107-1 furnishes additional guidance on the subject.

c. Pavement Heating. Where freezing is a problem, in-pavement heating may be desirable on bridges which do not have sufficient earth cover to provide insulation. Accordingly, the drainage system needs to be capable of accepting melted runoff without refreezing or flooding the bridged surface.

d. Service Roads. Airport maintenance and service equipment may use a runway or taxiway bridge if its presence does not interfere with airplane operations. There should be a separate bridge if there is more than occasional use by these vehicles. Figure 7-6 illustrates a multi-use bridge over a public roadway.

e. Blast Protection. Minimum width taxiway bridges require special features to protect the surface mode from jet blast. One alternative is nonload-bearing decks beyond the limits of the load-bearing shoulders.

f. Approach Aprons. Aprons, similar to those used in highway construction, are recommended to minimize the effects of differential settlement between the bridge proper and its approaches.

g. Tunnel Ventilation. The need for mechanical ventilation will depend upon its length. When mechanical ventilation is necessary, all aboveground components need to be located so that they are not a hazard to aeronautical operations.

h. Tunnel Lighting. The need for artificial lighting of the tunnel depends on its length. Emergency lighting and lane-control signals may also be necessary. The American Association of State Highway Officials publication "Informational Guide for Roadway Lighting" contains a section on lighting tunnels and underpasses. Copies of this publication are available through state highway offices. Light poles shall not penetrate an FAR Part 77 surface unless an FAA aeronautical study determines they will not be hazards. Light from the fixtures shall not cause glare or distract pilots or control tower personnel. Figure 7-4 illustrate roadway lighting applications.

i. Drainage. Tunnels which pass under a runway or taxiway, may require automatic, self-priming pumps.

707. PASSENGER AND BAGGAGE TUNNELS. Passenger and baggage tunnels connect main and satellite terminals. In essence, they are merely smaller versions of runway and taxiway bridges and have similar design considerations. Tunnels house walkways, baggage conveyers, subway-type people-mover systems, or a combination of these.

708. to 799. RESERVED.

Figure 7-1. Full width runway-taxiway bridge

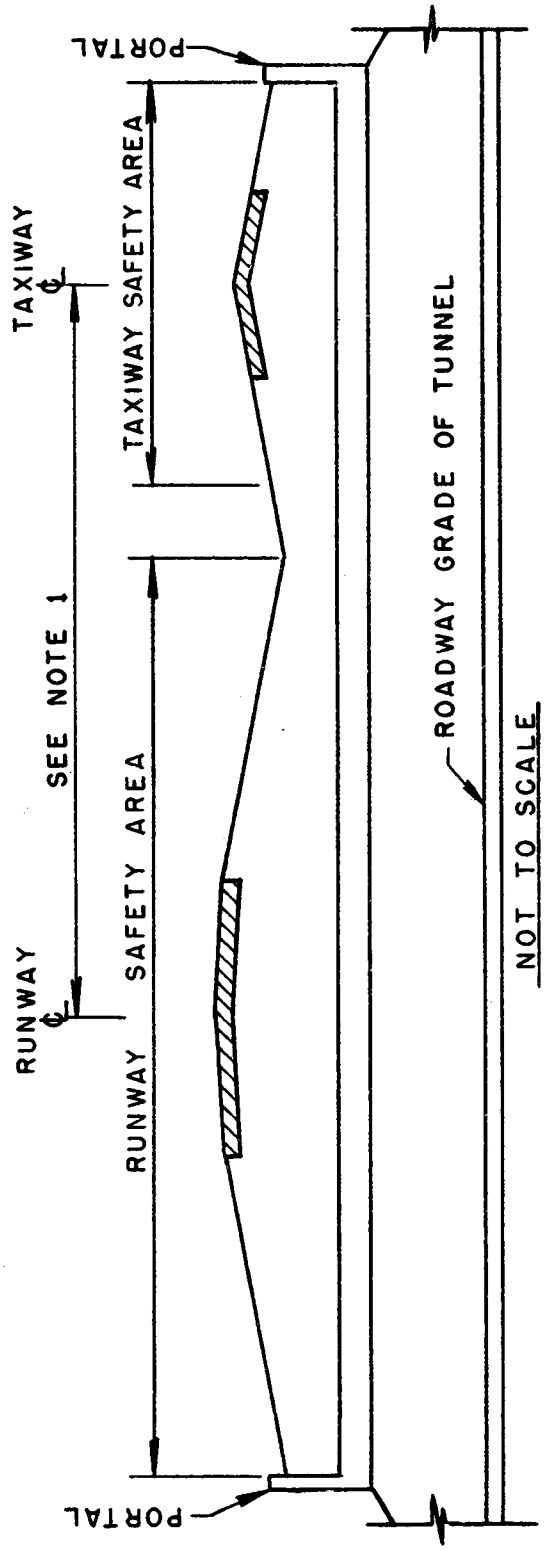

NOTES:

1. WIDTH OF TAXIWAY SAFETY AREA AND RUNWAY / TAXIWAY SEPARATION DISTANCE VARY DEPENDING ON AIRPLANE / TAXIWAY DESIGN GROUP.
2. ROADWAY TUNNEL NORMALLY HAS SLIGHT LONGITUDINAL GRADIENT AND SOME TYPE OF RETAINING WALL AT PORTALS
3. UNIFORM TUNNEL CROSS SECTION IS NORMALLY USED; AND A CONTINUOUS STRUCTURE WITHOUT OPEN SECTION IN INFIELD AREA IS PREFERRED AND RECOMMENDED WHEREVER FEASIBLE

Figure 7-2. Cross-section full width runway-taxiway bridge

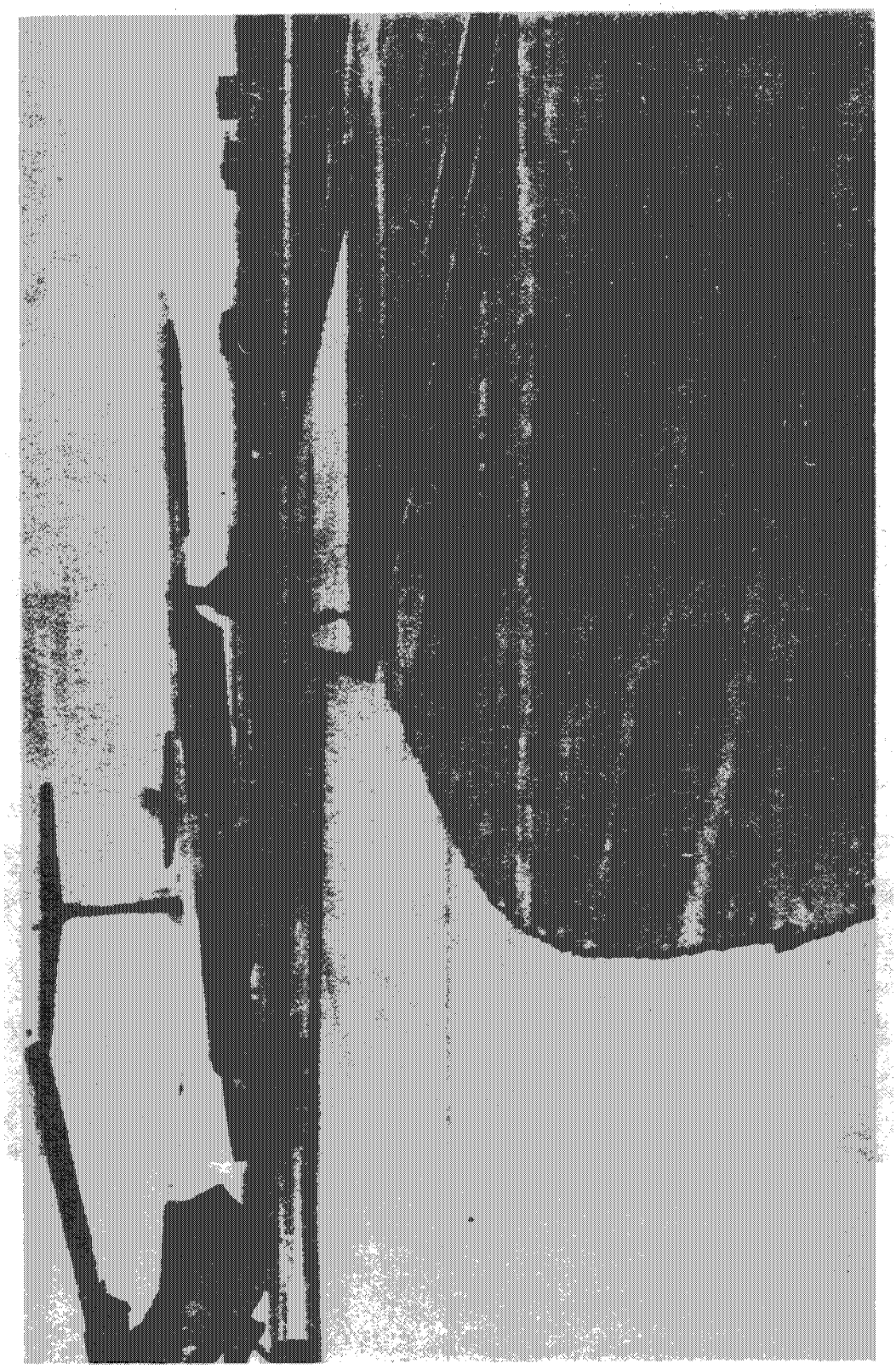

Figure 7-3. Minimum width taxiway bridge with positive edge protection, O'Hare Airport, Chicago, IL

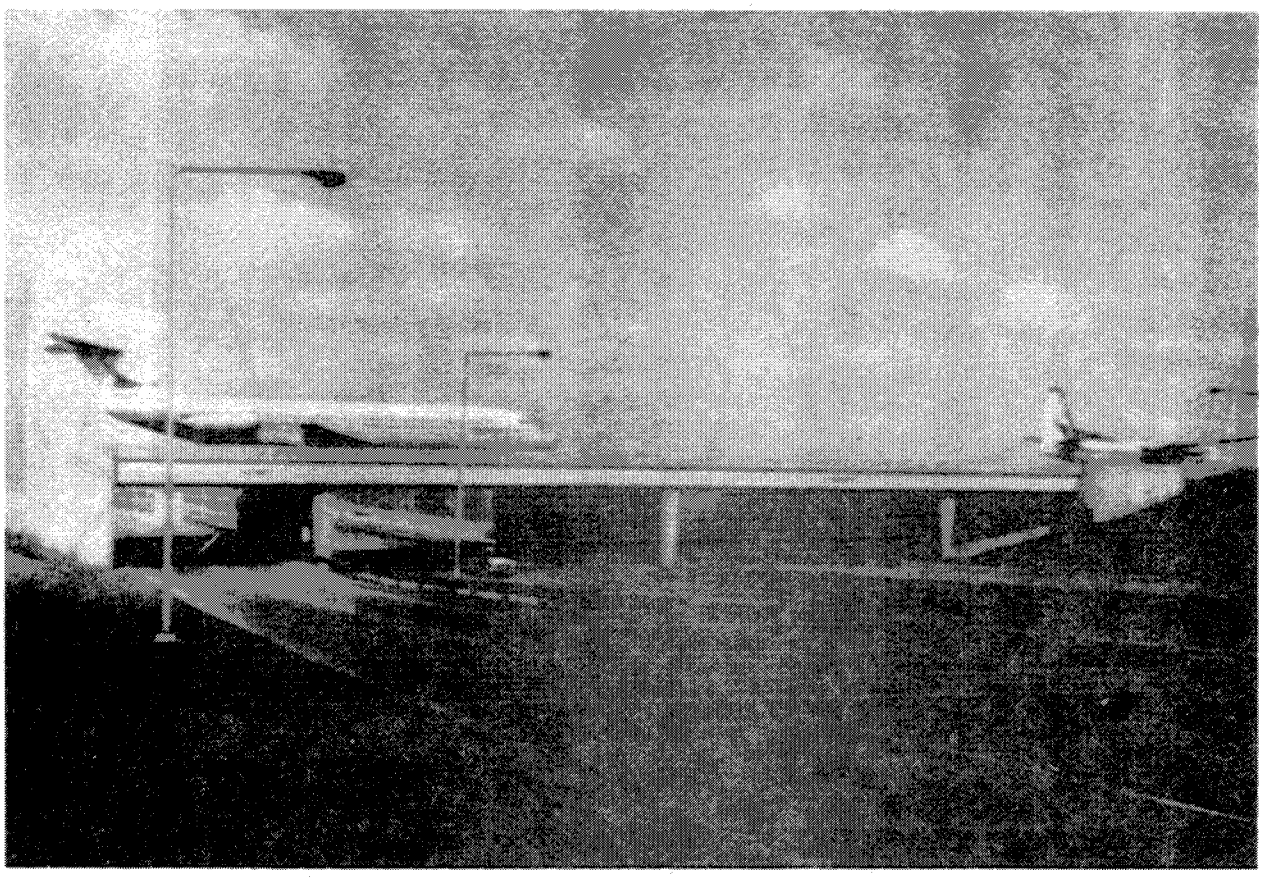

Figure 7-4. Example structural deck and depressed roadway, O'Hare Airport, Chicago, IL

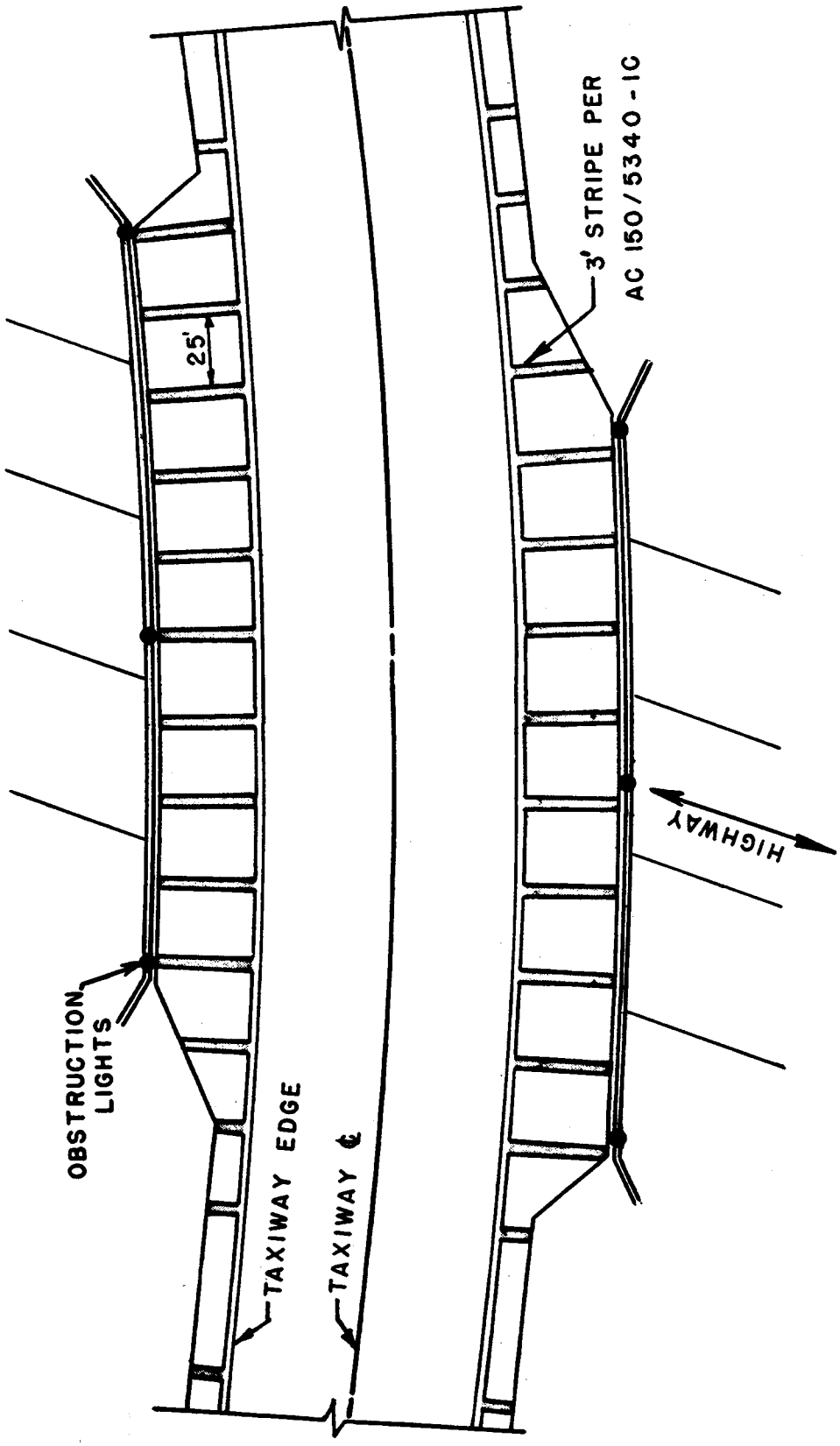

Figure 7-5. Suggested shoulder marking of minimum width taxiway bridge

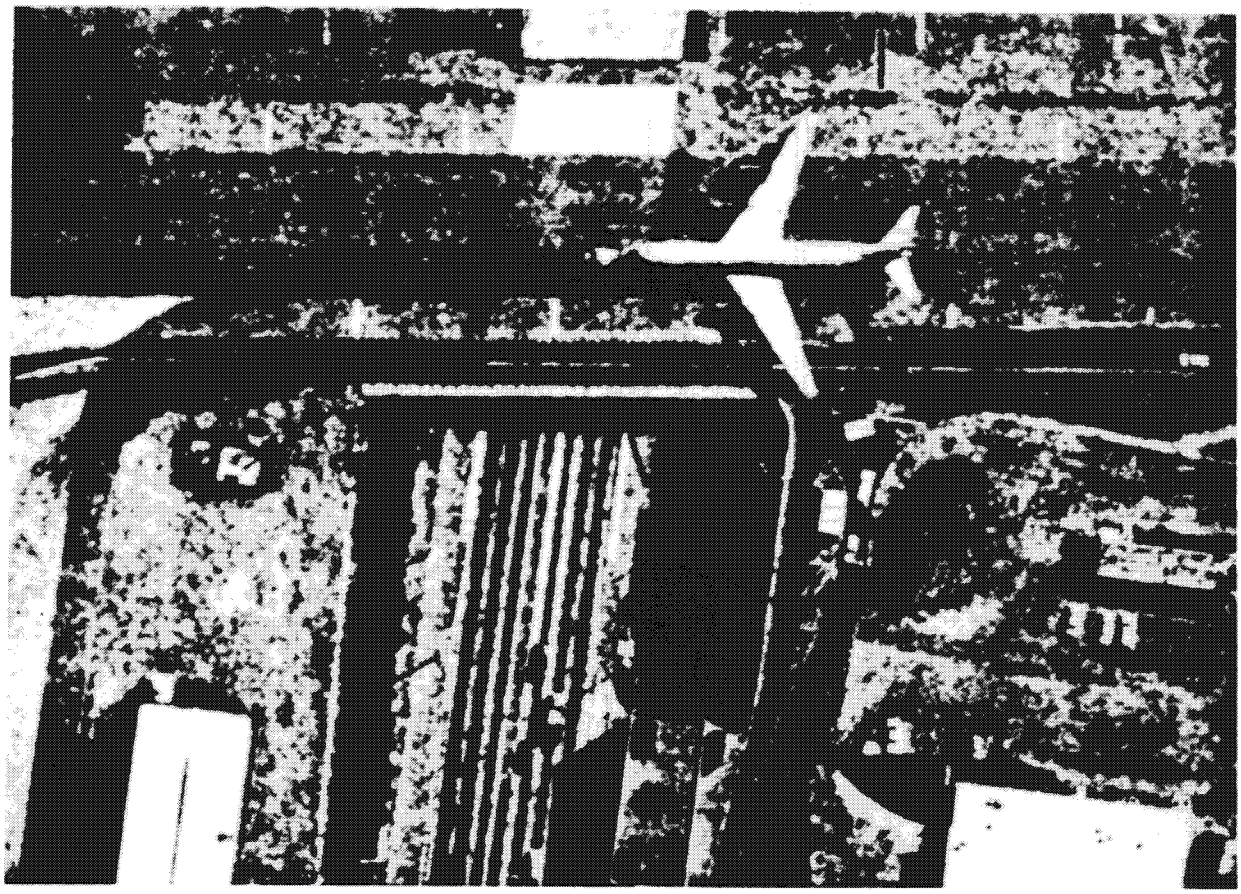

Figure 7-6. Controlled use service road, Los Angeles International Airport, Los Angeles, CA

Chapter 8. THE EFFECTS AND TREATMENT OF JET BLAST

800. INTRODUCTION. The forces of jet exhaust (jet blast) far exceed the forces of propwash from the most powerful propeller airplane. These high velocities are capable of causing bodily injury to personnel and damage to airport equipment or facilities. This chapter suggests means to minimize the effects of jet blast.

801. JET BLAST EFFECTS. Jet blast affects all operational areas of the airport. In terminal, maintenance, and cargo areas, personnel safety is the overriding consideration. Blast velocities greater than 30 m.p.h. (48 km/hr) can cause loose objects on the pavement to become missiles capable of causing injury to personnel who may be at a considerable distance behind the airplane. In other operational areas, sudden gusts averaging more than 20 m.p.h. (31 km/hr) are hazardous, and when striking moving vehicles or airplanes, are more dangerous than continuous velocities of the same magnitude. Velocities of this magnitude can occur over 2,000 feet (600 m) to the rear of certain airplanes when their engines are operating at takeoff thrust.

a. Jet Blast Pressures. Jet exhaust velocities are irregular and turbulent. The vibrations they induce over small areas should be considerations in designing a building or structure subjected to jet blast. Over areas of 10 to 15 square feet (3 to 5 m^2), the velocities may be assumed to be periodic with peaks occurring 2 to 6 times per second. These peaks are not continuous laterally or vertically. The following equation computes the pressure produced on a surface perpendicular to the exhaust stream:

$P = 0.00256\ V^2$, where:
P = pressure in pounds per square foot; and
V = velocity in miles per hour.

$P = 0.04733\ V^2$, where:
P = pressure in pascals; and
V = velocity in kilometers per hour.

b. Blast Velocity Distances. The drag and uplift forces produced by jet engines are capable of moving large boulders. A jet engine operating at maximum thrust is capable of lifting a 2-foot (0.6 m) boulder 35 feet (10 m) behind the airplane completely off the ground. Fortunately, these forces which cause severe erosion decrease rapidly with distance so that beyond 1,200 feet (365 m) behind a jet airplane only sand and cohesionless soils are affected. Figures 8-1 through 8-5 illustrate the velocity versus distance plots for representative airplanes. The velocities shown represent maximum values, particularly for breakaway from a parked position. For site specific conditions, include manufacturers' jet blast data for the most demanding airplane in the analysis. The distances shown are measured from the rear of the airplane and the velocities are for takeoff, breakaway, and idle thrust power settings. Similar data for other airplanes, including lateral and vertical velocity contours, as well as site specific blast loads on structures, may be obtained from the engine manufacturers.

c. Heat Effects. High temperatures are also associated with jet exhaust; but the affected area is smaller than the area subject to hazardous jet blast velocities. Contours showing the level of heat at varying distances from jet engines are obtainable from airplane manufacturers.

802. BLAST FENCES. Properly designed blast fences can substantially reduce or eliminate the damaging effects of jet blast, as well as the related fumes and noise which accompany jet engine operation. Fences are permissible near apron areas to protect personnel, equipment, or facilities from the jet blast of airplanes moving into or out of parking positions. In addition, blast fences may be necessary near runway ends, run-up pads, etc., to shield off-airport, as well as, airport pedestrian or vehicular traffic.

a. Location. Generally, the closer the fence is to the source of blast, the better it performs, provided that the centerline of the exhaust stream falls below the top of the fence. To the extent practicable, blast fences should be located outside of the runway object free area.

b. Design. Figures 8-6 and 8-7 illustrate several types of blast fence design which are readily available from various manufacturers. Blast fences located inside the runway object free area should be as frangible as practicable.

c. Other Types of Blast Protection. Although blast fences are the most effective means of blast protection, other methods may achieve satisfactory results. Any surface, whether natural or manmade, located between the jet engine and the area to be protected will afford some measure of blast protection.

803. SHOULDERS AND BLAST PADS. Unprotected soils adjacent to runways and taxiways are susceptible to erosion. A dense, well-rooted turf cover can prevent erosion and support the occasional passage of aircraft, maintenance equipment, or emergency equipment under dry conditions. Paved shoulders are recommended for runways, taxiways, and aprons which will accommodate Group III and higher aircraft. Turf, aggregate-turf, soil cement, lime or bituminous stabilized soil are recommended adjacent to paved surfaces provided for Group I and II aircraft.

a. Shoulder and Blast Pad Dimensions. Paved shoulders should run the full length of the runway(s) and taxiway(s). Blast pads at runway ends should extend across the full width of the runway plus the shoulders. Table 3-1, 3-2, and 3-3 specify the standard blast pad dimensions and runway shoulder widths. Table 4-1 specifies the standard taxiway shoulder widths. Increases to these standard dimensions are permissible for unusual local conditions.

b. Pavement Strength. Shoulder and blast pad pavement needs to support the occasional passage of the most demanding airplane as well as the heaviest existing or future emergency or maintenance vehicle for the design life of the full strength pavement. These pavements may be constructed of bituminous or Portland Cement concrete materials. Specifications for materials and constructions standards for these pavements should be based on state highway requirements.

(1) For Airplane Design Groups III and IV, the minimum bituminous concrete surface thickness, constructed on an aggregate base, is 2 inches (51 mm) for shoulders and 3 inches (76 mm) for blast pads. These thicknesses should be increased by 1 inch (25 mm) for Airplane Design Groups V and VI. Aggregate base and subbase thicknesses should be determined using state highway design standards.

(2) The thickness of shoulders and blast pads constructed of Portland Cement concrete should be based on state highway standards. The minimum thickness of these pavements, as recommended in AC 150/5320-6, is 5 inches (127 mm).

(3) Shoulders and blast pads may have stabilized subbase and base. The stabilized subbase and base thicknesses should be determined using the equivalency factors in AC 150/5320-6 for converting aggregate subbase and base to stabilized subbase and base.

c. Drainage. Surface drainage should be maintained or improved in the shoulder and blast pad areas. Where a paved shoulder or blast pad abuts the runway, the joint should be flush, however, the shoulder may retain a 5 percent transverse slope. A 1.5 inch (3.8 cm) step is the standard at the edge of paved shoulders and blast pads to enhance drainage and to prevent fine graded debris from accumulating on the pavement. Base and subbase courses shall be of sufficient depth to maintain the drainage properties of granular base or subbase courses under the runway, taxiway, or apron pavement. An alternative is to provide a subdrain system with sufficient manholes to permit observation and flushing of the system.

d. Marking and Lighting. AC 150/5340-1 provides guidance for marking shoulders and blast pads. New construction should provide for edge lights to be base mounted and for the installation of any cable under the shoulder or blast pad pavement to be in conduit. When adding shoulders or blast pads to existing runways or taxiways, the existing runway or taxiway edge lighting circuitry, if not suitable, should be updated/modified prior to shoulder or blast pad paving.

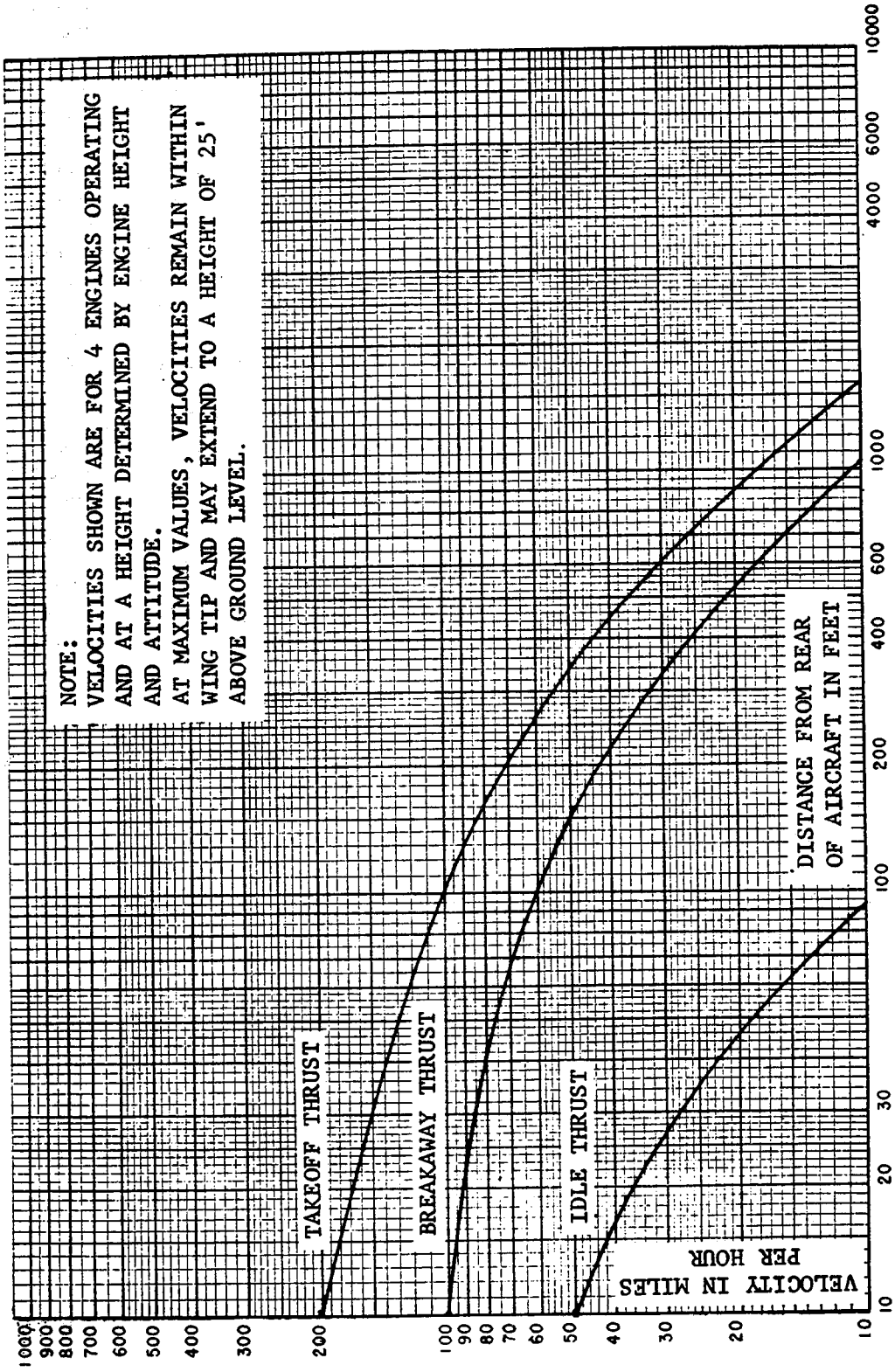

Figure 8-1. Velocity distance curves, DC-8

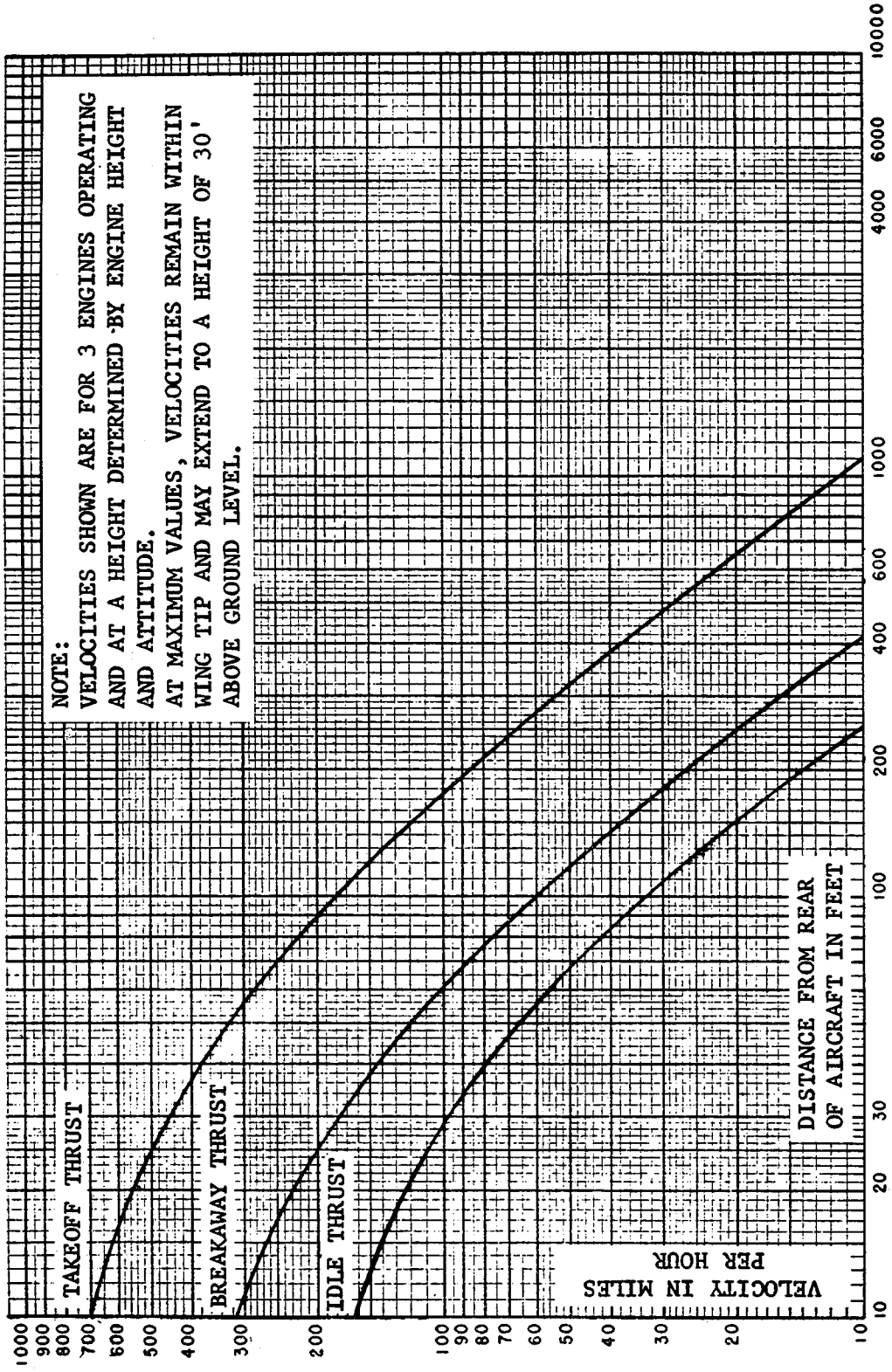

Figure 8-2. Velocity distance curves, B-727

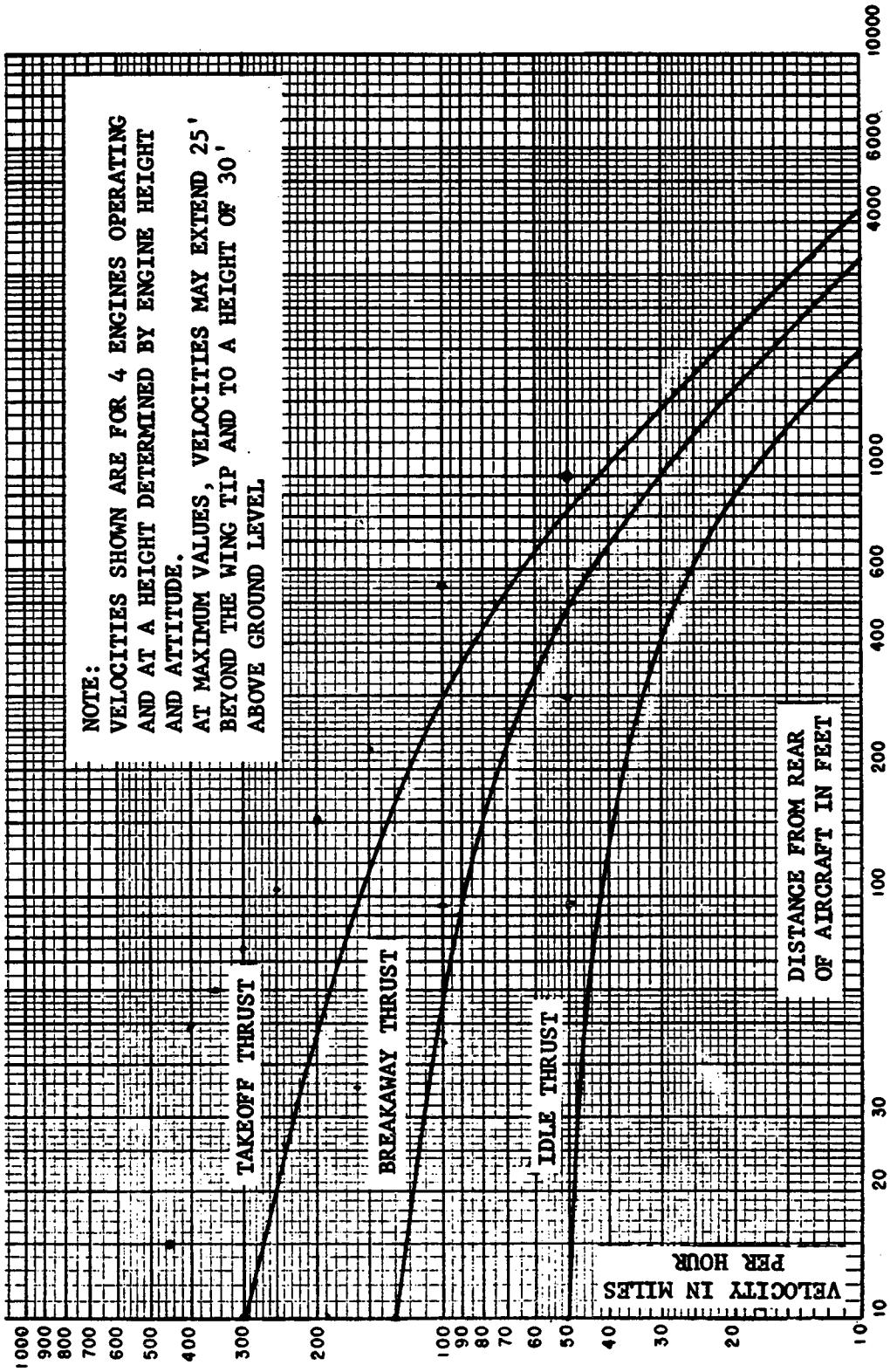

Figure 8-3. Velocity distance curves, B-747

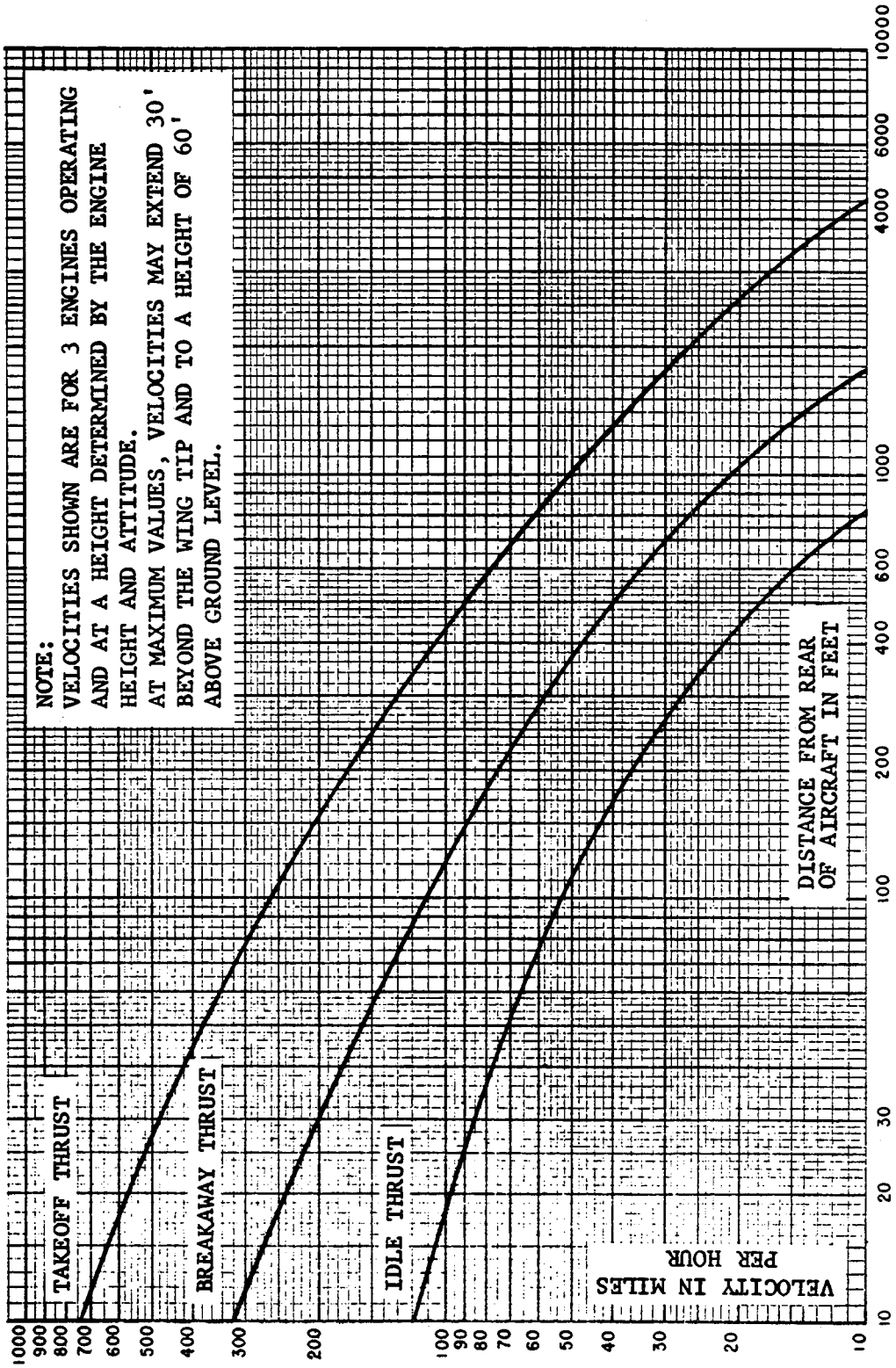

Figure 8-4. Velocity distance curves, DC-10

VELOCITY IN MILES/HOUR (KILOMETERS/HOUR)

Distance Behind Engine / Aircraft	20'(6 m)	40'(12 m)	60'(18 m)	80'(24 m)	100'(30 m)
Fan Jet Falcon					
Idle	82(132)	36(58)	25(40)	22(35)	18(29)
Breakaway 1/	150(241)	68(109)	46(74)	33(53)	27(43)
Takeoff	341(549)	155(249)	106(171)	75(121)	62(100)
Jet Commander, Lear Jet, & Hansa					
Idle	54(87)	24(39)	15(24)	11(18)	9(14)
Breakaway	114(183)	50(80)	31(50)	22(35)	18(29)
Takeoff	259(417)	114(183)	68(109)	52(84)	42(68)
Jet Star & Sabreliner					
Idle	92(148)	41(66)	25(40)	18(29)	15(24)
Breakaway	195(314)	85(137)	52(84)	39(63)	31(50)
Takeoff	443(713)	194(312)	119(192)	89(143)	72(116)
Gulfstream II					
Idle	153(246)	75(121)	48(77)	41(66)	34(55)
Breakaway	330(531)	150(241)	102(164)	72(116)	60(97)
Takeoff	750(1207)	341(549)	232(373)	164(264)	136(219)

1/ "Breakaway" is that percentage of power required to start airplanes moving and usually is approximately 55 percent of maximum continuous thrust.

Figure 8-5. Blast velocities of business jet airplanes

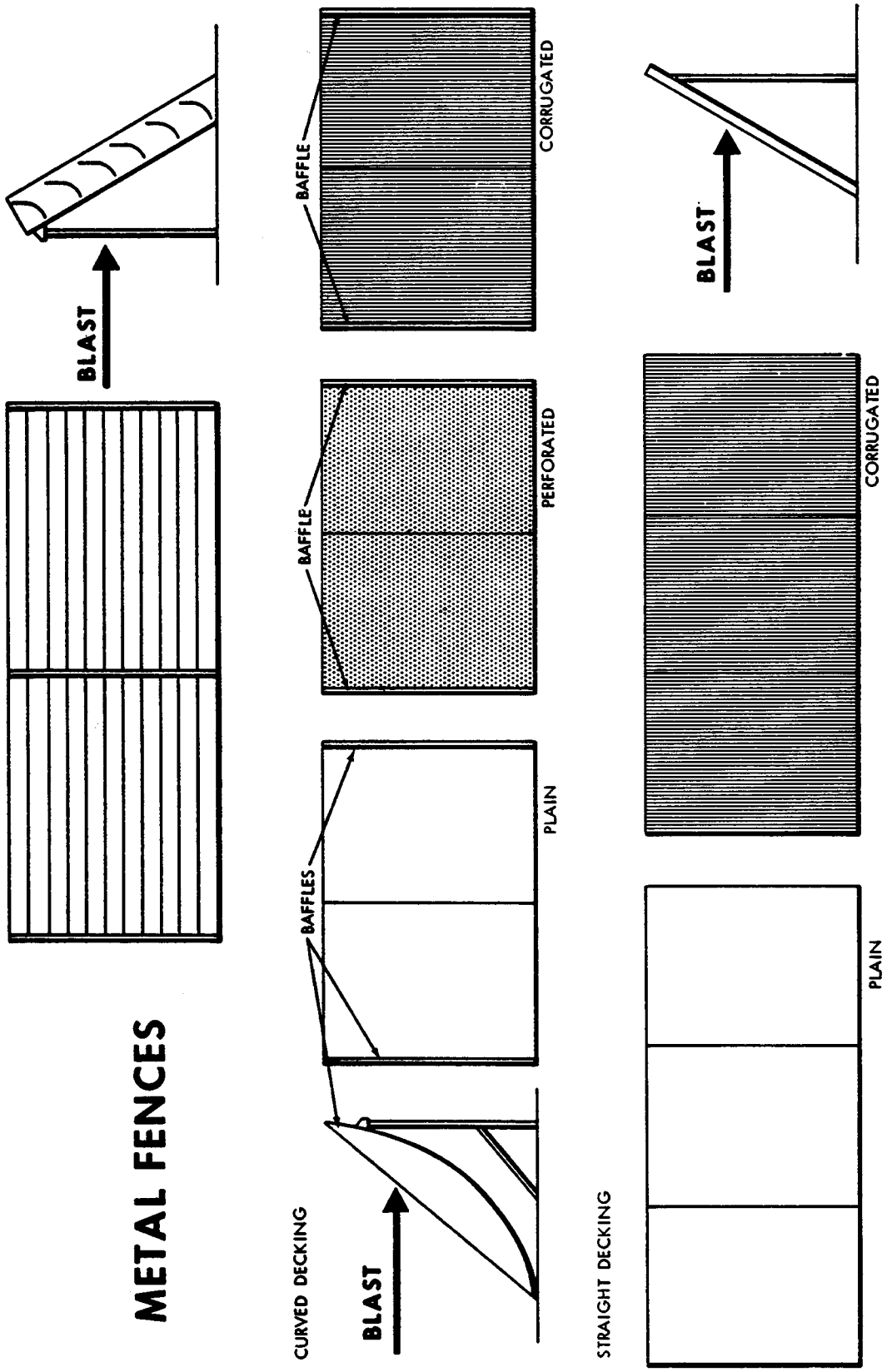

Figure 8-6. Typical blast deflector fences, metal

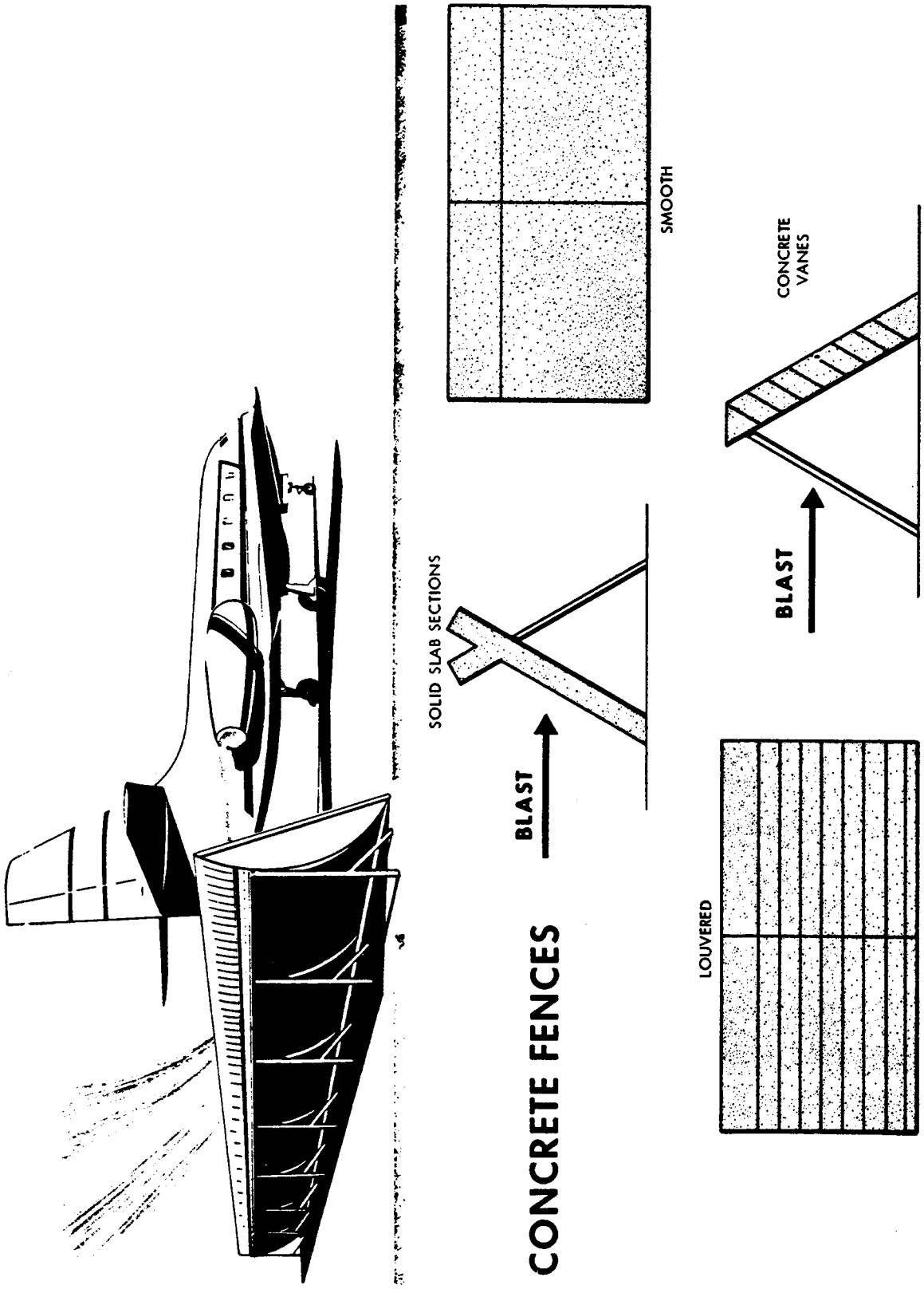

Figure 8-7. Typical blast deflector fences, concrete

Appendix 1. WIND ANALYSIS

1. OBJECTIVE. This appendix provides guidance on the assembly and analysis of wind data to determine runway orientation. It also provides guidance on analyzing the operational impact of winds on existing runways.

a. A factor influencing runway orientation and number of runways is wind. Ideally a runway should be aligned with the prevailing wind. Wind conditions affect all airplanes in varying degrees. Generally, the smaller the airplane, the more it is affected by wind, particularly crosswind components (see figure A1-1). Crosswinds are often a contributing factor in small airplane accidents.

b. Airport planners and designers should make an accurate analysis of wind to determine the orientation and number of runways. In some cases, construction of two runways may be necessary to give the desired wind coverage (95 percent coverage). The proper application of the results of this analysis will add substantially to the safety and usefulness of the airport.

2. CROSSWINDS. The crosswind component of wind direction and velocity is the resultant vector which acts at a right angle to the runway. It is equal to the wind velocity multiplied by the trigonometric sine of the angle between the wind direction and the runway direction. Normally, these wind vector triangles are solved graphically. An example is shown in figure A1-1. From this diagram, one can also ascertain the headwind and tailwind component for combinations of wind velocities and directions. Refer to paragraph 203 for allowable crosswind components.

3. COVERAGE AND ORIENTATION OF RUNWAYS. The most desirable runway orientation based on wind is the one which has the largest wind coverage and minimum crosswind components. Wind coverage is that percent of time crosswind components are below an acceptable velocity. The desirable wind coverage for an airport is 95 percent, based on the total numbers of weather observations. This value of 95 percent takes into account various factors influencing operations and the economics of providing the coverage. The data collection should be with an understanding of the objective; i.e., to attain 95-percent usability. At many airports, airplane operations are almost nil after dark, and it may be desirable to analyze the wind data on less than a 24-hour observation period. At airports where operations are predominantly seasonal, regard should be given to the wind data for the predominant-use period. At locations where provision of a crosswind runway is impractical due to severe terrain constraints, consideration may be given to increasing operational tolerance to crosswinds by upgrading the airport layout to the next higher airport reference code.

4. ASSEMBLING WIND DATA. The latest and best wind information should always be used to carry out a wind analysis. A record which covers the last 10 consecutive years of wind observations is preferred. Records of lesser duration may be acceptable on a case-by-case basis. In some instances, it may be highly desirable to obtain and assemble wind information for periods of particular significance; e.g., seasonal variations, instrument weather conditions, daytime versus nighttime, and regularly occurring gusts.

a. Data Source. The best sources of wind information is the National Oceanic and Atmospheric Administration, Environmental Data Service (EDS). The EDS's National Climatic Center, located in the Federal Building, Asheville, North Carolina 28801, is the repository of wind information from recording stations throughout the Nation. The Center should be contacted directly to determine the availability of data for a particular site. Refer to appendix 11 for details on the availability and purchase of wind data on disk in the standard FAA wind analysis format for use with the Airport Design Computer Program.

b. Data Costs. The EDS provides wind information at cost. The cost will vary, depending upon the complexity of the information desired, how the data are being stored, and whether the data have been assembled (summarized) previously. The wind summary for the airport site should be formatted with the standard 36 wind quadrants (the EDS standard for noting wind directions since January 1, 1964) and usual speed groupings (see figure A1-3). An existing wind summary of recent vintage is acceptable for analysis purposes if these standard wind direction and speed groupings are used. Figure A1-2 is an example of a typical EDS wind summary.

c. Data Not Available. In those instances when EDS data are not available for the site, it is permissible to develop composite wind data using wind information obtained from two or more nearby recording stations. Composite data are usually acceptable if the terrain between the stations and the

site is level or only slightly rolling. If the terrain is hilly or mountainous, composite data may only have marginal validity. In extreme cases it may be necessary to obtain a minimum of 1 year of onsite wind observations. These meager records should be augmented with personal observations (wind-bent trees, interviews with the local populace, etc.) to ascertain if a discernible wind pattern can be established. Airport development should not proceed until adequate wind data are acquired.

5. ANALYZING WIND DATA. One wind analysis procedure uses a scaled graphical presentation of wind information known as a windrose.

a. Drawing the Windrose. The standard windrose (figure A1-3) is a series of concentric circles cut by radial lines. The perimeter of each concentric circle represents the division between successive wind speed groupings. Radial lines are drawn so that the area between each successive pair is centered on the direction of the reported wind.

b. Plotting Wind Data. Each segment of the windrose represents a wind direction and speed grouping corresponding to the wind direction and speed grouping on the EDS summary. The recorded directions and speeds of the wind summary are converted to a percentage of the total recorded observations. Computations are rounded to the nearest one-tenth of 1 percent and entered in the appropriate segment of the windrose. Figure A1-4 illustrates a completed windrose based on data from figure A1-2. Plus (+) symbols are used to indicate direction and speed combinations which occur less than one-tenth of 1 percent of the time.

c. Crosswind Template. A transparent crosswind template is a useful aid in carrying out the windrose analysis. The template is essentially a series of three parallel lines drawn to the same scale as the windrose circles. The allowable crosswind for the runway width establishes the physical distance between the outer parallel lines and the centerline. When analyzing the wind coverage for a runway orientation, the design crosswind limit lines can be drawn directly on the windrose. NOTE: EDS wind directions are recorded on the basis of true north.

d. Analysis Procedure. The purpose of the analysis is to determine the runway orientation which provides the greatest wind coverage within the allowable crosswind limits. This can be readily estimated by rotating the crosswind template about the windrose center point until the sum of the individual segment percentages appearing between the outer "crosswind limit" lines is maximized. It is accepted practice to total the percentages of the segments appearing outside the limit lines and to subtract this number from 100. For analyses purposes, winds are assumed to be uniformly distributed throughout each of the individual segments. Figures A1-5 and A1-6 illustrate the analysis procedure as it would be used in determining the wind coverage for a runway, oriented 105-285, intended to serve all types of airplanes. The wind information is from figure A1-2. Several trial orientations may be needed before the orientation which maximizes wind coverage is found.

6. CONCLUSIONS. The example wind analysis shows that the optimum wind coverage possible with a single runway and a 13-knot crosswind is 97.28 percent. If the analysis had shown that it was not possible to obtain at least 95-percent wind coverage with a single runway, then consideration should be given to provide an additional (crosswind) runway oriented to bring the combined wind coverage of the two runways to at least 95 percent.

7. PRESUMPTIONS. The analysis procedures presume that winds are uniformly distributed over the area represented by each segment of the windrose. The larger the area, the less accurate is this presumption. Therefore, calculations made using nonstandard windrose directions or speeds result in a derivation of wind coverage (and its associated justification for a crosswind runway) which is questionable.

8. COMPUTER WIND ANALYSIS. Another wind analysis procedure uses a computer program. Figures A1-7, A1-8, and A1-9 are computer printouts based on the data from figure A1-2. The computed generated coverage in this example is 96.75 percent. Figures A1-10 and A1-11 are Lotus 1-2-3 cell-equations used to generate figures A1-7, A1-8, and A1-9 on an IBM PC compatible computer. Appendix 11 gives details on availability of another wind analysis computer program.

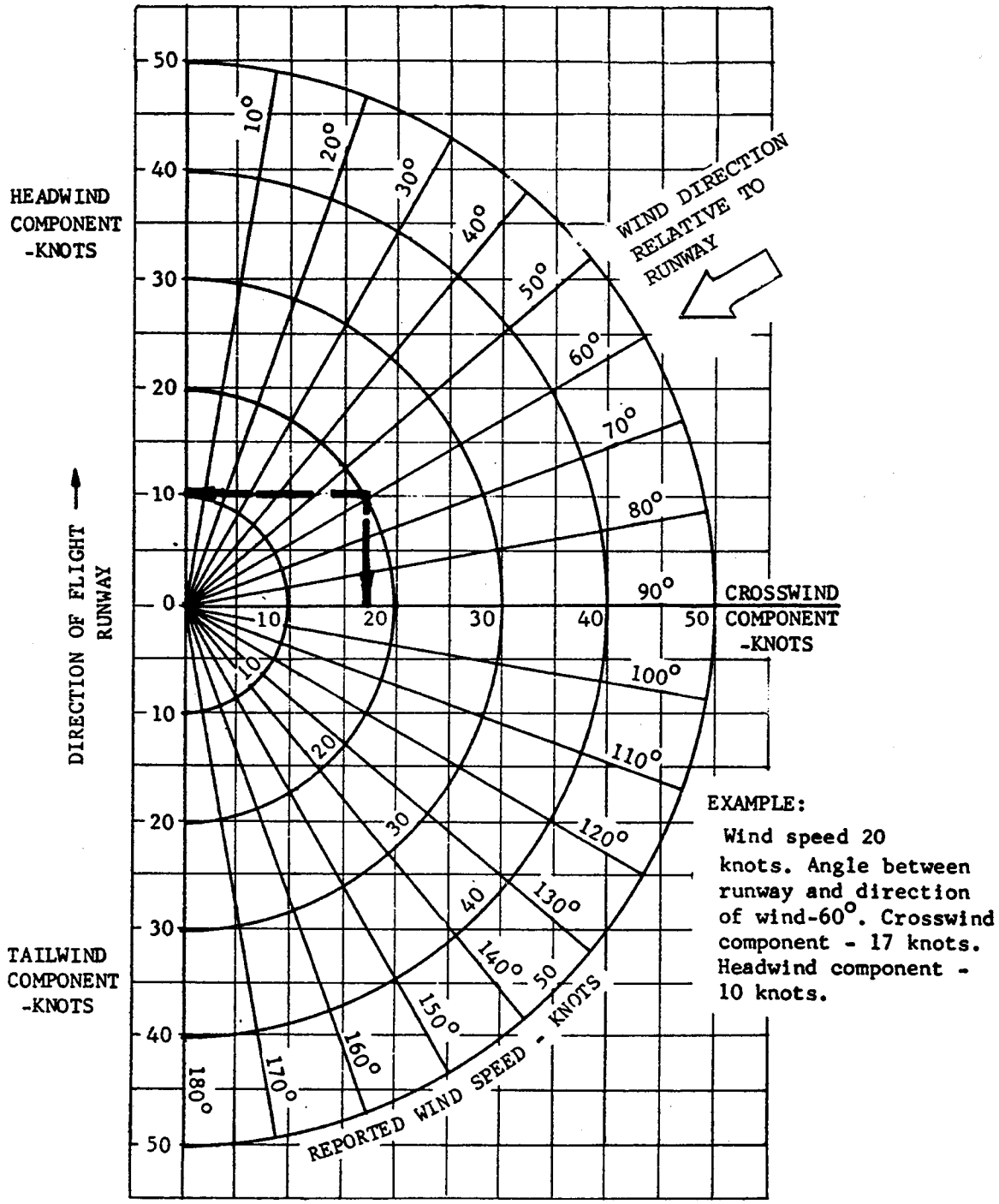

Figure A1-1. Wind vector diagram

WIND DIRECTION VERSUS WIND SPEED

STATION: Anywhere, USA HOURS: 24 Observations/Day PERIOD OF RECORD: 1964-1973

DIRECTION	HOURLY OBSERVATIONS OF WIND SPEED										AVERAGE SPEED	
	KNOTS 0-3	4-6	7-10	11-16	17-21	22-27	28-33	34-40	41 OVER	TOTAL	KNOTS	MPH
	MPH 0-3	4-7	8-12	13-18	19-24	25-31	32-38	39-46	47 OVER			
01	469	842	568	212						2091	6.2	7.1
02	568	1263	820	169						2820	6.0	6.9
03	294	775	519	73	9					1670	5.7	6.6
04	317	872	509	62	11					1771	5.7	6.6
05	268	861	437	106						1672	5.6	6.4
06	357	534	151	42	8					1092	4.9	5.6
07	369	403	273	84	36	10				1175	6.6	7.6
08	158	261	138	69	73	52	41	22		814	7.6	8.8
09	167	352	176	128	68	59	21			971	7.5	8.6
10	119	303	127	180	98	41	9			877	9.3	10.7
11	323	586	268	312	111	23	28			1651	7.9	9.1
12	618	1397	624	779	271	69	21			3779	8.3	9.6
13	472	1375	674	531	452	67				3571	8.4	9.7
14	647	1377	574	281	129					3008	6.2	7.1
15	338	1093	348	135	27					1941	5.6	6.4
16	560	1399	523	121	19					2622	5.5	6.3
17	587	883	469	128	12					2079	5.4	6.2
18	1046	1984	1068	297	83	18				4496	5.8	6.7
19	499	793	586	241	92					2211	6.2	7.1
20	371	946	615	243	64					2239	6.6	7.6
21	340	732	528	323	147	8				2078	7.6	8.8
22	479	768	603	231	115	38	19			2253	7.7	8.9
23	187	1008	915	413	192					2715	7.9	9.1
24	458	943	800	453	96	11	18			2779	7.2	8.2
25	351	899	752	297	102	21	9			2431	7.2	8.2
26	368	731	379	208	53					1739	6.3	7.2
27	411	748	469	232	118	19				1997	6.7	7.7
28	191	554	276	287	118					1426	7.3	8.4
29	271	642	548	479	143	17				2100	8.0	9.3
30	379	873	526	543	208	34				2563	8.0	9.3
31	299	643	597	618	222	19				2398	8.5	9.8
32	397	852	521	559	158	23				2510	7.9	9.1
33	236	721	324	238	48					1567	6.7	7.7
34	280	916	845	307	24					2372	6.9	7.9
35	252	931	918	487	23					2611	6.9	7.9
36	501	1568	1381	569	27					4046	7.0	8.0
00	7729									7729	0.0	0.0
TOTAL	21676	31828	19849	10437	3357	529	166	22		87864	6.9	7.9

Figure A1-2. Typical environmental data service wind summary

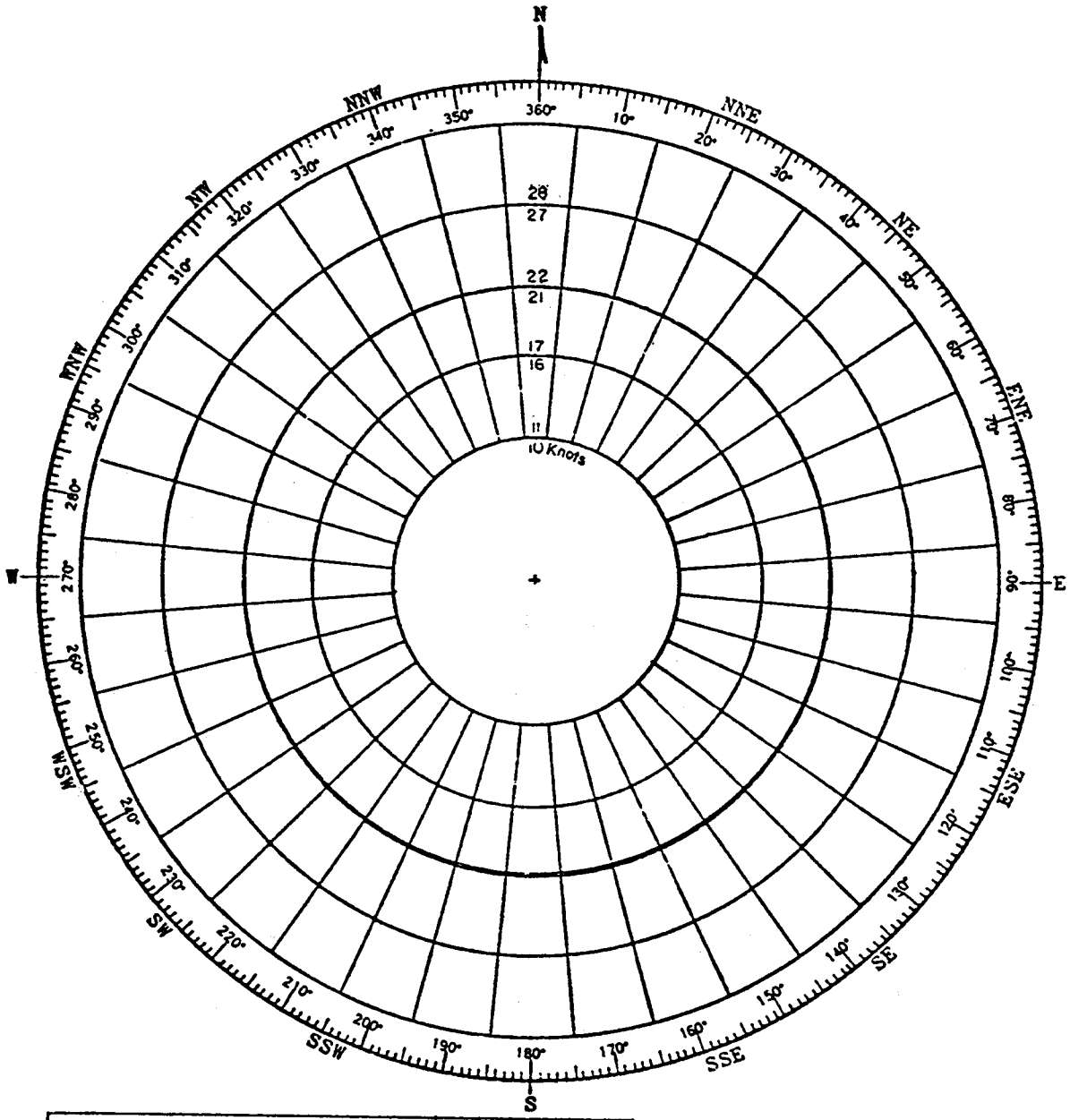

WIND SPEED DIVISIONS		RADIUS OF CIRCLE (KNOTS)
KNOTS	M.P.H.	
0 - 3.5	0 - 3.5	* 3.5 Units
3.5 - 6.5	3.5 - 7.5	* 6.5 "
6.5 - 10.5	7.5 - 12.5	10.5 - "
10.5 - 16.5	12.5 - 18.5	16.5 - "
16.5 - 21.5	18.5 - 24.5	21.5 - "
21.5 - 27.5	24.5 - 31.5	27.5 - "
27.5 - 33.5	31.5 - 38.5	*33.5 - "
33.5 - 40.5	38.5 - 46.5	*40.5 - "
40.5 - over	46.5 - over	

*May not be needed for most windrose analyses.

Figure A1-3. Windrose blank showing direction and divisions

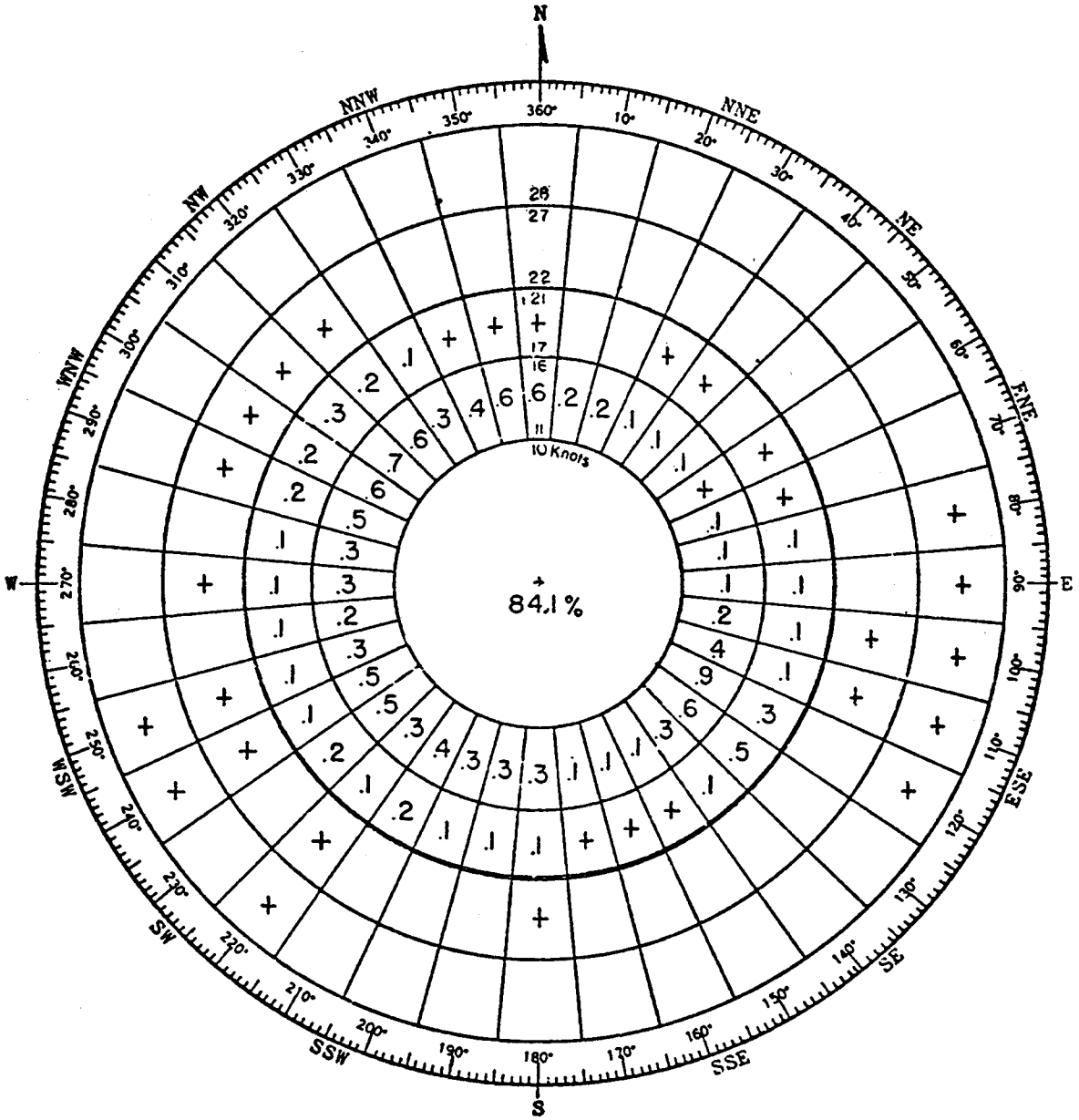

Figure A1-4. Completed windrose using figure A1-2 data

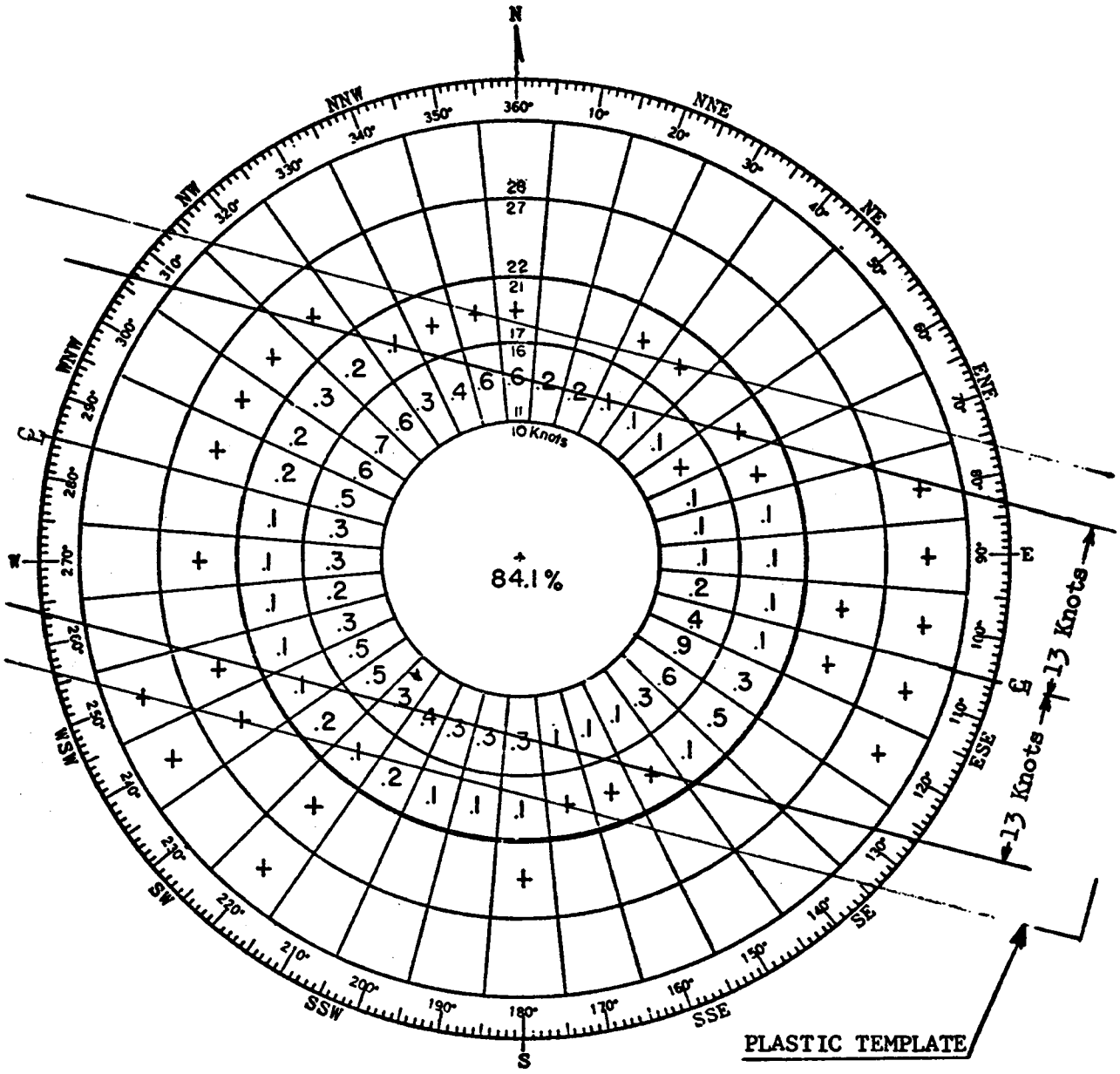

A runway oriented 105°-285° (true) would have 2.72% of the winds exceeding the design crosswind/crosswind component of 13 knots.

Figure A1-5. Windrose analysis

DIRECTION	ESTIMATED AREA NOT INCLUDED			
	11-16	17-21	22-27	28+
10	.12			
20	.12			
30	.05	+		
40	.04	+		
50	.01			
60		+		
70				
80			.01	+
90				
100				
110				
120				
130			.01	
140		.01		
150		+		
160	.01	+		
170	.04	+		
180	.14	.10	+	
190	.16	.10		
200	.16	.10		
210	.20	.20	+	
220	.11	.10	+	+
230	.03	.19		
240		.05	+	+
250		.01	+	+
260				
270				
280				
290				
300				
310				
320		.01	+	
330		.05		
340	.04	+		
350	.25	+		
360	.30	+		
SUM	1.78	.92	.02	+

1.78
.92
.02
2.72

100.00
2.72
97.28

100.00 - SUM = Coverage

100.00 - 2.72 =97.28% Coverage

Figure A1-6. Windrose analysis--estimating area not included

September 29, 1989 WIND OBSERVATIONS
STATION: ANYWHERE, USA
RUNWAY ORIENTATION: 105 DEGREE
CROSSWIND COMPONENT: 13 KNOTS
WIND COVERAGE: 96.746 %

DIRECTION	WIND SPEED (KNOTS)									
	0	4	7	11	17	22	28	34	41	
	3	6	10	16	21	27	33	40	99	
1				212						
2				169						
3				73	9					
4				62	11					
5				106						
6				42	8					
7				84	36	10				
8				69	73	52	41	22		
9				128	68	59	21			
10				180	98	41	9			
11				312	111	23	28			
12				779	271	69	21			
13				531	452	67				
14				281	129					
15				135	27					
16				121	19					
17				128	12					
18				297	83	18				
19				241	92					
20				243	64					
21				323	147	8				
22				231	115	38	19			
23				413	192					
24				453	96	11	18			
25				297	102	21	9			
26				208	53					
27				232	118	19				
28				287	118					
29				479	143	17				
30				543	208	34				
31				618	222	19				
32				559	158	23				
33				238	48					
34				307	24					
35				487	23					
36				569	27					
0	21676	31828	19849							
TOTAL:	21676	31828	19849	10437	3357	529	166	22	0	87864

Figure A1-7. Computer printout page 1

AREA NOT INCLUDED

STATION: ANYWHERE, USA
RUNWAY ORIENTATION: 105 DEGREE
CROSSWIND COMPONENT: 13 KNOTS

DIRECTION	WIND SPEED (KNOTS)								
	0	3.5	6.5	10.5	16.5	21.5	27.5	33.5	40.5
	3.5	6.5	10.5	16.5	21.5	27.5	33.5	40.5	99.5
1				0.6212	1	1	1	1	1 13.200 13
2				0.6212	1	1	1	1	1 13.200 13
3				0.5532	1	1	1	1	1 13.834 13.200
4				0.3986	1	1	1	1	1 15.011 13.834
5				0.1185	0.9910	1	1	1	1 16.970 15.011
6					0.6265	1	1	1	1 20.224 16.970
7					0.0385	0.7588	1	1	1 26 20.224
8						0.0242	0.4669	0.9150	1 38.009 26
9								0.0243	0.8525 74.864 38.009
10									0 1E+51 74.864
11									0 1E+51 74.864
12								0.0243	0.8525 74.864 38.009
13						0.0242	0.4669	0.9150	1 38.009 26
14					0.0385	0.7588	1	1	1 26 20.224
15					0.6265	1	1	1	1 20.224 16.970
16				0.1185	0.9910	1	1	1	1 16.970 15.011
17				0.3986	1	1	1	1	1 15.011 13.834
18				0.5532	1	1	1	1	1 13.834 13.200
19				0.6212	1	1	1	1	1 13.200 13
20				0.6212	1	1	1	1	1 13.200 13
21				0.5532	1	1	1	1	1 13.834 13.200
22				0.3986	1	1	1	1	1 15.011 13.834
23				0.1185	0.9910	1	1	1	1 16.970 15.011
24					0.6265	1	1	1	1 20.224 16.970
25					0.0385	0.7588	1	1	1 26 20.224
26						0.0242	0.4669	0.9150	1 38.009 26
27								0.0243	0.8525 74.864 38.009
28									0 1E+51 74.864
29									0 1E+51 74.864
30								0.0243	0.8525 74.864 38.009
31						0.0242	0.4669	0.9150	1 38.009 26
32					0.0385	0.7588	1	1	1 26 20.224
33					0.6265	1	1	1	1 20.224 16.970
34				0.1185	0.9910	1	1	1	1 16.970 15.011
35				0.3986	1	1	1	1	1 15.011 13.834
36				0.5532	1	1	1	1	1 13.834 13.200

Figure A1-8. Computer printout page 2

% WIND NOT COVERED

STATION: ANYWHERE, USA
RUNWAY ORIENTATION: 105 DEGREE
CROSSWIND COMPONENT: 13 KNOTS

DIRECTION	WIND SPEED (KNOTS)									TOTAL:
	0	3.5	6.5	10.5	16.5	21.5	27.5	33.5	40.5	
	3.5	6.5	10.5	16.5	21.5	27.5	33.5	40.5	99.5	
1				0.1498	0	0	0	0	0	0.1498
2				0.1194	0	0	0	0	0	0.1194
3				0.0459	0.0102	0	0	0	0	0.0562
4				0.0281	0.0125	0	0	0	0	0.0406
5				0.0142	0	0	0	0	0	0.0142
6					0.0057	0	0	0	0	0.0057
7					0.0015	0.0086	0	0	0	0.0102
8						0.0014	0.0217	0.0229	0	0.0461
9								0	0	0
10										0
11										0
12								0	0	0
13						0.0018	0	0	0	0.0018
14					0.0056	0	0	0	0	0.0056
15					0.0192	0	0	0	0	0.0192
16				0.0163	0.0214	0	0	0	0	0.0377
17				0.0580	0.0136	0	0	0	0	0.0717
18				0.1870	0.0944	0.0204	0	0	0	0.3019
19				0.1704	0.1047	0	0	0	0	0.2751
20				0.1718	0.0728	0	0	0	0	0.2446
21				0.2033	0.1673	0.0091	0	0	0	0.3797
22				0.1048	0.1308	0.0432	0.0216	0	0	0.3005
23				0.0557	0.2165	0	0	0	0	0.2722
24					0.0684	0.0125	0.0204	0	0	0.1014
25					0.0044	0.0181	0.0102	0	0	0.0328
26						0	0	0	0	0
27								0	0	0
28										0
29										0
30								0	0	0
31						0.0005	0	0	0	0.0005
32					0.0069	0.0198	0	0	0	0.0267
33					0.0342	0	0	0	0	0.0342
34				0.0414	0.0270	0	0	0	0	0.0684
35				0.2209	0.0261	0	0	0	0	0.2471
36				0.3582	0.0307	0	0	0	0	0.3890
TOTAL:	0	0	0	1.9459	1.0748	0.1357	0.0741	0.0229	0	3.2537

Figure A1-9. Computer printout page 3

Lines starting with + are worksheet format instructions.
Lines starting with a cell address are cell-formulas.
Lines starting with COPY and DATA FILL are Lotus 1-2-3 commands.

To run the program fill RANGE(D2..D4) with airport data (airport name D2, runway orientation D3, and crosswind component in knots D4) and fill RANGE(B11..J47) with wind data.

```
+ Set Global Column-Width at 7

E1: 'WIND OBSERVATIONS
A2: 'STATION:
A3: 'RUNWAY ORIENTATION:
E3: 'DEGREE
A4: 'CROSSWIND COMPONENT:
E4: 'KNOTS
A5: 'WIND COVERAGE:
D5: 100-L148
E5: '%
A7: 'DIRECTION
E7: 'WIND SPEED (KNOTS)
B8: 0
C8: 4
D8: 7
E8: 11
F8: 17
G8: 22
H8: 28
I8: 34
J8: 41
K8: 100
A9: '
B9: 3
C9: 6
D9: 10
E9: 16
F9: 21
G9: 27
H9: 33
I9: 40
J9: 99
DATA FILL RANGE(A11..A46)  WITH 1 TO 36
A47: 0
A48: 'TOTAL:
B48: @SUM(B11..B47)
COPY CELL B48 TO RANGE(B48..J48)
K48: @MAX(1,@SUM(B48..J48))
A50: |::
```

Figure A1-10. Lotus cell-formulas page 1

```
E51: 'AREA NOT INCLUDED
A52: +A2
COPY CELL A52 TO RANGE(A52..A54)
D52: +D2
COPY CELL D52 TO RANGE(D53..E54)
A57: +A7
E57: +E7
B58: (A9+B8)/2
COPY CELL B58 TO RANGE(B58..J58)
B59: (B9+C8)/2
COPY CELL B59 TO RANGE(B59..J59)
A61: +A11
COPY CELL A61 TO RANGE(A61..A96)
B61: @IF($K61<=B$58,1,@IF($L61>B$59,$A$9,(B$59^2-$K61*$L61+
     @IF($K61<B$59,0,$L61*($K61-B$59)^2/($K61-$L61))-
     @IF($L61>B$58,0,$K61*(B$58-$L61)^2/($K61-$L61)))/(B$59^2-B$58^2)))
COPY CELL B61 TO RANGE(B61..J96)
K61: @MAX($D$4/(@MAX(@ABS(@SIN(($D$3-A61*10+5)*@PI/180)),1.0000000E-50)),
     $D$4/(@MAX(@ABS(@SIN(($D$3-A61*10-5)*@PI/180)),1.0000000E-50)))
COPY CELL K61 TO RANGE(K61..K96)
L61: @MIN($D$4/(@MAX(@ABS(@SIN(($D$3-A61*10+5)*@PI/180)),1.0000000E-50)),
     $D$4/(@MAX(@ABS(@SIN(($D$3-A61*10-5)*@PI/180)),1.0000000E-50)))
COPY CELL L61 TO RANGE(L61..L96)
A100: |::
E101: '% WIND NOT COVERED
A102: +A2
COPY CELL A102 TO RANGE(A102..A104)
D102: +D2
COPY CELL D102 TO RANGE(D103..E104)
A107: +A7
E107: +E7
L107: 'TOTAL:
B108: +B58
COPY CELL B108 TO RANGE(B108..J109)
A111: +A61
COPY CELL A111 TO RANGE(A111..A146)
B111: @IF(B61=0,$A$9,100*(B61*B11)/$K$48)
COPY CELL B111 TO RANGE(B111..J146)
L111: @SUM(B111..J111)
COPY CELL L111 TO RANGE(L111..L146)
A148: 'TOTAL:
B148: @SUM(B111..B146)
COPY CELL B148 TO RANGE(B148..J148)
L148: @SUM(L111..L146)
A150: |::
```

Figure A1-11. Lotus cell-formulas page 2

Appendix 2. THRESHOLD SITING REQUIREMENTS

1. PURPOSE. This appendix contains guidance on locating thresholds to meet approach obstacle clearance requirements.

2. APPLICATION.

a. The threshold should be located at the beginning of the full-strength runway pavement or runway surface. However, displacement of the threshold may be required when an object that obstructs the airspace required for landing airplanes is beyond the airport owner's power to remove, relocate, or lower. Thresholds may also be displaced for environmental considerations, such as noise abatement, or to provide the standard RSA and ROFA lengths.

b. When a hazard to air navigation exists, the amount of displacement of the threshold should be based on the operational requirements of the most demanding airplanes. The standards in this appendix minimize the loss of operational use of the established runway. These standards reflect FAA policy of maximum utilization and retention of existing paved areas on airports.

c. Displacement of a threshold reduces the length of runway available for landings. Depending on the reason for displacement of the threshold, the portion of the runway behind a displaced threshold may be available for takeoffs in either direction and landings from the opposite direction. Refer to appendix 14 for additional information.

3. LIMITATIONS.

a. These standards should not be interpreted as an FAA blanket endorsement of the alternative to displace or relocate a runway threshold. Threshold displacement or relocation should be undertaken only after a full evaluation reveals that displacement or relocation is the only practical alternative.

b. The standards in this appendix are not applicable for identifying objects affecting navigable airspace (FAR Part 77) or zoning to limit the height of objects around airports (AC 150/5190-4).

4. EVALUATION CONSIDERATIONS.

a. When a penetration to a surface defined in paragraph 5 (threshold siting surfaces) exists, one or more of the following actions is required:

(1) The object is removed or lowered to preclude penetration of applicable threshold siting surfaces;

(2) The threshold is displaced to preclude object penetration of applicable threshold siting surfaces, with a resulting shorter landing distance; or

(3) Visibility minimums are raised.

b. Relevant factors for evaluation include:

(1) Types of airplanes which will use the runway and their performance characteristics.

(2) Operational disadvantages associated with accepting higher landing minimums.

(3) Cost of removing, relocating, or lowering the object.

(4) Effect of the reduced available landing length when the runway is wet or icy.

(5) Cost of extending the runway if insufficient runway length would remain as a result of displacing the threshold. The environmental and public acceptance aspects of a runway extension need also be evaluated under this consideration.

(6) Cost and feasibility of relocating visual and electronic approach aids, such as threshold lights, visual approach slope indicator, runway end identification lights, localizer, glide slope (to provide a threshold crossing height of not more then 60 feet (18 m)), approach lighting system, and runway markings.

(7) Effect of the threshold change on noise abatement.

5. LOCATING, DISPLACING, OR RELOCATING THE THRESHOLD. The standard shape, dimensions, and slope of the surface used for locating a threshold is dependent upon the type of aircraft operations currently conducted or forecasted, the landing visibility minimums desired, and the types of instrumentation available or planned for that runway end.

a. For Approach End of Runways Expected to Serve Small Airplanes With Approach Speeds Less Than 50 Knots.

(1) No object should penetrate a surface that starts at the threshold and at the elevation of the runway centerline at the threshold and slopes upward from the threshold at a slope 15 (horizontal) to 1 (vertical).

(2) In the plan view, the centerline of this surface extends 3,000 feet (900 m) along the extended runway centerline. This surface extends laterally 60 feet (18 m) on each side of the centerline at the threshold and increases in width to 150 feet (45 m) at a point 500 feet (150 m) from the threshold; thereafter, it extends laterally 150 feet (45 m) on each side of the centerline. (See figures A2-1 and A2-2.)

b. For Approach End of Runways, Including STOL Runways, Expected to Serve Small Airplanes With Approach Speeds of 50 Knots or More.

(1) No object should penetrate a surface that starts at the threshold and at the elevation of the runway centerline at the threshold and slopes upward from the threshold at a slope 20 (horizontal) to 1 (vertical).

(2) In the plan view, the centerline of this surface extends 5,000 feet (1 530 m) along the extended runway centerline. This surface extends laterally 125 feet (38 m) on each side of the centerline at the threshold and increases in width to 350 feet (110 m) at a point 2,250 feet (690 m) from the threshold; thereafter, it extends laterally 350 feet (110 m) on each side of the centerline. (See figures A2-1 and A2-2.)

c. For Approach End of Runways, Including STOL Runways, Expected to Serve Large Airplanes.

(1) No object should penetrate a surface that starts at the threshold and at the elevation of the runway centerline at the threshold and slope upward from the threshold at a slope 20 (horizontal) to 1 (vertical).

(2) In the plan view, the centerline of this surface extends 10,000 feet (3 000 m) along the extended runway centerline. This surface extends laterally 200 feet (60 m) on each side of the centerline at the threshold and increases in width to 500 feet (150 m) at a point 1,500 feet (450 m) from the threshold; thereafter, it extends laterally 500 feet (150 m) on each side of the centerline. (See figures A2-1 and A2-2.)

d. For Approach End of Runways, Except STOL Runways, Expected to Accommodate Instrument Approaches Having Visibility Minimums Lower Than 1 Mile.

(1) No object should penetrate a surface that starts 200 feet (60 m) out from the threshold and at the elevation of the runway centerline at the threshold and slopes upward from the starting point at a slope of 20 (horizontal) to 1 (vertical).

(2) In the plan view, the centerline of this surface extends 10,000 feet (3 000 m) along the extended runway centerline. This surface extends laterally 500 feet (150 m) on each side of the centerline at the starting point and increases in width to 2,000 feet (600 m) at the far end of this surface. (See figures A2-1 and A2-2.)

(3) If the instrument approach procedure utilizes an offset localizer with an offset angle of 3 degrees or less, the above surface is centered upon the final approach course rather than the extended runway centerline. (See figure A2-3.)

e. For Approach End of Runways, Except STOL Runways, Expected to Accommodate Instrument Approaches Having Visibility Minimums Lower Than 3/4 Mile.

(1) No object should penetrate a surface that starts 200 feet (60 m) out from the threshold and at the elevation of the runway centerline at the threshold and slopes upward from the starting point at a slope of 34 (horizontal) to 1 (vertical).

(2) In the plan view, the centerline of this surface extends 10,000 feet (3 000 m) along the extended runway centerline. This surface extends laterally 500 feet (150 m) on each side of the centerline at the starting point and increases in width to 2,000 feet (600 m) at the far end of this surface. (See figures A2-1 and A2-2.)

(3) If the instrument approach procedure utilizes an offset localizer with an offset angle of 3 degrees or less, the above surface is centered upon the final approach course rather than the extended runway centerline. (See figure A2-3.)

f. For Approach End of Runways Expected to Accommodate Category II Approach Minimums. Criteria are set forth in AC 120-29.

g. For STOL Runways. Criteria are set forth in Appendix 4, MLS STOL Procedures, of Order 8260.30 and the preceding paragraphs.

RUNWAY TYPE	DIMENSIONAL STANDARDS FEET (METERS)					
	A	B	C	D	E	SLOPE
a. Approach end of runways expected to serve small airplanes with approach speeds less than 50 knots.	0	60 (18)	150 (45)	500 (150)	2,500 (750)	15:1
b. Approach end of runways, including STOL runways, expected to serve small airplanes with approach speeds of 50 knots or more.	0	125 (38)	350 (110)	2,250 (690)	2,750 (840)	20:1
c. Approach end of runways, including STOL runways, expected to serve large airplanes.	0	200 (60)	500 (150)	1,500 (450)	8,500 (2 550)	20:1
d. Approach end of runways, except STOL runways, having visibility minimums lower than 1 mile.	200 (60)	500 (150)	2,000 (600)	10,000 (3 000)	0	20:1
e. Approach end of runways, except STOL runways, having visibility minimums lower than 3/4 mile.	200 (60)	500 (150)	2,000 (600)	10,000 (3 000)	0	34:1
f. Approach runway ends having Category II approach minimums.	The criteria are set forth in AC 120-29.					
g. STOL runways.	The criteria are set forth in appendix 4 of Order 8260.30.					

The letters are keyed to those shown on figures A2-2 and A2-3.

Figure A2-1. Dimensional standards for locating thresholds

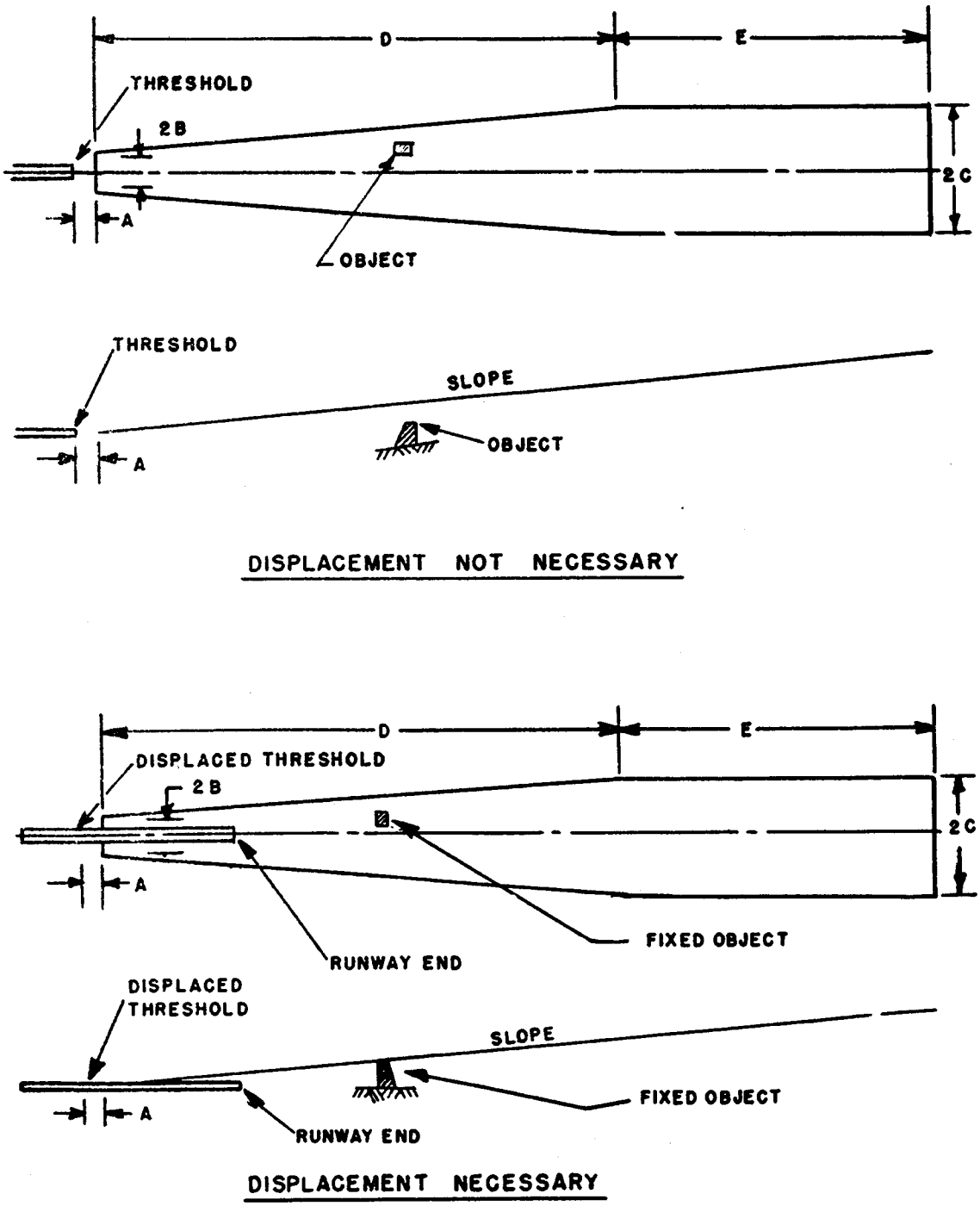

Figure A2-2. Approach slopes

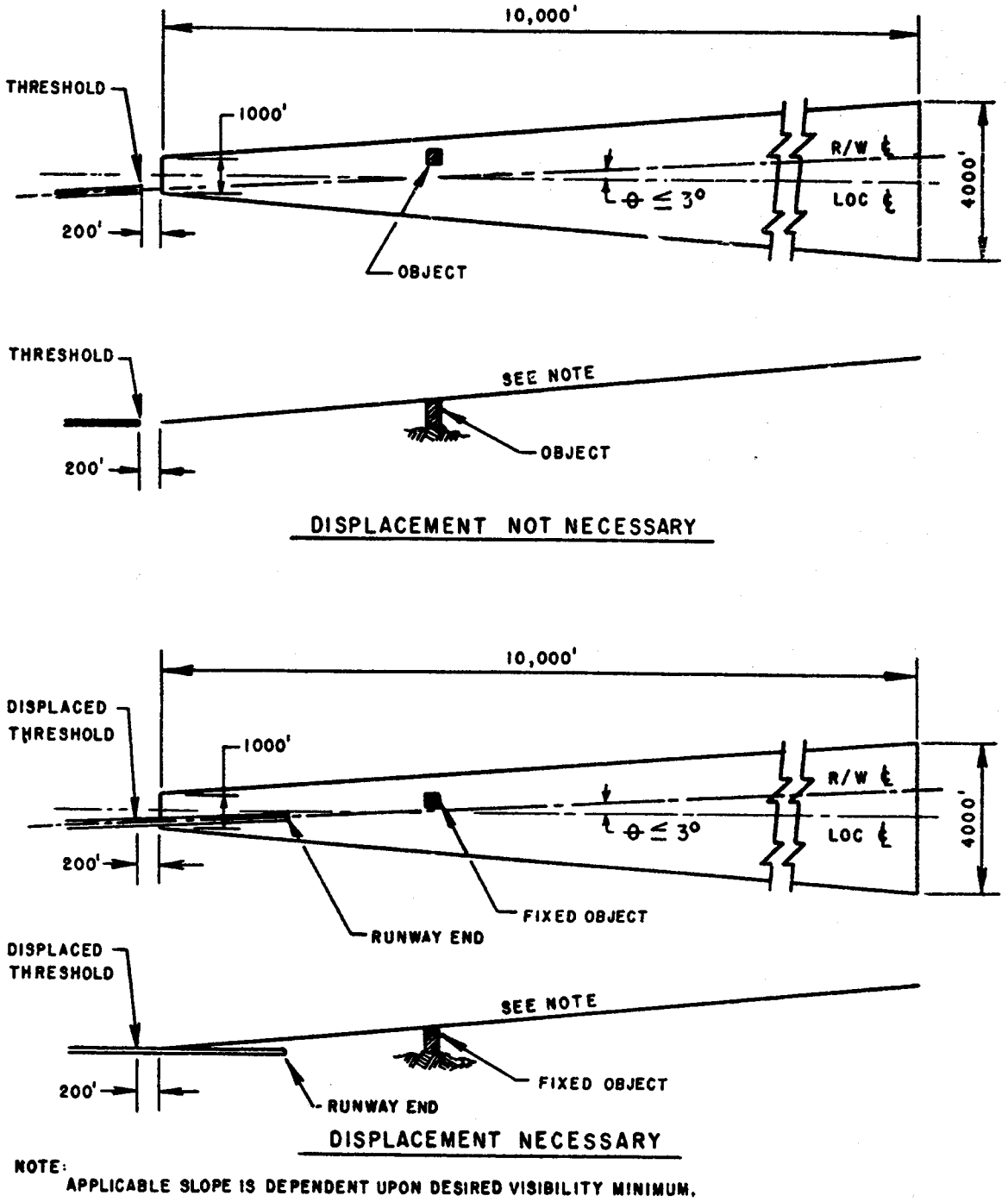

Figure A2-3. Approach slopes--offset localizer

Appendix 3. AIRPORT REFERENCE POINT

1. DISCUSSION.

a. The airport reference point (ARP) geographically locates the airport horizontally. The ARP is normally not monumented or physically marked on the ground. The computation of this point uses only runway length.

b. Meaningful airport reference point computations use the ultimate runway lengths proposed for development. These computations do not use closed or abandoned areas. The FAA approved airport layout plan shows the ultimate development. If there is no airport layout plan, the ultimate runway lengths are the existing runways plus those which have airspace approval, less closed or abandoned areas.

c. The ARP is computed or recomputed as infrequently as possible. The only time that a recomputation is needed is when the proposed ultimate development is changed.

2. SAMPLE COMPUTATION. The following procedure determines the location of the airport reference point used in FAR Part 77 studies.

a. Establish two base lines perpendicular to each other as shown in Figure A3-1. Let the northerly base line be known as B and the westerly as A.

b. Establish the midpoint of each runway.

c. Determine the perpendicular distance from the base lines to the midpoints.

d. Calculate the moment of areas for each base line as shown in Figure A3-2.

e. Divide each moment of area by the sum of areas to determine distance of the ARP from each base line.

f. The location is converted into latitude and longitude.

3. ACCURACY. The latitude and longitude should be to the nearest second. Installation of navigational aids may need coordinates to the nearest tenth of a second. Coordinate with the appropriate FAA Airway Facilities field office to ascertain the need for accuracy closer than the nearest second.

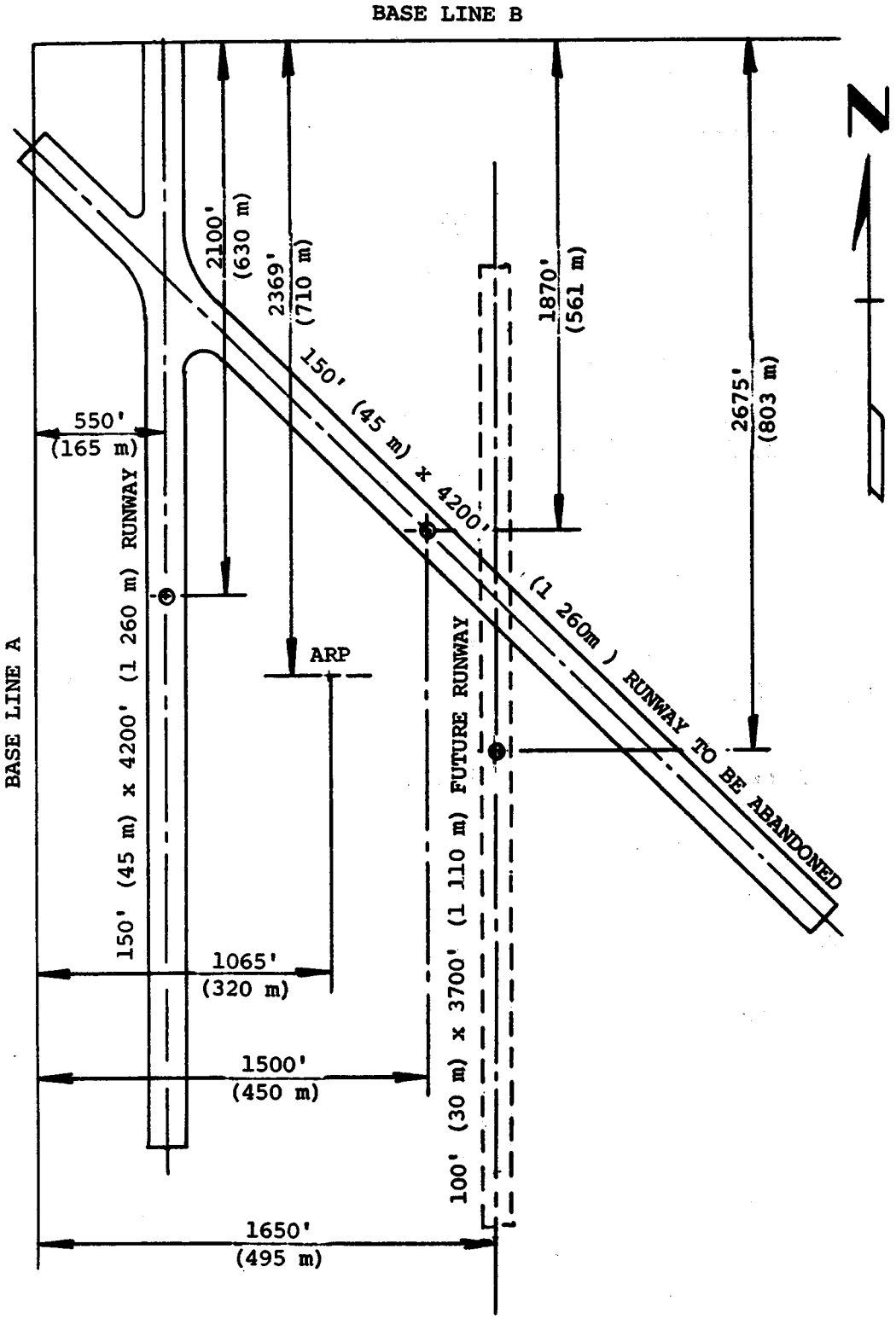

Figure A3-1. Sample layout

U.S. Customary Units

BASE LINE A:

4,200	x	550	=	2,310,000
3,700	x	1,650	=	6,105,000
7,900				8,415,000

$$= \frac{8,415,000}{7,900} = 1,065'$$

BASE LINE B:

4,200	x	2,100	=	8,820,000
3,700	x	2,675	=	9,897,500
7,900				18,717,500

$$= \frac{18,717,500}{7,900} = 2,369'$$

Metric Units

BASE LINE A:

1 266	x	165	=	207 900
1 110	x	495	=	549 450
2 370				757 350

$$= \frac{757\ 350}{2\ 370} = 320\ \text{m}$$

BASE LINE B:

1 266	x	630	=	793 800
1 110	x	803	=	891 330
2 370				1 685 130

$$= \frac{1\ 685\ 130}{2\ 370} = 710\ \text{m}$$

Note: Since diagonal runway is to be abandoned, it is not used in the computation.

Figure A3-2. Sample computation - airport reference point

Appendix 4. COMPASS CALIBRATION PAD

1. PURPOSE. This appendix provides guidelines for the design, location and construction of a compass calibration pad and basic information concerning its use in determining the deviation error in an aircraft magnetic compass.

2. BACKGROUND.

a. An aircraft magnetic compass is a navigation instrument with certain inherent errors resulting from the nature of its construction. All types of magnetic compasses indicate direction with respect to the earth's magnetic field. This is true even for the gyro-stabilized and/or fluxgate compasses. Aircraft navigation is based on applying the appropriate angular corrections to the magnetic reading in order to obtain the true heading.

b. The aircraft magnetic compass should be checked following pertinent aircraft modifications and on a frequent, routine schedule. One method of calibrating the compass is to use a compass calibration pad to align the aircraft on known magnetic headings and make adjustments to the compass and/or placard markings to indicate the required corrections. There are other methods available for calibrating a magnetic compass, but for small aircraft the method outlined herein is normally used.

3. APPLICATION.

a. The process of aligning an aircraft on known magnetic headings for the purpose of determining the degree of error in the magnetic compass is commonly referred to as "swinging the compass." The technique which should be used is as follows:

(1) Place the aircraft on a compass calibration pad.

(2) Place the aircraft in level flying position.

(3) Remove compensating magnets from chambers or reset the fixed compensating magnets to neutral position, whichever is applicable, before swinging.

(4) Check indicator for fluid level and cleanliness. If fluid is required, the compass is defective.

(5) Check the pivot friction of the indicator by deflecting the card with a small magnet. The card should rotate freely in a horizontal plane.

(6) If a radio is used in the aircraft, there should be corrections noted for "radio on" and "radio off" conditions.

(7) Align the aircraft with the north magnetic heading and make the indicated reading correspond to the actual magnetic reading by use of the compensating magnets. Repeat for the east magnetic heading. Then place on south and west magnetic headings and remove half of indicated error by adjusting compensators. Engine(s) should be running.

(8) Turn the aircraft on successive 30-degree headings through 360 degrees. Placards should be marked to indicate correction at each 30-degree heading showing "radio on" and "radio off" corrections.

b. Calibration and adjustment of remote indicating gyro compasses, polar path compasses, and other systems of this type should be by a qualified instrument technician.

4. DESIGN OF COMPASS CALIBRATION PAD. The design details shown in this appendix should be considered as guidance only and variations of these designs are acceptable provided the general requirements are met.

a. The compass calibration pad provides a series of 12 radials, either painted on with nonmetallic paint or inlaid in the surface of the calibration pad, extending toward predetermined magnetic directions every 30 degrees beginning with magnetic north. Each radial should be marked with three separate magnetic headings; one at the end of the radial indicating the direction along which each line lies; and one on each side of the line which indicates the magnetic heading of the aircraft when it is oriented at 90 degrees to the radial. Markings facing the pilot must correspond to the airplane's heading when traveling in that direction. The markings must be large enough to be easily read from the aircraft cockpit as the radial is being approached. The last zero may be dropped from the heading designation. Figure A4-1 shows a layout of markings.

b. Figures A4-2 and A4-3 depict suggested types of calibration pads. Type I, as shown in figure A4-2, can be either rigid or flexible pavement construction. Type II, as shown in figure A4-3, is applicable only to rigid pavements. The pavement thickness of either type shall be as required to support the user aircraft in a critical area in accordance with AC 150/5320-6. The concrete pavements, joint type, and spacing shall conform to standard practices, without no magnetic materials. Therefore, dowels (where required) shall be of aluminum, brass, or bronze, rather than steel.

c. Make the size of the calibration pad compatible with the requirements of the user aircraft. For small airplanes make the radius of the pad 50 feet (15 m); for basic transports make the radius 60 feet (18 m); for large two- and three-engine jets, other than basic transports, and all large propeller-driven airplanes make the radius 80 feet (24 m); and for large four-engine jets, other than basic transports, make the radius 110 feet (33 m). For aircraft over 300,000 pounds (136 000 kg), an analysis of the turning area required for the aircraft will be necessary to determine adaptability to the dimensions specified herein.

d. The Type II compass calibration pad shown in figure A4-3 provides wheel slots to assist in true alignment of aircraft normal to each radial. It may be desirable to construct a special device for use in obtaining true alignment for the calibration pad shown in figure A4-2. One method of establishing control points consists of hollow shell non-magnetic inserts along each radial. A wooden block with aluminum or bronze bolts to fit into the center hole of the brass insert can then be used to provide an accurate alignment of the aircraft wheels. Figure A4-1 shows design details of this system.

e. There are many satisfactory ways of providing a device to wheelblock an aircraft to obtain the required alignment, and the exact method is left to the discretion of the design engineer. The method detailed in Figure A4-1 is one suggestion. One alternative which comes to mind is the possibility of forming holes in the concrete with some form of removable dowel, rather than constructing the specially built brass inserts.

5. <u>LOCATION OF COMPASS CALIBRATION PAD</u>. The requirements specified herein have been determined through consultation with instrument calibration specialists, fixed base operators, and persons in the Geological Survey with considerable experience in performing surveys of compass calibration pads.

a. Locate the site at least 300 feet (90 m) from power and communication cables (both above and below ground) and from other aircraft. Locate the site at least 600 feet (180 m) from large magnetic objects such as buildings, railroad tracks, high voltage electrical transmission lines, or cables carrying direct current (either above or below ground). In order to prevent interference with electronic navigational aid facilities located on the airport, make sure that the required clearances are maintained as specified in chapter 6. Control cables, runway and taxiway light bases or sign fixtures, pipelines, ducts, grates for drainage, distance remaining signs, and aircraft arresting gear should be avoided when they contain ferrous materials.

b. The compass calibration pad must be located off the side of a taxiway or runway a sufficient distance to satisfy the runway and taxiway clearances applicable to the airport on which it is located.

c. After tentative selection of a site through visual application of appropriate criteria contained herein, make a thorough magnetic survey of the site. Many sites which meet all visually applied criteria regarding distances from structures, etc., still are unsatisfactory because of locally generated or natural magnetic anomalies. At locations near heavy industrial areas, intermittent magnetic variations may be experienced and sufficient surveys at various periods of time are necessary to ascertain if this situation exists.

d. The difference between magnetic and true north must be uniform in the vicinity of the site. Make sufficient surveys to determine that the angular difference between true and magnetic north measured at any point does not differ from the angular difference measured at any other point by more than one-half degree within a space between 2 and 10 feet (0.6 and 3 m) above the surface of the base and extending over an area within a 250-foot (75 m) radius from the center.

6. <u>CONSTRUCTION OF COMPASS CALIBRATION PAD</u>. For pavement construction, the applicable portions of AC 150/5320-6 should be used. The following additional information is important:

a. Do not use magnetic materials, such as reinforcing steel or ferrous aggregate, in the construction of the calibration pad or of any pavement within a 300-foot (90 m) radius of the center of the

site. If a drainage pipe is required within 300 feet (90 m) of the center of the site, use a nonmetallic or aluminum culvert.

b. Each of the radials is oriented within one minute of the magnetic bearing indicated by its markings.

c. Mark the date of observation and any annual change in direction of magnetic north durably and legibly on the surface of the calibration pad near the magnetic north mark. It would be well to establish a permanent monument at some remote location on the true north radial for future reference.

d. The U.S. Geological Survey of the Department of Interior is available to conduct the necessary surveys to determine the difference between true and magnetic north and the uniformity of this difference. The cost for this service is that necessary to cover the expense to the U.S. Geological Survey. Request for this service should be made to the following: Branch of Global Seismology and Geomagnetism, U.S. Geological Survey, Mail Stop 967, Box 25046, Denver Federal Center, Denver, Colorado 80225, Telephone: Area Code (303) 236-1512. There are also many other competent registered surveyors or engineers who are capable of performing these surveys. It is recommended that a qualified engineer be employed to lay out the work in the field and to design the pavement for the critical aircraft that can reasonably be expected to use the pad.

e. After all construction work on the compass pad is completed, it is advisable to have the pad magnetically resurveyed to guard against the possibility of objectionable magnetic materials being introduced during the construction.

f. Magnetic surveys of existing compass calibration pads should be performed at regular intervals of 5 years or less. Additional surveys should be performed after major construction of utility lines, buildings, or any other structures within 600 feet (180 m) of the center of the pad.

7. VOR CHECKPOINT. At some airports, it may be advantageous to collocate a VOR checkpoint with the compass calibration pad. In such instances, the requirements presented in paragraph 201.3212 of FAA Handbook OA P 8200.1, United States Standard Flight Inspection Manual, should be followed.

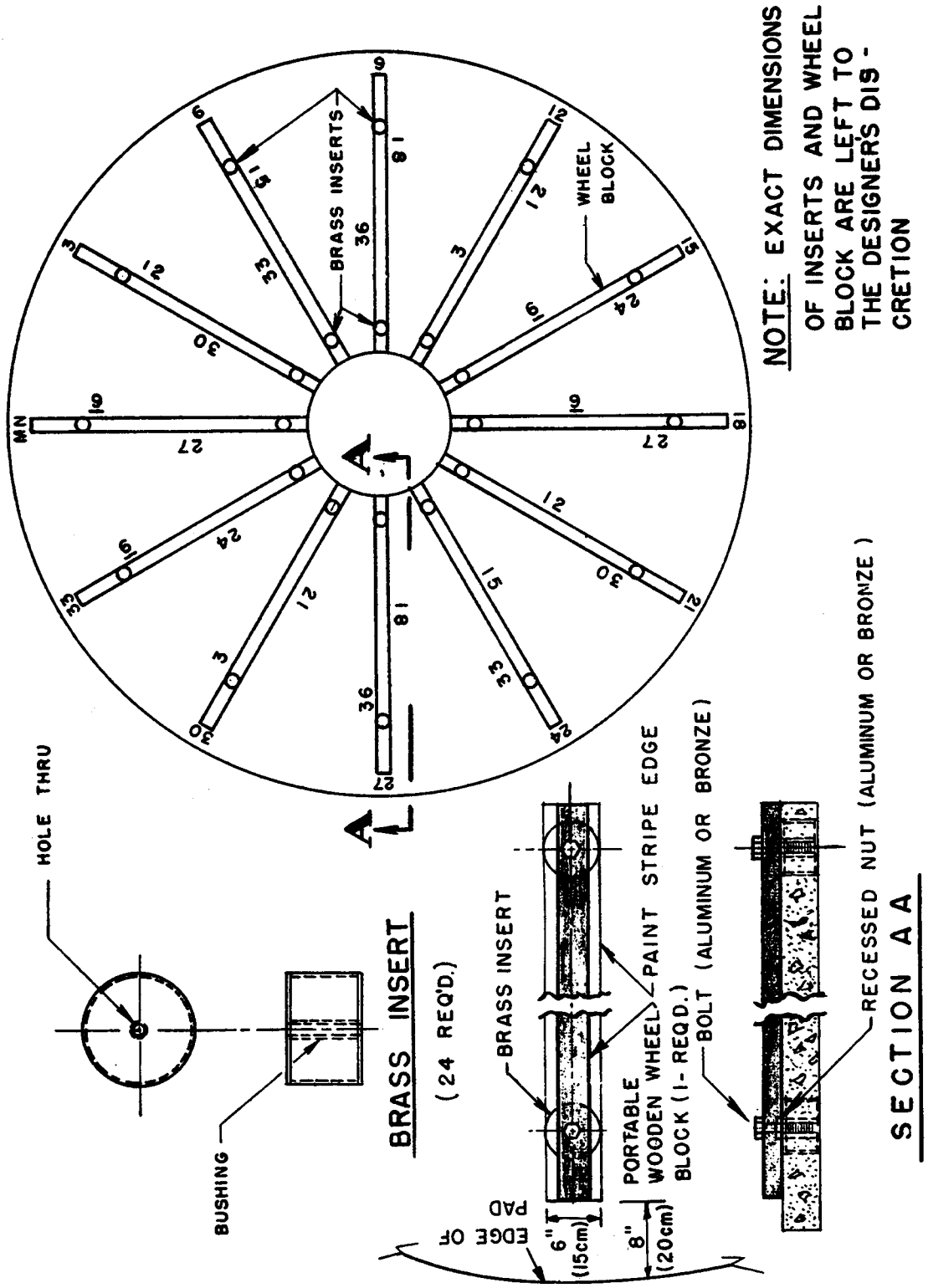

Figure A4-1. Marking layout and details of wheel block

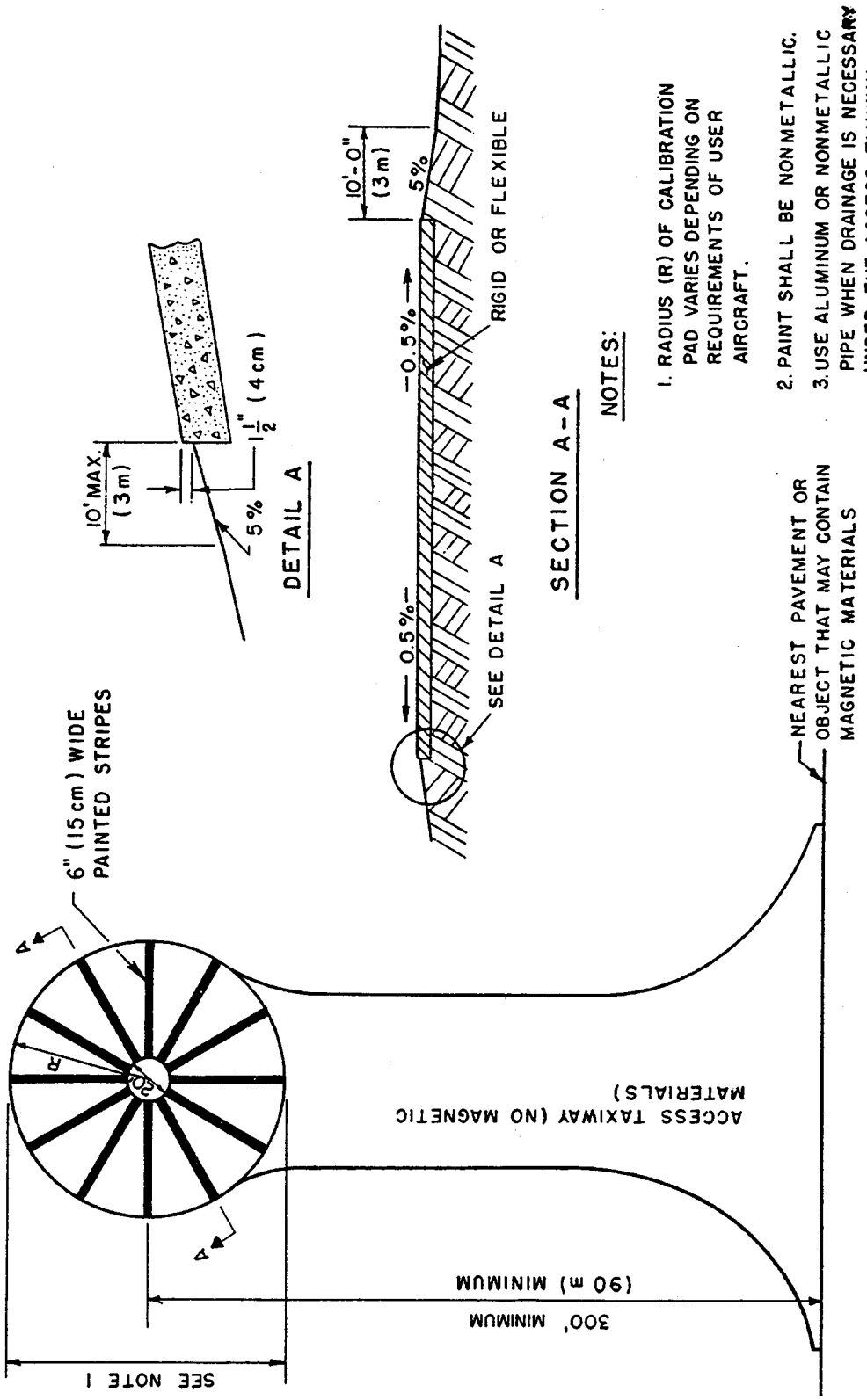

Figure A4-2. Type I. compass calibration pad

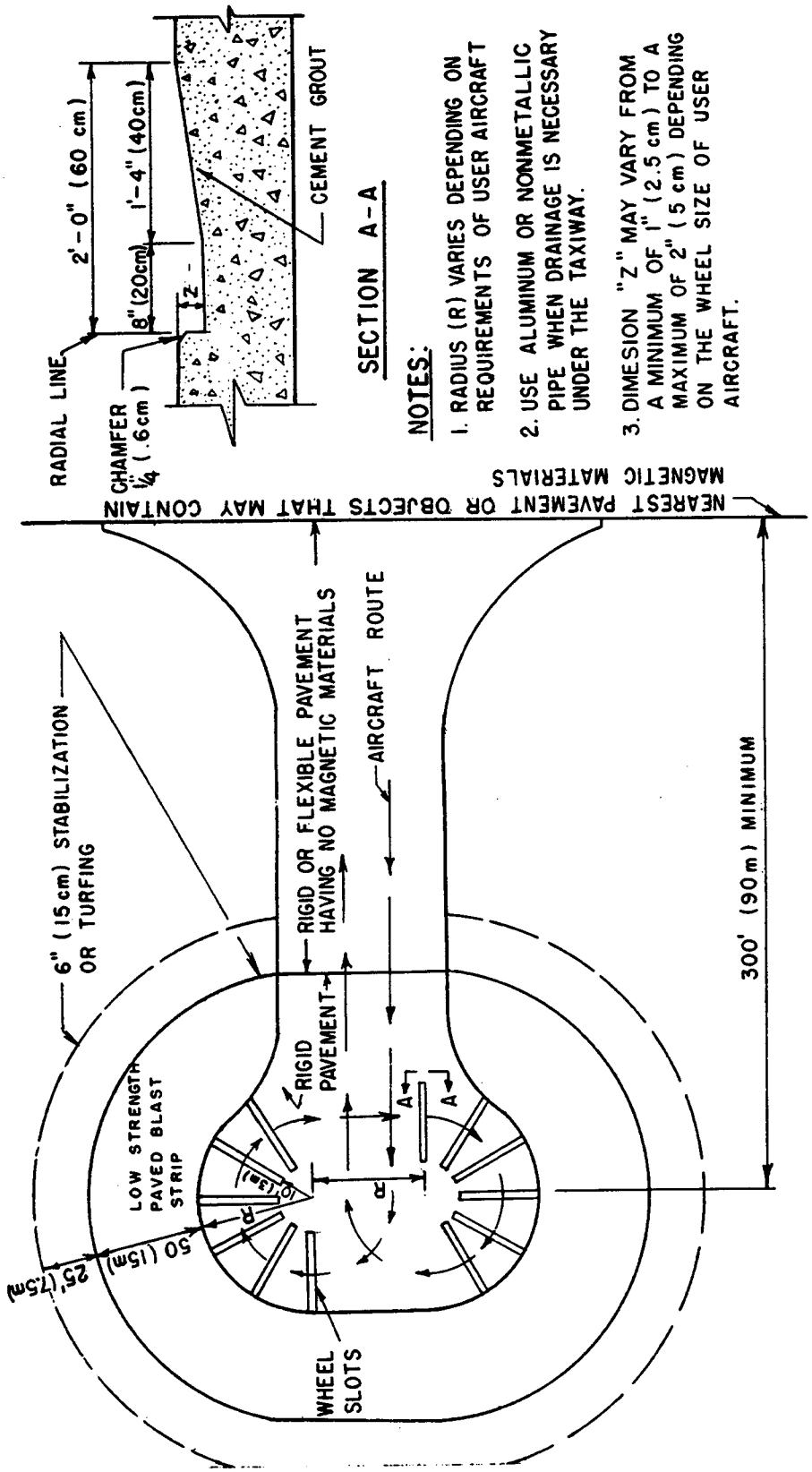

Figure A4-3. Type II. compass calibration pad

Appendix 5. SMALL AIRPORT BUILDINGS, AIRPLANE PARKING, AND TIEDOWNS

1. GENERAL. This chapter provides guidelines on airport buildings, airplane parking, and tiedowns at small airports. Airport buildings fulfill the needs of specific aviation activities. The fixed base operator's (FBO) building usually provides space for the commercial activities, maintenance and repair of aircraft, air charter, and the like. The administration building accommodates the public, pilots, passengers, visitors and also the airport manager's office. Constructed small airplane hangars generally house only airplanes.

a. Figure A5-1 illustrates a typical layout for the building area of a small airport. Siting the FBO building adjacent to the airplane parking apron offers both convenience for local and itinerate pilots. Apron frontage is a premium airport space and should be judiciously utilized. Most hangaring is essentially a garaging operation which usually does not require direct apron front access. The administration building should be near the FBO but sufficiently separated to preclude conflict between airplanes operating from these areas. Storage hangars are often T-hangars, grouped in multiunits in a separate area.

b. Other aviation-oriented buildings may be necessary on the airport. The function(s) of such a building in relation to other aviation activities helps determine its optimum location.

c. An airport master planning study indicates the number of based and transient airplanes expected to utilize the airport. This information will assist in the layout and design of the airplane parking apron(s) and tiedown area(s).

d. AC 150/5360-13 contains guidance on the planning and design of airport terminal buildings and related access facilities at large airports.

2. TRANSIENT APRON. Aprons provide parking for airplanes, access to the terminal facilities, fueling, and surface transportation. A determination on the total amount of apron area needed cannot be developed by formula or empirical relationship since local conditions often vary significantly from one airport to another. The ideal solution is conducting an onsite survey during typical busy days and counting the airplanes on the ground periodically during the day. This approach, however, is impossible for new airports and likely impractical for many airports without a manager. Below is a method which includes factors that affect the determination of the area needed for transient parking and analyzes and estimates the demand for the transient airplane.

a. Calculate the total annual operations (local plus itinerant) from the best available source. Where specific data are not available, the following data, which reflect local plus itinerant operations, may be used: Non-NPIAS Public Use - 538/based aircraft; Reliever - 492/based aircraft; Other General Aviation -637/based aircraft; and Primary - 700/based aircraft.

b. Obtain the record of aviation gas sales for the year for the airport.

c. Correlate gas sales with annual operations on a monthly basis.

d. Calculate the average daily operations for the most active month.

e. Assume the busy day is 10 percent more active than the average day.

f. Assume that a certain portion of the transient airplanes will be on the apron during the busy day. Consider fifty percent as a reasonable figure.

g. Allow an area of 360 square yards per transient airplane.

h. Adjust the calculated amount to accommodate expansion for at least the next 2-year period. A minimum suggested increase is 10 percent.

3. APRON FOR BASED AIRPLANES. The apron used for based airplanes should be separate from the transient airplanes. The area needed for parking based airplanes should be smaller per airplane than for transient. This is due to knowledge of the specific type of based airplanes and closer clearance allowed between airplanes. The following considerations apply in determining the total apron area required for based airplanes:

a. The total number of based airplanes.

b. The number of airplanes now hangared or expected to be within 2 years.

c. The number of airplane owners who will continue to tie down their airplane in a turfed (unpaved) area. At many general aviation airports a certain percentage of airplane owners will prefer to tie down in the most inexpensive area.

d. An area of 300 square yards (250 m^2) per airplane. This should be adequate for all single engine and light twin engine airplanes, such as the Cessna 310, which has a wingspan of 37 feet (11 m) and a length of 27 feet (8 m).

e. An increase in total area to accommodate expansion for at least the next 2-year period. A minimum suggested increase is 10 percent.

4. TIEDOWNS. Tiedown locations for based airplanes will vary with local preference. The purpose of a tiedown layout is to park the maximum number of airplanes while satisfying taxilane object free area width criteria. Figure A5-2 illustrates two tiedown layouts for small airplanes in Airplane Design Group I. General information on tiedown techniques and procedures is contained in AC 20-35.

5. OTHER CONSIDERATIONS.

a. As airport activity increases, the demand for an area to load and unload airplanes will increase. This activity may be in the form of charter, air taxi, business, or personal airplane operations. Generally, the area should be large enough to accommodate two airplanes in front of the terminal building. Also, investigate requirements for possible local air mail service.

b. At small general aviation airports, a gas pump facility is usually the most economical method of airplane fueling. A fueling area should be near the terminal building. Some larger general aviation airports use fuel truck operations. Such an operation eliminates the need for gas pump areas and allows more area for airplane parking. In either case, appropriate static grounding capability must be provided.

c. In summary, the apron design should allow for flexibility and expandability. The design should use empirical relationships only when field data are not available. Arrangement of tiedown installation should allow apron area alterations as needed. Keeping both ends of the apron free of structures will enhance future expansion.

6. HANGARS. Figure A5-3 illustrates typical layouts of hangar areas for different types of hangars. As noted, the recommended clearance between T-hangars is 75 feet (23 m) for one-way traffic and 125 feet (38 m) for two-way traffic. These clearances will accommodate most twin engine general aviation airplanes.

a. Prefabricated T-hangars are available in various sizes and lengths. Details on their erection and cost may be obtained from any of several manufacturers throughout the country.

b. The number of T-hangars depends upon local demand. However, expect a greater demand for protection from weather in the more severe climate areas.

7. ADMINISTRATION BUILDING. The necessity of an administration building is a managerial question answered on the weight of at least the following two factors. First, operationally, the chief factor is whether the airport can take care of present and anticipated airplane activity. Second, economically, the chief factor is the kind of community the airport serves and how well this community can support general aviation activity. Note that lower activity airports may not initially justify the construction of either an FBO or administration building. In many cases, the initial airport building is a small maintenance hangar with an attached office. Prior to the construction of an administrative type of building on a general aviation airport, the following basic questions should receive consideration:

a. Are there a minimum of 10 airplane departures and arrivals, not including touch and go, during the peak hours of a typically busy day during the year?

b. Is there at least one active fixed base operator on the airport?

c. Is airplane fuel available on the airport?

d. Is a hangar with repair facilities in operation on the airport?

e. Is a full-time airport manager on duty during the normal day?

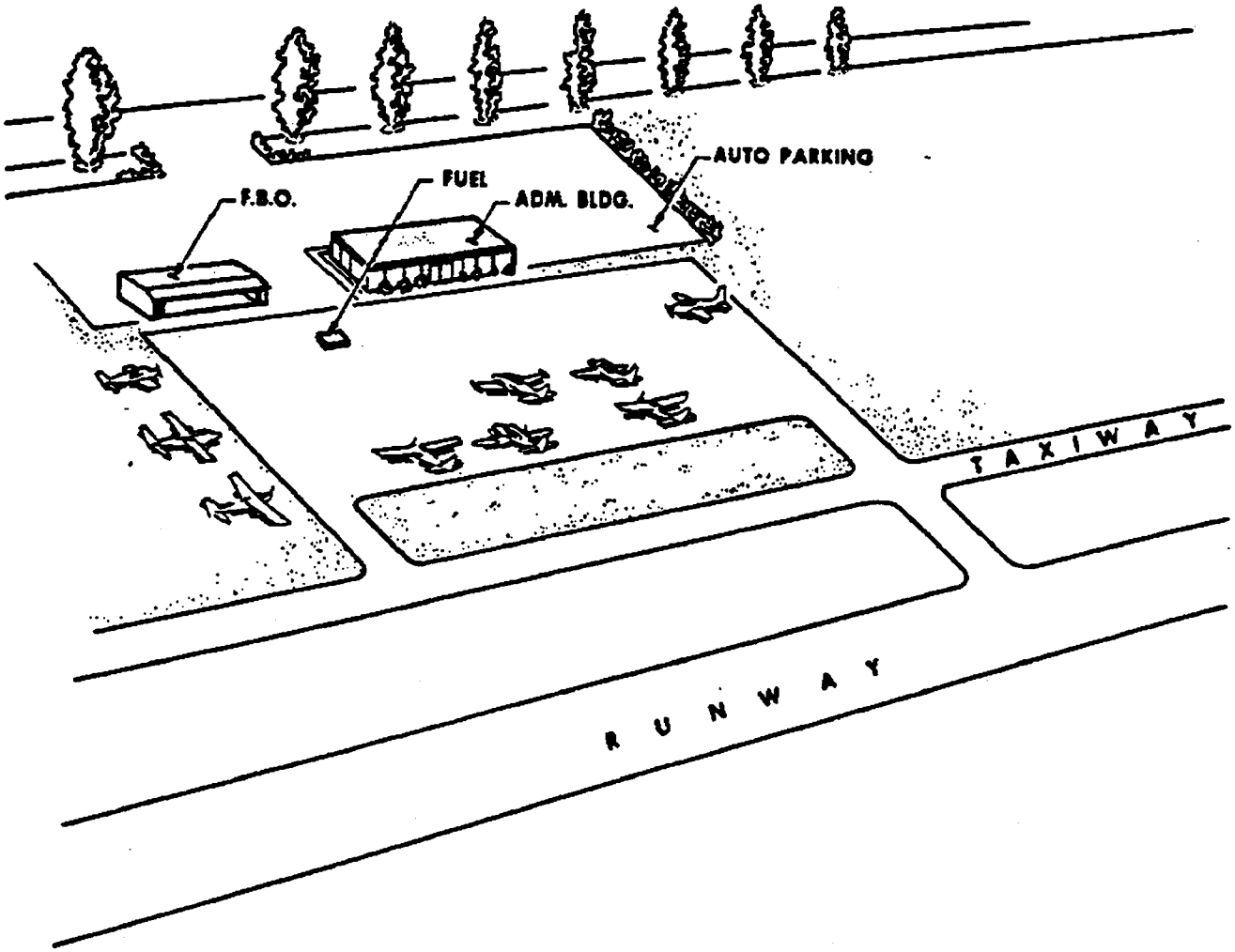

Figure A5-1. Parking apron area

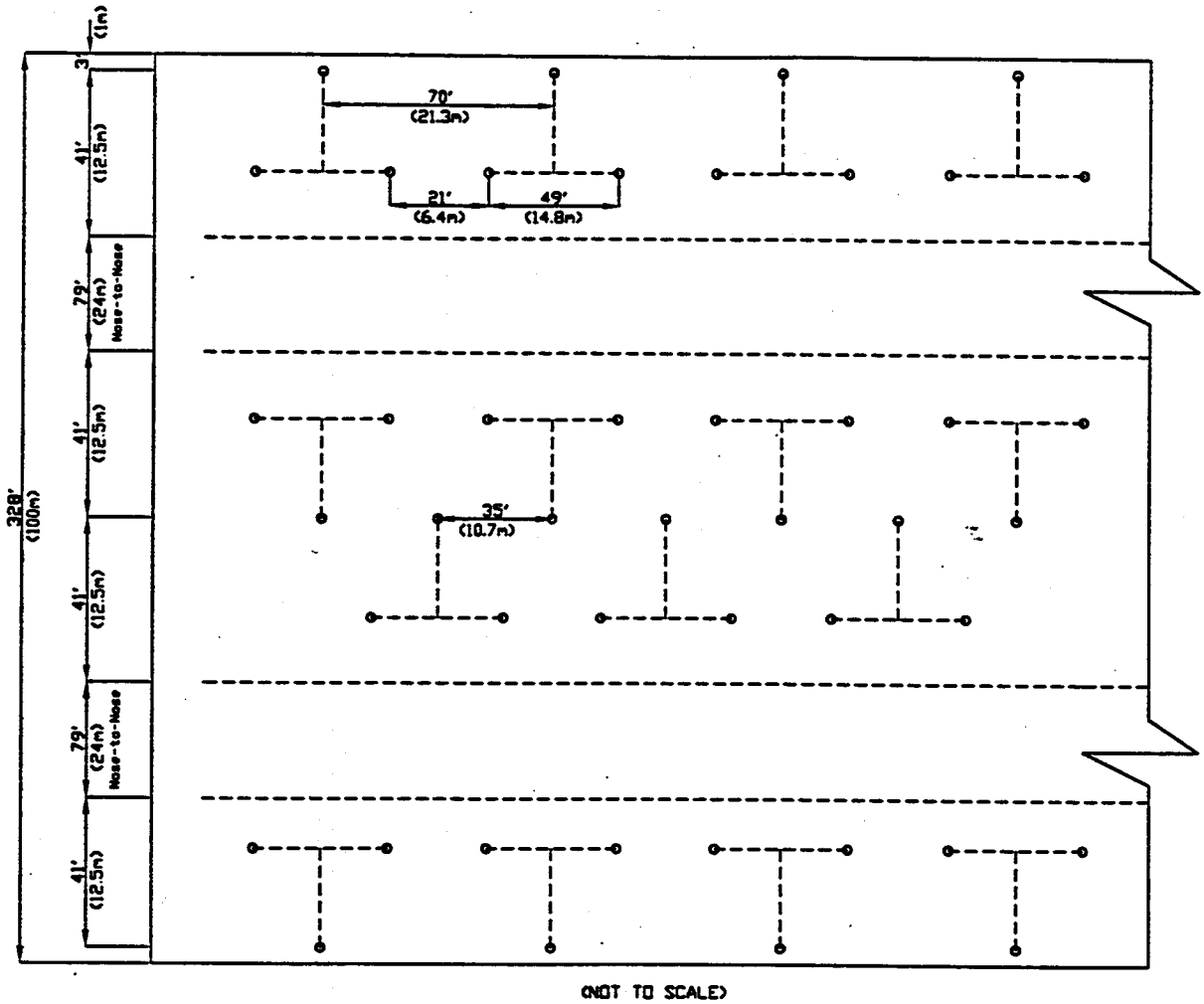

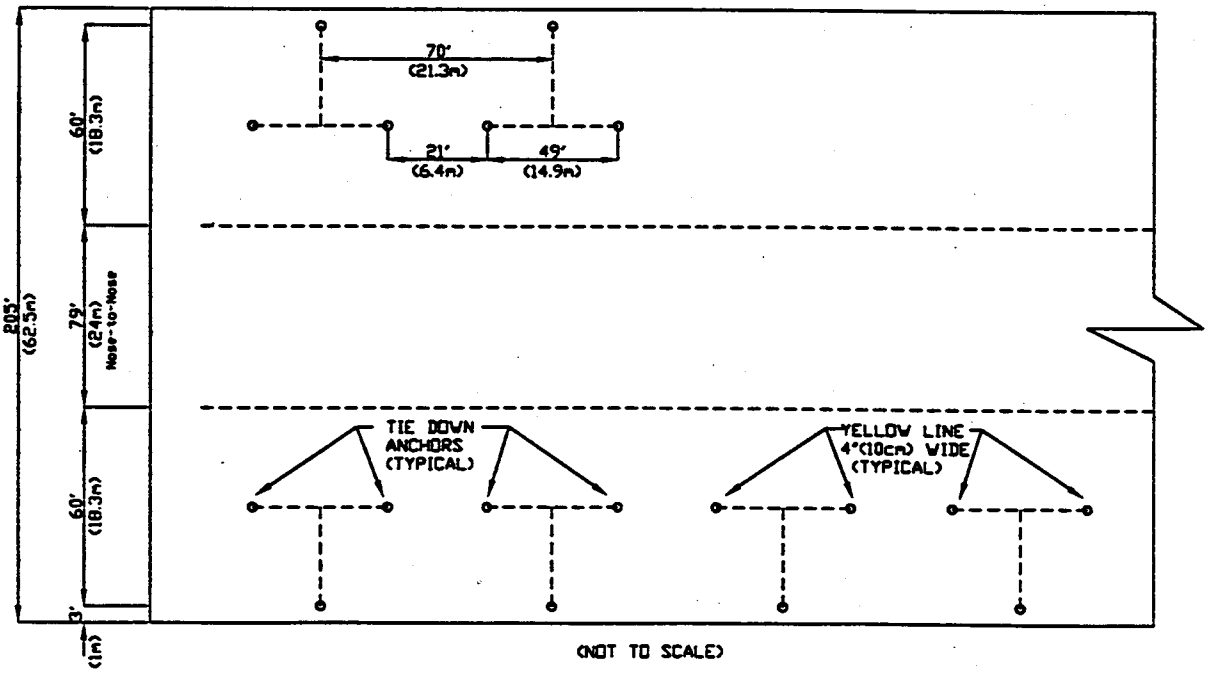

Figure A5-2. Tiedown layouts

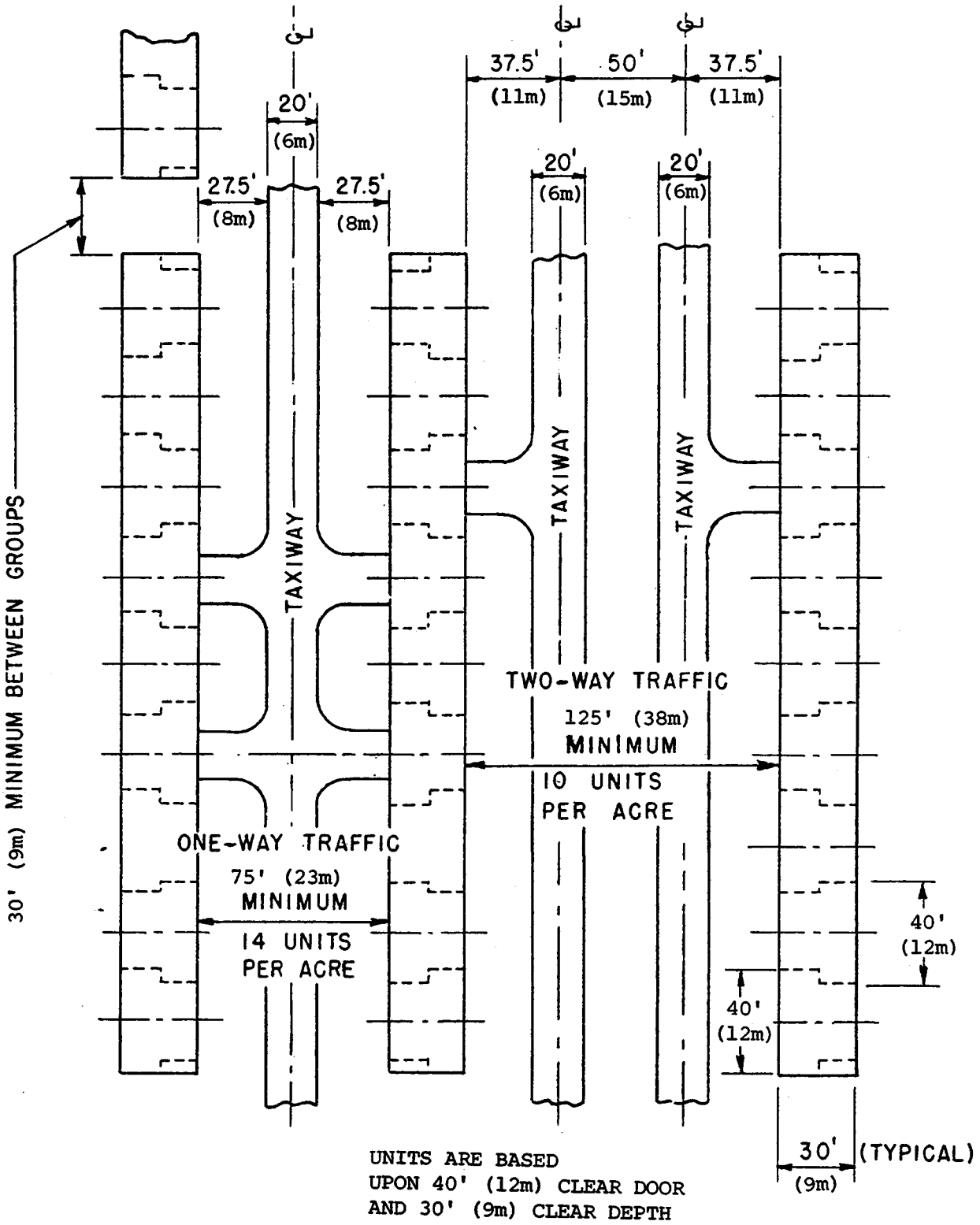

Figure A5-3. T-hanger layout

f. Are public waiting areas and restrooms already available in hangars or other buildings on the airport?

g. Is a public telephone available 24 hours a day for closing flight plans or requesting fuel or transportation to town?

8. AIRPORT SURVEY. A survey of an airport's aviation activity should precede the planning of an administration building. For survey purpose, "airport aviation activity" includes the number of active-based airplanes, the number of airplane operations (local and itinerant), and the number of pilots and passengers at the airport on a typically busy day.

a. A survey of current activity at the airport can determine what functional requirements need accommodating by and the total area of the administration building. Also surveys of other airports with similar aviation activity characteristics which already have administration buildings provide additional valuable data. The airport manager or a fixed base operator can gather the information on several typically busy days over a period of several weeks during the most active season. At many small airports, weekends are usually the busiest days and are a good time to measure peak activity. A Pilots Register is also useful in making a traffic count.

b. With respect to passengers, an airport manager obtains data on the two or three days in the week of the season historically known to be the busiest. This record of the plateau of high activity in terms of peak-hour operations and peak-hour passengers determines the typically busy hour by averaging the hourly activity for three or four of the busiest hours.

9. BUILDING PLAN. The specialized interior requirements of a small administration building are few and should reflect a basic simplicity by providing direct functional relationships between rooms and facilities.

a. The arrangement of elements within the building should address the airfield configuration, future building expansion, and the passenger and service driveways. In determining the details of space relations and requirements, the experienced general aviation airport manager is in the best position to assist in tailoring detailed building needs to actual aviation activity and should be a participant in the early planning conferences.

b. The building components should provide:

(1) Short and direct pedestrian routes from parking areas to public waiting areas or airport offices, and to the loading apron or tiedown areas; and

(2) A view of the airfield operations from the manager's office, the waiting room, and any eating facilities.

10. EXPANSION.

a. Identification of future expansion of the administration building should be from the outset. This is particularly important at a general aviation airport where it is difficult to accurately forecast and assess initial construction cost when based on actual measurable activity.

b. Normally, with the air field side of the building fixed, building expansion occurs only on the off-field side and the ends. When drives and walks resist expansion on the off-field side, all major expansion should proceed on the ends of the building.

11. CIRCULATION. The waiting room is the hub from which circulation routes radiate. Usually, an open plan with only the minimum essential partitioning allows better circulation and a more spacious building interior. The following items are important in assuring a satisfactory circulation of traffic through the building:

a. Short and direct routes from the entrance of the off-field side of the building to the exit on the field side.

b. Wide doorways at the main entry and exits.

c. Public corridors, as necessary, wide enough for comfortable traffic flow, but not excessive to raise initial and maintenance costs.

d. Adequate circulation aisles within the waiting area to assure free movement and comfort for the room occupants.

12. WAITING ROOM. As the central meeting and waiting space for passengers, visitors, pilots, and airport employees, the waiting room is the focal point of the building. It should merge with such other required spaces as the manager's office, eating facilities, and public restrooms. The closer this relationship, the more economical the building. Additional recommendations follow:

a. A view of airfield activities. The public enjoys seeing airplanes and their operations. Do not put utility rooms, restrooms, and other service facilities on the field side of the building if possible.

b. A comfortable seating arrangement. Comfortable seating need not be fixed seats or stereotyped. Such an arrangement at a small airport is especially good to promote the waiting room informality usually associated with small airport operations.

c. Concession items such as coin-operated parcel lockers and small item dispensing machines.

d. A bulletin board for information of interest to private pilots and the aviation public; for example, weather reports, notices to airmen, and FAA information.

e. Space for the mounting of aeronautical charts.

f. A folding partition to provide dual space use. This flexible arrangement conserves building space and makes it possible to hold meetings in the administration building without disturbing the essential business routine.

g. A public phone for closing flight plans, weather briefings, calling public transportation, etc.

13. MANAGER'S OFFICE. Expect variation in the room space for management use at a particular airport. Determining the local management's space requirements should follow after an analysis of the management equipment, furnishings, and personnel space needs. As a general planning guide, the minimum office size sufficient for the furnishings and functions of an office for a manager and one secretary should be about 180 square feet (17 m^2).

14. EATING FACILITIES. Normally, some provision for food services is in the administration building for the comfort and convenience of airport users. The scope of the eating facilities in the building varies with local and itinerant aviation activity. There may be dispenser items, a snack bar, a coffee shop, a dining room, or a combination of these. Frequently, the airport eating facility attracts additional patrons because of its convenient location, its unusual cuisine, or the interest which the patrons have in aviation activity.

a. Food and drink dispensers are usually enough to satisfy initial needs at general aviation airports. Dispenser service requires little attention to operate. Grouped dispensers can better be seen from the main circulation route between the waiting area and the operation/management office.

b. Usually a concessionaire operates the coffee shop or dining room service. It is important to select the concessionaire early enough to receive concessionaire input in planning that part of the administration building. Computing the required size of space should proceed in terms of seated patrons and the kind and amount of food service and preparation equipment. Additional recommended planning considerations are:

(1) Direct relation with the waiting room;

(2) Convenient route from public entrances;

(3) Direct access from the food preparation area to the outside service drive;

(4) View of the airfield activity from the seating area; and

(5) Compliance with public health agency requirements.

15. PUBLIC RESTROOMS. Restrooms should be immediately accessible from the waiting room and meet federal, state, and local requirements for the handicap impaired.

16. ROADS AND AUTO PARKING. Establishing roads and parking areas directly related to the administration building should follow after arranging the configuration of the building, including passenger entrances/exits and service entries. Other important considerations are as follows:

a. Location of short-limit parking or stopping spaces should be close to the main off-field public entrance with enough distance left between building and parking spaces for any future building expansion planned toward these parking spaces.

b. Consolidation of public and employee parking spaces should be into one centrally located parking area when both an administration building and a hangar area are contemplated. This plan is feasible when a convenient relation is established from the

outset between the administration building and the hangars.

c. For special events, there should be one or more well-drained turfed areas, located beside the airport access roads for overflow parking.

d. Additional parking areas should exist if the administration building contains eating facilities which outside customers regularly patronized.

e. There should be separate service drives for kitchens from public drives and parking. However, the service drive may often be adjacent to the apron access drive. This requires preventive measures to prohibit restaurant vehicles from inadvertently driving onto the apron.

f. Designated parking spaces for the handicap impaired are required to comply with applicable federal, state, and local requirements

Appendix 6. METRIC CONVERSION AND TYPICAL AIRPORT LAYOUT PLAN

1. GENERAL. The intent of this appendix is to discuss metric conversion and to present concepts that go beyond simple conversion or the mathematical manipulation of values.

a. Policy. Public Law 94-168, Metric Conversion Act of 1975, declares a national policy of coordinating the increasing use of the metric system in the United States. The metric system of measurement is interpreted to mean the SI units as established by the General Conference of Weights and Measures in 1960. The transition to the metric system is to be voluntary and evolutionary with industry setting the pace. This means that the airport authority has the option to design the airport in either the U.S. customary or SI units. In keeping with the spirit of this policy, it is the intent of this chapter to provide metric transition guidance to those architects, engineers, and planners whose responsibility is to develop airport layout plans.

b. State of the Art.

(1) At the present time, much of the conversion practice as seen in trade literature is limited to a dual system with equivalent units being expressed in parentheses. Firms in foreign practice have developed an expertise in working in the metric system.

(2) Numerous conversion tables are available for simple conversion of values; however, in order to carry the transition to its logical conclusion, we should become acquainted with such subjects as SI style, usage, accuracy, and rounding techniques. For a more comprehensive discussion of the SI system, American Society for Testing and Materials, ASTM E 380 Standard for Metric Practice, and the Metric Manual, U.S. Department of the Interior, Bureau of Reclamation, are recommended references for engineers.

(3) Development of airport layout plans and other drawings can be in three ways:

(a) SI units only.

(b) U.S. customary units only.

(c) A combination of both systems.

The development of two sets of drawings fulfills various requirements of bidding and construction. This practice is a duplication of effort, but it may be economically justified under some circumstances when it is necessary to work in a medium in which people are familiar. Dual units can be on the same drawing; however, this practice leads to clutter, confusion, and errors by using customary units for SI units and vice versa.

c. The Hard Conversion Concept. Hard conversion is a new dimension judged to be a preferred or rationalized SI value. This new dimension is a change in the item's properties and will eventually result in international standardization of products and dimensions. Hard conversion has met with resistance to change because of presumed economical impact associated with change in dimension and modification of equipment. The FAA recommends the use of the hard conversion concept to the maximum extent practicable.

d. The Exact Conversion Concept. Exact conversion as the name implies relates to a type of conversion that results in a high degree of precision that may usually be associated with legal, scientific, or statistical applications rather than in the development of an airport layout plan. Airport design requires exact conversion at all interfaces between items designed under different systems of units.

e. The Soft Conversion Concept. Soft conversion results in essentially rounding of the converted value to the nearest integer or sensible number. The item or construction remains unaltered because the conversion is really nothing more than an interim form of conversion, rather than the creation of a dimensionally new component. This type of conversion may be used when the metric standard is not available.

f. Rounding of Converted Value. The recommended approach to rationalized dimensions is the following:

DIMENSIONAL CLASSIFICATION

Order of pref.	Very small dimensions up to about 50 mm	Small dimensions up to about 300 mm	Medium dimensions up to about 6000 mm	Large dimensions site layouts roadworks	Other numerical values	
					Range 1 to 100	Range 100 to 1000
1st	10 mm	100 mm	600 mm	10 m	10	100
2nd	5 mm	50 mm	300 mm	5 m	5	50
3rd	2 mm	25 mm	100 mm	1 m	2	20
4th	1 mm	10 mm	50 mm	.5 m	1	10
5th		5 mm	25 mm	.1 m		
6th		2 mm	10 mm			
7th		1 mm				

These values should be applied to achieve a reasonable balance between the smallest percent error and the highest order of preference.

2. TYPICAL AIRPORT LAYOUT PLAN.

a. Introduction. The typical airport layout plan, figure A6-1, depicting a small airport.

b. Drawing Scales. Selection is basically a matter of choice; however, one should choose a scale that is easy to work with and that will enable appropriate details to be shown conveniently. The following list is a suggested reference:

Type of map	U.S. customary system		Metric system	
	(Inches) (Feet)	Unit ratio	(cm) (m)	Unit ratio
Location	1 - 2,000	1:24,000	1 - 250	1:25,000
Vicinity	1 - 4,000	1:48,000	1 - 500	1:50,000
Airport layout plan	1 - 200 to 1 - 600	1:2,400 to 1:7,200	1 - 25 to 1 - 500	1:2,500 to 1:5,000

c. Contours.

(1) One requirement of the airport layout plan is to indicate surface grades by contours so that drainage can be assured and obstructions identified. Contour intervals should be chosen such that they adequately show the important features and changes in ground elevation. On relatively level terrain, the contour interval should be 1 foot. The contour lines, however, should not be so numerous or pronounced that they clutter the drawing or overpower the other details.

(2) A topographic survey is one method of determining the existing elevations and physical features of an area to be developed. This survey can be run independently or in conjunction with a property line survey. Because of the transitional climate that exists at this time and because of the compatibility with available equipment and existing land records, land surveyors are still practicing in customary units. This does not mean that data taken in the customary system cannot be transformed and presented in metric units if required or requested.

(3) U.S. Geological Survey topographic maps show existing contours. All new U.S. Geological Survey topographic maps are being developed in the metric system, except in those states that have not been completed and have optioned for completing the balance of their contracts in the customary system. Puerto Rico is mapped in the 1:20,000 metric scale, 7.5 X 15 minute format. In those localities where a metric topographical map exists, there will be no

problem developing metric contours; but in those areas where a metric map does not exist, some form of conversion will be necessary to work from available 1:24,000-scale topographical maps.

(4) It is recommended that elevations be shown in meters, with the number of decimal places used to be a function of the precision required. For example, elevations for earthwork and excavations will be shown to two decimal places, while concrete and steel work will be shown to three places.

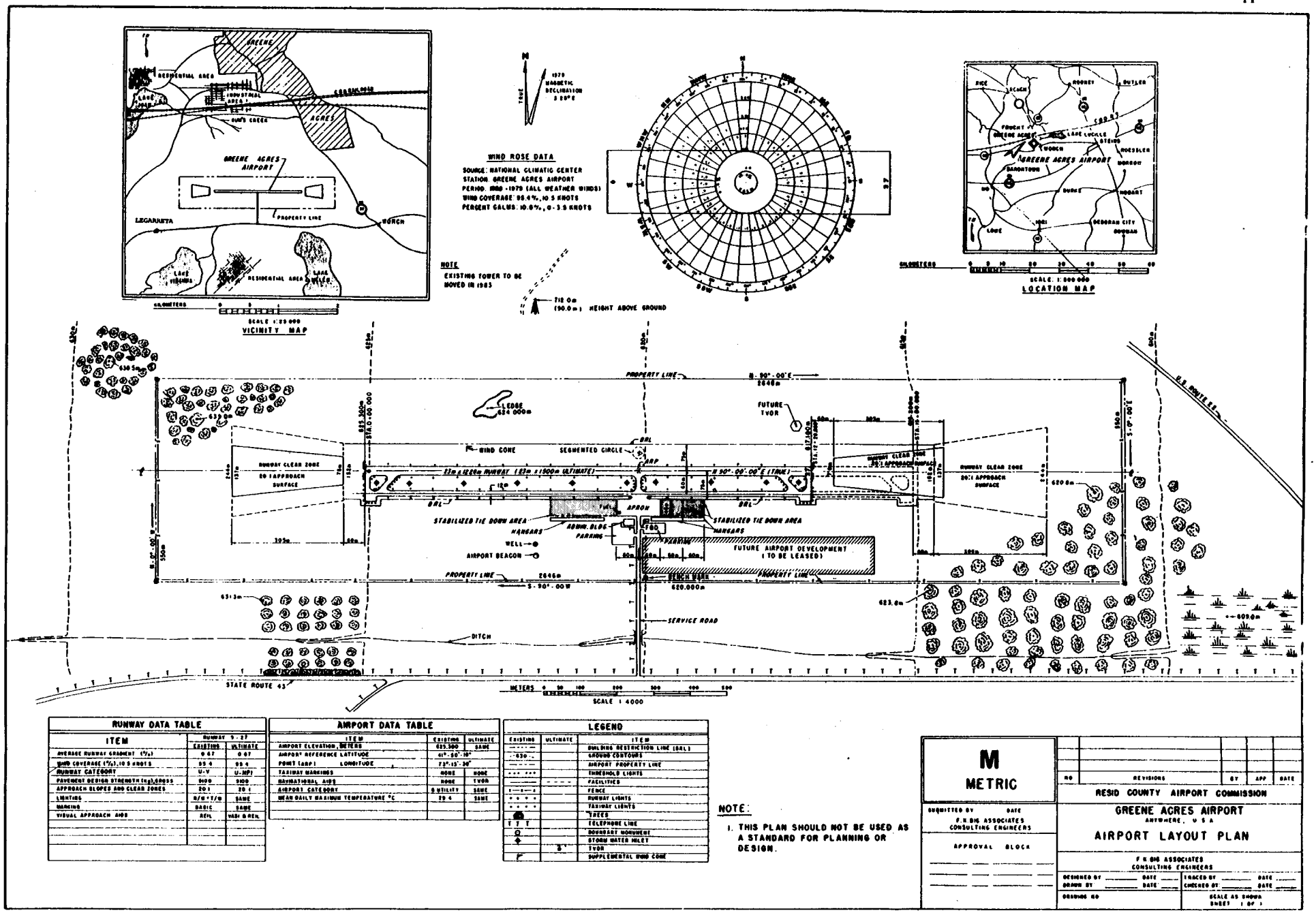

Figure A6-1. Typical airport layout plan

Appendix 7. AIRPORT LAYOUT PLAN COMPONENTS AND PREPARATION

AIRPORT LAYOUT PLAN COMPONENTS

1. Narrative Report
2. Airport Layout Drawing
3. Airport Airspace Drawing
4. Inner Portion of the Approach Surface Drawing
5. Terminal Area Drawing
6. Land Use Drawing
7. Airport Property Map

AIRPORT LAYOUT PLAN (ALP) PREPARATION

1. NARRATIVE REPORT.

a. Definition - A condensed report explaining the reasoning behind, and important features of the ALP. The narrative report, in preliminary format, should accompany the first submission of a preliminary ALP for agency and sponsor review. (When Airport Layout Plan preparation is being accomplished in conjunction with a Master Plan Study, the Master Plan Report will contain this information so that a separate ALP Narrative Report is normally not needed.)

b. Includes:

(1) Basic aeronautical forecasts.

(2) Basis for proposed items of development.

(3) Rationale for unusual design features and/or modification to FAA Airport Design Standards.

(4) Development summary for stages of construction and layout sketches depicting the main items of development in that stage.

c. Preparation Guidelines:

(1) Forecasts - Extent depends on airport size and use. As a minimum, include 0-5, 6-10, 11-20 year forecasts for:

(a) Total annual operations.

(b) Annual itinerant operations (all aircraft).

(c) Based aircraft.

(d) Annual instrument approaches.

(e) Annual itinerant operations by current **design aircraft**.

(f) Annual itinerant operations by future more demanding airplane.

(2) Stage Development - Summarize major developments for three stages (0-5, 6-10, and 11-20 year), and depict these stages on sketches.

(3) Coordination - Obtain and append to the Report evidence that the ALP was coordinated with appropriate local and state governmental units (e.g., City or Metropolitan Planning Agency, County Board of Supervisors, State Highway Department, Utility Companies, etc.), and found to be consistent with their plans.

(4) Other - Remember the primary purpose of the narrative report is to provide useful and understandable information and guidance to the airport sponsor. It also provides the FAA with important information needed to review and ultimately approve the ALP.

2. AIRPORT LAYOUT DRAWING.

a. Features:

(1) Layout of existing and proposed facilities and features.

(2) Wind rose and coverage analysis.

(3) Basic airport and runway data tables.

(4) Legend and building tables.

(5) Title and revision blocks.

(6) Sponsor approval block.

(7) List of approved modifications to FAA Airport Design Standards, including proposed and planned modifications to standards, such as the use of declared distances for airport design, expected to be approved as part of the ALP review and approval process.

b. Preparation Guidelines:

(1) Sheet size - 22" x 34".

(2) Scale - Determined by airport size. Stay within range of 1" = 200' to 1" = 600' (1:2 000 to 1:8 000).

(3) North Point - Indicate both True and Magnetic North and the year of the magnetic declination used. Orient drawing so that north is to the top of sheet. If this is not practicable, orient north so that it is to the left.

(4) Wind Rose

(a) Cite data source (i.e., weather station) and time period covered.

(b) Include individual and combined coverage for:

1) Runways with 10.5 knots crosswind.

2) Runways with 13 knots crosswind.

3) Runways with 16 knots crosswind.

4) Runways with 20 knots crosswind.

(5) Airport Reference Point (ARP) - Show location based on ultimate airport configuration with latitude and longitude to the nearest second based on NAD 83.

(6) Topographic Information - Show ground contours at intervals of 2 feet to 10 feet (1 m to 5 m) depending on terrain. Draw in with very light lines.

(7) Elevations: Include the following:

(a) Runway - at existing and ultimate ends, displaced thresholds, touchdown zones, intersections, high and low points - accuracy to the nearest 1/10 of a foot (1 cm) where the elevation is not subject to change with time.

(b) Structures on Airport - If Terminal Area Plan Drawing is not to be included, show top elevations on this sheet. Use table and numbering system.

(8) Building Restriction Lines - Show on both sides of runways and extend to airport property line or RPZ. Also, use to restrict buildings from "runway visibility zones."

(9) Runway Details - Include the following:

(a) Approach Visibility Minimums - Include designated or planned approach visibility minimums (V, 1 MILE, 3/4 MILE, 1/2 MILE, CAT II, or CAT III) in the Runway Data Table.

(b) Dimensions - Note length and width (for existing and ultimate) within outline of runway. Include the runway length in the Runway Data Table.

(c) Pavement Design Strength - Include pavement design strength in the Runway Data Table.

(d) Orientation - Depict runway end numbers and show true bearing - accuracy to nearest 0.01 degree.

(e) Lighting - Depict existing and ultimate threshold lights with symbols. Show type of lighting (MIRL, etc.) in Runway Data Table. Don't depict runway edge lights on drawing.

(f) Marking - Include the type of runway markings (V, NP, or P) in the Runway Data Table.

(g) Stage Lengths - Show only existing and ultimate. (Depict interim stage lengths on stage development sketches in ALP Narrative Report.)

(h) End Coordinates - Note end (existing and ultimate) of each runway - accuracy to nearest 0.01 second.

(i) Monuments - Depict the location of all survey monuments and reference markers. As a minimum, monuments should be established to locate the runway centerline at the runway ends and at displaced thresholds. Include a note describing the manner in which these monuments are protected.

(j) Declared Distances - Identify any clearway/stopway portions in the declared distances and any runway portions not included in the declared distances. Include all declared distances for all runway directions in the Runway Data Table. Declared distances associated with each runway direction may also be shown on the drawing (refer to appendix 14).

(10) Object Free Areas (OFA) - Include the existing and ultimate OFA dimensions in the Runway Data Table as OFA width and length of OFA beyond the stop end of runway and/or depict the OFA on drawing with dimensions.

(11) Safety Areas (RSA) - Include the existing and ultimate RSA dimensions in the Runway Data Table as RSA width and RSA length beyond the stop end of runway and/or depict the RSA on drawing with dimensions.

(12) OFZ Details - Specify "NO OFZ OBJECT PENETRATIONS" when no object other than frangible NAVAIDS penetrates the OFZ. Otherwise show the object penetrations and indicate how they will be eliminated. The OFZ may be depicted on the drawing with dimensions to facilitate identifying object penetrations. Refer to paragraph 306 for the location, configuration, and dimensions of the OFZ.

(13) Threshold Details - Depict the thresholds with coordinates - accuracy to nearest 0.01 second, elevation, displacement from runway end, and print "NO THRESHOLD SITING SURFACE OBJECT PENETRATIONS" when no object penetrates the threshold siting surface. Otherwise show the object penetrations and indicate how they will be eliminated. The threshold siting surface may be depicted on the drawing with dimensions to facilitate identifying object penetrations. Refer to appendix 2, paragraph 5 for the location, configuration, and dimensions of the threshold siting surface.

(14) RPZ Details

(a) Size - Dependent on operational use (refer to chapter 2). Indicate existing and ultimate sizes on drawing either with note or dimensions.

(b) Property acquisition - Indicate type (fee or easement) with appropriate legend symbol. NOTE: Boundary of existing property interest may, or may not, coincide with current RPZ boundary.

(c) Residences and Places of Public Assembly - Show residences and places of public assembly and how they will be removed on the drawing.

(15) Holding Position Signs and Markings - Depict the holding position signs and markings distance from runway centerline. Use dimension lines.

(16) Taxiway Details - Include the following:

(a) Dimensions - Show widths and separations from runway centerline, parallel taxiway, aircraft parking, and objects. Use dimension lines.

(b) Lighting and marking - Indicate by notes in Airport Data Table (refer to figure A6-1).

(17) Airport Data Table - As per example in figure A6-1.

(18) Runway Data Table - As per example in figure A6-1.

(19) Legend Table - As per example in figure A6-1.

(20) Building Table - Identify existing and proposed structures by number and include a description of the structure. When appropriate, expand to include a column for the top building elevations if a Terminal Area Drawing is not included.

(21) Location and Vicinity Maps - These are optional.

(22) Title and Revision Blocks - Refer to example in figure A6-1.

(23) Approval Block - Include one for only the airport sponsor. (Submission of final ALPs for FAA approval must reflect sponsor approval of the Plan).

3. AIRPORT AIRSPACE DRAWING.

a. Includes:

(1) Plan view of all 14 CFR Part 77 Subpart C surfaces based on ultimate runway lengths.

(2) Small scale profile views of ultimate Part 77 Subpart C approaches.

(3) Obstruction Data Tables, as appropriate (refer to inner portion of the approach surface discussion).

b. Preparation Guidelines:

(1) Sheet size - same as Airport Layout drawing.

(2) Scale - 1" = 2000' (1:20 000) recommended for the plan view. 1" = 1000' (1:10 000) (horizontal) and 1" = 100' (1:1 000) (vertical) for approach profiles.

(3) Title and Revision Blocks - As per example in Chapter 9 of AC 150/5070-6.

(4) Plan View Details

(a) Use current USGS 7 1/2 minute Quad. for base map when available.

(b) Show runway end numbers.

(c) Include 50-foot (20 m) elevation contours on all sloping surfaces.

(d) When horizontal and/or conical surfaces overlap the approach surface, draw in the more demanding surfaces with solid lines and the others with dashed lines.

(e) Identify objects, and note top elevations thereof, which penetrate any of the surfaces, except those which are within the inner portion of the approach surfaces. For the latter, add note, "Refer to the inner portion of the approach surface plan view details for close-in obstructions."

(f) For precision instrument runways (i.e., approaches 50,000 feet (15 000 m) in length), use a cut line and show the balance of 40,000 feet (12 000 m) approach on a separate sheet.

(g) Include a note specifying any height restriction zoning ordinances/statutes in the airport environs.

(h) Other - Refer to example drawing in Chapter 9 of AC 150/5070-6.

(5) Approach Profile Details

(a) Depict the ground profile along the extended runway centerline representing the composite profile based on the highest terrain across the width and along the length of the approach surface.

(b) Depict all significant objects within the approach surfaces regardless of whether they are obstructions (e.g., roadways, rivers, bluffs, towers, etc.). Note top elevation of all significant objects.

(c) Show existing and ultimate runway ends and Part 77 Subpart C approach slopes.

4. INNER PORTION OF THE APPROACH SURFACE DRAWING.

a. Includes:

(1) For each runway end, a large scale plan view of the inner portion of the approach, usually limited to the area out to where the Part 77 Subpart C approach surface reaches a 100-foot (30 m) height above the runway end.

(2) Projected profile views of Item 1 above.

(3) Obstruction Tables.

b. Preparation Guidelines:

(1) Sheet size - same as other.

(2) Scale - Horizontal 1" = 200' (1:2 000) Vertical 1" = 20' (1:200).

(3) Title and Revision Blocks - Same as for Airport Layout Drawing.

(4) Plan View Details

(a) Use aerial photos for base maps when available.

(b) Use numbering system to identify obstructions.

(c) Depict property line when it is located within the area.

(d) When traverse ways (roads, railroads, waterways, etc.) cross the area beneath the approach surface, show the traverse way elevation and vertical clearance between the traverse way and the approach surface at the approach surface edges and extended runway centerline. Also, number these points for subsequent use on the profile drawings.

(e) Depict existing and ultimate end of runway. Note runway end number.

(f) Show ground contours (with light line) within the area.

(5) Profile View Details

(a) Depict terrain along runway safety area and significant items such as fences, stream beds, roadways, etc., regardless of whether the items are obstructions.

(b) Identify obstructions with numbers used on plan view.

(c) Depict cross-section of roads and railroads with dashed lines where they intersect outer edges of approach surface.

(6) Obstruction Table Details

(a) Prepare separate table for each approach surface and specify type and slope of the Part 77 approach surface.

(b) Provide columns for obstruction identification number and description, the amount of approach surface penetration, and the proposed disposition of the obstructions, including no action.

5. TERMINAL AREA DRAWING.

(The need for this drawing will be decided on a case-by-case basis. For small airports, where the Airport Layout Drawing is prepared to a fairly large scale, a separate drawing for the terminal area may not be needed.)

a. Includes: Large scale plan view of the area (or areas) where aprons, buildings, hangars, parking lots, etc., are located.

b. Preparation Guidelines:

(1) Sheet Size - Same as Airport Layout Drawing.

(2) Scale - Range of 1" = 50' to 1" = 100' (1:500 to 1:1 000 m).

(3) Title and Revision Block - Same as Airport Layout

(4) Building Data Table - For listing structures and showing pertinent information relative to them. Include space and columns for:

(a) Structure identification number (identify structures on plan view with numbers instead of words).

(b) Top elevation of structures.

(c) Obstruction marking (existing and planned).

(5) Legend - Include symbol for indicating planned removal, abandonment, etc.

6. LAND USE DRAWING.

a. Definition - A drawing depicting existing and recommended use of all land within the ultimate airport property line (on airport) and in the vicinity of the airport (off airport to at least 65 LDN). The land uses should be depicted by general use categories (e.g., agriculture, recreational, industrial, aviation, commercial, etc.).

b. Purpose - This drawing provides the airport management a plan for leasing revenue producing areas on the airport. It also provides guidance for determining allowable proximity of farming operations to runways and taxiways. Factors which need to be considered in the preparation of this plan include line of sight between runway ends and within the "runway visibility zones." Furthermore, the drawing provides guidance to local authorities for establishing appropriate zoning in the vicinity of the airport.

c. Preparation Guidelines:

(1) Sheet Size - Same as Airport Layout Drawing.

(2) Scale - Same as Airport Layout Drawing.

(3) Title and Revision Block - Same as Airport Layout Drawing.

(4) Base Map - Use aerial photos when available.

(5) Legend - Within the various parcels and/or areas on and off the airport, use standard drafting symbols (i.e., shading, cross hatching or other tonal effects) to identify recommended land uses by general category (e.g., agricultural, recreational, industrial, commercial, residential, aeronautical, etc.). Use notes to identify existing land uses by general category.

(6) Public Facilities - Depict the location of all public facilities (e.g., schools, hospitals, prisons, parks, etc.) in the vicinity of the airport.

(7) Drawing Details - Normally limited to existing and future airport features (i.e., runways, taxiways, aprons, runway protection zones, terminal buildings and NAVAIDs). The drawing should be sufficiently detailed to allow the airport management to determine limit lines for areas which must be kept in grass or restricted to low growing crops.

7. AIRPORT PROPERTY MAP.

a. Definition - A drawing indicating how various tracts of land within the airport boundaries were acquired (e.g., Federal funds, surplus property, local funds only, etc.). Easement interests in areas outside the fee property line should also be included.

b. Purpose - The primary purpose of this drawing is to provide information for analyzing the current and future aeronautical use of land acquired with Federal funds.

c. Preparation Guidelines:

(1) Sheet Size - Same as Airport Layout Drawing.

(2) Scale - Same as Airport Layout Drawing.

(3) Title and Revision Block - Same as Airport Layout Drawing.

(4) Legend - Use standard drafting symbols (i.e., shading, cross hatching, or other tonal effects) and legend table to indicate the type of acquisition involved with each tract or area.

(5) Data Table - A data table with a numbering or lettering system should be used to show pertinent data applicable to property acquisitions. As a minimum, the following data should be included:

(a) The date the property was acquired.

(b) The Federal aid project number under which the property was acquired. Like property interests acquired with Federal funds under the same project may be grouped together and shown as one tract or area.

(6) Drawing Details - Normally limited to existing and future airport features (i.e., runways, taxiways, aprons, runway protection zones, terminal buildings and NAVAIDs) which would indicate aeronautical need for airport property.

(a) Details should be subordinated to property lines and tract outlines by half toning, screening, or other similar techniques.

(b) A screened reproducible of the Airport Layout Drawing may be used as the base for the Airport Property Map.

(c) Airport boundary lines and lines depicting property interest areas should be bold so as to stand out from background details.

Appendix 8. RUNWAY DESIGN RATIONALE

1. SEPARATIONS. Dimensions shown in tables 2-1, 2-2, 3-1, 3-2, and 3-3 may vary slightly due to rounding off.

a. Runway to holdline separation is derived from landing and takeoff flight path profiles and the physical characteristics of airplanes. The runway to holdline standard satisfies the requirement that no part of an airplane (nose, wingtip, tail, etc.) holding at a holdline penetrates the obstacle free zone (OFZ). Additionally, the holdline standard keeps the nose of the airplane outside the runway safety area (RSA) when holding prior to entering the runway. When the airplane exiting the runway is beyond the standard holdline, the tail of the airplane is also clear of the RSA. Additional holdlines may be required to prevent airplane, from interfering with the ILS localizer and glide slope operations.

b. Runway to parallel taxiway/taxilane separation is determined by the landing and takeoff flight path profiles and physical characteristics of airplanes. The runway to parallel taxiway/taxilane standard precludes any part of an airplane (tail, wingtip, nose, etc.) on a parallel taxiway/taxilane centerline from being within the runway safety area or penetrating the OFZ.

c. Runway to airplane parking areas is determined by the landing and takeoff flight path profiles and physical characteristics of airplanes. The runway to parking area standard precludes any part of a parked airplane (tail, wingtip, nose, etc.) from being within the runway object free area or penetrating the OFZ.

2. OBSTACLE FREE ZONE (OFZ). The portion of the OFZ within 200 feet (60 m) of the runway centerline is required for departure clearance. The additional OFZ, beyond 200 feet (60 m) from runway centerline, is required to provide an acceptable accumulative target level of safety without having to adjust minimums. The level of safety for precision instrument operations is determined by the collision risk model. The collision risk model is a computer program developed from observed approaches and missed approaches. It provides the probability of an airplane passing through any given area along the flight path of the airplane. To obtain an acceptable accumulative target level of safety with objects in the OFZ, operating minimums may have to be adjusted.

3. RUNWAY SAFETY AREA. In the early years of aviation, all airplanes operated from relatively unimproved airfields. As aviation developed, the alignment of takeoff and landing paths centered on a well defined area known as a landing strip. Thereafter, the requirements of more advanced airplanes necessitated improving or paving the center portion of the landing strip. The term "landing strip" was retained to describe the graded area surrounding and upon which the runway or improved surface was constructed. The primary role of the landing strip changed to that of a safety area surrounding the runway. This area had to be capable, under normal (dry) conditions, of supporting airplanes without causing structural damage to the airplanes or injury to their occupants. Later, the designation of the area was changed to "runway safety area," to reflect its functional role. The runway safety area enhances the safety of airplanes which undershoot, overrun, or veer off the runway, and it provides greater accessibility for firefighting and rescue equipment during such incidents. Figure A8-1 depicts the approximate percentage of airplanes undershooting and overrunning the runway which stay within a specified distance from the runway end. The runway safety area is depicted in figure 3-1 and its dimensions are given in tables 3-1, 3-2, and 3-3.

4. RUNWAY OBJECT FREE AREA (ROFA). The ROFA is a result of an agreement that a minimum 400-foot (120 m) separation from runway centerline is required for equipment shelters, other than localizer equipment shelters. The aircraft parking limit line no longer exists as a separate design standard. Instead, the separations required for parked aircraft and the building restriction line from the runway centerline are determined by object clearing criteria.

5. RUNWAY SHOULDERS AND BLAST PADS. Chapter 8 contains the design considerations for runway shoulders and blast pads.

6. CLEARWAY. The use of a clearway for takeoff computations requires compliance with the clearway definition of FAR Part 1.

7. STOPWAY. The use of a stopway for takeoff computations requires compliance with the stopway definition of FAR Part 1.

8. RUNWAY PROTECTION ZONE (RPZ). Approach protection zones were originally established to define land areas underneath aircraft approach paths in which control by the airport operator was highly desirable to prevent the creation of airport hazards. Subsequently, a 1952 report by the President's Airport Commission (chaired by James Doolittle), entitled "The Airport and Its Neighbors," recommended the establishment of clear areas beyond runway ends. Provision of these clear areas was not only to preclude obstructions potentially hazardous to aircraft, but also to control building construction as a protection from nuisance and hazard to people on the ground. The Department of Commerce concurred with the recommendation on the basis that this area was "primarily for the purpose of safety and convenience to people on the ground." The FAA adopted "Clear Zones" with dimensional standards to implement the Doolittle Commission's recommendation. Guidelines were developed recommending that clear zones be kept free of structures and any development which would create a place of public assembly.

In conjunction with the introduction of the RPZ as a replacement term for clear zone, the RPZ was divided into "object free" and "controlled activity" areas. The RPZ function is to enhance the protection of people and property on the ground. Where practical, airport owners should own the property under the runway approach and departure areas to at least the limits of the RPZ. It is desirable to clear the entire RPZ of all aboveground objects. Where this is impractical, airport owners, as a minimum, shall maintain the RPZ clear of all facilities supporting incompatible activities. Incompatible activities include, but are not limited to, those which lead to an assembly of people.

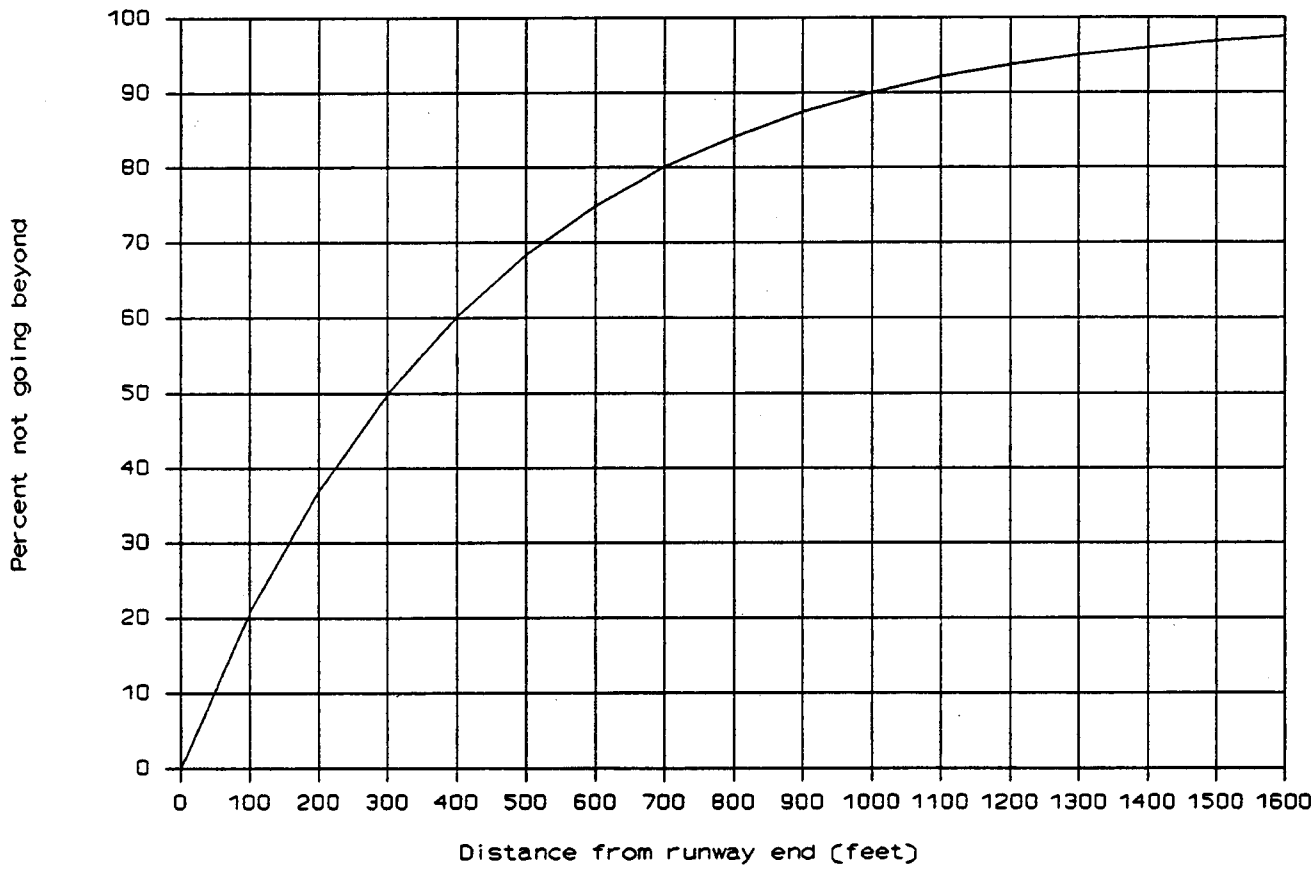

Figure A8-1. Approximate distance airplanes undershoot and overrun the runway end

Appendix 9. TAXIWAY AND TAXILANE DESIGN RATIONALE

1. INTRODUCTION. An airport operator is occasionally faced with the problem of having to cope with unusual terrain, local conditions, or the need to accommodate a specific airplane without accommodating other more demanding airplanes in the same airplane design group. This appendix provides the reasoning behind the selection of the various widths, clearances, and separations related to airplane physical characteristics. This rationale is usable, on a case-by-case basis, when local conditions or a specific airplane require modification of FAA airport design standards.

2. BACKGROUND AND RATIONALE. The minimum pavement widths, curve radii, and separations associated with airplane movement areas and airplane physical characteristics establish the taxiway system. Since the taxiway system is the transitional facility which supports airport operational capacity, the capability to maintain an average taxiing speed of at least 20 m.p.h. (30 km per hour) needs to be built into the system.

a. Separations. The parameters affecting separation criteria for taxiing airplanes, other than between a runway and its parallel taxiway, are wingspan and wingtip clearance. The need for ample wingtip clearance is driven by the fact that the pilots of most modern jets cannot see their airplane's wingtips.

(1) Taxiway to taxiway centerline separation, as shown in figure A9-1, is equal to 1.20 times the wingspan of the most demanding airplane plus 10 feet (3 m). This gives a wingtip clearance of 0.20 times the wingspan plus 10 feet (3 m). However, this separation may require an increase to accommodate minimum radius taxiway turns of 180 degrees, as shown in figure 4-10. The minimum acceptable radius is one which results in a maximum nosewheel steering angle (B) of 50 degrees. Appendix 10 discusses nosewheel steering angles.

(2) Taxiway centerline to object separation, as shown in figures A9-2 and A9-3, has the same wingtip clearances as taxiway to taxiway centerline separation. Thus, a minimum separation between a taxiway centerline and an object is 0.70 times the wingspan of the most demanding airplane, plus 10 feet (3 m).

(3) Taxiway object free area width is equal to twice the taxiway centerline to object separation.

(4) Taxilane centerline to object separation, as shown in figure A9-4, is equal to 0.60 times the wingspan of the most demanding airplane plus 10 feet (3 m). This gives a wingtip clearance of 0.10 times the wingspan plus 10 feet (3 m). This gives a wingtip clearance of one-half of that for an apron taxiway plus 5 feet (1.5 m). Reduced clearances are acceptable because taxi speed is very slow outside the movement area, taxiing is precise, and special operator guidance techniques and devices are normally present.

(5) Taxilane object free area width is twice the taxilane to object separation for a single lane width and 2.30 times the wingspan of the most demanding airplane plus 30 feet (9 m) for a dual lane width.

b. Taxiway Width. For a taxiway system to function safely and efficiently, the taxiway pavement needs to be of sufficient width to provide adequate clearance between the outside wheel and the pavement edge. This clearance permits normal deviations from the taxiway centerline or the intended path while taxiing at 20 mph (30 km per hour).

(1) Taxiway widths relate to the physical characteristics of airplanes. For example, a small high-performance jet airplane with long takeoff and landing requirement and a narrow undercarriage may operate on a relatively narrow taxiway. Conversely, a large airplane with short takeoff and landing capability, but with a wide undercarriage, requires a wider taxiway. Consequently, taxiway width is independent of runway length. The taxiway width should be at least equal to the sum of the undercarriage width plus two times the acceptable taxiway edge safety margin of the most demanding airplane.

(2) Table 4-1 specifies the clearance for tangents and curves, illustrated in figure A9-5, as taxiway edge safety margin.

c. Curves and Fillets. Taxiing around turns is difficult for pilots of airplanes with long wheelbases or when the cockpit is high and in front of the nosewheel. Appendix 10 covers detailed fillet design.

d. Taxiway Shoulders. Chapter 8 contains the design considerations for taxiway shoulders.

e. Taxiway Safety Area. To provide room for rescue and firefighting operations, the taxiway safety area width equals at least the wingspan of the most demanding airplane.

3. EXIT TAXIWAY LOCATION. Table A9-1 presents cumulative percentages of airplanes observed exiting existing runways at specific exit taxiway locations. In general, each 100-foot (30 m) reduction of the distance from the threshold to the exit taxiway reduces the runway occupancy time by approximately 3/4 of a second for each airplane using the exit. Conversely, the runway occupancy time of each additional airplane now overrunning the new exit location is increased by approximately 3/4 of a second for each 100 feet (30 m) from the old location to the next available exit.

For example, the percent of airplanes exiting at or before an exit located 4,000 feet (1220 m) from the threshold are:

a. When the runway is wet, 100 percent of A, 80 percent of B, 1 percent of C, and 0 percent of D airplanes;

b. When the runway is dry and the exit is right angled, 100 percent of A, 98 percent of B, 8 percent of C, and 0 percent of D airplanes; and

c. When the runway is dry and the exit is acute angled, 100 percent of A, 98 percent of B, 26 percent of C, and 3 percent of D airplanes.

When selecting the location and type of exit both the wet and dry runway conditions along with a balance between increases and decreases in runway occupancy time should be considered.

Table A9-1. Exit taxiway cumulative utilization percentages

DISTANCE THRESHOLD TO EXIT	WET RUNWAYS				DRY RUNWAYS							
	RIGHT & ACUTE ANGLED EXITS				RIGHT ANGLED EXITS				ACUTE ANGLED EXITS			
	A	B	C	D	A	B	C	D	A	B	C	D
0 ft (0 m)	0	0	0	0	0	0	0	0	0	0	0	0
500 ft (152)	0	0	0	0	0	0	0	0	1	0	0	0
1000 ft (305 m)	4	0	0	0	6	0	0	0	13	0	0	0
1500 ft (457 m)	23	0	0	0	39	0	0	0	53	0	0	0
2000 ft (610 m)	60	0	0	0	84	1	0	0	90	1	0	0
2500 ft (762 m)	84	1	0	0	99	10	0	0	99	10	0	0
3000 ft (914 m)	96	10	0	0	100	39	0	0	100	40	0	0
3500 ft (1067 m)	99	41	0	0	100	81	2	0	100	82	9	0
4000 ft (1219 m)	100	80	1	0	100	98	8	0	100	98	26	3
4500 ft (1372 m)	100	97	4	0	100	100	24	2	100	100	51	19
5000 ft (1524 m)	100	100	12	0	100	100	49	9	100	100	76	55
5500 ft (1676 m)	100	100	27	0	100	100	75	24	100	100	92	81
6000 ft (1829 m)	100	100	48	10	100	100	92	71	100	100	98	95
6500 ft (1981 m)	100	100	71	35	100	100	98	90	100	100	100	99
7000 ft (2134 m)	100	100	88	64	100	100	100	98	100	100	100	100
7500 ft (2686 m)	100	100	97	84	100	100	100	100	100	100	100	100
8000 ft (2438 m)	100	100	100	93	100	100	100	100	100	100	100	100
8500 ft (2591 m)	100	100	100	99	100	100	100	100	100	100	100	100
9000 ft (2743 m)	100	100	100	100	100	100	100	100	100	100	100	100

A - Small, single engine 12,500 lbs (5 700 kg) or less
B - Small, twin engine 12,500 lbs (5 700 kg) or less
C - Large 12,500 lbs (5 700 kg) to 300,000 lbs (136 000 kg)
D - Heavy 300,000 lbs (136 000 kg)

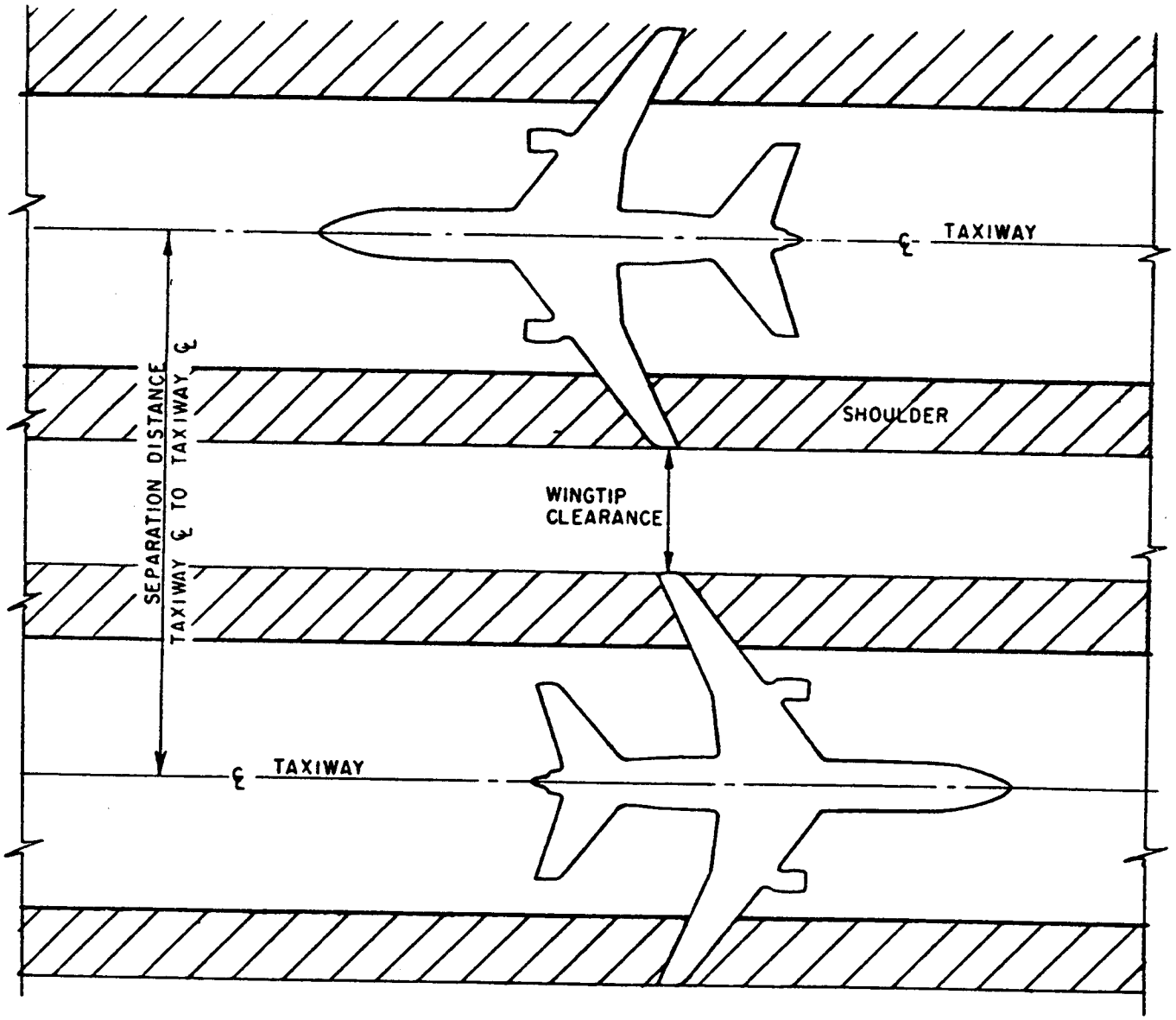

Figure A9-1. Wingtip clearance - parallel taxiways

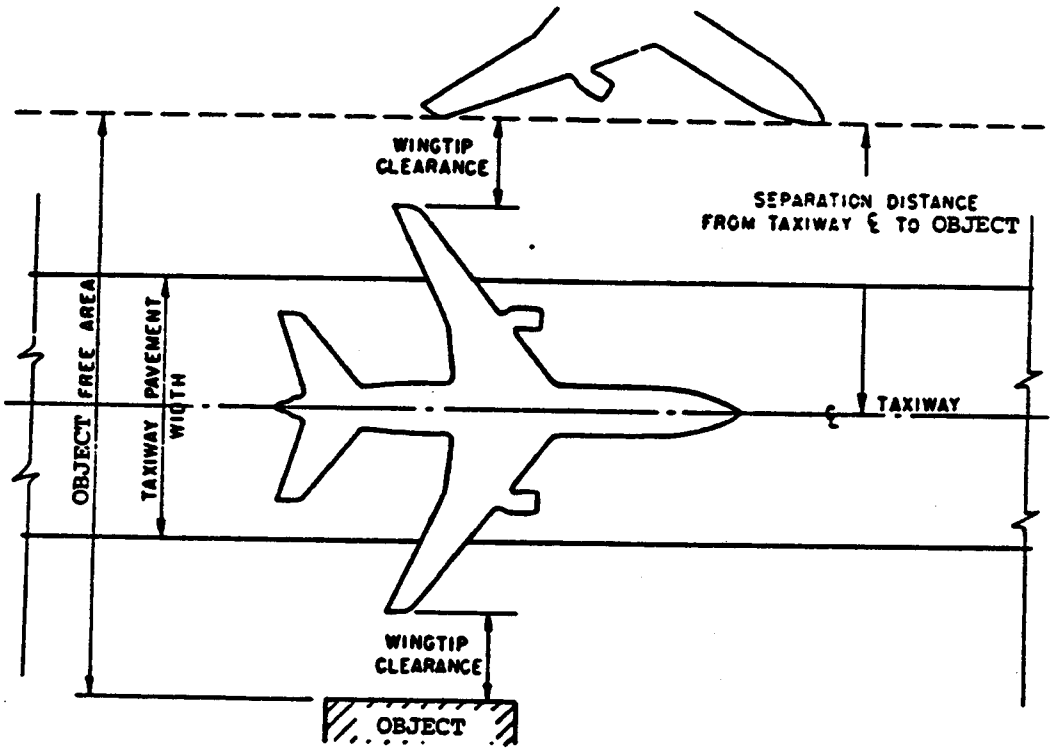

Figure A9-2. Wingtip clearance from taxiway

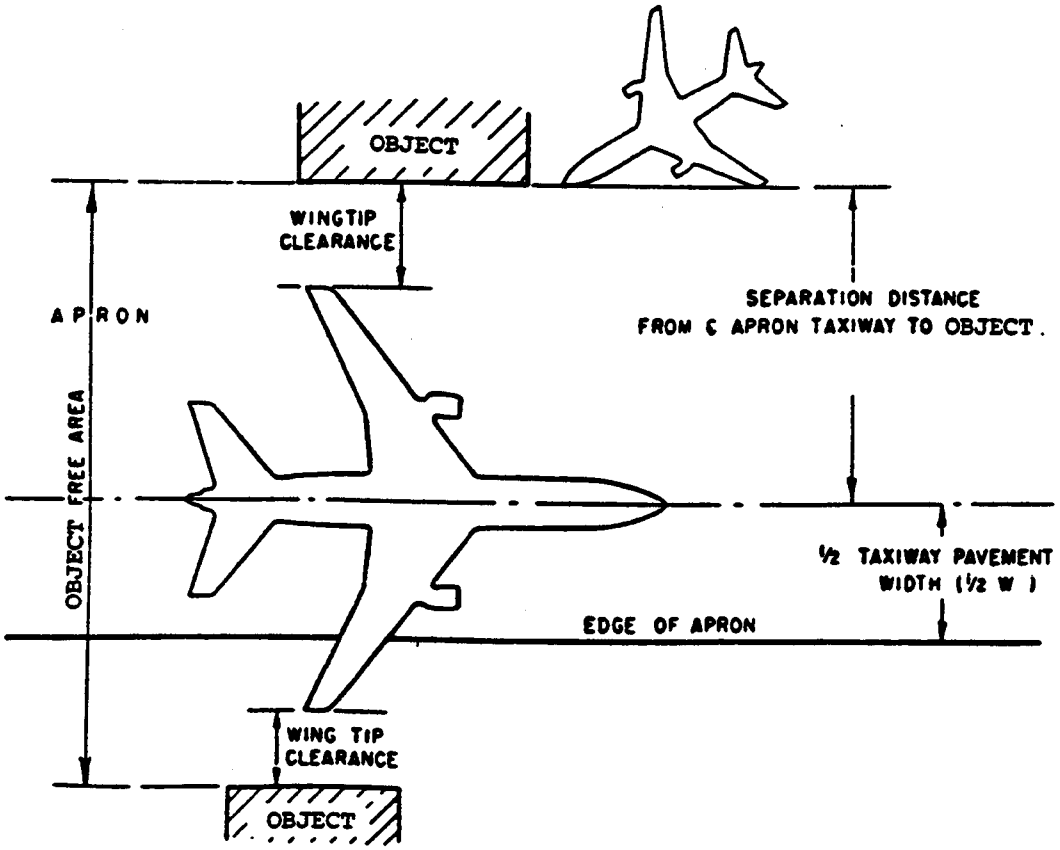

Figure A9-3. Wingtip clearance from apron taxiway

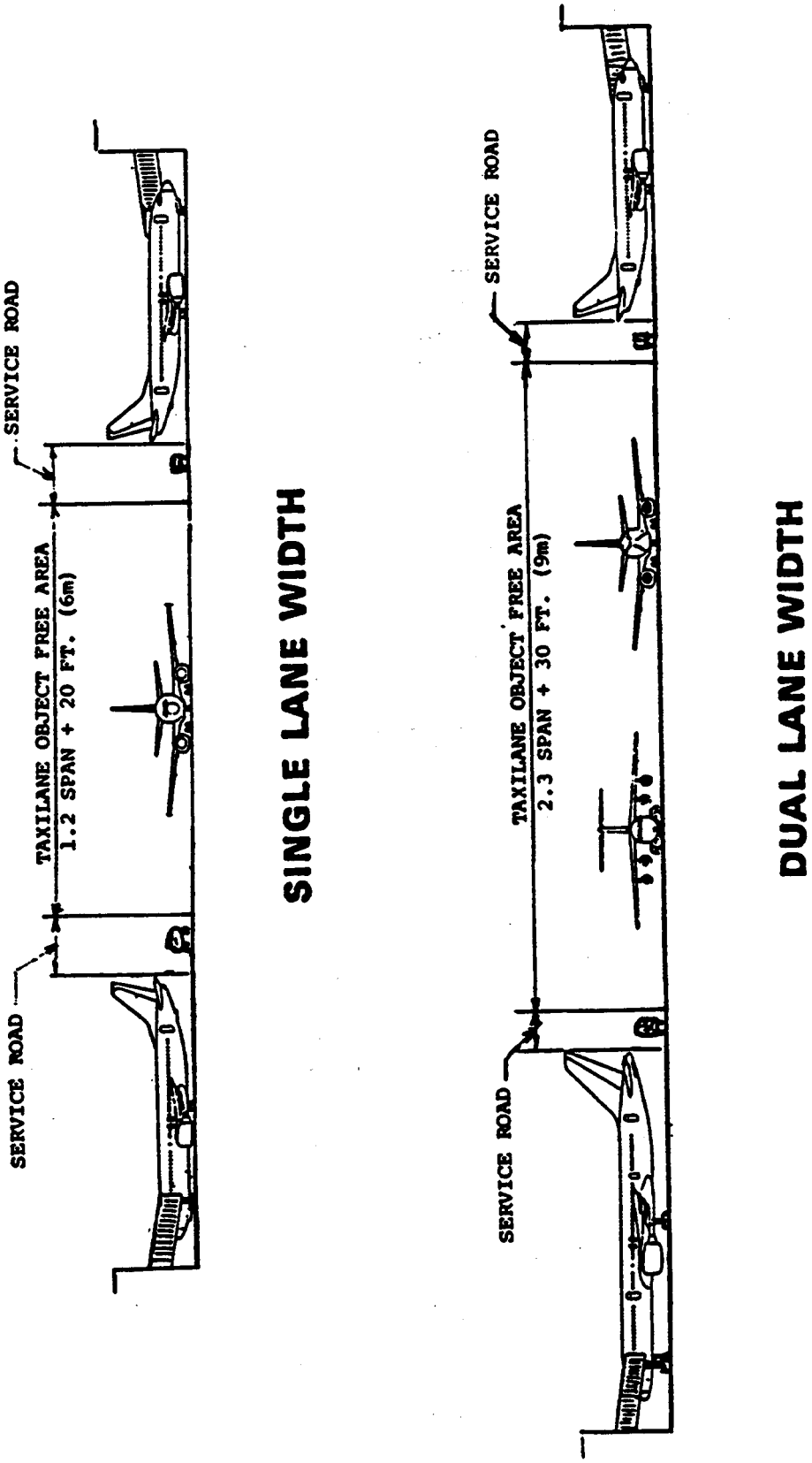

Figure A9-4. Wingtip clearance from taxilane

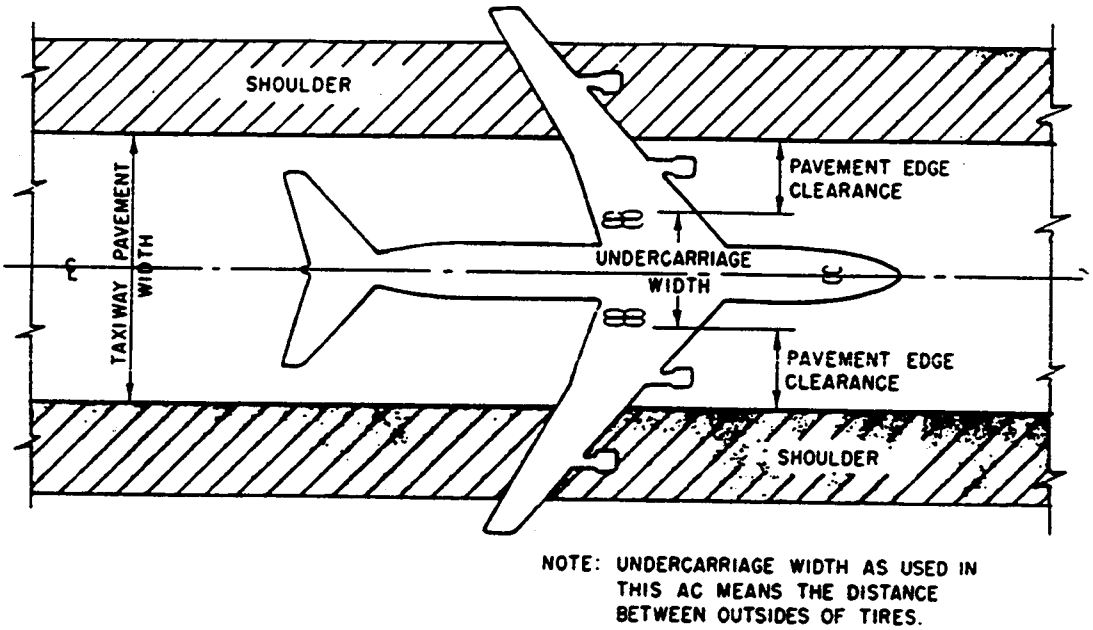

Figure A9-5. Pavement edge clearance on tangent

4. WINGTIP TRACE. The following equations calculate the rectangular coordinates of points on the wingtip trace.

$$x = x_c - t \cos (A - B) \pm .5s \sin (A - B)$$

$$y = y_c + t \sin (A - B) \pm .5s \cos (A - B)$$

x_c and y_c are the rectangular coordinates of a selected point on the centerline pavement markings. One centerline point is required for each trace point.

A is the angle formed by the tangent to the centerline pavement markings and the longitudinal axis of the airplane at the selected point. Appendix 10 provides instructions for obtaining this angle.

B is the angle direction of the centerline pavement markings at the select centerline point.

t is the longitudinal distance from the center of airplane cockpit to the airplane wingtip.

s is the airplane wingspan.

To obtain the wingtip clearance trace, add the wingtip clearance to the wingtip trace.

a. The airport design computer program described in appendix 11 provides the OFA clearance fillet requirement directly.

(1) Figure A9-6 depicts the McDonnell-Douglas MD-88 wingtip clearance traces for a 100-foot (30.5 m) radius of turn with centerline pavement markings.

(2) Figure A9-7 depicts the McDonnell-Douglas MD-88 wingtip clearance trace for a 100-foot (30.5 m) radius of turn with offset centerline pavement markings located on a 120-foot (30.5 m) radius arc.

(3) Figure A9-8 depicts the Boeing 727-200 wingtip clearance trace for a 100-foot (30.5 m) radius of turn with offset centerline pavement markings located on a 120-foot (30.5 m) radius arc.

(4) Figure A9-9 depicts the Boeing 727-100 wingtip clearance trace for a 100-foot (30.5 m) radius of turn with offset centerline pavement markings located on a 120-foot (30.5 m) radius arc.

b. The computer program treats the offset taxilane pavement markings arcs as five sections:

(1) A tangent section;

(2) A circular section comprised of a $\pm\cos^{-1}$(turn radius/offset radius) degree angle (same sign as the intersection angle) and a 0-foot radius;

(3) the offset arc (a circular section comprised of the intersection angle and the offset radius);

(4) A circular section comprised of a $\pm\cos^{-1}$(turn radius/offset radius) degree angle (apposite sign as the intersection angle) and a 0-foot radius; and

(5) A tangent section.

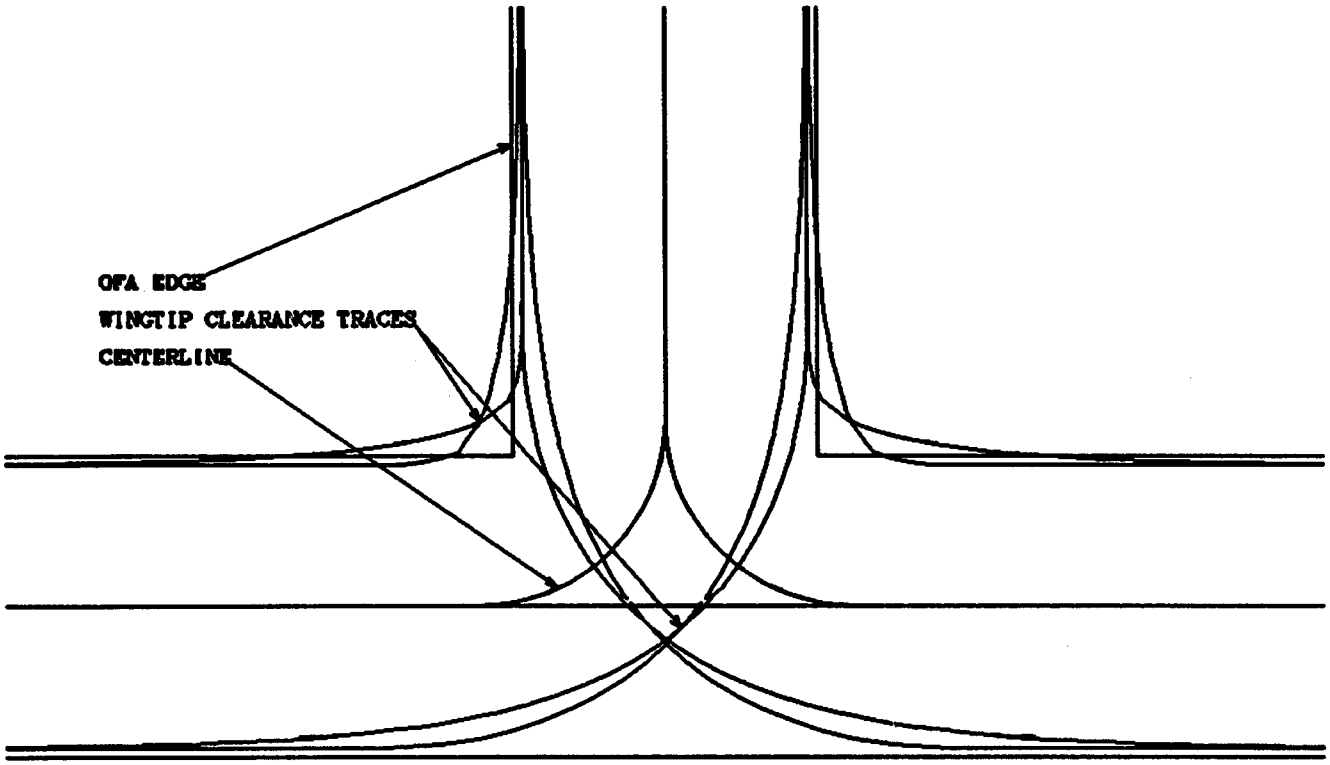

Figure A9-6. McDonnell-Douglas MD-88 wingtip clearance trace for a 100-foot (30.5 m) radius centerline

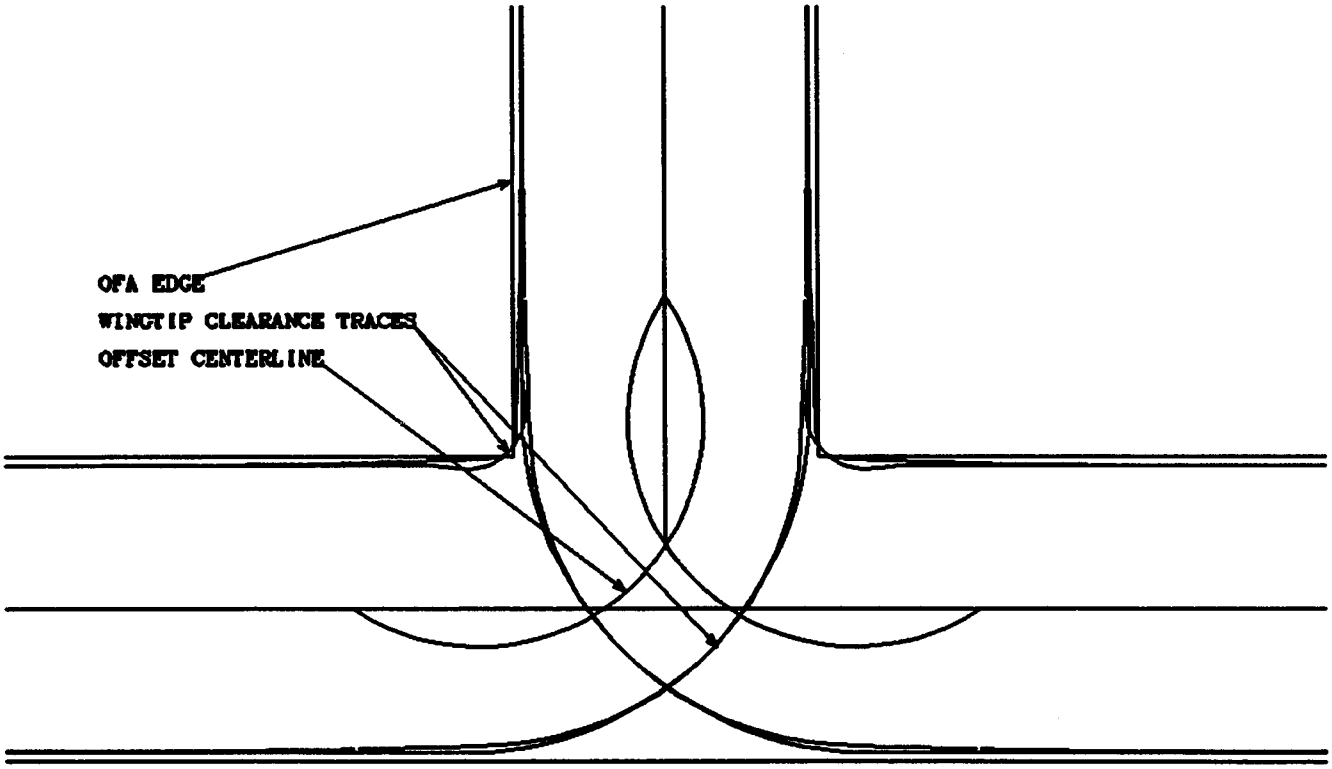

Figure A9-7. McDonnell-Douglas MD-88 wingtip clearance trace for a 120-foot (36.5 m) radius offset centerline

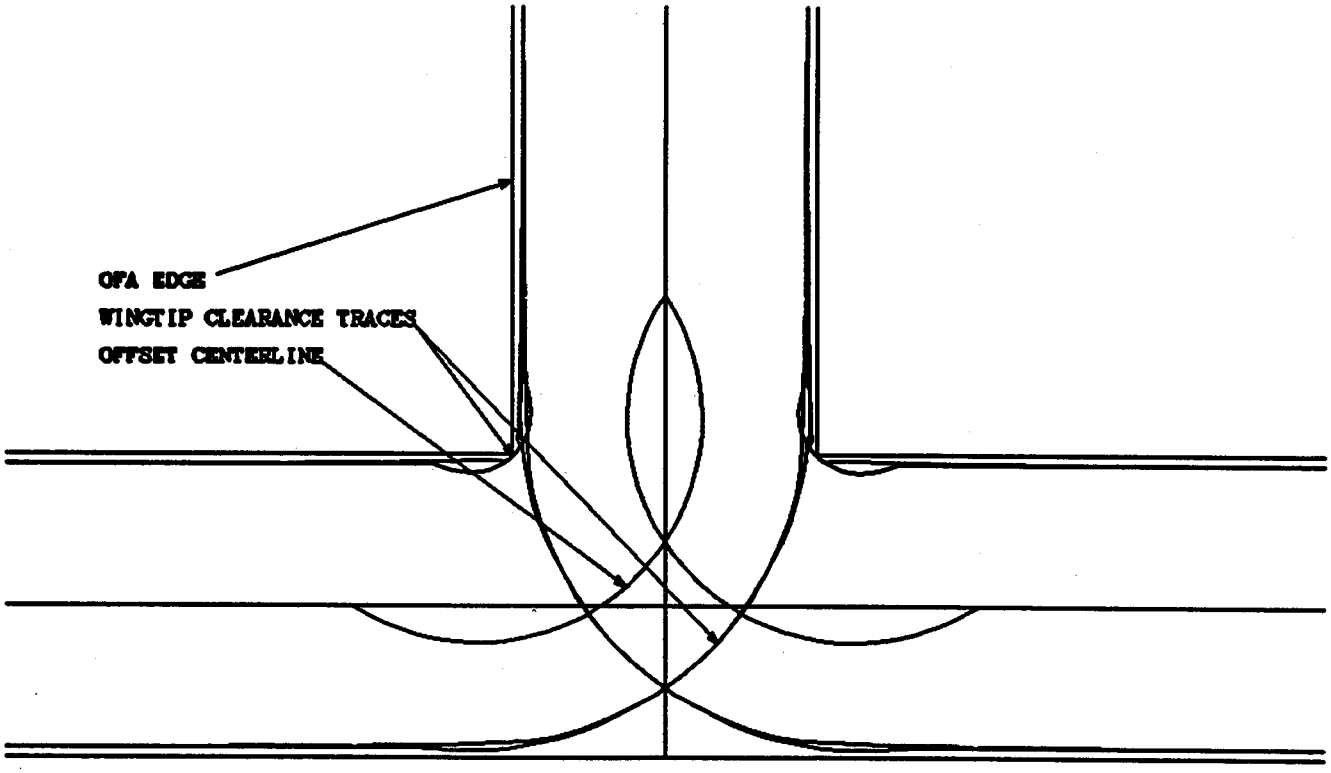

Figure A9-8. Boeing 727-200 wingtip clearance trace for a 120-foot (36.5 m) radius offset centerline

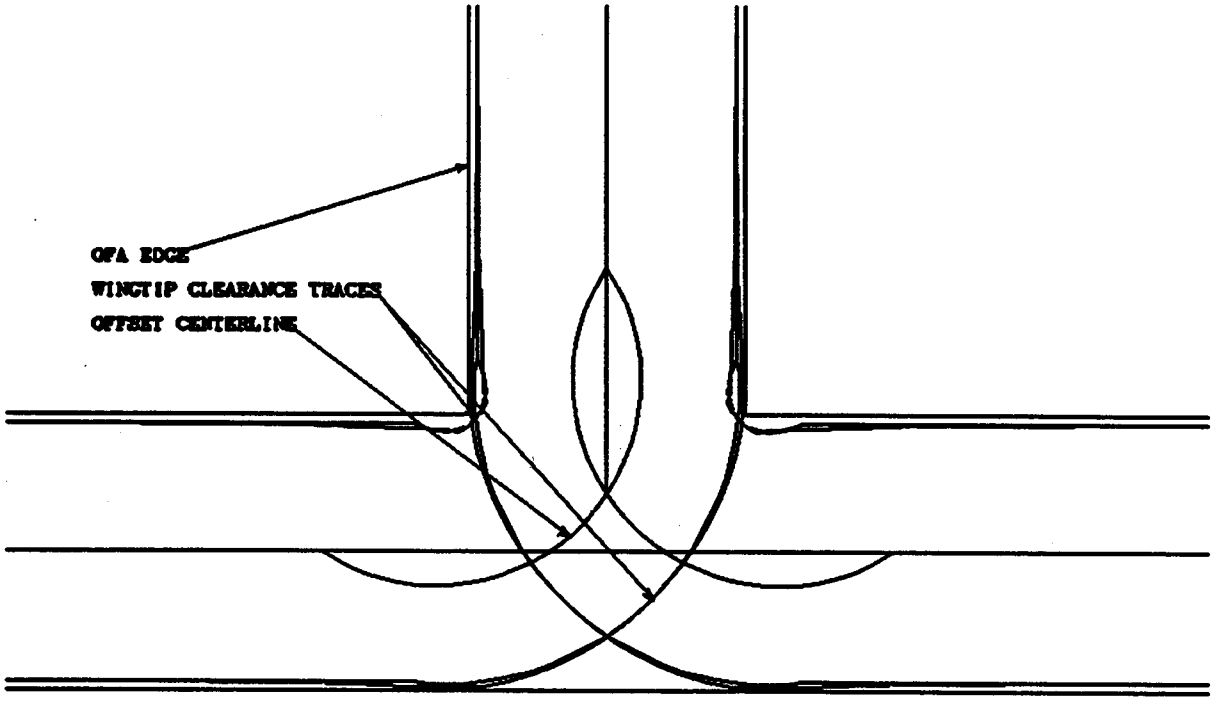

Figure A9-9. Boeing 727-100 wingtip clearance trace for a 120-foot (36.5 m) radius offset centerline

Appendix 10. TAXIWAY FILLET DESIGN

1. INTRODUCTION. This appendix details the methodology for the design of fillets for airport taxiways. This methodology is equally applicable for either the judgmental oversteering and the maintaining cockpit over centerline method of fillet design. The computer program cited in Appendix 11 computes these fillet dimensions for the maintaining cockpit over centerline method of fillet design. Figures A10-1 and A10-2 illustrate the terms and symbols used in the following equations:

a. Angle A. The angle formed by the tangent to the guideline and the longitudinal axis of airplane at point N.

(1) For R less than d:

$$A = 2\tan^{-1}[x\tan(\tan^{-1}((\tan(.5A_o) - R/d)/x) + 28.648xS/R) + R/d]$$

(2) For R equal to d:

$$A = 2\tan^{-1}[1/(1/(\tan(.5A_o) - 1) - .5S/R) + 1]$$

(3) For R greater than d:

$$A = 2\tan^{-1}[y(2/(1 - z) - 1) + R/d]$$

(4) For tangent section:

$$A = 2\tan^{-1}[\tan(.5A_t)/2.7183^{S/d}]$$

b. Angle A_{max}. Angle A with point N at the point of tangency (P.T.) or at the point of change of curvature (P.C.C.). At the end of a long curve:

$$A_{max} = \sin^{-1}(d/R)$$

c. Angle A_o. Angle A with point N at the point of curvature (P.C.). The angle A_o at the end of a long tangent section is zero (0) degrees.

d. Angle A_t. Angle A with point N at the point of tangency (P.T.).

e. Nosewheel Steering Angle (B). The angle the nosewheel makes with the longitudinal axis of the airplane. In the design of pavement fillets, check to ensure that the nosewheel steering angle does not exceed 50 degrees. If exceeded, choose a larger radius of arc (R).

$$B = \tan^{-1}[(w/d)\tan A]$$

$$B_{max} = \tan^{-1}[(w/d)\tan A_{max}]$$

f. Airplane Datum Length (d). The distance between point N and the center of the main undercarriage.

g. Radius of Fillet Arc (F). The radius of the fillet measured from the center of the taxiway longitudinal curvature (0). To provide an acceptable taxiway edge safety margin (M), the radius of fillet should be equal to or less than:

$$F = (R^2 + d^2 - 2Rd\sin A_{max})^{.5} - .5u - M$$

h. Length of Lead-in to Fillet (L). The distance from the P.T. to the end of the fillet. To provide an acceptable taxiway edge safety margin (M), the length of lead-in to the fillet should be equal to or greater than:

$$L = d\{\ln[4d\tan(.5A_t)/(W - u - 2M)]\} - d$$

i. Taxiway Edge Safety Margin (M). The minimum distance between the outside of the airplane wheels and the pavement edge. The minimum acceptable taxiway edge safety margin is given in table 4-1.

j. Point N. The point beneath the longitudinal axis of the airplane which tracks the guideline on the ground. Point N is located:

(1) For judgmental oversteering, beneath the longitudinal axis of the airplane at a distance from the center of the main undercarriage equal to the following. This distance provides a safety margin to compensate for the lack of positive guidance.

(a) Widening on only one side:

$$d = (R^2 - (R + .5W - 2M)^2 + w^2)^{.5}$$

(b) Widening symmetrical:

$$d = (R^2 - (2R - F - 2M)^2 + w^2)^{.5}$$

(2) For cockpit over centerline, beneath the cockpit of the airplane.

k. Radius of Arc (R). The radius of the arc at point N measured from center of curvature (O) to the point N.

l. Distance S. The distance from the P.C. to the point N along the arc for arc sections and from the P.T. to the point N along the tangent for tangent sections.

m. Undercarriage Width (u). The distance between the airplane's outer main wheels, including the width of the wheels. For airport design purposes, when the dimension "u" is not available, assume "u" to be 1.15 times the airplane's main gear track.

n. Wheelbase (w). The distance between the nosewheel and the center of the main undercarriage.

o. Taxiway Width (W). The taxiway pavement width on the tangent section. The taxiway width should be greater than the sum of the undercarriage width plus two times the acceptable taxiway edge safety margin (M).

p. Symbol x.

$$x = (1 - (R/d)^2)^{.5}$$

q. Symbol y.

$$y = ((R/d)^2 - 1)^{.5}$$

r. Symbol z.

$$z = 2.7183^{yS/R}(R/d + y - \tan(.5A_o))/(R/d - y - \tan(.5A_o))$$

2. EXAMPLE NO. 1, JUDGMENTAL OVERSTEERING. Given: Airplane wingspan 196 feet (59.7 m), wheelbase 84 feet (25.6 m), undercarriage width 41 feet (12.5 m), and R = 150 feet (45 m) for 180 degree turn. Taxiway width is 75 feet (23 m), fillet radius, widening on only one side, is 97 feet (29 m), and lead-in to fillet is 250 feet (75 m).

Step 1 - Acceptable M = 15.0 feet (4.5 m)

Step 2 - Calculate Amax = 27.3 degrees (27.2 degrees)

Step 3 - Calculate Bmax = 32.2 degrees (32.6 degrees)

Step 4 - Calculate provided M = 15.8 feet (4.8 m)

3. EXAMPLE NO. 2, MAINTAINING COCKPIT OVER CENTERLINE. Given: Airplane wingspan 196 feet (59.7 m), wheelbase 84 feet (25.6 m), distance between main undercarriage and cockpit 90 feet (27.4 m), undercarriage width 41 feet (12.5 m), and cockpit following R = 150 feet (45 m) for 180 degree turn. Taxiway width is 75 feet (22 m).

Step 1 - Acceptable M = 15.0 feet (4.5 m)

Step 2 - Calculate A_{max} = 36.4 degrees (37.0 degrees)

Step 3 - Calculate B_{max} = 34.5 degrees (35.1 degrees)

Step 4 - Calculate F_{max} = 85.2 feet (25.2 m)

Step 5 - Calculate L_{min} = 215 feet (60.2 m)

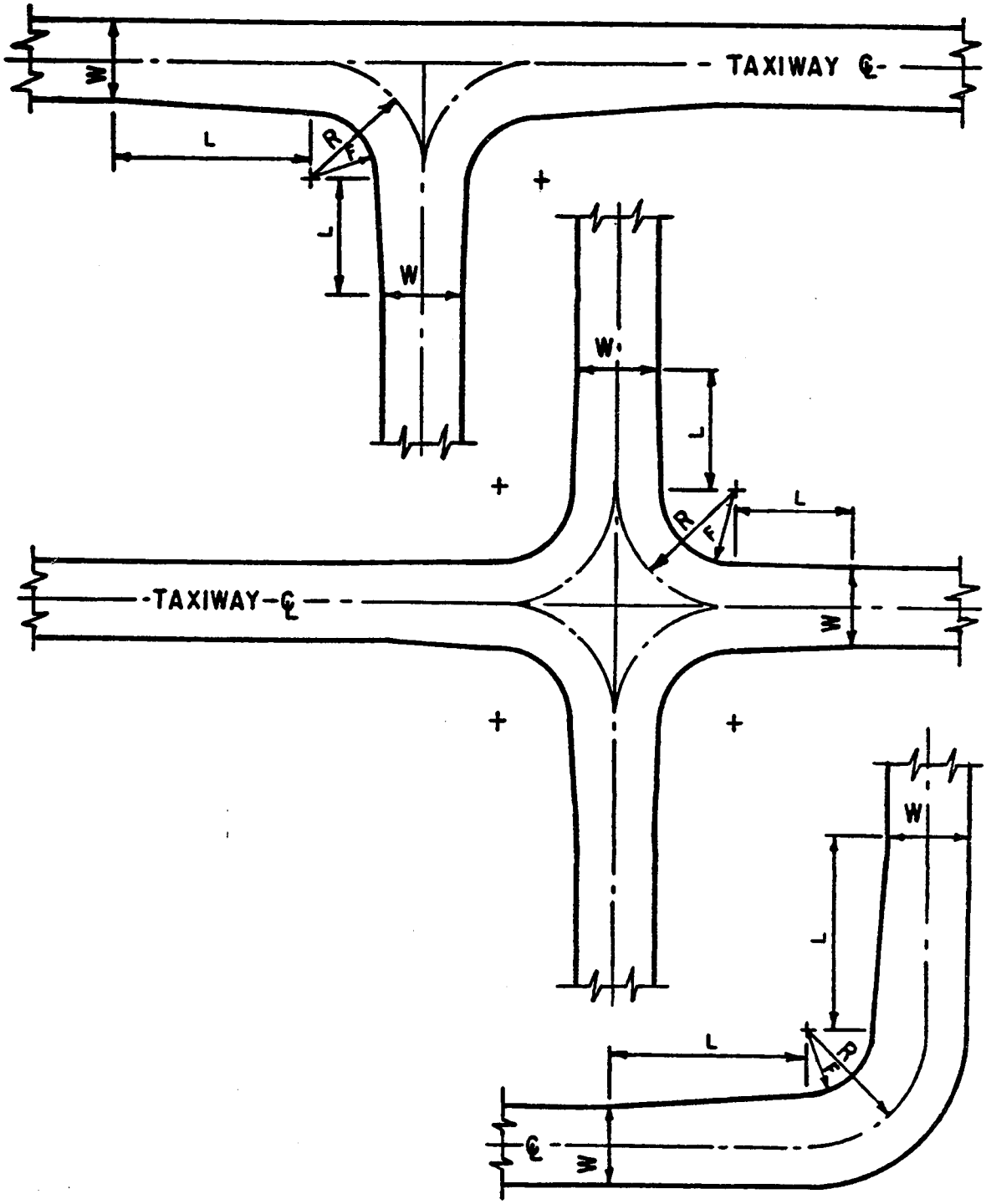

Figure A10-1. Taxiway intersection details

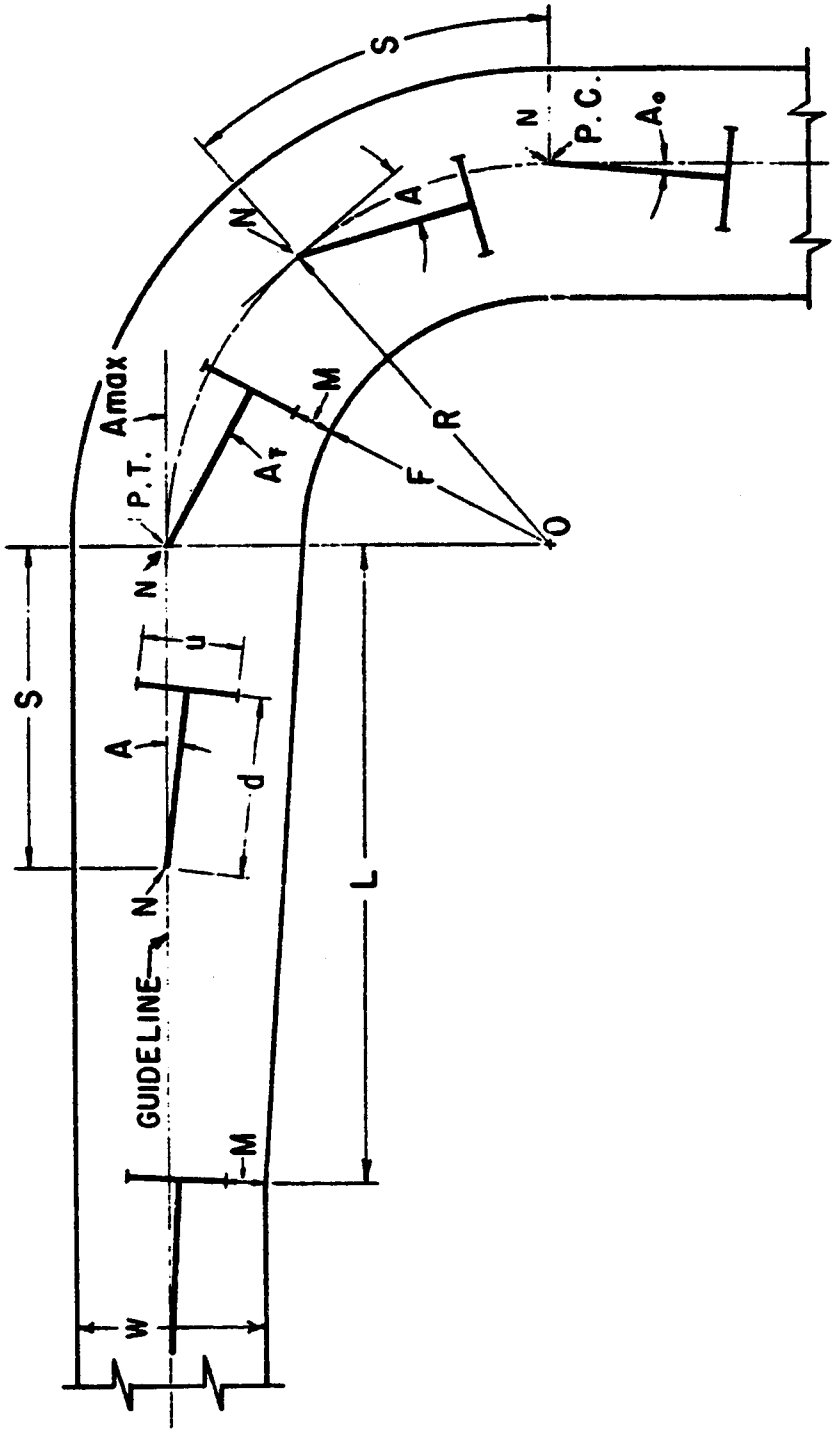

Figure A10-2. Depiction of symbols

Appendix 11. COMPUTER PROGRAM

1. AIRPORT DESIGN (FOR MICROCOMPUTERS) VERSION 4.1. Airport Design (for microcomputers) version 4.1 provides:

a. Width and clearance standard dimensions for runway, taxiway, taxilane, and associated facilities;

b. Recommended runway lengths;

c. Runway wind coverage analysis;

d. Files for editing, printing, and plotting windroses with AutoCAD and Design CAD2D (formally Prodesign II);

e. Files loadable into WordPerfect, Microsoft Word, and other CAD/CAM systems;

f. Taxiway exit, intersection, and curve configurations;

g. Airplane wingtip clearance analyses;

h. Airport capacity and delay for long range planning; and

i. Declared distance lengths.

2. HOW TO OBTAIN A COPY OF AIRPORT DESIGN (FOR MICROCOMPUTERS) VERSION 4.1. Airport Design version 4.1 is available for downloading from the Office of Airport Safety and Standards Electronic Bulletin Board System.

Telephone number:	(202) 267-5205
Data bits:	8
Parity:	(N)one
Stop bits:	1
Buad rate:	300/1200/2400/9600/14400

3. REQUIREMENTS. Airport Design version 4.1 runs on the IBM PC family of computers and all true IBM compatible. It requires DOS of 3.1 or higher and at least 640K of RAM.

4. SETUP ON A MICROCOMPUTER. This program is composed of seven files namely AD.EXE, HELP.TXT,HELPE.PLT,HELPM.PLT,WINDDXF.AD, WINDPD1.AD, and WINDPLT.AD. These files must be located into a subdirectory. If you have Microsoft Windows, run this program as a Non-Windows Application to make use of the Windows graphic printing applications. Make the subdirectory, where the program files are located, the start-up directory. The working directories should be other than the start-up directory. Adjust the graphic colors with Shift F4, the size with Page Up and Page Down, and the location with the cursor keys of the graphic displayed on the screen as required by the windows application.

5. RUN AIRPORT DESIGN PROGRAM. The first window displayed on the screen upon executing AD.EXE is the airport design task selection window. Press the task number listed in the left margin or scroll to the task line and press <—┘ to select a task from this list.

6. HOT KEYS. The HOT KEYS are as follows:

<—┘ advances the program one step.
Esc retreats the program one or more steps.
Alt X exits the program.
Ctrl C (Controlled Crash) aborts the program.

Hot keys, when listed at the bottom of screen, are:

F1-Help - Press F1 and scroll for more program help instructions. When the help instructions are on the screen, press H or the task number to fast scroll to the top of the HOT KEYS or the top of the task help instructions. Press <—┘ or Esc to end the help section.

F2-Save - Press F2 and enter output file name to create a DOS text *.TXT file. Scroll to preview the entire file. Press <—┘ or Esc to end the preview section. These files are retrievable into WordPerfect, Microsoft Notepad, and back into the task which created the file.

F3-Retrieve or F3-Retrieve/Clear - Press F3 or F5 to retrieve a file. When files and directories are listed on the screen and hot key F3 is listed on the bottom of the screen, type or scroll to the file name and press F3 to retrieve the highlighted file or press Esc to return to where the program was when F3 or F5 was pressed. When a file is displayed on the screen and hot key F3 is listed on the bottom of the screen press F3 to retrieve the file. When files and directories are listed on the screen, all of the F5-Files functions may also be executed.

F3-Retrieve/Clear - Press Shift F3 to clear the wind observation data.

F4-Dir/Color - Press F4 and enter the drive letter to change the working drive. Press Shift F4 to change the graphic screen colors (Background and Pen colors). Press <—┘ or Esc to end the color change section.

F5-Files - Press F5 to list files and directories and to add hot keys F3, F4, F6, and F7 to the bottom of the screen. When files and directories are listed on the screen, type or scroll to the file or directory name and

press <—┘ to preview the highlighted file or change the highlighted directory or press Esc to return to where the program was when F5 was pressed. Line only HP plotter (HPGL) files are previewed in graphic format. To preview a HPGL file in the DOS text format, press <—┘ while "Please wait" is displayed on the screen. Press <—┘ or Esc to end the preview section.

F6-Delete - Type or scroll to the file name and press F6 to delete the highlighted file. Press F6 to delete a file being previewed on the screen.

F7-Print - When files and directories are listed on the screen and hot key F7 is listed on the bottom of the screen, type or scroll to the file name and press F7 to print the highlighted file. Press F7 to print the file being previewed on the screen.

F8-Quit - Press F8 to exit the program.

F9-PLT/PD1/DXF - Press F9 to create a windrose in the HP 7440A ColorPro plotter (HPGL) file format. Press Shift F9 to create a windrose in the Design CAD2D (formerly Prodesign II) file format. Press Alt F9 to create a windrose in the AutoCAD Drawing Interchange file format (DXF). Press <—┘ or Esc to end the preview section. The HPGL files are loadable into WordPerfect, Microsoft Word, and other CAD/CAM systems. The PD1 files are loadable into Design CAD2D (formerly Prodesign II). Call (918) 825-4844 for information on Design CAD2D.

F10-Find - Press F10 to find a string of characters in a file.

F10-Next - Press F10 to move to the next taxiway section. Press Esc to move back to the previous taxiway section.

7. RUNWAY AND TAXIWAY WIDTH AND CLEARANCE STANDARD DIMENSIONS. Task 1 calculates site specific runway, taxiway, taxilane, and other airport item's standard width and clearance dimensions. To obtain these dimensions:

a. Select task 1 (Item N1) from the airport design task selection window. Update the data items listed on the airport design airplane and airport data window (see figure A11-3). A change in one item may change one or more items down the list. Select items for updating starting from the top and work down the list. Press the item letter listed in the left margin, or scroll to the item line and type in the data, or press <—┘ to select an item. Press the data number or letter listed in the left margin or scroll to the data line and press <—┘ to select an item on the subtables. The following explains some of the data items:

(1) Item B. Changing the airplane design group will change the airplane wingspan to the maximum wingspan for that group. This is the wingspan used for the standard design group method of airport design. A small airplane is an airplane of 12,500 lbs (5 700 kilograms) or less maximum takeoff weight. A large airplane is an airplane of over 12,500 lbs (5 700 kilograms) maximum takeoff weight.

(2) Item C. Changing the airplane wingspan will adjust the airplane design group automatically. For airplanes with folding wingtips, input the taxiing wingspan(s) for taxiway and taxilane width and clearance standard dimension (Item N3). Input the takeoff and landing wingspan for all other width and clearance standard dimensions (Item N2).

(3) Item D. The primary runway end is the runway end the user selected as the primary end.

(4) Item I. The undercarriage width is the distance between the airplane's outer main wheels, including the width of the wheels. When this distance is not available, use 1.15 times the airplane's main gear track.

When the data items are updated, press F2, enter the output file name, and press <—┘ or Esc to end the preview section. Line items with two numbers represent the calculated design values for the rationale method (column one) and the airport reference code method (column two) (see figures A11-4 and A11-5).

8. RECOMMENDED RUNWAY LENGTHS. Task 2 from the airport design task selection window calculates the recommended runway length for airport design. Press F2 to save the recommended runway lengths and then print them by pressing F7. Refer to AC 150/5325-4, Runway Length Requirements for Airport Design, for details on runway length. The publication "Monthly Station Normals of Temperature, Precipitation, and Heating and Cooling Degree Days" (Climatography of the United States No.81) is the official source for the mean maximum temperature for the hottest month. This temperature is presented by station under the heading "Normal Max." The higher of these values should be selected to represent the hottest month. The latest data, averaged over a period of 30 years, may be obtained from the National Climatic Data Center, Federal Building, Asheville, North Carolina 28801. Specify the state(s) when ordering. Price is $2.00 per state plus a $5.00 service and handling charge.

9. STANDARD WIND ANALYSIS. This task calculates the wind coverage for up to a six runway configuration. Figure A11-6 displays a two bi-directional runway configuration analysis printout and figure A11-8

displays a one uni-directional runway configuration analysis printout.

a. To preform the wind analysis, select task 3 from the airport design task selection window, press Shift F3 to clear the wind data, and enter the wind data either from the keyboard, a DOS text file (retrieve by pressing F3), or a combination of both. Enter 60 knot tailwind component for bi-directional runways. Press F2 and enter the output file name to create a DOS text windrose file. Scroll to preview the entire file. Press F9 to create a windrose in the HP 7440A ColorPro plotter (HPGL) file format (PLT). Press Shift F9 to create a windrose in the Design CAD2D (formerly Prodesign II) file format (PD1). Press Alt F9 to create a windrose in the AutoCAD Drawing Interchange file format (DXF). Press <—┘ or Esc to end the preview section. The PLT files are loadable into WordPerfect, Microsoft Word, and other CAD/CAM systems. The PD1 files are loadable into Design CAD2D or Prodesign II.

b. The DOS text file may have an unlimited number of lines with a maximum of 120 columns each.

(1) The first 80 columns of the third line contain the location name. The third, fourth, etc., words (numbers) of the fourth, fifth, and sixth lines are the runway orientations, the crosswind components, and the tailwind components of the first, second, etc., runways.

(2) Lines 12 through 48 are wind observation data. The first word is the wind direction, the second word is the number of 0-3 knot wind observations, the third word is the number of 4-6 knot wind observations, etc. For words which are not numbers or are omitted, the number of wind observations is zero. All other data are ignored. The WIND.PRN file in the Airport Design package is an example of this DOS text file.

c. Wind data in this FAA format on disk can be purchased from the National Climatic Data Center (NCDC), Federal Building, Asheville, NC 28801 at a cost of $200.00 per summary plus an $11.00 service and handling charge. A summary can be ordered with several tables. One table for each combination of all weather and various combinations of ceiling and visibility for monthly, seasonal, and annual periods, with 24 hourly and selected time-of-day observations. Ask for the wind data summary in the FAA format for use with the Airport Design Microcomputer Program. For details on availability, call (704) 254-6283 (CLIMATE).

10. TAXIWAY DESIGN. Task 4 from the airport design task selection window contains seven subtasks. Figure A11-10 and appendix 10 depict the nomenclature used in this task.

a. Subtask 1 calculates the data required for laying out circular and spiral curves by the offset method. To calculate this data, select subtask 1, the type of section, and update the data items. Due to the redundance in data items, more than one datum item may change with each data entry; the number of * after the data items define which data items will change to accommodate the new entry. When the data items are updated, press F2, enter the station interval and the file name, preview the output file, and press <—┘ or Esc to end the preview.

b. Subtasks 2 through 5 calculate the offset distances from centerline to edge of pavement or object using the maintaining cockpit over centerline or the nosewheel on centerline method of pavement fillet design.

(1) To calculate the offset distances, select a subtask (2 through 5) and define the design airplane and conditions at the entrance of station 1 by updating the data items. The steering angle is the angle formed by the tangent to the guideline (centerline marking or lighting) and the longitudinal axis of the airplane. Angle A on figure A10-2 depicts the steering angle. All longitudinal distances are measured parallel to the airplane's longitudinal axis. Press F10 when the data items are updated.

(2) Subdivide the taxiway/taxilane centerline into sections (tangent, circular, and spiral). Select the type of section 1 and update the data items for section 1. Except for the last section, press F10 when the data items are updated. For the last section, press F2 when the data items are updated. When F10 is pressed, select the type of the next section and update the data items for that section. When F2 is pressed, enter the station interval and the file name, preview the output file, and press <—┘ or Esc to end the preview.

c. Subtask 6 creates a HP 7440A ColorPro plotter (HPGL) offset distance file with a PLT extension. To create this file, select subtask 6, retrieve a file created with subtask 2 through 5, enter the output file name, and press <—┘ or Esc to end the preview section. The HPGL files are loadable into WordPerfect, Microsoft Word, and other CAD/CAM systems.

d. Subtask 7 creates a Design CAD2D offset distance file with a PD1 extension. To create this file, select subtask 7, retrieve a file created with subtask 2 through 5, enter the output file name, and press <—┘ or

Esc to end the preview section. The PD1 file are loadable into Design CAD2D or Prodesign II.

e. Subtasks 8, 9, and 0 create DOS text files of the centerline, left offset, and right offset X, Y coordinates. To create these files, select subtask 8, 9, or 0, retrieve a file created with subtask 2 through 5, enter the output file name, and press <—┘ or Esc to end the preview section.

f. Subtask A creates a file in the AutoCAD Drawing Interchange file format (DXF) from a subtask 2 through 5 file. To create this file, select subtask A, retrieve a file created with subtask 2 through 5, enter the output file name, and press <—┘ or Esc to end the preview section.

g. To familiarize yourself with the taxiway design task, design the taxiway pavement fillet depicted in figure 4-4 and the exit taxiway depicted in figure 4-13.

11. AIRPORT CAPACITY AND DELAY FOR LONG RANGE PLANNING. Task 5 from the airport capacity and delay for long range planning task selection window approximates the airport capacity and delay. Press F2 to save the approximations. Refer to AC 150/5060-5, Airport Capacity and Delay, for details on airport capacity and delay. Import graphics file HELPE.PLT or HELPM.PLT into WordPerfect or Microsoft Word and print to obtain a hard copy of the runway-use configuration sketches.

12. DECLARED DISTANCE LENGTHS. Task 6 from the airport design task selection window calculates the declared distance lengths. See appendix 14 for details on declared distances. Declared distance lengths may be calculated for standard or modified RSA and ROFA lengths. Press W within task 6 to alternate between the standard and the modified RSA and ROFA lengths applications. Figure A11-11 depicts the nomenclature used in this task.

a. The declared distance lengths obtained from the standard RSA and ROFA lengths application are displayed to scale on the screen except for the ARC C-III and D-III runway widths, and the ARC D-1 through D-VI+ RSA widths. Go to task 1 and enter the 150,000 pounds (68 100 kg) weight entry to display the ADG C-III and D-III runway width to scale and enter the airport elevation to display the ADG D-I through D-VI+ RSA width to scale.

b. The declared distance lengths obtained from the modified RSA and ROFA lengths are displayed to scale by setting items A through D for the standard RSA and ROFA length application, as above, and then switching to the modified RSA and ROFA length application.

c. The dashed lines display the clearway. When present, the clearway extends between the TORA far end and the TODA far end. (The dotted lines display FAR Part 77 primary and approach surfaces and are provided for informational purposes only. The primary surface extends out to 200 feet (60 m) beyond the runway ends or out to the far ends of TODA, whichever is further.)

d. Items A through D on the modified RSA and ROFA lengths application. Enter the RSA and ROFA lengths which will exist beyond the end of the ASDA and the LDA when the ASDA and the LDA end at or prior to the end of the runway or the RSA and ROFA lengths which will exist beyond the end of ASDA when the LDA terminates at the runway end and the ASDA extends onto a stopway.

e. Item E. Enter the runway length from runway end to runway end. The area behind a threshold which is used for TORA in at least one direction or for LDA from the opposite direction is runway. The area behind a threshold which is used for ASDA from the opposite direction is either runway or stopway. The area behind a threshold which is used for TODA from the opposite direction is runway and/or clearway. The clearway may be located above a runway or stopway. The runway length is the same for both directions.

f. Items F and G. Enter 0 feet for runway ends without a stopway.

g. Items H and I. Enter 0 feet for runway ends without a clearway.

h. Items N and O. Enter 0 feet for runway ends without displaced threshold.

i. Items P and Q. Enter 0 feet for runway ends without displaced start of takeoff.

j. Items R and S. Enter 0 feet for runways without displaced clearway. Items R and S may not be longer than the clearway length items H and I.

k. Items T and U. Enter a negative (-) distance for runways extending into the departure runway 6protection zone (RPZ).

13. INPUT AIRPLANE DATA AVAILABILITY. Figure A11-2 provides estimated airplane data for which calculated data is not available in appendixes 12 or 13.

Figure A11-1. THIS FIGURE INTENTIONALLY LEFT BLANK

Airplane	Airport Reference Code	OFZ-N		OFZ-CL		C-NG		MU-W	
		feet	(m)	feet	(m)	feet	(m)	feet	(m)
A 300-600	C-IV	19.4	5.91	54.7	16.67	13.3	4.05	23.8	7.25
A 320	C-III	14.5	4.42	39.1	11.92	8.5	2.59	14.5	4.42
ATR-42,-200,-300	B-III	7.8	2.38	27.0	8.23	-1.0	-0.30	1.4	0.43
BAe 146-100	B-III	9.0	2.74	33.2	10.12	-2.5	-0.76	6.2	1.89
Beechcraft 95	B-I	4.7	1.43	10.1	3.08	-5.6	-1.71	1.5	0.46
Beechcraft 1900	B-II	6.2	1.89	18.0	5.49	-7.3	-2.23	0.5	0.15
Beechcraft C99	B-I	5.2	1.58	14.4	4.39	-10.4	-3.17	1.0	0.30
Boeing 707-320	C-IV	13.0	3.96	42.1	12.83	10.0	3.05	31.8	9.69
Boeing 727-200	C-III	12.0	3.66	38.0	11.58	6.9	2.10	21.5	6.55
Boeing 737-200	C-III	11.8	3.60	37.3	11.37	4.8	1.46	13.4	4.08
Boeing 747-400	D-V	25.4	7.74	64.3	19.60	7.7	2.35	57.5	17.53
Boeing 747-SP	C-V	24.9	7.59	65.8	20.10	5.0	1.52	54.0	16.46
Boeing 757-200	C-IV	17.0	5.18	45.1	13.75	12.0	3.66	17.0	5.18
Boeing 767-200	C-IV	18.5	5.64	52.9	16.12	7.5	2.29	28.8	8.78
Boeing 767-300	C-IV	18.5	5.64	52.6	16.03	7.5	2.29	28.8	8.78
C-130 H	C-IV	10.9	3.32	39.4	12.01	3.1	0.94	3.3	1.01
CASA CN-235	B-III	8.3	2.53	26.8	8.17	1.3	0.40	2.1	0.64
Dash 7	A-III	7.5	2.29	31.0	9.45	-2.3	-0.70	1.7	0.52
Dash 8-300	A-III	7.5	2.29	28.9	8.81	-3.4	-1.04	2.1	0.64
DC-8-43	C-IV	13.4	4.08	43.4	13.23	6.0	1.83	26.7	8.14
DC-8-55	C-IV	13.4	4.08	43.4	13.23	6.0	1.83	26.7	8.14
DC-8-63/73	D-IV	13.4	4.08	43.0	13.11	6.0	1.83	26.7	8.14
DC-9-32	C-III	10.7	3.26	31.0	9.45	-2.0	-0.61	11.5	3.51
DC-10-10	C-IV	18.0	5.49	58.4	17.80	20.9	6.37	32.8	10.00
Embraer EMB-110	B-II	6.9	2.10	16.5	5.03	-2.0	-0.61	1.5	0.46
Fokker F-27,-200	B-III	7.6	2.32	28.7	8.75	-4.1	-1.25	2.0	0.61
Fokker F-28,-3000	C-III	11.3	3.44	30.2	9.20	4.4	1.34	9.8	2.99
Gulfstream III	D-II	10.2	3.11	29.2	8.90	-1.5	-0.46	13.2	4.02
JetStar II	C-II	6.6	2.01	20.4	6.22	6.0	1.83	9.5	2.90
L-1011-1,-100,-20	C-IV	20.4	6.22	55.8	17.01	21.9	6.68	36.6	11.16
L-1011-500	D-IV	20.4	6.22	55.8	17.01	21.9	6.68	28.8	8.78
MD-11	D-IV	21.3	6.49	58.8	17.92	20.9	6.37	38.9	11.86
MD-81,-82,-83,-88	C-III	9.8	2.99	34.2	10.42	-1.8	-0.55	13.8	4.21
MD-87	C-III	10.4	3.17	34.8	10.61	-1.8	-0.55	15.0	4.57
SAAB/Fairchild	B-II	9.1	2.77	21.7	6.61	-0.9	-0.27	2.2	0.67
SAAB SF 340 A	B-II	8.8	2.68	23.3	7.10	-1.5	-0.46	2.0	0.61
Shorts 330-200	B-II	6.6	2.01	19.4	5.91	-2.1	-0.64	2.5	0.76
Shorts 360-300	B-II	6.3	1.92	23.8	7.25	-2.0	-0.61	3.0	0.91
Westwind 1124	C-I	7.0	2.13	15.8	4.82	-4.3	-1.31	4.4	1.34

OFZ-N: OFZ height at nose of airplane holding clear of OFZ (airplane perpendicular to runway centerline).

OFZ-CL: OFZ height at centerline of airplane taxiing clear of OFZ (airplane parallel to runway centerline).

C-NG: Center of airplane cockpit to nosewheel.

MU-W: Longitudinal distance from main undercarriage to wingtip.

Figure A11-2. Estimated airplane data elements for input in the computer program

```
N       RUNWAY AND TAXIWAY WIDTH AND CLEARANCE STANDARD DIMENSIONS

                AIRPORT DESIGN AIRPLANE AND AIRPORT DATA

A  Aircraft Approach Category C
B  Airplane Design Group III
C  Airplane wingspan . . . . . . . . . . . . . . . . . . . . . . . . 107.85 feet
D  Primary runway end is precision instrument  1/2 statute mile or less
E  Other runway end is visual

G  Airplane maximum certificated takeoff weight is over 150,000 lbs
H  Airplane wheelbase is less than 60 feet
I  Airplane undercarriage width (1.15 x main gear track)  . . . .   19.17 feet
J  Airport elevation  . . . . . . . . . . . . . . . . . . . . . .       0 feet
K  Airplane tail height . . . . . . . . . . . . . . . . . . . . . .  30.00 feet

F2 Calculate airport design standard dimensions for the above airport
```

Figure A11-3. Example of the airport design airplane and airport data window

```
                AIRPORT DESIGN AIRPLANE AND AIRPORT DATA

Aircraft Approach Category C
Airplane Design Group III
Airplane wingspan . . . . . . . . . . . . . . . . . . . . . . . . 107.85 feet
Primary runway end is precision instrument  1/2-statute mile or less
Other runway end is visual
Airplane maximum certificated takeoff weight is over 150,000 lbs
Airplane wheelbase is less than 60 feet
Airplane undercarriage width (1.15 x main gear track) . . .   19.17 feet
Airport elevation . . . . . . . . . . . . . . . . . . . . . .      0 feet
Airplane tail height  . . . . . . . . . . . . . . . . . . . .  30.00 feet

          RUNWAY AND TAXIWAY WIDTH AND CLEARANCE STANDARD DIMENSIONS

                                                        Airplane  Group/ARC
Runway centerline to parallel runway centerline simultaneous operations
   when wake turbulence is not treated as a factor:

   VFR operations . . . . . . . . . . . . . . . . . . . . . . . . .   700 feet
   VFR operations with intervening taxiway  . . . . . . . . . . . .   800 feet
   VFR operations with two intervening taxiways . . . . . . . . . .   952 feet
   IFR approach and departure with approach to near threshold  2500 feet less
      100 ft for each 500 ft of threshold stagger to a minimum of 1000 ft.

Runway centerline to parallel runway centerline simultaneous operations
   when wake turbulence is a factor:

   VFR operations . . . . . . . . . . . . . . . . . . . . . . . . .  2500 feet
   IFR departures . . . . . . . . . . . . . . . . . . . . . . . . .  2500 feet
   IFR approach and departure with approach to near threshold . .   2500 feet
   IFR approach and departure with approach to far threshold  2500 feet plus
      100 feet for each 500 feet of threshold stagger.
   IFR approaches . . . . . . . . . . . . . . . . . . . . . . . . .  3400 feet

Runway centerline to parallel taxiway/taxilane centerline . 303.9    400 feet
Runway centerline to edge of aircraft parking . . . . . . . 400.0    500 feet
```

Figure A11-4. Example printout of width and clearance standard dimensions page 1

Taxiway centerline to parallel taxiway/taxilane centerline	139.4	152 feet
Taxiway centerline to fixed or movable object	85.5	93 feet
Taxilane centerline to parallel taxilane centerline	128.6	140 feet
Taxilane centerline to fixed or movable object	74.7	81 feet

Runway protection zone at the primary runway end:

Length	2500 feet
Width 200 feet from runway end	1000 feet
Width 2700 feet from runway end	1750 feet

Runway protection zone at other runway end:

Length	1000 feet
Width 200 feet from runway end	1000 feet
Width 1200 feet from runway end	1100 feet

Departure runway protection zone:

Length	1700 feet
Width 200 feet from the far end of TORA	500 feet
Width 1900 feet from the far end of TORA	1010 feet

Runway obstacle free zone (OFZ) width	400.0	400 feet
Runway obstacle free zone length beyond each runway end		200 feet
Approach obstacle free zone width	400.0	400 feet
Approach obstacle free zone length beyond approach light system .		200 feet
Approach obstacle free zone slope from 200 feet beyond threshold		50:1
Inner-transitional surface obstacle free zone slope		3:1
Runway width		150 feet
Runway shoulder width		25 feet
Runway blast pad width		200 feet
Runway blast pad length		200 feet
Runway safety area width		500 feet
Runway safety area length beyond each runway end or stopway end, whichever is greater		1000 feet
Runway object free area width		800 feet
Runway object free area length beyond each runway end or stopway end, whichever is greater		1000 feet
Clearway width		500 feet
Stopway width		150 feet
Taxiway width	39.2	50 feet
Taxiway edge safety margin		10 feet
Taxiway shoulder width		20 feet
Taxiway safety area width	107.8	118 feet
Taxiway object free area width	171.0	186 feet
Taxilane object free area width	149.4	162 feet
Taxiway wingtip clearance	31.6	34 feet
Taxilane wingtip clearance	20.8	22 feet

Threshold surface at primary runway end:

Distance out from threshold to start of surface	200 feet
Width of surface at start of trapezoidal section	1000 feet
Width of surface at end of trapezoidal section	4000 feet
Length of trapezoidal section	10000 feet
Length of rectangular section	0 feet
Slope of surface	34:1

Threshold surface at other runway end:

Distance out from threshold to start of surface	0 feet
Width of surface at start of trapezoidal section	400 feet
Width of surface at end of trapezoidal section	1000 feet
Length of trapezoidal section	1500 feet
Length of rectangular section	8500 feet
Slope of surface	20:1

REFERENCE: AC 150/5300-13, AIRPORT DESIGN.

Figure A11-5. Example printout of width and clearance standard dimensions page 2

WIND OBSERVATIONS

STATION: ANYWHERE, USA
RUNWAY ORIENTATION: 105.00 195.00 DEGREE
CROSSWIND COMPONENT: 10.50 10.50 KNOTS
TAILWIND COMPONENT: 60.00 60.00 KNOTS
WIND COVERAGE: 98.84 %

HOURLY OBSERVATIONS OF WIND SPEED (KNOTS)

DIRECTION	0-3	4-6	7-10	11-16	17-21	22-27	28-33	34-40	41 OVER	TOTAL
1	469	842	568	212	0	0	0	0	0	2091
2	568	1263	820	169	0	0	0	0	0	2820
3	294	775	519	73	9	0	0	0	0	1670
4	317	872	509	62	11	0	0	0	0	1771
5	268	861	437	106	0	0	0	0	0	1672
6	357	534	151	42	8	0	0	0	0	1092
7	369	403	273	84	36	10	0	0	0	1175
8	158	261	138	69	73	52	41	22	0	814
9	167	352	176	128	68	59	21	0	0	971
10	119	303	127	180	98	41	9	0	0	877
11	323	586	268	312	111	23	28	0	0	1651
12	618	1397	624	779	271	69	21	0	0	3779
13	472	1375	674	531	452	67	0	0	0	3571
14	647	1377	574	281	129	0	0	0	0	3008
15	338	1093	348	135	27	0	0	0	0	1941
16	560	1399	523	121	19	0	0	0	0	2622
17	587	883	469	128	12	0	0	0	0	2079
18	1046	1984	1068	297	83	18	0	0	0	4496
19	499	793	586	241	92	0	0	0	0	2211
20	371	946	615	243	64	0	0	0	0	2239
21	340	732	528	323	147	8	0	0	0	2078
22	479	768	603	231	115	38	19	0	0	2253
23	187	1008	915	413	192	0	0	0	0	2715
24	458	943	800	453	96	11	18	0	0	2779
25	351	899	752	297	102	21	9	0	0	2431
26	368	731	379	208	53	0	0	0	0	1739
27	411	748	469	232	118	19	0	0	0	1997
28	191	554	276	287	118	0	0	0	0	1426
29	271	642	548	479	143	17	0	0	0	2100
30	379	873	526	543	208	34	0	0	0	2563
31	299	643	597	618	222	19	0	0	0	2398
32	397	852	521	559	158	23	0	0	0	2510
33	236	721	324	238	48	0	0	0	0	1567
34	280	916	845	307	24	0	0	0	0	2372
35	252	931	918	487	23	0	0	0	0	2611
36	501	1568	1381	569	27	0	0	0	0	4046
0	7729	0	0	0	0	0	0	0	0	7729
TOTAL:	21676	31828	19849	10437	3357	529	166	22	0	87864

Figure A11-6. Example printout of wind analysis (two bi-directional runways)

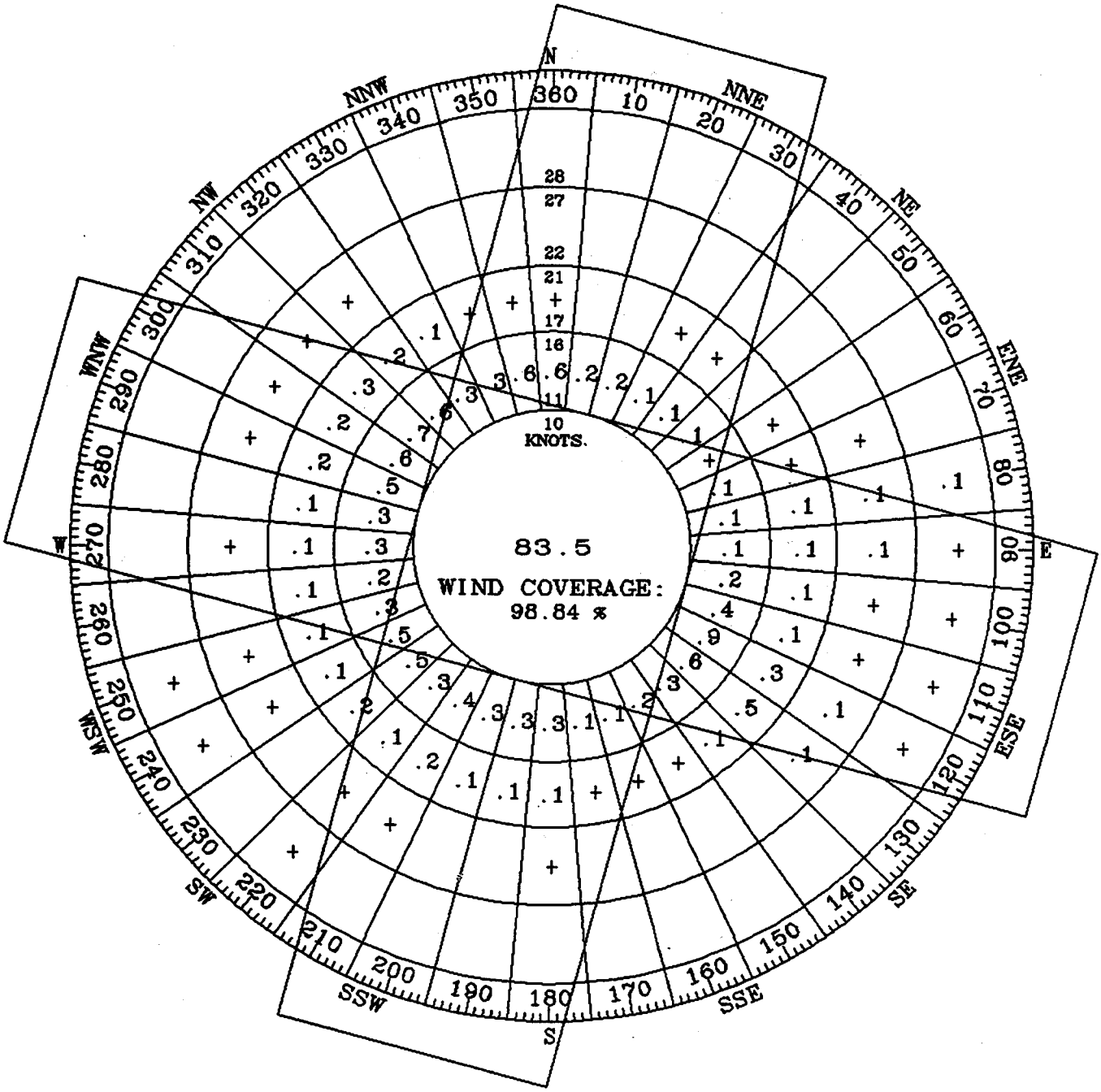

Figure A11-7. Example printout of windrose (two bi-directional runways)

WIND OBSERVATIONS

STATION: ANYWHERE, USA
RUNWAY ORIENTATION: 105.00 DEGREE
CROSSWIND COMPONENT: 13.00 KNOTS
TAILWIND COMPONENT: 5.00 KNOTS
WIND COVERAGE: 80.41 %

	HOURLY OBSERVATIONS OF WIND SPEED (KNOTS)								41	
	0-3	4-6	7-10	11-16	17-21	22-27	28-33	34-40	OVER	TOTAL
					DIRECTION					
1	469	842	568	212	0	0	0	0	0	2091
2	568	1263	820	169	0	0	0	0	0	2820
3	294	775	519	73	9	0	0	0	0	1670
4	317	872	509	62	11	0	0	0	0	1771
5	268	861	437	106	0	0	0	0	0	1672
6	357	534	151	42	8	0	0	0	0	1092
7	369	403	273	84	36	10	0	0	0	1175
8	158	261	138	69	73	52	41	22	0	814
9	167	352	176	128	68	59	21	0	0	971
10	119	303	127	180	98	41	9	0	0	877
11	323	586	268	312	111	23	28	0	0	1651
12	618	1397	624	779	271	69	21	0	0	3779
13	472	1375	674	531	452	67	0	0	0	3571
14	647	1377	574	281	129	0	0	0	0	3008
15	338	1093	348	135	27	0	0	0	0	1941
16	560	1399	523	121	19	0	0	0	0	2622
17	587	883	469	128	12	0	0	0	0	2079
18	1046	1984	1068	297	83	18	0	0	0	4496
19	499	793	586	241	92	0	0	0	0	2211
20	371	946	615	243	64	0	0	0	0	2239
21	340	732	528	323	147	8	0	0	0	2078
22	479	768	603	231	115	38	19	0	0	2253
23	187	1008	915	413	192	0	0	0	0	2715
24	458	943	800	453	96	11	18	0	0	2779
25	351	899	752	297	102	21	9	0	0	2431
26	368	731	379	208	53	0	0	0	0	1739
27	411	748	469	232	118	19	0	0	0	1997
28	191	554	276	287	118	0	0	0	0	1426
29	271	642	548	479	143	17	0	0	0	2100
30	379	873	526	543	208	34	0	0	0	2563
31	299	643	597	618	222	19	0	0	0	2398
32	397	852	521	559	158	23	0	0	0	2510
33	236	721	324	238	48	0	0	0	0	1567
34	280	916	845	307	24	0	0	0	0	2372
35	252	931	918	487	23	0	0	0	0	2611
36	501	1568	1381	569	27	0	0	0	0	4046
0	7729	0	0	0	0	0	0	0	0	7729
TOTAL:	21676	31828	19849	10437	3357	529	166	22	0	87864

Figure A11-8. Example printout of wind analysis (one uni-directional runway)

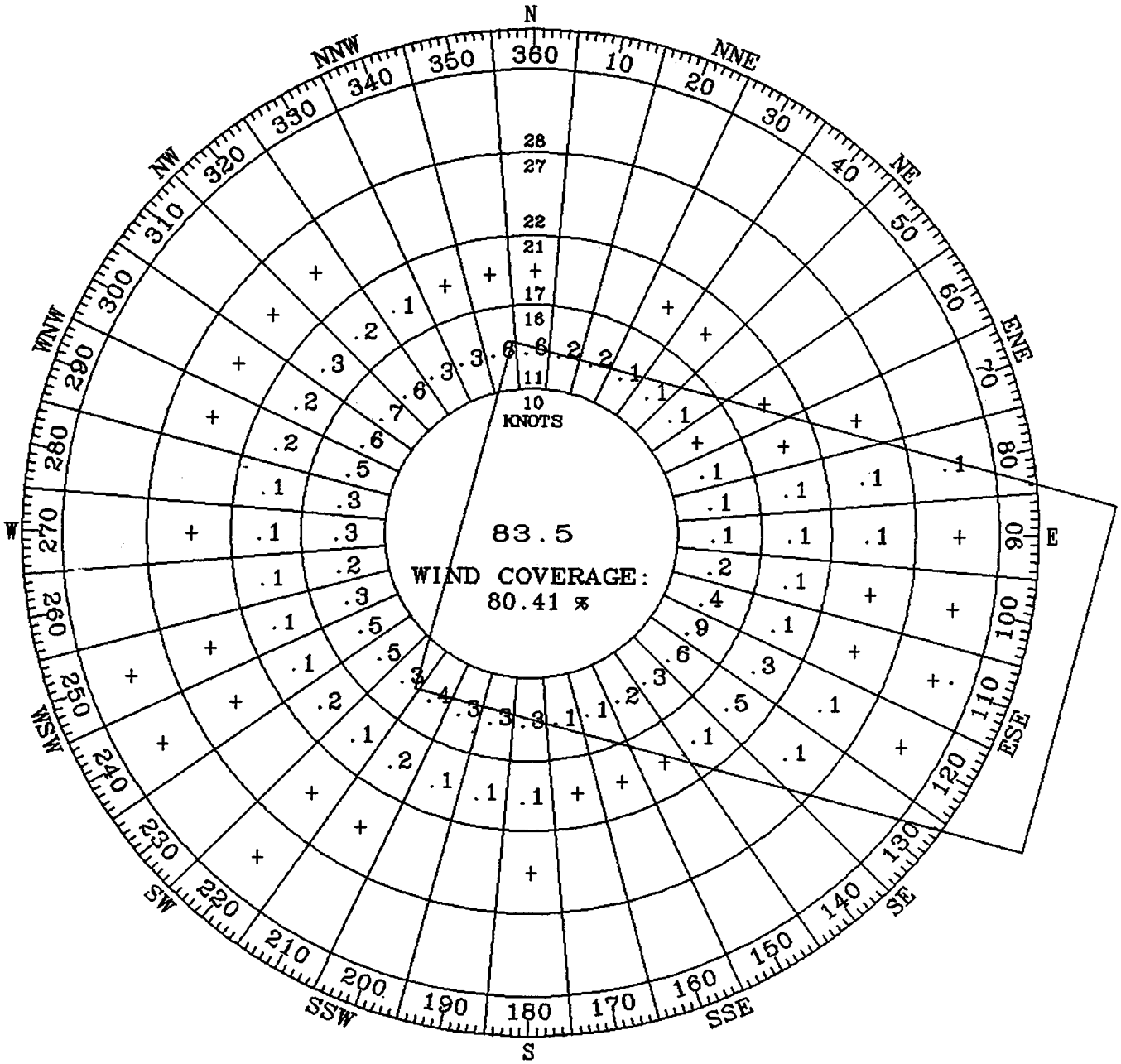

Figure A11-9. Example printout of windrose (one uni-directional runway)

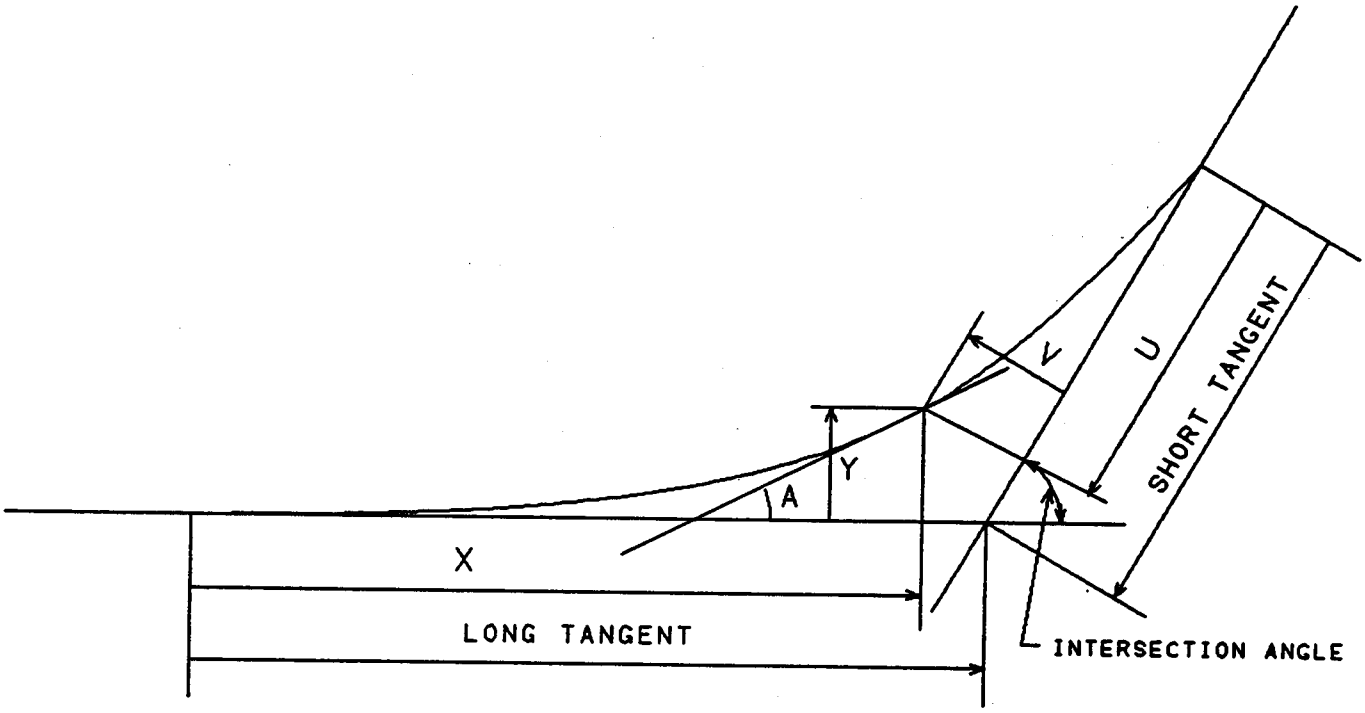

Figure A11-10. Nomenclature used in the taxiway design task

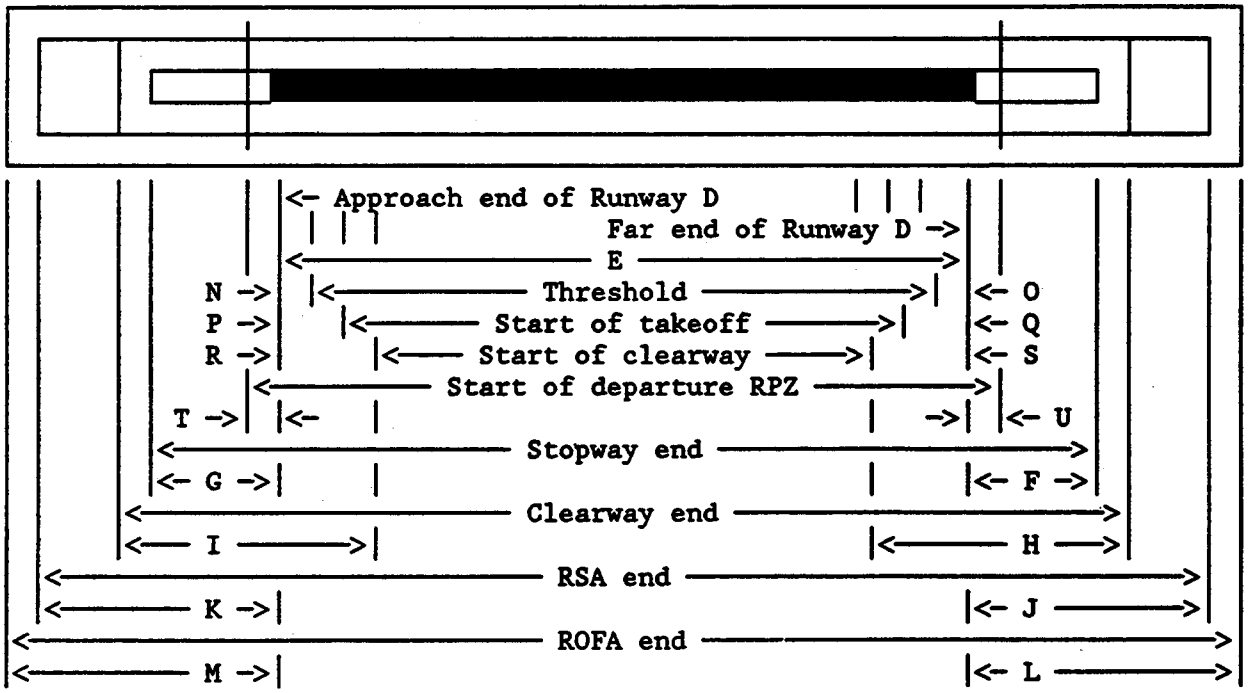

Figure A11-11. Nomenclature used in the declared distance task

Appendix 12. AIRPLANE DATA

1. BACKGROUND.

a. Airplane physical characteristics have operational and economic significance which materially affect an airport's design, development, and operation. Their consideration when planning a new airport or improving existing airport facilities maximizes their possible utilization and safety within expected demands. For example, they influence the design aspects of runways, taxiways, ramps, aprons, servicing facilities, gates, and life safety facilities. In addition, airport designers should consider anticipated growth in air traffic and the effects of near future model airplane operating weights and physical dimensions on ground operating areas.

b. Military airplanes frequently operate at civil airports. Joint-use airports should also meet the physical characteristics of military airplanes. Hence, during airport facility design, consider routine military operations such as medical evacuation, strategic deployment and dispersal, and Reserve and National Guard training missions.

c. Civil airplane versions of military counterparts are shown below.

MILITARY DESIGNATION	CIVIL DESIGNATION
C-7	DeHavilland Caribou
C-9A	McDonnell Douglas DC-9-30
C-12	Beech Huron
C-45	Twin Beech 18
C-46	Curtis-Wright Commando
C-47/R-5D	Douglas DC-3, Skytrain
C-54/R-4D	Douglas DC-4, Skymaster
C-97	Boeing Stratocruiser
C-118/R-6D	Douglas DC-6, Liftmaster
C-119	Fairchild/Republic Flying Box Car
C-121/R-7	Lockheed 749, 1049 Constellation
C-123	Fairchild/Republic Provider
C-130	Lockheed L-382 Hercules
C-131, T-29	Convair 240/340/580
C-135	Boeing 707-120B, Starlifter
C-137, VC-137B, C	Boeing 707-320B
C-140	Lockheed 1329 JetStar
C-141	Lockeed StarLifter
E-4	Boeing 747-200B
KC-10A	McDonnell Douglas, DC-10-30CF, Extender
KC-135A	Boeing 707, Stratotanker
P-3	Lockheed L-188 Electra, 185/285 Orion
T-34	Beech Mentor
T-37	Cessna 318
T-39	Rockwell International NA-265-40 Sabreliner
T-42	Beech Cochise
T-43A	Boeing 737-200
T-47A	Cessna 552
U-3	Cessna 310/T310
U-9	Aero Commander 560
U-18	DeHavilland Twin Otter

2. EXPLANATORY INFORMATION.

a. Presentation of data is in three forms:

(1) Figures A12-1 to A12-8 are representatives of general types of airplanes and not a specific model.

(2) Most figures illustrate a particular model with its specific data.

(3) Some figures present data for several similar models or series of airplanes by a single representative drawing (e.g., General Dynamics/Convair 880 and 990).

b. The alpha-symbols in the data tables and drawings use the following list of airplane physical characteristics:

Alpha-Symbol	Airplane Physical Characteristics
A	Wingspan
B	Length Overall
C	Height Overall
D	Wheelbase
E	Nose to centerline of main gear
F	Wheel track (tread)
G	Centerline of fuselage to centerline of inboard engine
H	Centerline of fuselage to centerline of outboard engine
J	Outside of main gear to wingtip
K	Vertical clearance of inboard engine or propeller at maximum weight
L	Vertical clearance of outboard engine or propeller at maximum weight
M	Centerline of fuselage to approximate pivot point based on maximum nosewheel steering angle or locked wheels
N	Vertical clearance of wingtip at maximum weight
P	Height of exhaust of jet engine on centerline of fuselage (three-engine jet airplane only)

c. Measurement of turn radius is either at maximum nosewheel steering angle or with locked wheels, whichever produces the larger radius. It is a horizontal measurement from the pivot point to the farthest point of the airplane during execution of a turn. This dimension represents a maximum effort maneuver not normally used by the airlines due to excessive tire wear. THIS DIMENSION IS NOT FOR AIRPORT FACILITY DESIGN PURPOSES. Contact the airline(s) involved for the turn radius to use for design purposes.

d. The abbreviation "SRS" denotes "series."

e. The abbreviation "NA" denotes "datum is not available."

f. The weight and dimensional information for transport type airplanes are from aircraft manufacturer publications titled "Airplane Characteristics, Airport Planning." Each airplane model has a publication that is available from its manufacturer. Since each publication has considerably more information of interest to an airport designer than assembled in this advisory circular, revisions are frequent. For example, weight and dimensional data is subject to change as a result of modifications and improvements to the airplane that differs from this advisory circular. Hence, it is advisable during airport facility planning and design to contact manufacturers of applicable airplanes.

BUILDER	MODEL	NAME	MAXIMUM TAKEOFF WEIGHT	MAXIMUM LANDING WEIGHT	A	B	C	D	F	NUMBER SEATS	TURN RADIUS
BELLANCA	7	CITABRIA	1,650 LB 748 KG	1,650 LB 748 KG	33'5" 10.19M	22'8" 6.91M	6'8" 2.03M	16'1" 4.90M	6'4" 1.93M	2	
CESSNA	120 140		1,450 LB 658 KG	1,450 LB 658 KG	32'10" 10.00M	21'0" 6.40M	6'3" 1.91M		6'5" 1.96M	2	
	170		2,200 LB 998 KG	2,200 LB 998 KG	36'0" 10.97M	25'0" 7.60M	6'7" 2.00M			4	
	180 185	SKYWAGON	2,800 LB 1 270 KG	2,800 LB 1,270 KG	36'2" 11.04M	25'9" 7.85M	7'9" 2.34M		7'8" 2.31M	4	21'10" 6.65M
	190 195		3,350 LB 1 520 KG	3,350 LB 1,520 KG	36'2" 11.04M	27'1" 8.26M	7'2" 2.16M			4	
HELIO AIRCRAFT	H-250 H-295	HELIO COURIER	3,400 LB 1,542 KG	3,400 LB 1,542 KG	39'0" 10.87M	31'6" 9.59M	8'10" 2.70M	23'5" 7.22M	9'0" 2.75M	6	
	HST-550	HELIO STALLION	5,000 LB 2 268 KG	5,100 LB 2,313 KG	41'0" 12.49M	39'7" 11.04M	9'3" 2.83M		9'8" 2.96M	11	

MODEL 185 HAS MAXIMUM WEIGHTS OF 3,350 LB (1 520 KG) AND 6 SEATS.
MODEL 195 HAS LENGTH OF 27'4" (8.33M).

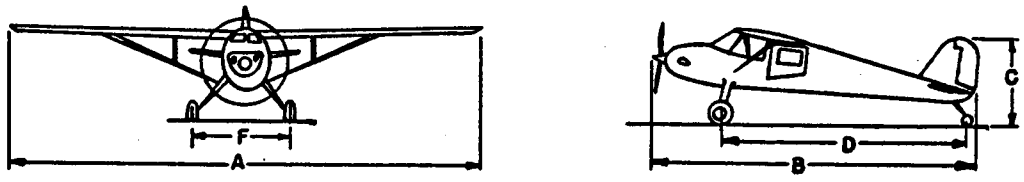

Figure A12-1. Single engine, high wing, tailwheel airplanes 8,000 lb. (3,628 Kg) or less

BUILDER	MODEL	NAME	MAXIMUM TAKEOFF WEIGHT	MAXIMUM LANDING WEIGHT	A	B	C	D	F	NUMBER SEATS	TURN RADIUS
PIPER	PA-12, 14, 15	SUPER CRUISER	1,750 LB 794 KG	1,750 LB 794 KG	35'6" 10.80M	22'6" 6.85M	6'10" 2.08M		6'3" 1.91M	3	20'8" 6.29M
	PA-18	SUPER CUB	1,500 LB 680 KG	1,500 LB 680 KG	35'3" 10.72M	22'5" 6.83M	6'8" 2.03M			2	20'7" 2.26M
	PA-20	PACER	1,650 LB 748 KG	1,650 LB 748 KG	29'4" 8.90M	20'5" 6.20M	6'3" 1.91M			4	
SILVAIRE	8		1,400 LB 635 KG	1,400 LB 635 KG	35'0" 10.67M	20'0" 6.10M	6'3" 1.91M		6'4" 1.93M	2	
TAYLOR-CRAFT	BC-12		1,150 LB 522 KG	1,150 LB 522 KG	36'0" 10.97M	22'0" 6.72M	6'8" 2.03M		6'0" 1.83M	2	
UNIVAIR AIRCRAFT	108	VOYAGER	2,150 LB 975 KG	2,150 LB 975 KG	33'11" 10.34M	24'6" 7.46M	6'10" 2.08M	18'7" 5.66M	7'1" 2.16M	4	20'6" 2.24M

NOTE: MODEL PA-20 MAY HAVE MAXIMUM WEIGHTS OF 1,800 LB (816 KG).

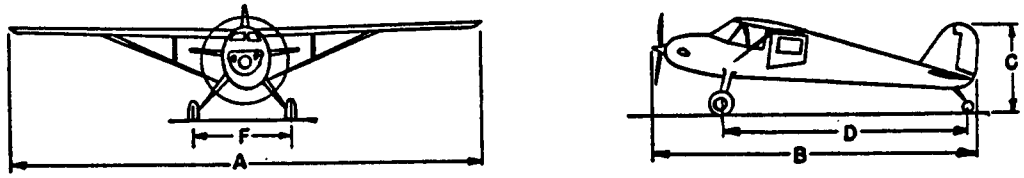

Figure A12-2. Single engine, high wing, tailwheel airplanes 8,000 lb. (3,628 Kg) or less (cont'd)

BUILDER	MODEL	NAME	MAXIMUM TAKEOFF WEIGHT	MAXIMUM LANDING WEIGHT	A	B	C	D	F	NUMBER SEATS	TURN RADIUS
BEDE AIRCRAFT	BD-4		1,400 LB 635 KG	1,400 LB 635 KG	25'6" 7.77M	21'11" 6.68M	6'3" 1.91M		8'3" 2.51M	4	
CESSNA	150		1,600 LB 726 KG	1,600 LB 726 KG	32'9" 9.98M	23'10" 7.26M	8'0" 2.44M	4'10" 1.48M	6'7" 2.01M	2	19'10" 6.05M
	172	SKYHAWK	2,300 LB 1 043 KG	2,300 LB 1 043 KG	35'10" 10.93M	26'11" 8.20M	8'10" 2.84M	5'4" 1.63M	7'2" 2.23M	4	19'8" 6.00M
	177	CARDINAL	2,500 LB 1 134 KG	2,500 LB 1 134 KG	35'6" 10.82M	27'2" 8.28M	8'6" 2.59M	6'5" 1.96M	8'4" 2.54M	4	
	182	SKYLANE	2,950 LB 1 338 KG	2,950 LB 1 338 KG	35'10" 10.93M	28'1" 8.56M	8'11" 2.72M	5'7" 1.70M	8'0" 2.44M	4	21'4" 6.50M
	206	STATIONAIR	3,600 LB 1 633 KG	3,600 LB 1 633 KG	35'10" 10.93M	28'0" 8.53M	9'8" 2.95M	6'11" 2.11M	8'2" 2.49M	6	
	207	SUPER SKYWAGON	3,800 LB 1 724 KG	3,800 LB 1 724 KG	35'10" 10.93M	31'9" 9.68M	9'7" 2.92M		10'0" 3.04M	6	
	210	CENTURION	3,800 LB 1 724 KG	3,800 LB 1 724 KG	36'9" 11.20M	28'3" 8.61M	9'8" 2.95M	5'9" 1.76M	8'6" 2.59M	6	22'5" 6.84M
PIPER	PA-22	TRI-PACER	1,800 LB 816 KG	1,800 LB 816 KG	29'4" 8.97M	20'4" 6.20M	6'3" 1.91M			3	19'11" 6.07M

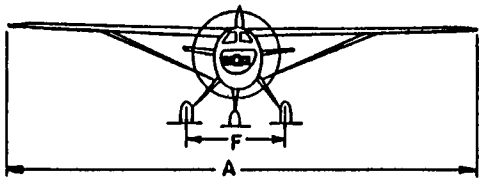

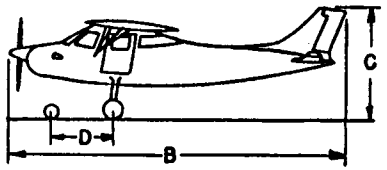

Figure A12-3. Single engine, high wing, tricycle gear airplanes 8,000 lb. (3,628 Kg) or less

BUILDER	MODEL	NAME	MAXIMUM TAKEOFF WEIGHT	MAXIMUM LANDING WEIGHT	A	B	C	D	F	NUMBER SEATS	TURN RADIUS
AEROSTAR AVIATION	415	ERCOUPE	1,450 LB 658 KG	1,450 LB 658 KG	30'0" 9.14M	20'7" 6.27M	6'3" 1.91M	5'4" 1.63M	7'9" 2.36M	2	18'9" 5.71M
	M-20		2,525 LB 1 145 KG	2,525 LB 1 145 KG	35'0" 10.67M	23'7" 7.06M	8'4" 2.54M	5'7" 1.70M	9'1" 2.77M	4	22'1" 6.72M
	M-22	MARK 22	3,680 LB 1 669 KG	3,680 LB 1 669 KG	35'0" 10.67M	27'0" 8.23M	9'10" 3.00M	8'3" 2.51M	11'0" 3.35M	5	
BEECH-CRAFT	23	MUSKETEER	2,450 LB 1 111 KG	2,200 LB 998 KG	32'9" 9.98M	25'0" 7.62M	8'3" 2.51M	6'4" 1.91M	11'10" 3.61M	4	
	V-35B	BONANZA	3,400 LB 1 542 KG	3,400 LB 1 542 KG	33'6" 10.21M	26'5" 8.05M	6'7" 2.01M	7'0" 2.13M	9'7" 2.92M	4	21'6" 6.55M
	F-33	BONANZA	3,050 LB 1 383 KG	3,050 LB 1 383 KG	32'10" 10.00M	25'6" 7.77M	8'3" 2.51M	7'5" 2.26M	9'7" 2.92M	5	21'3" 6.48M
	F-33A	BONANZA	3,400 LB 1 542 KG	3,400 LB 1 542 KG	33'6" 10.21M	26'8" 8.13M	8'3" 2.51M	7'5" 2.26M	9'7" 2.92M	5	21'3" 6.48M
DELLANCA	260 300	VIKING	3,000 LB 1 361 KG	3,000 LB 1 361 KG	24'2" 10.41M	23'6" 7.15M	7'4" 2.23M	6'8" 2.03M	9'0" 2.75M	4	

NOTE: MODEL M-20 MAY BE KNOWN AS: CHAPARRAL, EXECUTIVE, MUSTANG, RANGER, STATESMAN.

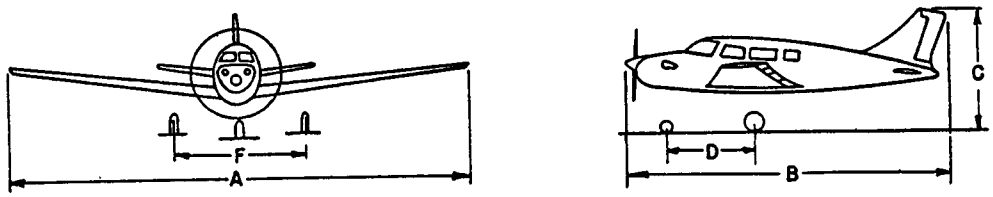

Figure A12-4. Single engine, low wing, tricycle gear airplanes 8,000 lb. (3,628 Kg) or less

BUILDER	MODEL	NAME	MAXIMUM TAKEOFF WEIGHT	MAXIMUM LANDING WEIGHT	A	B	C	D	F	NUMBER SEATS	TURN RADIUS
GRUMMAN	AA-1	YANKEE	1,500 LB 680 KG	1,500 LB 680 KG	24'6" 7.47M	19'3" 5.87M	6'10" 2.08M	4'5" 1.35M	8'3" 2.51M	2	
MAVION	G-1	RANGE-MASTER	3,315 LB 1 504 KG	3,150 LB 1 489 KG	34'9" 10.59M	27'6" 8.38M	8'4" 2.54M	5'8" 1.74M	8'9" 2.67M	4	
PIPER	PA-24	COMMANCHE	2,550 LB 1 157 KG	2,550 LB 1 157 KG	36'0" 10.97M	24'9" 7.54M	7'5" 2.25M	6'7" 2.01M	9'8" 2.94M	4	22'10" 6.96M
	PA-28-180	CHEROKEE	2,400 LB 1 089 KG	2,400 LB 1 089 KG	30'0" 9.14M	23'6" 7.16M	7'4" 2.22M	6'3" 1.89M	10'0" 3.04M	4	20'0" 6.08M
	PA-28-200	CHEROKEE ARROW	2,600 LB 1 179 KG	2,600 LB 1 179 KG	30'0" 9.14M	24'2" 7.37M	8'0" 2.44M	7'5" 2.26M	10'6" 3.20M	5	20'3" 6.17M
	PA-32	CHEROKEE SIX	3,400 LB 1 542 KG	3,400 LB 1 542 KG	32'10" 10.00M	27'9" 8.45M	7'11" 2.41M	7'10" 2.39M	10'7" 3.22M	6	21'9" 6.63M
ROCKWELL INTERNAT.	112		2,475 LB 1 127 KG	2,475 LB 1 127 KG	35'0" 10.67M	27'2" 8.28M	10'1" 3.07M		7'2" 2.18M	4	

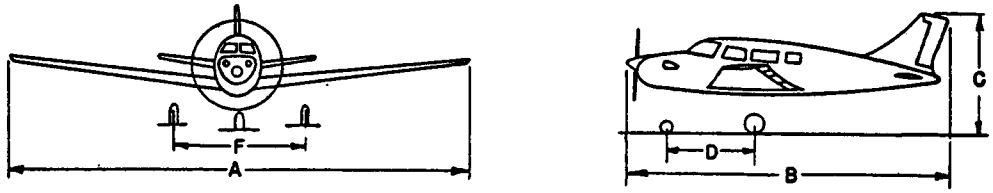

Figure A12-5. Single engine, low wing, tricycle gear airplanes 8,000 lb. (3,628 Kg) or less (cont'd)

BUILDER	MODEL	NAME	MAXIMUM TAKEOFF WEIGHT	MAXIMUM LANDING WEIGHT	A	B	C	D	F	NUMBER SEATS	TURN RADIUS
AEROSTAR AVIATION	600 601	AEROSTAR	5,500 LB 2 495 KG	5,500 LB 2 495 KG	34'3" 10.44M	34'10" 10.62M	12'2" 3.71M		10'3" 3.12M	5	
BEECH-CRAFT	B-55	BARRON	5,100 LB 2 313 KG	5,100 LB 3 313 KG	37'10" 11.53M	28'0" 8.53M	9'2" 2.79M	7'0" 2.13M	7'0" 2.13M	4	23'8" 7.21M
	E-55	BARRON	5,300 LB 2 404 KG	5,300 LB 2 404 KG	37'10" 11.53M	29'0" 8.88M	9'2" 2.79M	8'0" 2.44M	8'0" 2.44M	4	23'8" 7.21M
	B-60	DUKE	6,775 LB 3 073 KG	6,775 LB 3 073 KG	39'3" 11.96M	33'10" 10.32M	12'4" 3.76M	9'3" 2.82M	11'0" 3.35M	6	
CESSNA	310		5,100 LB 2 313 KG	5,100 LB 2 313 KG	37'6" 11.43M	29'7" 9.02M	9'11" 3.03M	9'6" 2.90M	12'0" 3.66M	6	24'0" 7.31M

NOTE: E-55 TURBO HAS MAXIMUM WEIGHTS OF 5,900 LB (2 676 KG).
310 TURBO HAS MAXIMUM WEIGHTS OF 5,500 LB (2 495 KG).

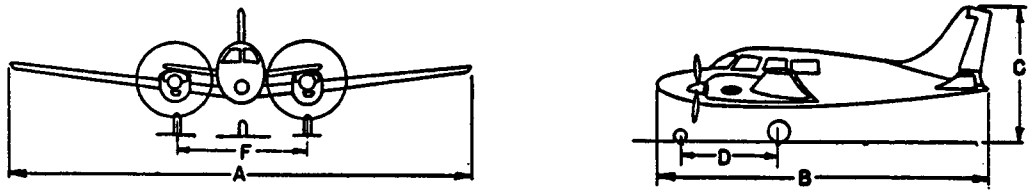

Figure A12-6. Twin engine, low or mid wing, tricycle gear airplanes 8,000 lb. (3,628 Kg) or less

BUILDER	MODEL	NAME	MAXIMUM TAKEOFF WEIGHT	MAXIMUM LANDING WEIGHT	A	B	C	D	F	NUMBER SEATS	TURN RADIUS
CESSNA	401, 402, 421	TWIN CESSNA	6,300 LB 2 858 KG	6,200 LB 2 812 KG	39'10" 12.27M	36'2" 11.02M	11'8" 3.56M	10'6" 3.20M	14'8" 4.47M	6	
PIPER	PA-23-160	APACHE	3,800 LB 1 724 KG	3,800 LB 1 724 KG	37'2" 11.32M	27'5" 8.34M	9'6" 2.87M	7'6" 2.28M	11'0" 3.35M	5	24'0" 7.31M
	PA-23-250	AZTEC	4,800 LB 2 177 KG	4,800 LB 2 177 KG	37'0" 11.27M	27'7" 8.42M	10'4" 3.15M	7'6" 2.28M	11'4" 3.45M	6	24'0" 7.31M
	PA-30	TWIN COMMANCHE	3,600 LB 1 633 KG	3,600 LB 1 633 KG	36'0" 10.97M	25'2" 7.67M	8'3" 2.51M	7'4" 2.23M	9'10" 2.98M	4	22'8" 6.90M
	PA-31	NAVAJO	6,200 LB 2 812 KG	6,200 LB 2 812 KG	40'8" 12.40M	32'8" 9.94M	13'0" 3.96M	8'8" 2.64M	13'9" 4.19M	7	27'3" 8.32M

NOTE: MODEL (421) HAS OPTIONAL TAKEOFF WEIGHT OF 6,350 LB (2 880 KG).
(421B) 7,450 LB (3 379 KG).

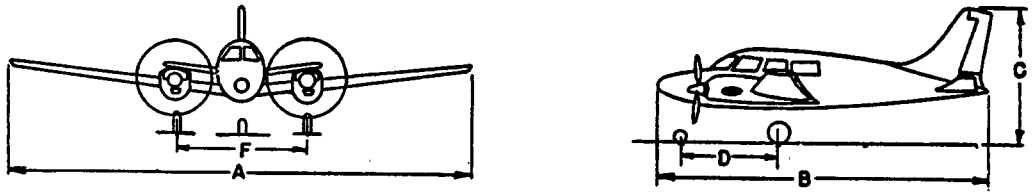

Figure A12-7. Twin engine, low or mid wing, tricycle gear airplanes 8,000 lb. (3,628 Kg) or less (cont,d)

BUILDER	MODEL	NAME	MAXIMUM TAKEOFF WEIGHT	MAXIMUM LANDING WEIGHT	A	B	C	D	F	NUMBER SEATS	TURN RADIUS
CESSNA	336	SUPER	4,630 LB	4,400 LB	38'2"	29'10"	9'4"	7'10"	8'2"	4	
	337	SKYMASTER	2 100 KG	1 996 KG	11.85M	9.10M	2.85M	2.39M	2.48M		
ROCKWELL INTERNAT.	500	AERO COMMANDER	6,500 LB	6,500 LB	49'6"	35'1"	14'6"		12'11"	7	31'2"
			2 948 KG	2 948 KG	15.09M	10.69M	4.42M		3.94M		9.50M
	560, 680	GRAND	7,700 LB	7,700 LB	49'1"	36'7"	14'6"	14'0"	12'11"	7	
	SHRIKE	SHRIKE CDR	3 493 KG	3 493 KG	14.96M	11.15M	4.42M	4.28M	3.94M		

NOTE: SHRIKE COMMANDER HAS MAXIMUM WEIGHTS OF 6,750 LB (3 062 KG).
MODEL 681, TURBO II, HAWK COMMANDER HAS WINGSPAN OF 44'0" (13.41M) AND MAXIMUM WEIGHTS OF 9,400 LB (4 264 KG); OTHERWISE AS MODEL 560.

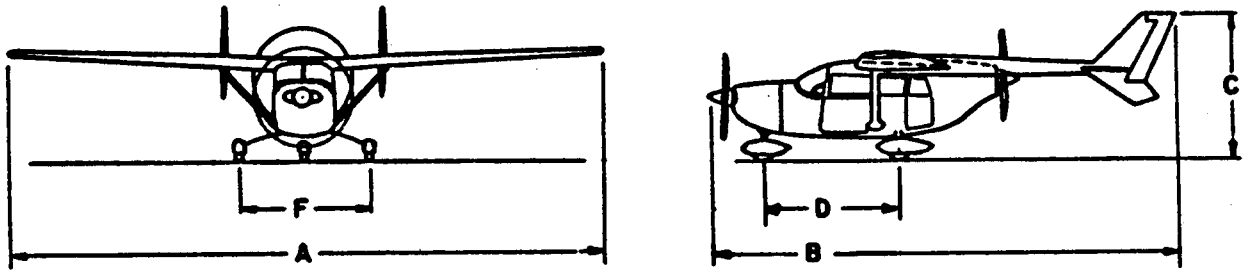

CESSNA SUPER SKYMASTER.

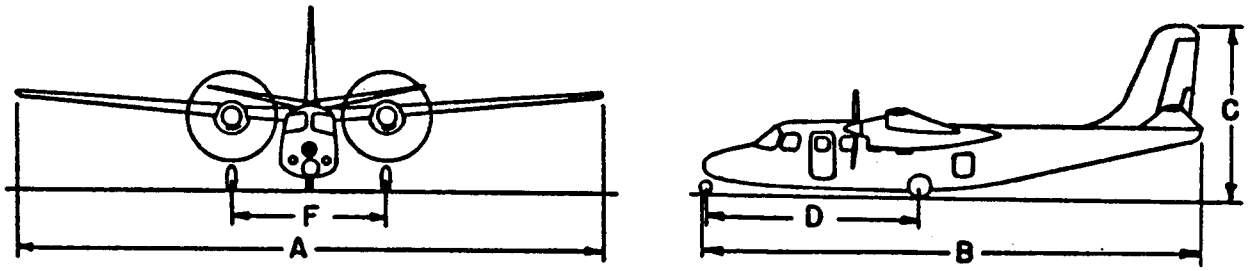

ROCKWELL INTERNATIONAL AERO COMMANDER SERIES.

Figure A12-8. Twin engine, high or mid wing, tricycle gear airplanes 8,000 lb. (3,628 Kg) or less

MODEL	MAXIMUM TAKEOFF WEIGHT	MAXIMUM LANDING WEIGHT	A	B	C	D	E	F	G	J	K	M	N	TURN RADIUS
MOHAWK 298	23,480 LB 10 653 KG	22,710 LB 10 301 KG	71'11" 21.92M	63'4" 19.30M	20'5" 6.22M	23'9" 7.24M	29'9" 9.07M	10'3" 3.12M	9'8" 2.95M	30'5" 9.27M	5'5" 1.65M	5.2" 1.60M	12'6" 3.84M	41'1" 12.52M

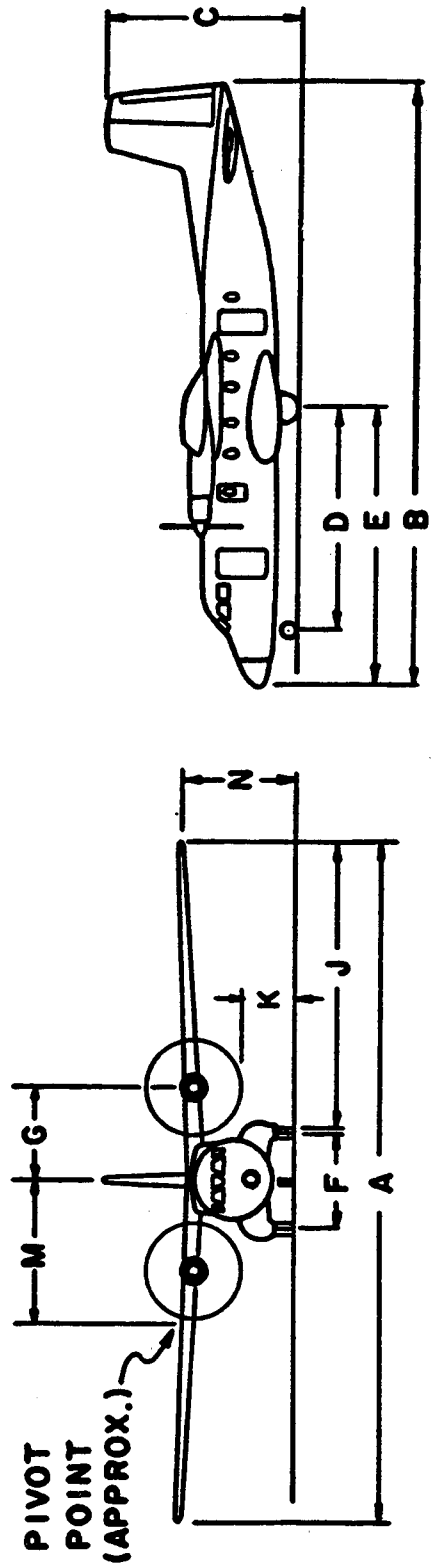

Figure A12-9. Aérospatiale Nord 262

MODEL	MAXIMUM TAKEOFF WEIGHT	MAXIMUM LANDING WEIGHT	A	B	C	D	E	F	G	J	K	M	N	TURN RADIUS
CARAVELLE	114,640 LB 52 000 KG	104,990 LB 47 623 KG	112'6" 34.29M	105'0" 32.00M	28'7" 8.72M	38'6" 11.74M	55'6" 16.92M	17'1" 5.21M	7'10" 2.39M	46'7" 14.20M	7'2" 2.18M	33'2" 10.11M	7'5" 2.26M	90'3" 27.51M

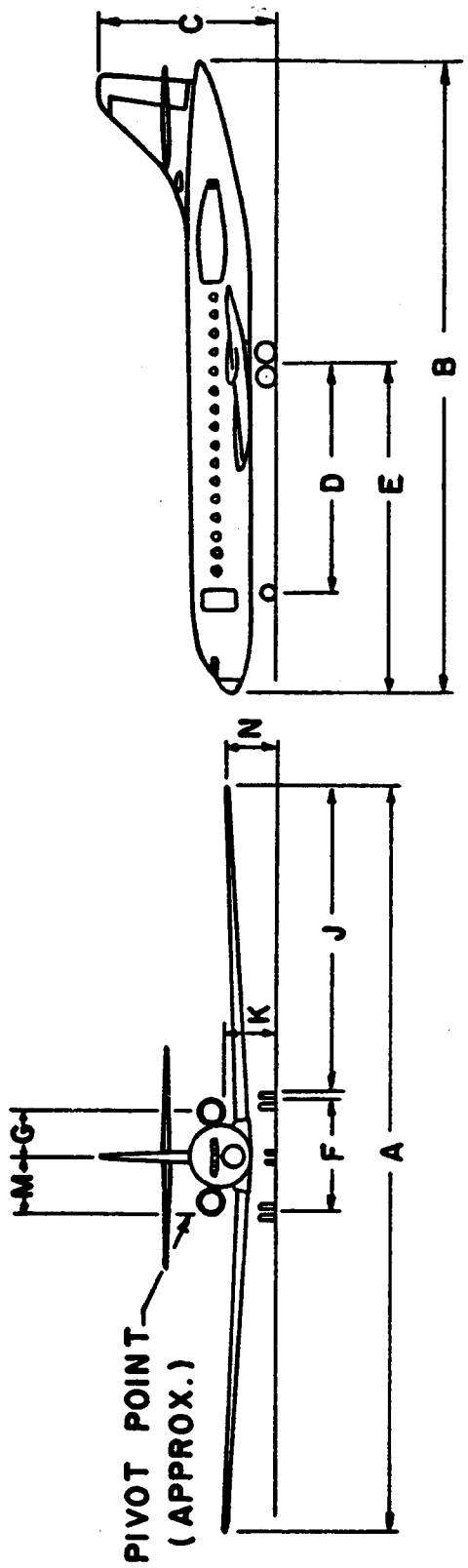

Figure A12-10. Aérospatiale/Sud SE-210 Caravelle

MODEL	MAXIMUM TAKEOFF WEIGHT	MAXIMUM LANDING WEIGHT	A	B	C	D	E	F	G	J	K	M	N	TURN RADIUS
A-300 -B2	302,000 LB 136 985 KG	281,000 LB 127 459 KG	147'1" 44.83M	175'6" 53.49M	55'6" 16.92M	60'10" 18.54M	82'8" 25.20M	31'6" 9.60M	26'0" 79.2M	55'10" 17.02M	2'7" 0.79M	37'3" 11.35M	19'4" 5.89M	113'6" 34.59M
A-300 -B4	330,700 LB 150 003 KG	293,200 LB 132 993 KG	147'1" 44.83M	175'6" 53.49M	55'6" 16.92M	60'10" 18.54M	82'8" 25.20M	31'6" 9.60M	26'0" 7.92M	55'5" 16.89M	2'7" 0.79M	37'3" 11.35M	19'4" 5.89M	113'6" 34.59M
A-300 -600	363,763 LB 165 000 KG	304,238 LB 138 000 KG	147'1" 44.83M	177'6' 54.08M	54'8" 16.66M	61'1" 18.26M	82'11" 25.27M	31'6" 9.60M	26'0" 7.92M	55'5" 16.89M	3'3" 0.98M	37'11" 11.55M	18'9" 5.70M	109'3" 33.31M
A-310 -300	330,693 LB 150 000 KG	271,169 LB 123 000 KG	144'1" 43.90M	153'2" 46.67M	52'4" 15.95M	49'11" 15.21M	71'9" 21.87M	31'6" 9.60M	25'3" 7.70M	54'2" 16.51M	2'2" 0.65M	34'2" 10.41M	16'11" 5.17M	108'2" 32.97M
A-320 -100	145,505 LB 66 000 KG	134,482 LB 61 000 KG	111'3" 39.91M	123'3" 37.57M	39'1" 11.91M	41'6" 12.64M	58'1" 17.70M	24'11" 7.59M	18'10" 5.74M	40'10" 12.45M	1'10" 0.55M	15'1" 4.61M	13'5" 4.08M	72'3" 21.99M

NOTE: A-310-200 HAS OPTIONAL (TAKEOFF) WEIGHT OF 305,560 LB (138 610 KG) AND 313,055 LB (141 999 KG).
(LANDING) 268,965 LB (122 000 KG).

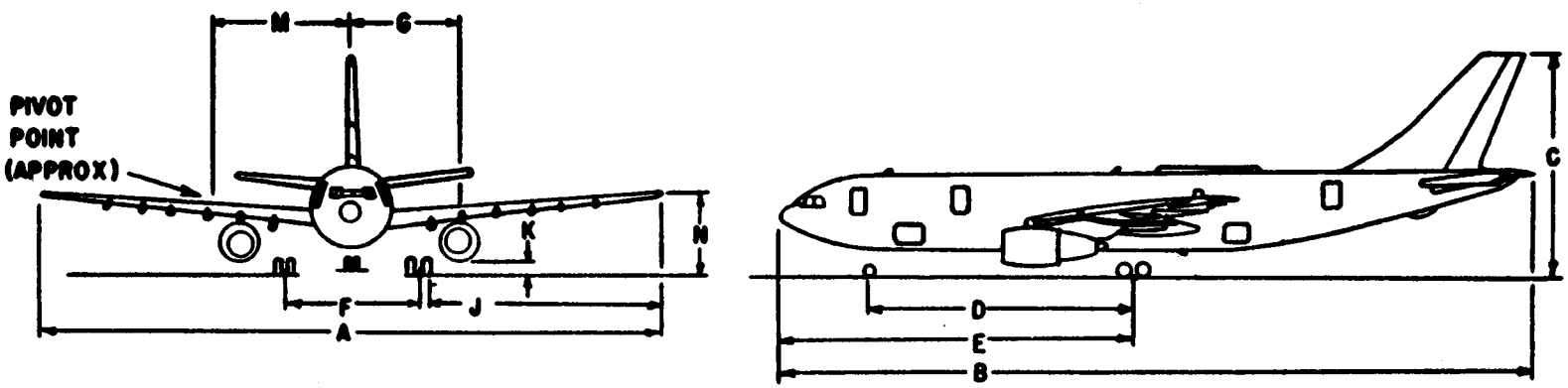

Figure A12-11. Airbus Industries A300, 310, and 320

MODEL	MAXIMUM TAKEOFF WEIGHT	MAXIMUM LANDING WEIGHT	A	B	C	D	E	F	G	J	K	H	N	TURN RADIUS
ATR-42 200	34,725 LB 15 751 KG	34,170 LB 15 499 KG	80'7" 24.56M	74'5" 22.68M	25'5" 7.75M	28'10" 8.79M	34'4" 10.46M	13'5" 4.09"	13'3" 4.04M	32'5" 9.88M	3'6" 1.07M	16'8" 5.08M	12'1" 3.68M	57'1" 17.40M
ATR-42 300	35,605 LB 16 150 KG	35,275 LB 16 000 KG	80'7" 24.56M	74'5" 22.68M	25'5" 7.75M	28'10" 8.79M	34'4" 10.46M	13'5" 4.09M	13'3" 4.04M	32'5" 9.88M	3'6" 1.07M	16'8" 5.08M	12'1" 3.68M	57'1" 17.40M
ATR-72	44,070 LB 19 990 KG	43,870 LB 19 899 KG	88'9" 27.05M	89'2" 27.18M	25'1" 7.65M	35'1" 10.69M	40'11" 12.47M	13'5" 4.09M	13'3" 4.04M	36'6" 11.13M	3'6" 1.07M	20'5" 6.22M	12'3" 3.73M	64'10" 19.76M

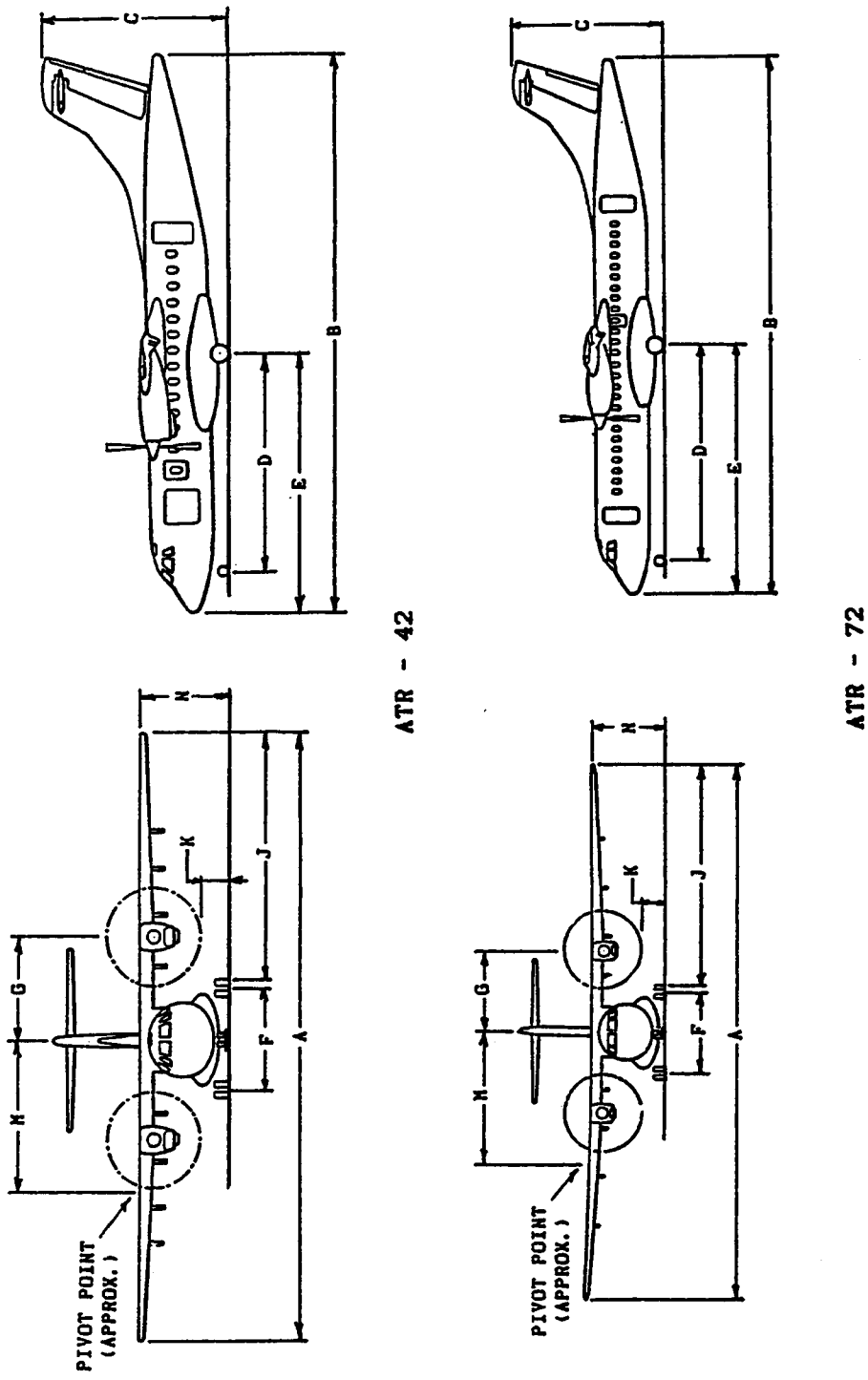

Figure A12-12. Avions de Transport Regional ATR-42 & -72

MODEL	MAXIMUM TAKEOFF WEIGHT	MAXIMUM LANDING WEIGHT	A	B	C	D	E	F	G	J	K	M	N	TURN RADIUS
10	18,740 LB 8 500 KG	17,640 LB 8 001 KG	42'11" 13.08M	45'6" 13.87M	15'1" 4.60M									
20	28,660 LB 13 000 KG	27,320 LB 12 392 KG	53'6" 16.31M	56'3" 17.14M	17'5" 5.31M	18'10" 5.74M		12'2" 3.71M	5'6" 1.68M	18'11" 5.77M	5'8" 1.72M	15'3" 4.65M	4'10" 1.47M	42'0" 12.80M
50	37,480 LB 17 001 KG	35,715 LB 16 200 KG	61'11" 18.87M	60'9" 18.52M	22'11" 6.98M	23'9" 7.24M		13'1" 3.99M						
200	30,650 LB 13 903 KG	28,800 LB 13 063 KG	53'6" 16.31M	56'3" 17.14M	17'5" 5.31M									
900	45,500 LB 20 638 KG	42,000 LB 19 051 KG	63'5" 19.33M	66'3" 20.19M	24'10" 7.57M									

NOTE: MODEL 50 HAS OPTIONAL MAXIMUM TAKEOFF WEIGHT OF 40,780 LB (18 497 KG).

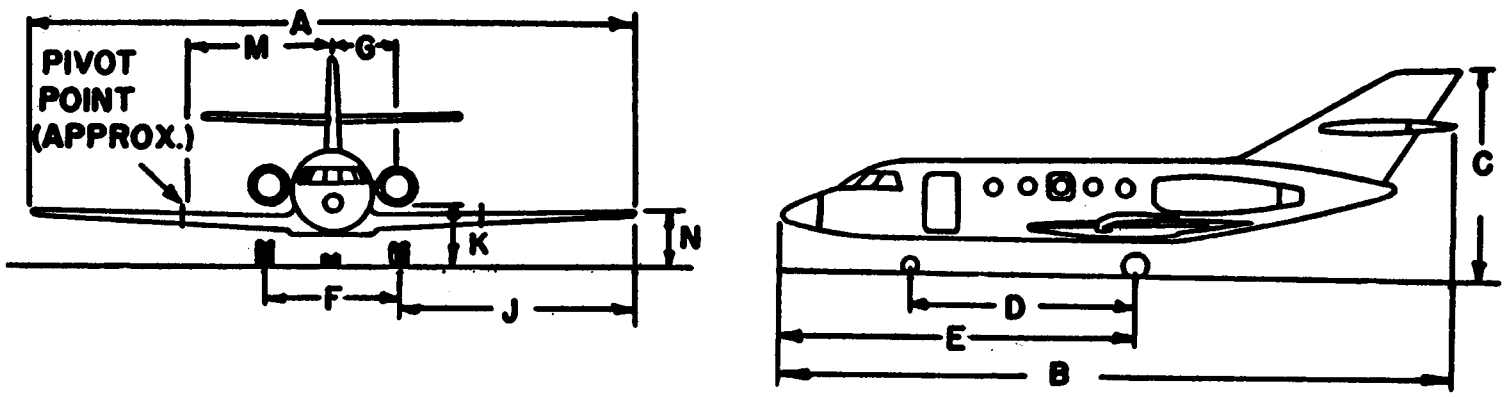

Figure A12-13. Avions Marcel Dassault Mystère 20 (Fan Jet Facon)

MODEL	MAXIMUM TAKEOFF WEIGHT	MAXIMUM LANDING WEIGHT	A	B	C	D	E	F	G	J	K	M	N	TURN RADIUS
200	79,000 LB 35 834 KG	69,000 LB 31 298 LB	88'6" 26.97M	93'6" 28.48M	24'6" 7.46M	33'1" 10.15M	48'5" 14.49M	14'3" 4.34M	8'2" 2.49M	35'9" 10.90M	6'7" 2.01M	7'8" 2.34M	7'4" 2.24M	52'6" 15.95M
400														
500	104,500 LB 47 400 KG	86,000 LB 39 009 KG	93'6" 28.49M	107'0" 32.61M	24'6" 7.46M	41'5" 12.35M	56'9" 17.30M	14'3" 4.34M	8'2" 2.49M	42'8" 13.00M	6'7" 2.01M	7'8" 2.34M	7'4" 2.24M	

SRS 400 HAS MAXIMUM (TAKEOFF) WEIGHT OF 87,000 LB (39 463 KG).
(LANDING) 78,000 LB (35 380 KG).

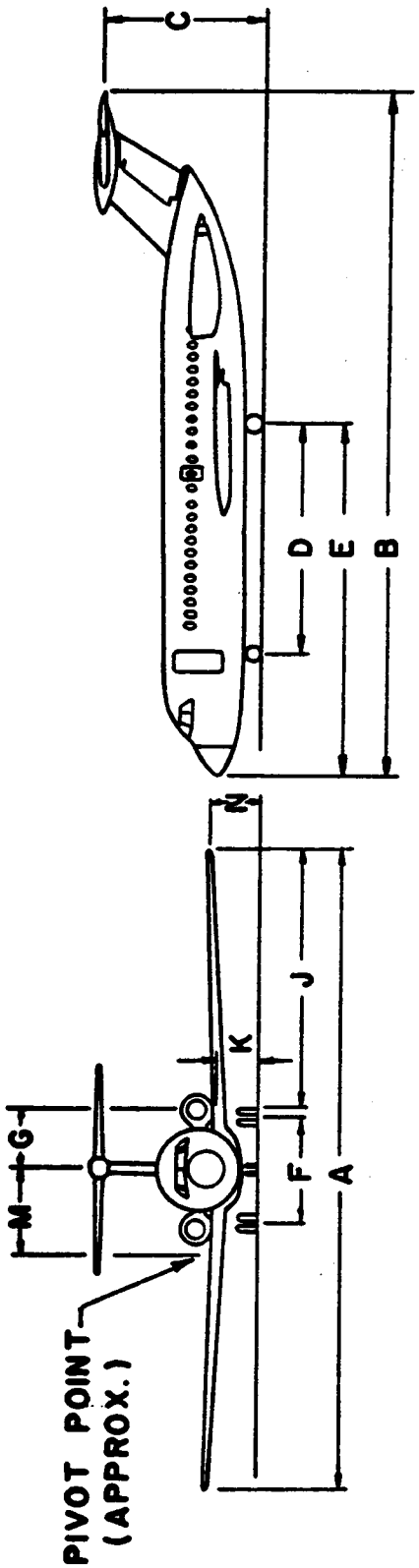

Figure A12-14. BAe 1-11

MODEL	MAXIMUM TAKEOFF WEIGHT	MAXIMUM LANDING WEIGHT	A	B	C	D	E	F	G	J	K	M	N	TURN RADIUS
CONCORDE	408,000 LB 185 066 KG	245,000 LB 111 130 KG	83'10" 25.55M	205'5" 62.61M	37'5" 11.40M	59'8" 18.19M	122'10" 37.44M	25'4" 7.72M	18'1" 5.51M	27'3" 8.31M	6'1" 1.85M	32'5" 9.88M	8'6" 2.59M	127'0" 38.71M

*TIP OF PROBE, NOSE FULLY LOWERED 8'6" (2.59M).

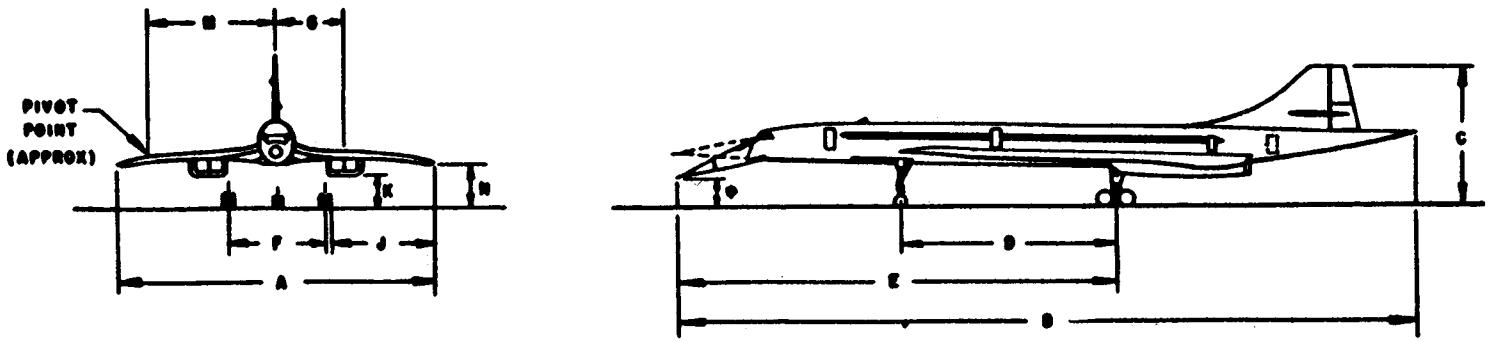

Figure A12-15. B.A.C./SNIAS Concorde

MODEL	MAXIMUM TAKEOFF WEIGHT	MAXIMUM LANDING WEIGHT	A	B	C	D	E	F	G	J	K	M	N	TURN RADIUS
VC-10 -1100	312,000 LB 141 521 KG	216,000 LB 97 976 KG	146'2" 44.60M	158'9" 48.39M	39'6" 12.04M	65'10" 20.06M		21'5" 6.53M						
VC-10 -1150	335,100 LB 151 999 KG	237,000 LB 107 501 KG	146'2" 44.60M	171'8" 52.32M	39'6" 12.04M	72'1" 21.97M		21'5" 6.53M						

SRS 1150 KNOWN AS VC-10 SUPER.

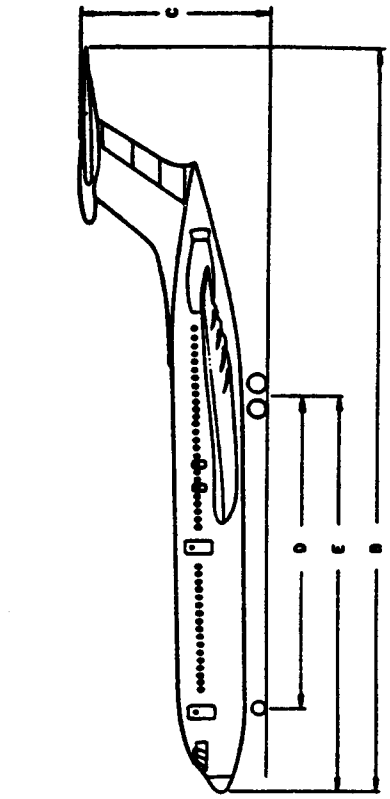

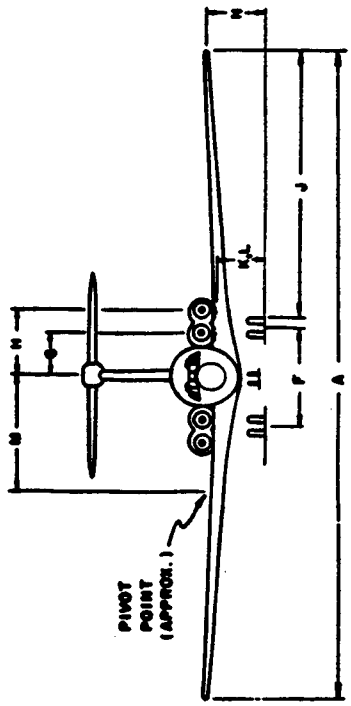

Figure A12-16. B.A.C./Vickers VC-10

MODEL	MAXIMUM TAKEOFF WEIGHT	MAXIMUM LANDING WEIGHT	A	B	C	D	E	F	G	H	J	K	L	M	N	TURN RADIUS
745	64,500 LB 29 257 KG	57,500 LB 26 082 KG	93'9" 28.57M	81'10" 24.94M	26'9" 8.15M	25'3" 7.70M	35'8" 10.87M	23'10" 7.32M	12'9" 3.88M		33'9" 10.29M	1'1" 0.33M		20'10" 6.56M	8'7" 2.62M	67'8" 20.62M
810	72,500 LB 32 885 KG	62,000 LB 28 123 KG	94'0" 28.65M	85'8" 25.83M	26'10" 8.18M	29'1" 8.86M	39'6" 12.04M	23'10" 7.32M	12'9" 3.88M		33'9" 10.29M	1'1" 0.33M		24'5" 7.39M	8'7" 2.62M	71'3" 21.72M

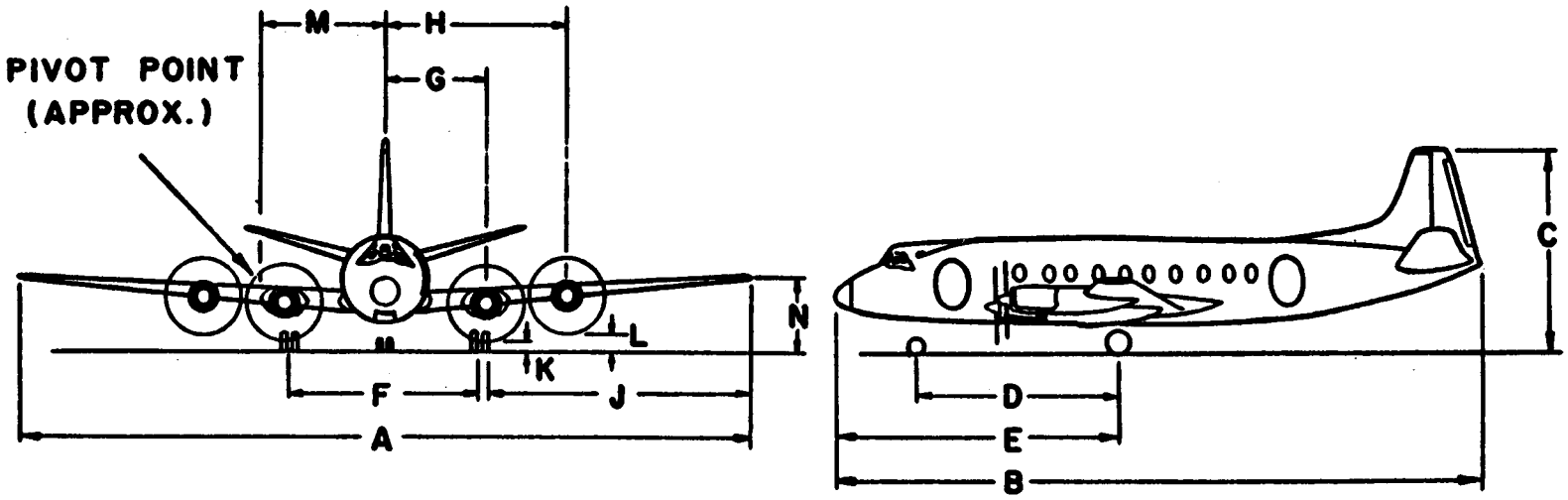

Figure A12-17. B.A.C./Vickers Viscount

MODEL	MAXIMUM TAKEOFF WEIGHT	MAXIMUM LANDING WEIGHT	A	B	C	D	E	F	G	J	K	M	N	TURN RADIUS
1	14,000 LB 6 350 KG	13,300 LB 6 033 KG	54'5" 16.59M	46'1" 14.05M	12'11" 3.94M	22'6" 6.86M	28'8" 8.74M	16'10" 5.13M	4'10' 1.47M	18.1" 5.51M	2'11" 0.89M		4'6" 1.37M	

NOTE: FORWARD WING SPAN:
AFT POSITION 20'11" (6.38M).
FORWARD POSITION 24'11" (7.59M).

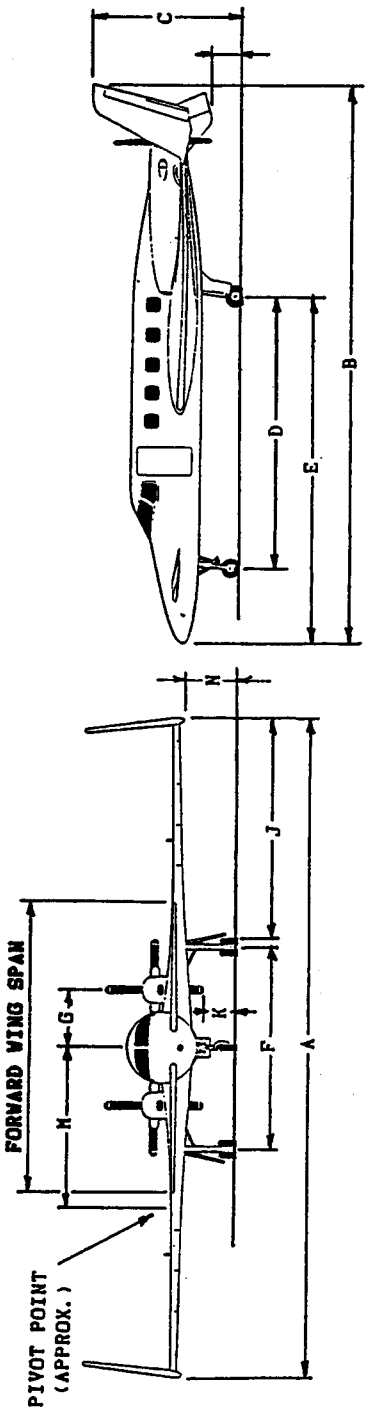

Figure A12-18. Beech Starship

MODEL	MAXIMUM TAKEOFF WEIGHT	MAXIMUM LANDING WEIGHT	A	B	C	D	F	NUMBER SEATS	TURN RADIUS
C99	11,300 LB 5 126 KG	11,300 LB 5 126 KG	45'11" 14.00M	44'7" 13.59M	14'5" 4.39M	18'0" 5.49M	13'0" 3.97M	17	40'0" 12.19M
1900	16,600 LB 7 530 KG	16,100 LB 7 303 KG	54'6" 16.61M	57'10" 17.63M	14'11" 4.55M	23'10" 7.26M	17'2" 5.23M	19	39'4" 11.99M

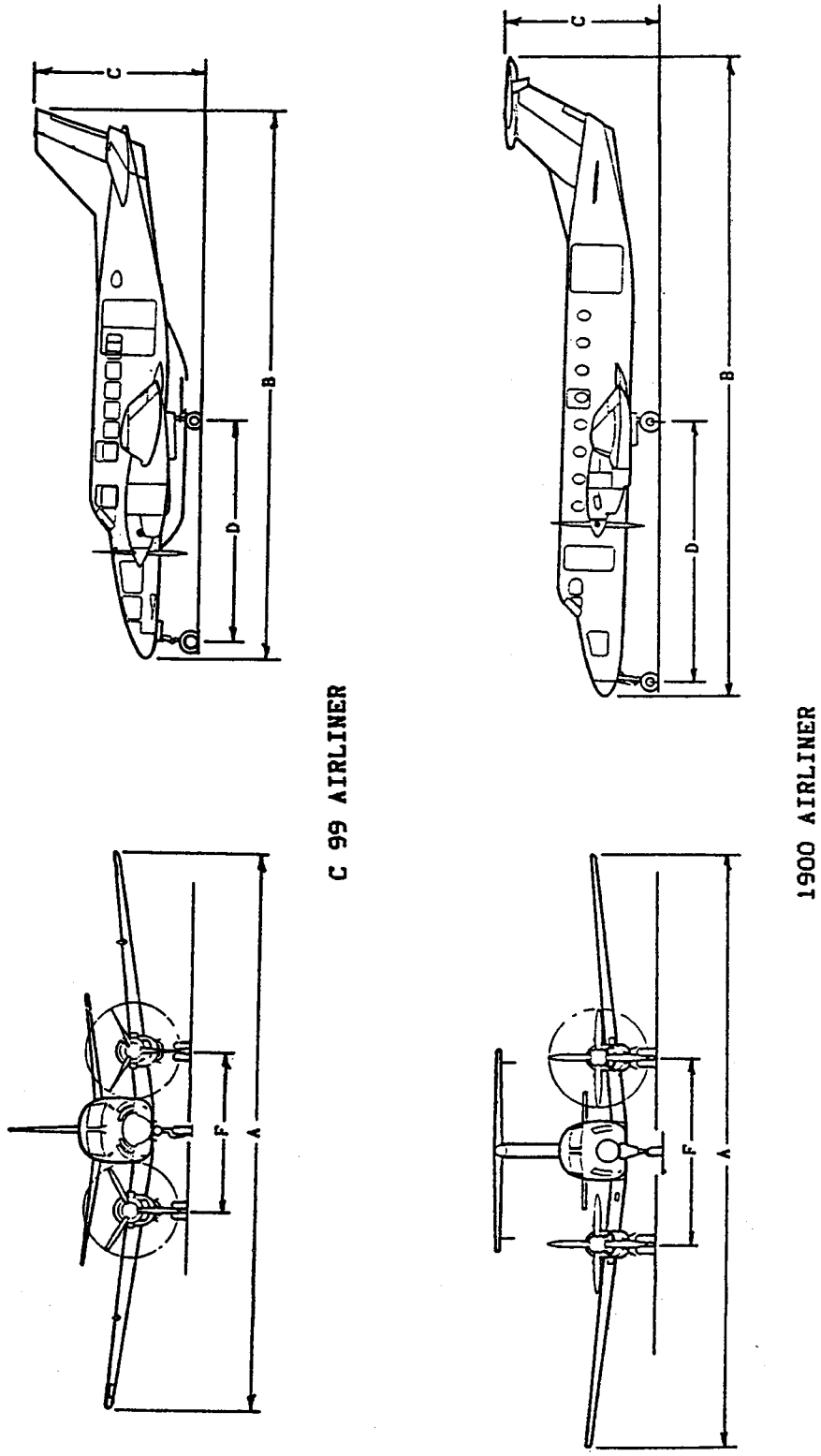

Figure A12-19. Beechcraft Airliner

MODEL	MAXIMUM TAKEOFF WEIGHT	MAXIMUM LANDING WEIGHT	A	B	C	D	F	NUMBER SEATS	TURN RADIUS
A-90	9,650 LB 4 391 KG	9,500 LB 4 323 KG	50'3" 15.32M	36'6" 11.14M	14'8" 4.47M	12'4" 3.76M	12'9" 3.89M	8	
A-100	10,600 LB 4 823 KG	10 500 LB 4 778 KG	45'11" 14.00M	39'11" 12.18M	15'4" 4.67M	14'11" 4.55M	13'0" 3.97M	10	

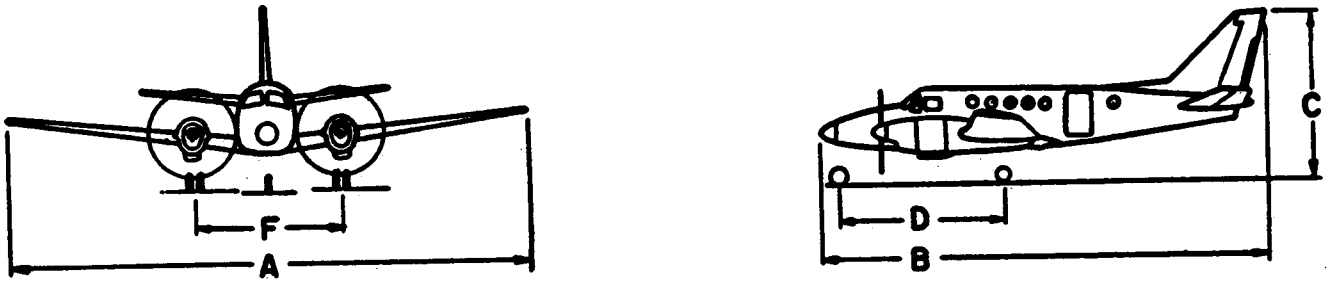

Figure A12-20. Beechcraft King Air

MODEL	MAXIMUM TAKEOFF WEIGHT	MAXIMUM LANDING WEIGHT	A	B	C	D	F	NUMBER SEATS	TURN RADIUS
18	9,900 LB 4 500 KG	9,500 LB 4 323 KG	49'8" 15.14M	35'3" 10.74M	9'4" 2.87M	23'9" 7.24M	12'11" 3.94M	10	30'3" 9.53M
TURBO 18	10,280 LB 4 673 KG	9,775 LB 4 444 KG	46'0" 14.03M	37'5" 11.40M	9'7" 2.95M			12	
VOLPAR TURBOLINER	11,500 LB 5 324 KG	11,000 LB 5 000 KG	46'0" 14.03M	44'3" 13.49M	9'7" 2.95M			15	

NOTES: MODEL 18 HAS RECIPROCATING ENGINES.
TURBOPROP CONVERSIONS HAVE TRICYCLE LANDING GEAR.

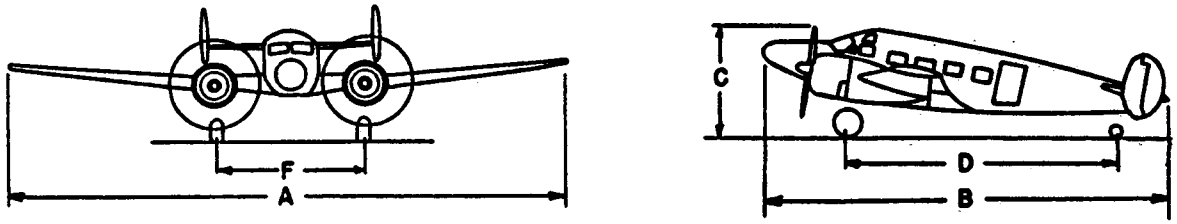

Figure A12-21. Beechcraft Model 18 and Conversions

MODEL	MAXIMUM TAKEOFF WEIGHT	MAXIMUM LANDING WEIGHT	A	B	C	D	F	NUMBER SEATS	TURN RADIUS
A-65	7,700 LB 3 493 KG	7,350 LB 3 334 KG	45'11" 14.00M	35'6" 10.83M	14'3" 4.34M	12'4" 3.76M	12'9" 3.89M	6	29'4" 8.94M
B-80	8,800 LB 3 992 KG	8,800 LB 3 992 KG	50'3" 15.31M	35'6" 10.83M	14'3" 4.34M	12'4" 3.76M	12'9" 3.89M	8	29'4" 8.94M

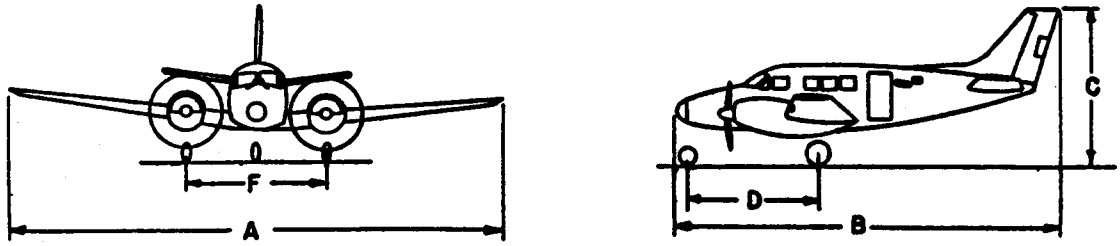

Figure A12-22. Beechcraft Queen Air

MODEL	MAXIMUM TAKEOFF WEIGHT	MAXIMUM LANDING WEIGHT	A	B	C	D	E	F	G	H	J	K	L	M	N	TURN RADIUS
STRATO-	488,000 LB	450,000 LB	185'0"	156'7"	40'10"	49'9"	89'10"	11'4"	32'2"	60'0"	86'2"	6'4"	4'8"	39'0"	5'6"	132'0"
FORTRESS	221 353 KG	204 117 KG	56.39M	47.73M	12.45M	15.16M	17.16M	3.45M	9.80M	18.29M	26.26M	1.93M	1.42M	11.89M	1.68M	40.23M

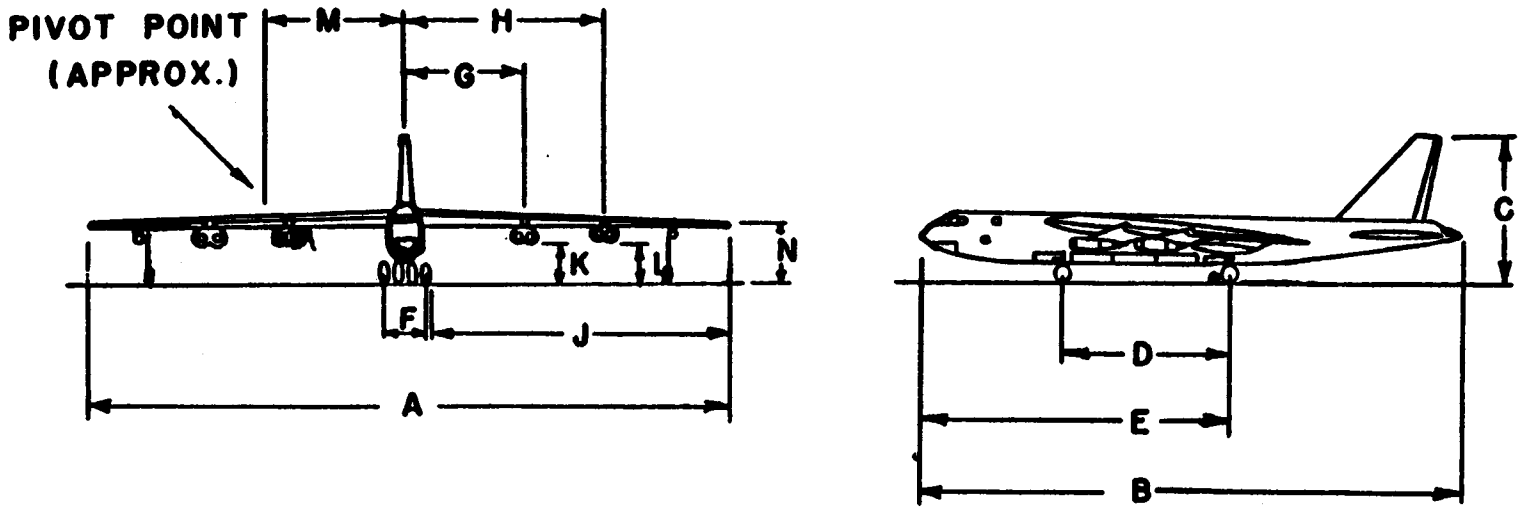

Figure A12-23. Boeing B-52 Stratofortress

MODEL	MAXIMUM TAKEOFF WEIGHT	MAXIMUM LANDING WEIGHT	A	B	C	D	E	F	G	H	J	K	L	M	N	TURN RADIUS
STRATO-CRUISER	145,800 LB 66 134 KG	121,700 LB 55 202 KG	141'3" 43.05M	110'4" 33.63M	38'3" 11.65M	39'2" 11.93M	42'10" 13.06M	28'6" 8.70M	14'1" 4.29M	31'2" 9.50M	55'4" 16.87M	1'5" 0.43M	2'7" 0.79M	14'3" 4.34M		84'10" 25.86M

NOTE: OPTIONAL TAKEOFF WEIGHTS: 153,000 LB (69 400 KG) AND 175,000 LB (79 379 KG).

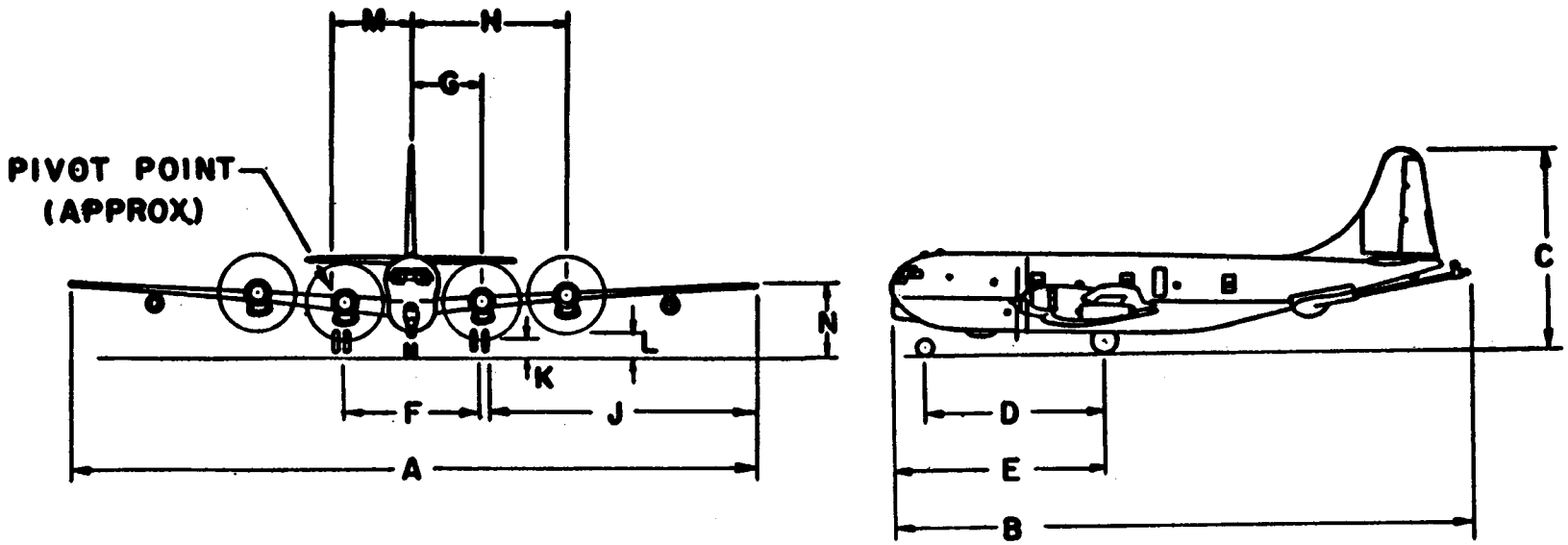

Figure A12-24. Boeing KC-97L

MODEL	MAXIMUM TAKEOFF WEIGHT	MAXIMUM LANDING WEIGHT	A	B	C	D	E	F	G	H	J	K	L	M	N	TURN RADIUS
	301,600 LB 136 803 KG	185,000 LB 83 915 KG	130'10" 39.88M	136'3" 41.53M	38'5" 11.71M	45'8" 13.92M	63'1" 19.23M	22'1" 6.73M	27'2" 8.28M	46'1" 14.25M	51'11" 15.98M	2'4" 0.71M	4'8" 1.42M	36'7" 11.15M	12'4" 3.76M	107'0" 32.60M

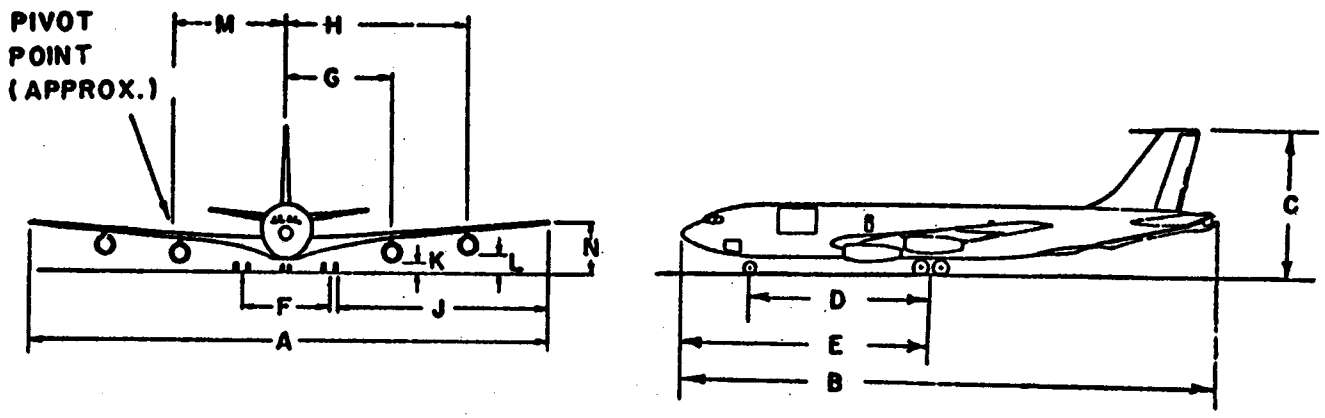

Figure A12-25. Boeing KC-135A

MODEL	MAXIMUM TAKEOFF WEIGHT	MAXIMUM LANDING WEIGHT	A	B	C	D	E	F	G	H	J	K	L	M	N	TURN RADIUS
720	229,300 LB 104 009 KG	175,000 LB 79 379 KG	130'10" 39.88M	136'2" 41.50M	41'5" 12.62M	50'8" 15.44M	68'1" 20.75M	21'11" 6.67M	27'2" 8.28M	46'1" 14.05M	52'6" 16.00M	2'7" 0.79M	4'3" 1.30M	32'9" 9.98M	10'10" 3.30M	102'5" 31.22M
720B	234,300 LB 106 277 KG	175,000 LB 79 379 KG	130'10" 39.88M	136'9" 41.68M	41'2" 12.55M	50'8" 15.44M	68'1" 20.75M	21'11" 6.67M	27'2" 8.28M	46'1" 14.05M	52'6" 16.00M	2'1" 0.64M	3'9" 1.14M	32'9" 9.98M	10'10" 3.30M	102'5" 31.22M
707- 120B	257,340 LB 116 727 KG	190,000 LB 86 183 KG	130'10" 39.88M	145'1" 44.22M	41'8" 12.70M	52'4" 15.95M	69'9" 21.25M	22'1" 6.73M	27'2" 8.28M	46'1" 14.05M	52'3" 15.93M	2'4" 0.71M	4'2" 1.27M	36'7" 11.15M	11'7" 3.53M	107'0" 32.61M
707- 320/420	312,000 LB 141 521 LB	207,000 LB 93 894 KG	142'5" 43.41M	152'11" 46.61M	42'2" 12.85M	59'0" 17.98M	76'5" 23.28M	22'1" 6.73M	32'6" 9.91M	51'5" 15.67M	58'1" 17.70M	2'9" 0.84M	4'7" 1.40M	38'4" 11.68M	12'1" 3.68M	114'0" 34.75M
707- 320B,C	327,000 LB 148 325 KG	207,000 LB 93 894 KG	145'9" 44.42M	152'11" 46.61M	42'1" 12.83M	59'0" 17.98M	76'5" 23.28M	22'1" 6.73M	32'6" 9.91M	51'5" 15.67M	59'9" 18.21M	2'9" 0.84M	4'7" 1.40M	38'4" 11.68M	12'1" 3.68M	116'0" 35.36M

NOTE: OPTIONAL TAKEOFF AND LANDING WEIGHTS:

707 333,600 LB (151 318 KG) MAXIMUM TAKEOFF WEIGHT.
320B 215,000 LB (97 522 KG) MAXIMUM LANDING WEIGHT.

707 333,600 LB (151,318 KG) MAXIMUM TAKEOFF WEIGHT.
320C 247,000 LB (112 037 KG) MAXIMUM LANDING WEIGHT.

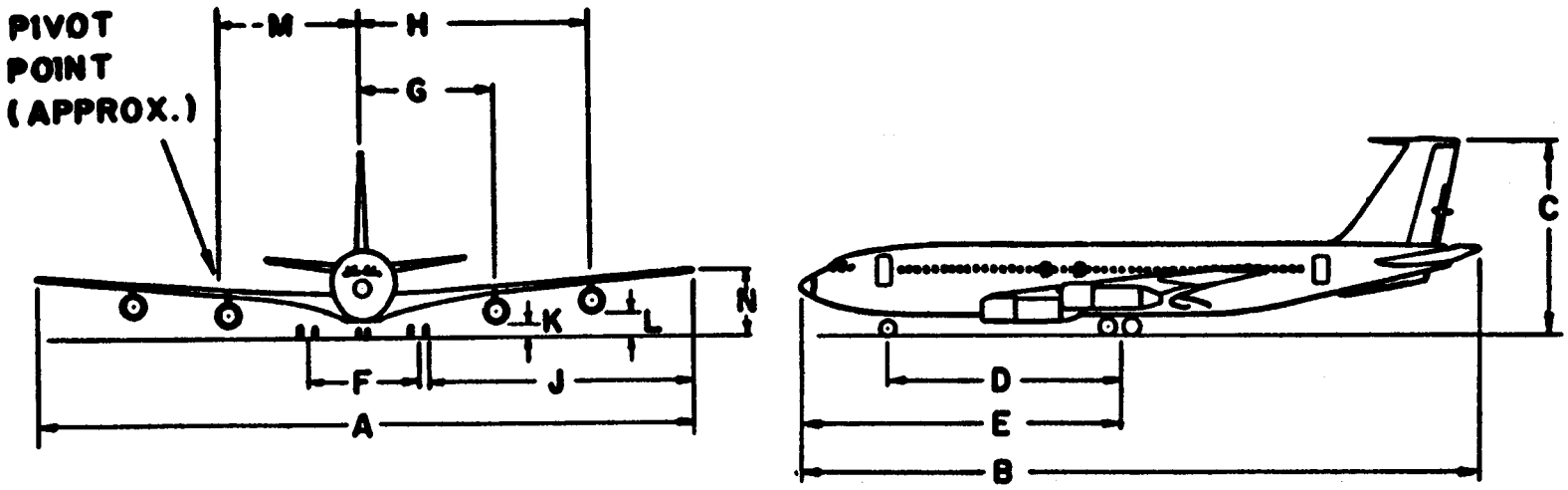

Figure A12-26. Boeing 707-720

MODEL	MAXIMUM TAKEOFF WEIGHT	MAXIMUM LANDING WEIGHT	A	B	C	D	E	F	G	J	K	M	N	P	TURN RADIUS
100	160,000 LB 72 575 KG	137,500 LB 62 369 KG	108'0" 32.92M	133'2" 40.59M	34'3" 10.44M	53'3" 16.23M	68'4" 20.83M	18'9" 5.72M	9'3" 2.82M	42'6" 12.95M	10'4" 3.15M	14'4" 4.37M	5'8" 1.72M	12'0" 3.66M	72'0" 21.95M
100-C	160,000 LB 72 575 KG	137,500 LB 62 369 KG	108'0" 32.92M	133'2" 40.59M	34'3" 10.44M	53'3" 16.23M	68'4" 20.83M	18'9" 5.72M	9'3" 2.82M	42'6" 12.95M	10'4" 3.15M	14'4" 4.37M	5'8" 1.72M	12'0" 3.66M	72'0" 21.95M
200	172,000 LB 78 018 KG	150,000 LB 68 039 KG	108'0" 32.92M	153'2" 46.68M	34'11" 10.65M	63'3" 19.28M	78'4" 23.88M	18'9" 5.72M	9'3" 2.82M	42'4" 12.90M	10'4" 3.15M	16'11" 5.16M	4'9" 1.44M	12'0" 3.66M	82'0" 24.99M

NOTE: OPTIONAL TAKEOFF AND LANDING WEIGHTS:

100	160,000 LB (72 575 KG)	169,000 LB (76 657 KG)		MAXIMUM TAKEOFF WEIGHT.
	142,500 LB (64 637 KG)	142,500 LB (64 637 KG)		MAXIMUM LANDING WEIGHT.
100C	160,000 LB (72 575 KG)	169,000 LB (76 657 KG)		MAXIMUM TAKEOFF WEIGHT.
	140,000 LB (63 503 KG)	142,500 LB (64 637 KG)		MAXIMUM LANDING WEIGHT.
200	184,800 LB (83 824 KG)	190,500 LB (86 409 KG)	197,000 LB (89 358 KG)	209,500 LB (95 028 KG) MAXIMUM TAKEOFF WEIGHT.
	154,500 LB (70 080 KG)	154,500 LB (70 080 KG)	154,500 LB (70 080 KG)	161,000 LB (73 028 KG) MAXIMUM LANDING WEIGHT.

Figure A12-27. Boeing 727

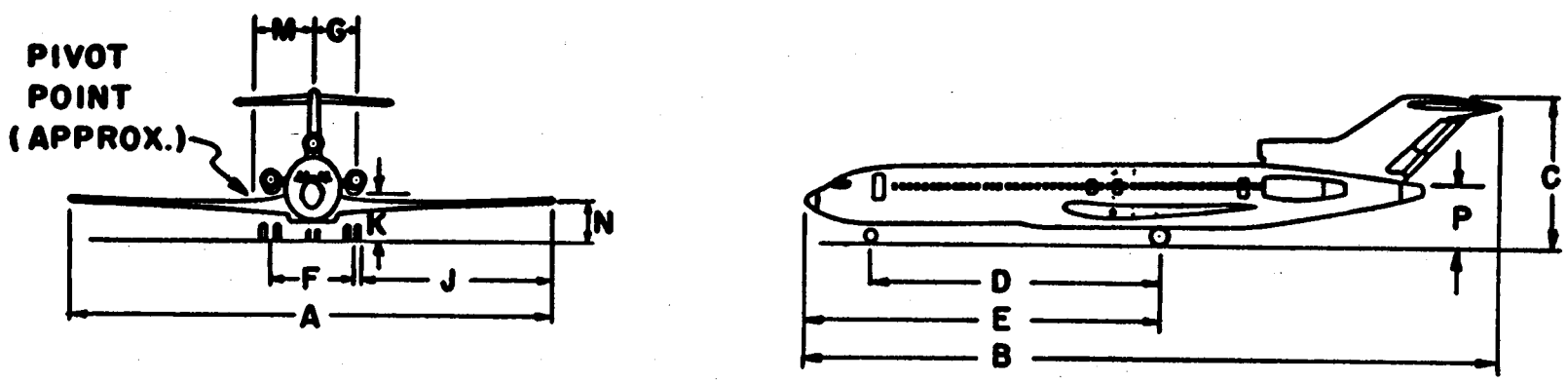

MODEL	MAXIMUM TAKEOFF WEIGHT	MAXIMUM LANDING WEIGHT	A	B	C	D	E	F	G	J	K	M	N	TURN RADIUS
100	97,000 LB 43 998 KG	89,700 LB 40 687 KG	93'0" 28.35M	94'0" 28.65M	37'2" 11.33M	34'4" 10.46M	47'4" 14.42M	17'2" 5.23M	15'10" 4.83M	36'1" 11.00M	1'8" 0.51M	9'2" 2.80M	10'0" 3.05M	57'2" 17.42M
200	100,000 LB 45 359 KG	95,000 LB 43 091 KG	93'0" 28.35M	100'2" 30.53M	37'3" 11.35M	37'4" 11.38M	50'4" 15.34M	17'2" 5.23M	15'10" 4.83M	36'1" 11.00M	1'8" 0.51M	10'0" 3.05M	10'0" 3.05M	58'2" 17.73M
300	124,500 LB 56 472 KG	114,000 LB 51 710 KG	94'9" 28.88M	109'7" 33.40M	36'7" 11.15M	40'10" 12.45M	54'0" 16.46M	17'2" 5.23M	15'10" 4.83M	36'11" 11.25M	1'6" 0.46M	11'0" 3.35M	10'0" 3.05M	64'0" 19.51M
400	138,500 LB 68 823 KG	121,000 LB 54 885 KG	94'9" 28.88M	119'7" 36.45M	36'7" 11.15M	46'10" 14.27M	60'0" 18.29M	17'2" 5.23M	15'10" 4.83M	36'11" 11.25M	1'6" 0.46M	12'6" 3.81M	10'0" 3.05M	68'4" 20.83M
500	115,500 LB 52 390 KG	110,000 LB 49 895 KG	94'9" 28.88M	101'9" 30.01M	36'7" 11.15M	36'4" 11.07M	49'6" 15.09M	17'2" 5.23M	15'10" 4.83M	36'11" 11.25M	1'6" 0.46M	9'8" 2.95M	10'0" 3.05M	60'7" 18.47M

NOTE: OPTIONAL TAKEOFF AND LANDING WEIGHTS.

100	103,000 LB (46 720 KG) 98,000 LB (44 452 KG)	110,000 LB (49 895 KG) 99,000 LB (44 906 KG)			MAXIMUM TAKEOFF WEIGHT. MAXIMUM LANDING WEIGHT.
200	103,000 LB (46 720 KG) 95,000 LB (43 091 KG)	109,000 LB (49 442 KG) 98,000 LB (44 452 KG)	110,000 LB (49 895 KG) 99,000 LB (44 906 KG)	115,500 LB (52 390 KG) 103,000 LB (46 720 KG)	MAXIMUM TAKEOFF WEIGHT. MAXIMUM LANDING WEIGHT.
200 CONV	109,000 LB (49 442 KG) 98,000 LB (44 452 KG)	110,000 LB (49 895 KG) 99,000 LB (44 906 KG)	110,000 LB (49 895 KG) 103,000 LB (46 720 KG)	115,500 LB (52 390 KG) 103,000 LB (46 720 KG)	115,500 LB (52 390 KG) MAXIMUM TAKEOFF WEIGHT. 103,000 LB (46 720 KG) MAXIMUM LANDING WEIGHT.
200 ADV C,QC	115,500 LB (52 390 KG) 103,000 LB (46 720 KG)	117,000 LB (53 070 KG) 105,000 LB (47 627 KG)	119,500 LB (54 204 KG) 105,000 LB (47 627 KG)	124,500 LB (56 472 KG) 107,000 LB (48 534 KG)	128,100 LB (58 105 KG) MAXIMUM TAKEOFF WEIGHT. 107,000 LB (48 534 KG) MAXIMUM LANDING WEIGHT.
300	130,000 LB (58 967 KG) 114,000 LB (51 710 KG)	135,000 LB (61 235 KG) 114,000 LB (51 710 KG)	137,000 LB (62 142 KG) 114,000 LB (51 710 KG)	138,500 LB (62 823 KG) 115,800 LB (52 526 KG)	MAXIMUM TAKEOFF WEIGHT. MAXIMUM LANDING WEIGHT.
400	142,500 LB (64 637 KG) 121,000 LB (54 885 KG)	150,000 LB (68 039 KG) 124,000 LB (56 245 KG)	142,500 LB (64 637 KG) 124,000 LB (56 245 KG)	150,000 LB (68 039 KG) 124,000 LB (56 245 KG)	MAXIMUM TAKEOFF WEIGHT. MAXIMUM LANDING WEIGHT.
500	124,500 LB (56 472 KG) 110,000 LB (49 895 KG)	133,500 LB (60 555 KG) 110,000 LB (49 895 KG)	124,500 LB (56 472 KG) 110,000 LB (49 895 KG)	133,500 LB (60 555 KG) 110,000 LB (49 895 KG)	MAXIMUM TAKEOFF WEIGHT. MAXIMUM LANDING WEIGHT.

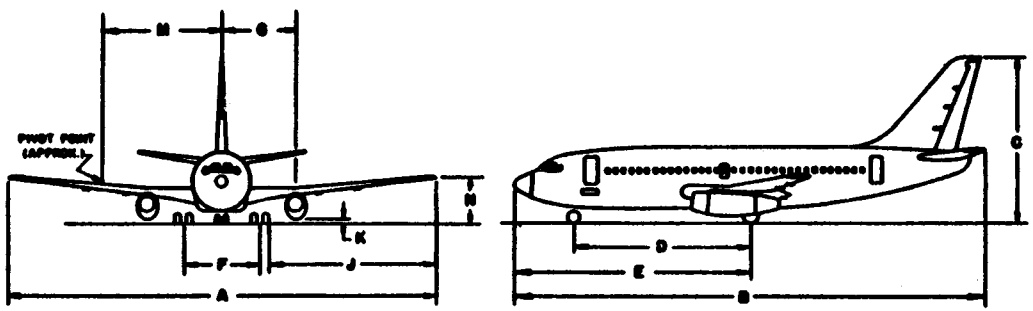

Figure A12-28. Boeing 737

MODEL	MAXIMUM TAKEOFF WEIGHT	MAXIMUM LANDING WEIGHT	A	B	C	D	E	F	G	H	J	K	L	M	N	TURN RADIUS
100B 200B, C 300PASS	SEE NOTE	SEE NOTE	195'8" 59.64M	231'10" 70.66M	64'3" 19.58M	84'0" 25.60M	109'5" 33.35M	36'1" 11.00M	39'9" 12.12M	69'10" 21.29M	77'3" 23.55M	3'9" 1.14M	4'11" 1.50M	40'0" 12.19M	17'7" 5.36M	151'0" 46.02M
200C 200F CARGO	SEE NOTE	SEE NOTE	195'8" 59.64M	231'10" 70.66M	64'8" 19.71M	84'0" 25.60M	109'5" 33.35M	36'1" 11.00M	39'9" 12.12M	69'10" 21.29M	77'3" 23.55M	3'9" 1.14M	6'0" 1.83M	40'0" 12.19M	17'7" 5.36M	151'0" 46.02M
SP	SEE NOTE	SEE NOTE	195'8" 59.64M	184'9" 56.31M	65'10" 20.07M	67'4" 20.52M	92'9" 28.27M	36'1" 11.00M	39'2" 11.94M	69'6" 21.18M	77'4" 23.57M	3'7" 1.09M	5'7" 1.70M	40'0" 12.19M	17'2" 5.23M	151'0" 46.02M
400	SEE NOTE	SEE NOTE	213'0" 64.92M	231'10" 70.66M	64'3" 19.58M	84'0" 25.60M	109'5" 33.35M	36'1" 11.00M	39'2" 11.94M	69'6" 21.18M	85'10" 26.16M	3'9" 1.14M	6'0" 1.83M	40'0" 12.19M	16'9" 5.11M	159'0" 48.46M

NOTE: OPTIONAL TAKEOFF AND LANDING WEIGHTS. 564-585 DENOTES STANDARD AND OPTIONAL WEIGHT IN THOUSANDS OF POUNDS.

100/100B	710,000 LB	750,000 LB	*735,000 LB	#571,000 LB	#600,000 LB	MAXIMUM TAKEOFF WEIGHT.
*100SF #100B SR	564,000 LB	585,000 LB	*564,000 LB	#564,000 LB	#564,000 LB	MAXIMUM LANDING WEIGHT.
200B	775,000 LB	785,000 LB	800,000 LB	823,000 LB	833,000 LB	MAXIMUM TAKEOFF WEIGHT.
	564,000 LB	564,000 LB	585,000 LB	630,000 LB	630,000 LB	MAXIMUM LANDING WEIGHT.
200B COMBI	775,000 LB	785,000 LB	800,000 LB	820,000 LB	833,000 LB	MAXIMUM TAKEOFF WEIGHT.
	585-630 LB	630,000 LB	630,000 LB	630,000 LB	630,000 LB	MAXIMUM LANDING WEIGHT.
200C P	775,000 LB	800,000 LB	*785,000 LB	*820,000 LB	*833,000 LB	MAXIMUM TAKEOFF WEIGHT.
*200C C	630,000 LB	630,000 LB	*630,000 LB	*630,000 LB	*630,000 LB	MAXIMUM LANDING WEIGHT.
200F CARGO	775,000 LB	785,000 LB	800,000 LB	823,000 LB	833,000 LB	MAXIMUM TAKEOFF WEIGHT.
	630,000 LB	630,000 LB	630,000 LB	630,000 LB	630,000 LB	MAXIMUM LANDING WEIGHT.
300	710,000 LB	735,000 LB	750,000 LB	*520,000 LB	*600,000 LB	MAXIMUM TAKEOFF WEIGHT.
*300 SR	564,000 LB	564,000 LB	564,000 LB	*515,000 LB	*535,000 LB	MAXIMUM LANDING WEIGHT.
300/200B	775,000 LB	785,000 LB	800,000 LB	820,000 LB	833,000 LB	MAXIMUM TAKEOFF WEIGHT.
	574-630 LB	574-630 LB	574-630 LB	574-630 LB	574-640 LB	MAXIMUM LANDING WEIGHT.
300 COMBI	775,000 LB	785,000 LB	800,000 LB	820,000 LB	833,000 LB	MAXIMUM TAKEOFF WEIGHT.
	605-630 LB	605-630 LB	605-630 LB	605-630 LB	605-630 LB	MAXIMUM LANDING WEIGHT.
SP	630,000 LB	660,000 LB	670,000 LB	690,000 LB	696,000 LB	MAXIMUM TAKEOFF WEIGHT.
	450-465 LB	450-465 LB	450-465 LB	450-465 LB	450-465 LB	MAXIMUM LANDING WEIGHT.
400	800,000 LB	800,000 LB	833,000 LB	833,000 LB	850-870 LB	MAXIMUM TAKEOFF WEIGHT.
	574-585 LB	630,000 LB	574-585 LB	630,000 LB	630,000 LB	MAXIMUM LANDING WEIGHT.

METRIC CONVERSION TABLE

POUNDS	KILOGRAMS	POUNDS	KILOGRAMS
450,000	204 117	690,000	312 979
465,000	210 920	696,000	315 700
515,000	233 600	710,000	322 051
520,000	235 868	735,000	333 390
535,000	242 672	750,000	340 194
564,000	255 826	775,000	351 534
571,000	250 001	785,000	356 070
574,000	260 362	800,000	362 874
585,000	265 352	820,000	371 946
600,000	272 155	823,000	373 307
605,000	274 423	833,000	377 842
630,000	285 763	850,000	385 554
660,000	299 371	870,000	394 625
670,000	303 907		

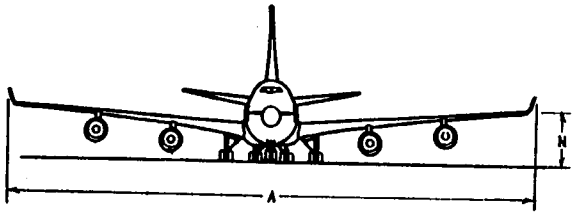

747-400

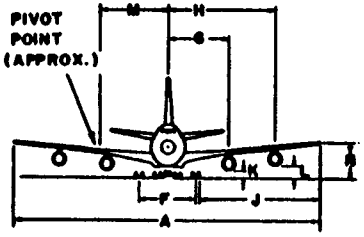

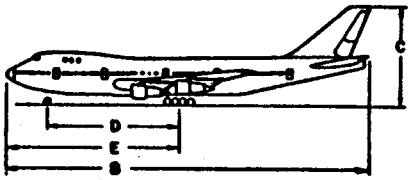

Figure A12-29. Boeing 747

MODEL	MAXIMUM TAKEOFF WEIGHT	MAXIMUM LANDING WEIGHT	A	B	C	D	E	F	G	J	K	M	N	TURN RADIUS
757-200	SEE	SEE	124'10"	155'3"	45'1"	60'0"	79'4"	24'0"	21'3"	48'2"	2'5"	35'0"	15'4"	98'0"
-200PF	NOTE	NOTE	38.05M	47.32M	13.74M	18.29M	24.18M	7.32M	6.48M	14.68M	0.74M	10.67M	4.67M	29.87M

NOTE: OPTIONAL TAKEOFF AND LANDING WEIGHTS.

757-200	220,000 LB (99 790 KG)	230,000 LB (104 326 KG)	240,000 LB (108 862 KG)	250,000 LB (113 398 KG)	255,000 LB (115 666 KG)*	MAXIMUM TAKEOFF WEIGHT.
RB211 -535C -535E4 -535E4B PW2037 PW2040	198,000 LB (89 811 KG)	198,000 LB (89 811 KG)	198,000 LB (89 811 KG)	198,000 LB (89 811 KG)	210,000 LB (95 254 KG)	MAXIMUM LANDING WEIGHT.

757	250,000 LB (113 389 KG)	255,000 LB (115 666 KG)*	MAXIMUM TAKEOFF WEIGHT.
-200PF	210,000 LB (95 254 KG)	210,000 LB (95 254 KG)	MAXIMUM LANDING WEIGHT.

* 235,500 LB (115 893 KG) FOR AIRPORT ALTITUDES BELOW 1,500 FT.

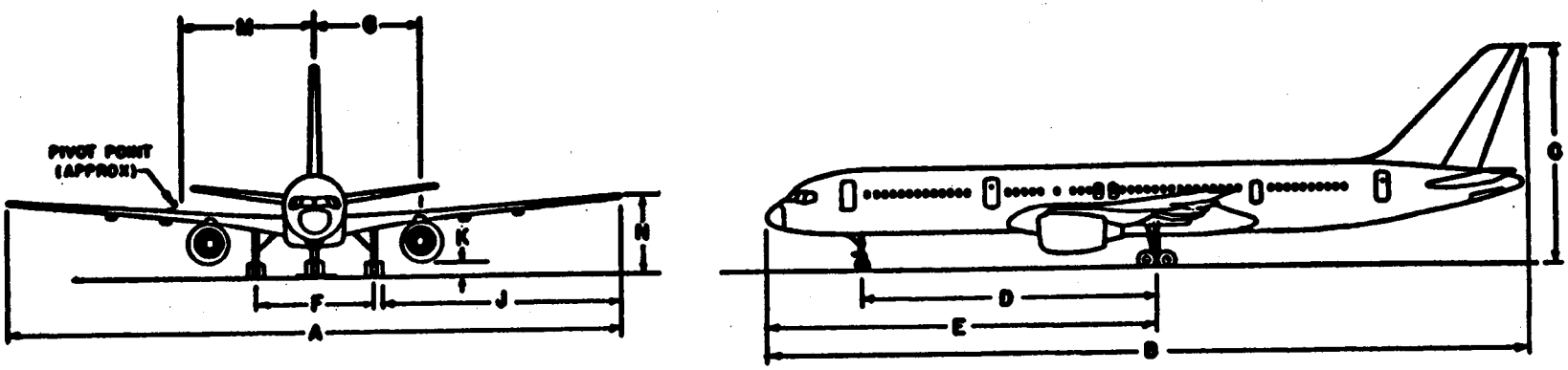

Figure A12-30. Boeing 757

MODEL	MAXIMUM TAKEOFF WEIGHT	MAXIMUM LANDING WEIGHT	A	B	C	D	E	F	G	J	K	M	N	TURN RADIUS
200	282,000 LB 127 913 KG	257,000 LB 116 573 KG	156'1" 47.57M	159'2" 48.51M	52'11" 16.13M	64'7" 19.69M	79'6" 24.23M	30'6" 9.30M	26'0" 7.92M	60'1" 18.31M	2'8" 0.81M	36'0" 10.97M	16'3" 4.95M	117'0" 35.66M
200ER	335,000 LB 151 953 KG	278,000 LB 126 099 KG	156'1" 47.57M	159'2" 48.51M	52'11" 16.13M	64'7" 19.69M	79'6" 24.23M	30'6" 9.30M	26'0" 7.92M	60'1" 18.31M	2'8" 0.81M	36'0" 10.97M	16'3" 4.95M	117'0" 35.66M
300	345,000 LB 156 489 KG	300,000 LB 136 078 KG	156'1" 47.57M	180'3" 54.94M	52'7" 16.03M	74'8" 22.76M	89'7" 27.31M	30'6" 9.30M	26'0" 7.92M	60'1" 18.31M	2'10" 0.86M	41'0" 12.50M	16'1" 4.90M	123'0" 37.49M
300ER	380,000 LB 172 365 KG	300,000 LB 136 078 KG	156'1" 47.57M	180'3" 54.94M	52'7" 16.03M	74'8" 22.76M	89'7" 27.31M	30'6" 9.30M	26'0" 7.92M	60'1" 18.31M	2'10" 0.86M	41'0" 12.50M	16'1" 4.90M	123'0" 37.49M

NOTE: OPTIONAL TAKEOFF AND LANDING WEIGHTS:

200	300,000 LB (136 078 KG) 270,000 LB (122 470 KG)	310,000 LB (140 614 KG) 270,000 LB (122 470 KG)	315,000 LB (142 882 KG) 272,000 LB (123 377 KG)	MAXIMUM TAKEOFF WEIGHT. MAXIMUM LANDING WEIGHT.
200ER	345,000 LB (156 489 KG) 278,000 LB (126 099 KG)	351,000 LB (159 211 KG) 278,000 LB (126 099 KG)	380,000 LB (172 365 KG) 285,000 LB (129 274 KG)	387,000 LB (175 540 KG) 285,000 LB (129 274 KG)	MAXIMUM TAKEOFF WEIGHT. MAXIMUM LANDING WEIGHT.
300	350,000 LB (158 757 KG) 300,000 LB (136 078 KG)	MAXIMUM TAKEOFF WEIGHT. MAXIMUM LANDING WEIGHT.		
300ER	387,000 LB (175 540 KG) 300,000 LB (136 078 KG)	400,000 LB (181 437 KG) 320,000 LB (145 150 KG)	407,000 LB (184 612 KG) 320,000 LB (145 150 KG)	MAXIMUM TAKEOFF WEIGHT. MAXIMUM LANDING WEIGHT.

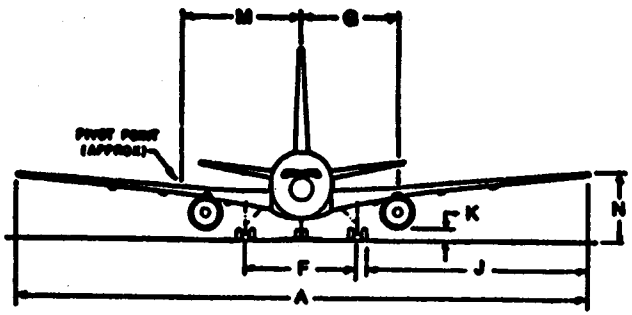

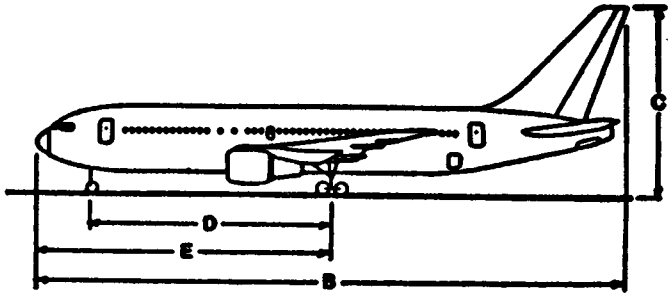

Figure A12-31. Boeing 767

MODEL	MAXIMUM TAKEOFF WEIGHT	MAXIMUM LANDING WEIGHT	A	B	C	D	E	F	G	H	J	K	L	M	N	TURN RADIUS
100	74,600 LB 33 838 KG	71,800 LB 32 591 KG	86'5" 26.34M	85'10" 26.16M	28'3" 8.61M	33'1" 10.08M	40'7" 12.37M	15'6" 4.72M	13'7" 4.14M	22'4" 6.81M	33'8" 10.26M	5'0" 1.52M	4'8" 1.42M	15'6" 4.72M	13'11" 4.24M	37'10" 11.53M
200	88,250 LB 40 030 KG	77,000 LB 34 927 KG	86'5" 26.34M	93'8" 28.55M	28'3" 8.61M	36'9" 11.20M	44'2" 13.46M	15'6" 4.72M	13'7" 4.14M	22'4" 6.81M	33'8" 10.26M	5'0" 1.52M	4'7" 1.40M	15'6" 4.72M	13'11" 4.24M	41'2" 12.55M
300	104,000 LB 47 174 KG	90,000 LB 40 823 KG	86'5" 26.34M	104'2" 31.75M	28'1" 8.56M	36'9" 11.20M	48'10" 14.88M	15'6" 4.72M	13'7" 4.14M	22'4" 6.81M	33'8" 10.26M	5'0" 1.52M	4'7" 1.40M	15'6" 4.72M	13'11" 4.24M	46'8" 14.22M

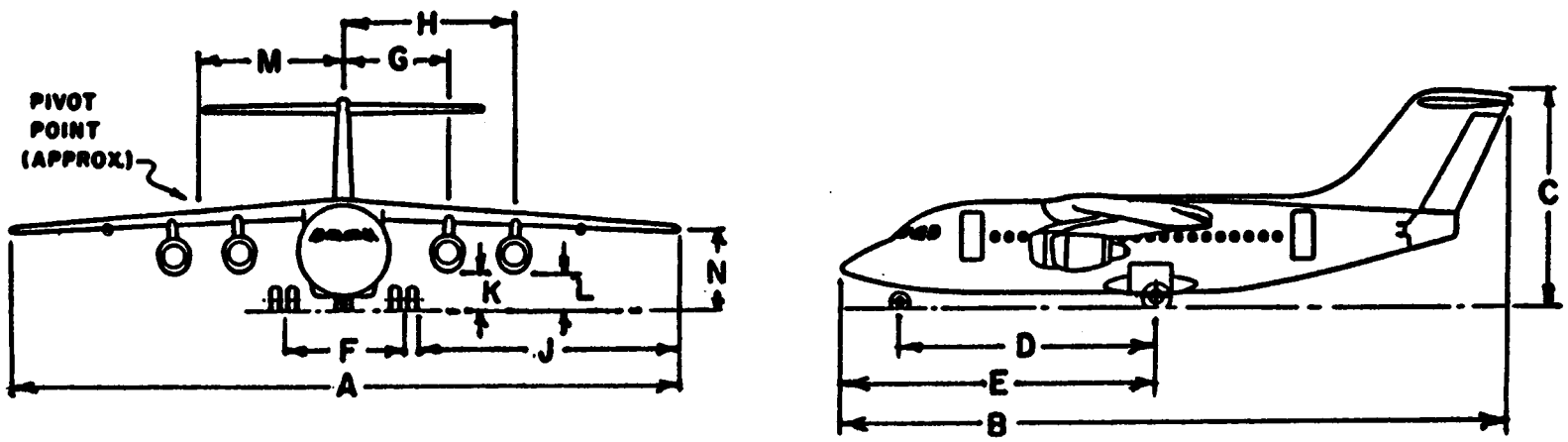

Figure A12-32. British Aerospace 146

MODEL	MAXIMUM TAKEOFF WEIGHT	MAXIMUM LANDING WEIGHT	A	B	C	D	E	F	G	H	J	K	L	M	N	TURN RADIUS
44D4	210,000 LB 95 254 KG	165,000 LB 74 843 KG	142'4" 43.38M	136'10" 41.71M	38'5" 11.71M	49'11" 15.21M	62'8" 19.10M	31'0" 9.45M	15'6" 4.72M	31'8" 9.65M	53'11" 16.43M	1'2" 0.36M	1'8" 0.51M		10'3" 3.12M	113'0" 34.44M
44-6	205,000 LB 92 986 KG	165,000 LB 74 843 KG	142'4" 43.38M	136'10" 41.71M	38'5" 11.71M	49'11" 15.21M	62'8" 19.10M	31'0" 9.45M	15'6" 4.72M	31'8" 9.65M	53'11" 16.43M	1.2" 0.36M	1'8" 0.51M		10'3" 3.12M	113'0" 34.44M
44-J	210,000 LB 95 254 KG	175,000 LB 79 379 KG	142'4" 43.38M	152'0" 46.33M	38'5" 11.71M	60'0" 18.29M	72'9" 22.17M	31'0" 9.45M	15'6" 4.72M	31'8" 9.65M	53'11" 16.43M	1'2" 0.36M	1'8" 0.51M		10'3" 3.12M	

Figure A12-33. Canadiar CL-44

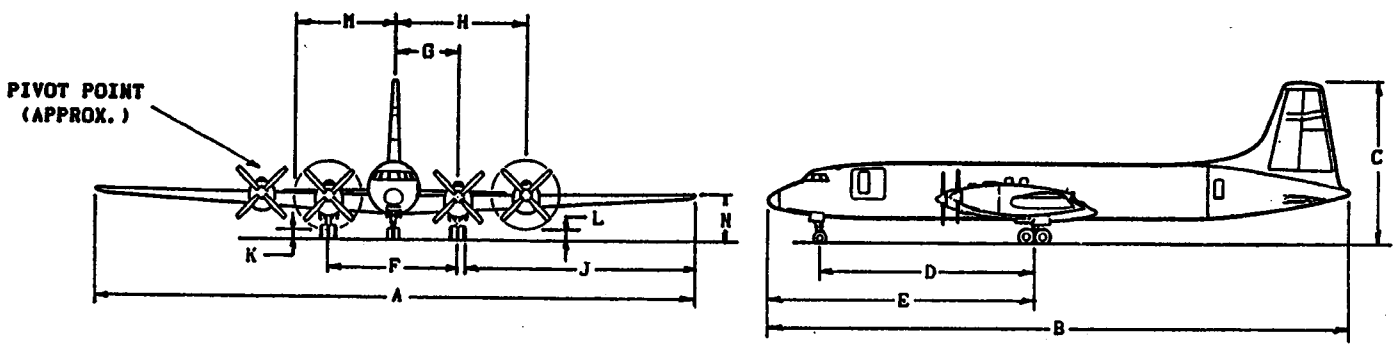

MODEL	MAXIMUM TAKEOFF WEIGHT	MAXIMUM LANDING WEIGHT	A	B	C	D	E	F	G	J	K	M	N	TURN RADIUS
66	58,156 LB 26 379 KG	53,000 LB 24 040 KG	105'4" 32.11M	81'6" 24.84M	29'2" 8.89M	26'2" 7.98M	35'3" 10.74M	25'0" 7.62M	12'6" 3.81M	39'0" 11.89M	1'0" 0.30M		13'0" 3.96M	65'0" 19.81M

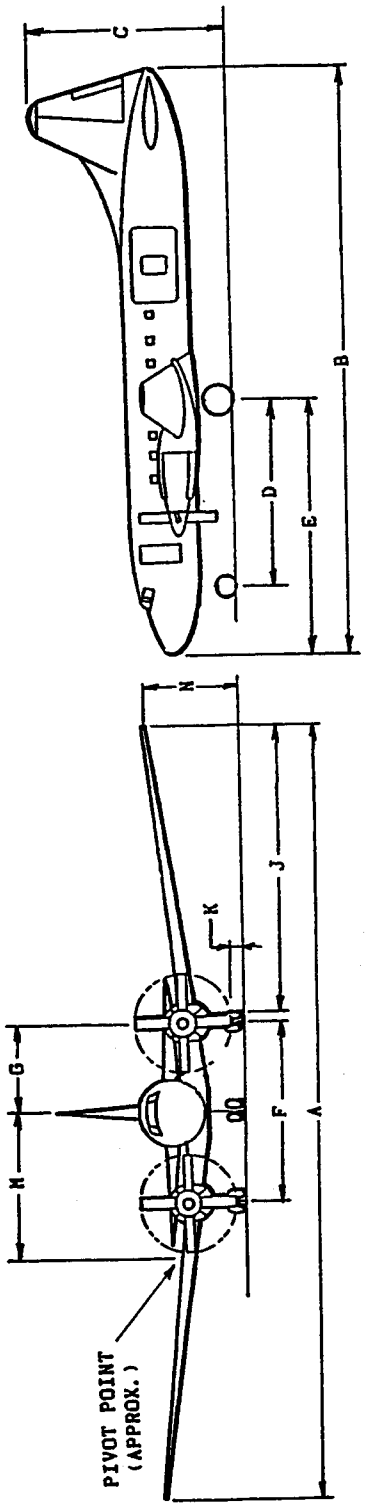

Figure A12-34. Canadiar CL-66

MODEL	MAXIMUM TAKEOFF WEIGHT	MAXIMUM LANDING WEIGHT	A	B	C	D	E	F	G	J	K	M	N	TURN RADIUS
I	11,850 LB 5 375 KG	11,350 LB 5 148 KG	47'1" 14.35M	43'6" 13.26M	14'4" 4.37M	15'2" 4.62M		12'7" 3.84M		14'11" 4.55M				
II	13,300 LB 6 033 KG	12,700 LB 5 761 KG	51'8" 15.75M	47'2" 14.38M	15'0" 4.57M									
S/II	15,100 LB 6 849 KG	14,400 LB 6 532 KG	52'2" 15.90M	47'2" 14.38M	15'0" 4.57M									
III	22,000 LB 9 979 KG	20,000 LB 9 072 KG	53'6" 16.31M	55'6" 16.92M	16'10" 5.13M									
V	16,100 LB 7 303 KG		52'2" 15.90M	49'11" 14.91M	15'0" 4.57M									

Figure A12-35. Cessna Citation

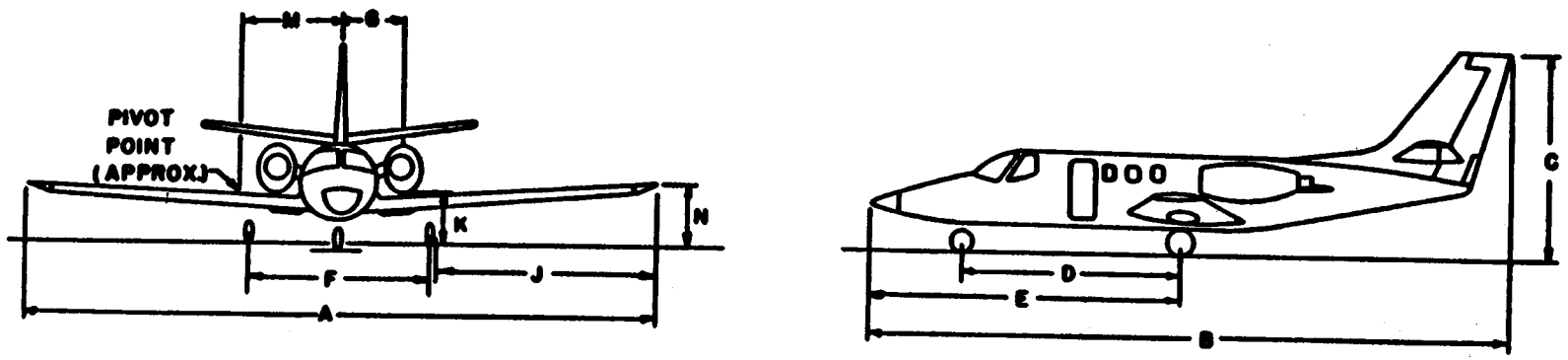

MODEL	MAXIMUM TAKEOFF WEIGHT	MAXIMUM LANDING WEIGHT	A	B	C	D	E	F	G	J	K	N	TURN RADIUS
C-212 200	16,976 LB 7 700 KG	16,424 LB 7 450 KG	62'3" 18.97M	49'10" 15.19M	20'8" 6.30M	17'10" 5.44M		10'2" 3.10M	8'8" 2.64M	26'1" 7.95M	4'2" 1.27M	9'2" 2.79M	49'2" 14.99M
235	31,752 LB 14 402 KG	31,311 LB 14 202 KG	84'8" 25.81M	70'3" 21.41M	26'10" 8.18M	22'8" 6.91M		12'10" 3.91M	11'6" 3.51M	35'11" 10.95M	5'2" 1.57M		

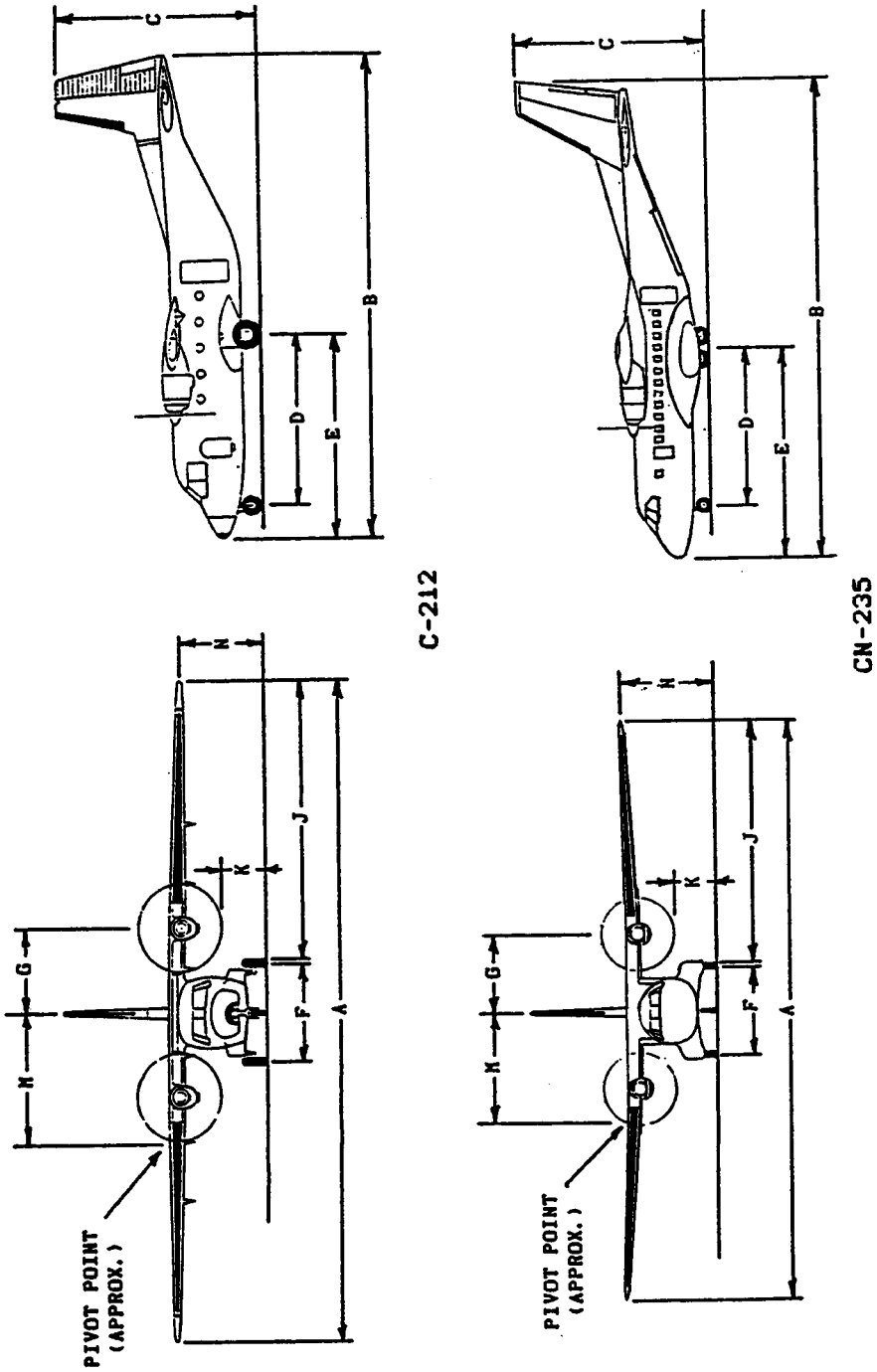

Figure A12-36. Construcciones Aeronauticas CASA C-212 and 235

MODEL	MAXIMUM TAKEOFF WEIGHT	MAXIMUM LANDING WEIGHT	A	B	C	D	E	F	G	J	K	M	N	TURN RADIUS
240	41,790 LB 18 956 KG	39,800 LB 18 053 KG	91'9" 27.97M	74'8" 22.76M	26'11" 8.20M	24'10" 7.57M	32'9" 9.98M	25'0" 7.62M	12'6" 3.81M	32'2" 9.80M	1'0" 0.31M	14'8" 4.47M	9'0" 2.74M	60'6" 18.44M
340	49,100 LB 22 271 KG	46,500 LB 21 092 KG	105'4" 32.18M	81'6" 24.84M	28'2" 8.59M	26'2" 7.98M	34'1" 10.39M	25'0" 7.62M	12'6" 3.81M	38'7" 11.76M	1'0" 0.31M	14'8" 4.47M	11'0" 3.35M	67'4" 20.52M
440	49,100 LB 22 271 KG	47,650 LB 21 614 KG	105'4" 32.18M	81'6" 24.84M	28'2" 8.59M	26'2" 7.98M	36'5" 11.10M	25'0" 7.62M	12'6" 3.81M	38'7" 11.76M	1'0" 0.31M	14'8" 4.47M	11'0" 3.35M	67'4" 20.52M
580	54,600 LB 24 766 KG	52,000 LB 23 587 KG	105'4" 32.18M	81'6" 24.84M	29'2" 8.89M	26'2" 7.98M	36'5" 11.10M	25'0" 7.62M	12'6" 3.81M	38'7" 11.76M	1'0" 0.31M	14'8" 4.47M	11'0" 3.35M	67'4" 20.52M
600	46,200 LB 20 956 KG	44,000 LB 19 958 KG	91'9" 27.97M	74'8" 22.76M	26'11" 8.20M	24'10" 7.57M	32'9" 9.98M	25'0" 7.62M	12'6" 3.81M	32'2" 9.80M	1'3" 0.38M	14'8" 4.47M	9'0" 2.74M	60'6" 18.44M
640	55,000 LB 24 948 KG	52,500 LB 23 814 KG	105'4" 32.18M	81'6" 24.84M	28'2" 8.59M	26'2" 7.98M	36'5" 11.10M	25'0" 7.62M	12'6" 3.81M	38'7" 11.76M	1'1" 0.33M	14'8" 4.47M	11'0" 3.35M	67'4" 20.52M

NOTE; MODELS 240, 340, 440 HAVE RECIPROCATING ENGINES. ALL OTHERS HAVE TURBOPROP ENGINES.

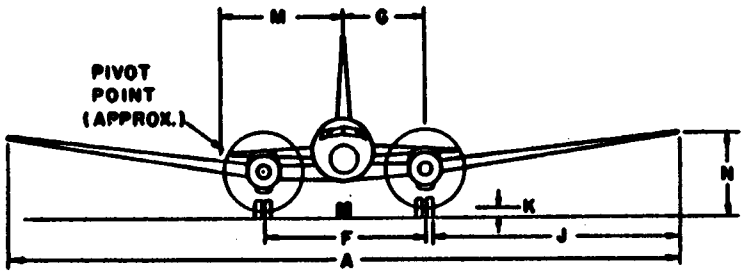

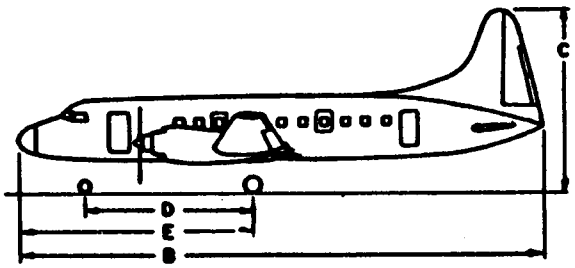

Figure A12-37. Convair-liner and Turboprop Conversions

MODEL	MAXIMUM TAKEOFF WEIGHT	MAXIMUM LANDING WEIGHT	A	B	C	D	E	F	G	J	K	M	N	TURN RADIUS
CARIBOU	28,500 LB 12 927 KG	28,500 LB 12 927 KG	95'7" 29.13M	72'7" 22.12M	31'10" 9.70M			23'1" 7.04M		35'3" 10.74M				

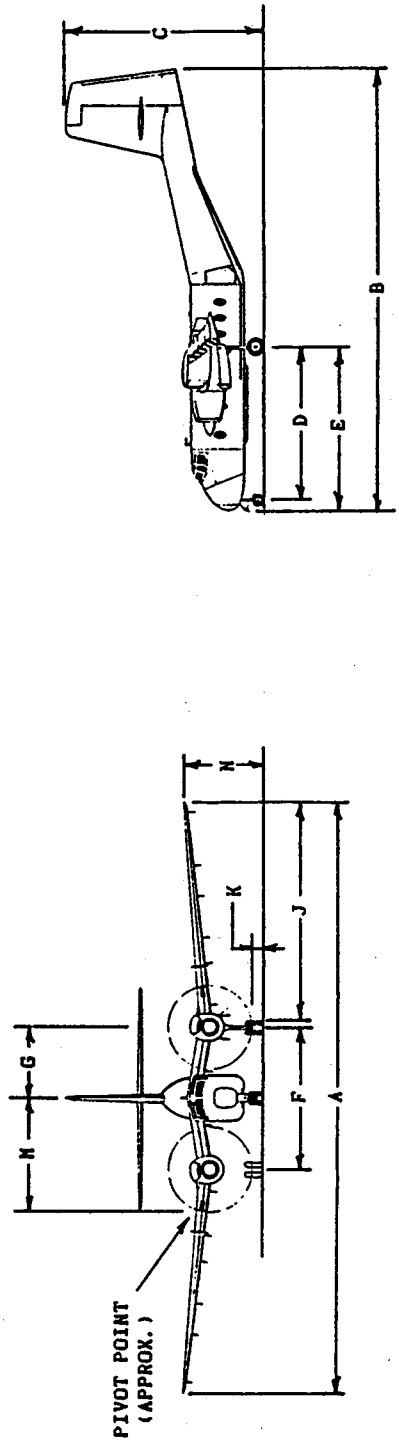

Figure A12-38. De Havilland Canada C-7 Caribou

MODEL	MAXIMUM TAKEOFF WEIGHT	MAXIMUM LANDING WEIGHT	A	B	C	D	E	F	G	J	K	M	N	TURN RADIUS
DASH 7	43,000 LB 19 504 KG	41,000 LB 18 597 KG	93'0" 28.35M	80'8" 24.59M	26'2" 7.98M	27'6" 8.38M		23'6" 7.16M		33'8" 10.26M	5'3" 1.60M		14'2" 4.32M	
DASH 8 100	34,500 LB 15 649 KG	33,900 LB 15 377 KG	90'0" 27.43M	84'3" 25.68M	24'7" 7.49M	32'2" 9.80M		25'10" 7.87M	12'11" 3.94M		3'1" 0.94M		11'11" 3.63M	
DASH 8 300	41,100 LB 18 643 KG	40,000 LB 18 144 KG	90'0" 27.43M	84'3" 25.68M	24'7" 7.49M	32'2" 9.80M		25'10" 7.87M	12'11" 3.94M		3'1" 0.94M		11'11" 3.63M	

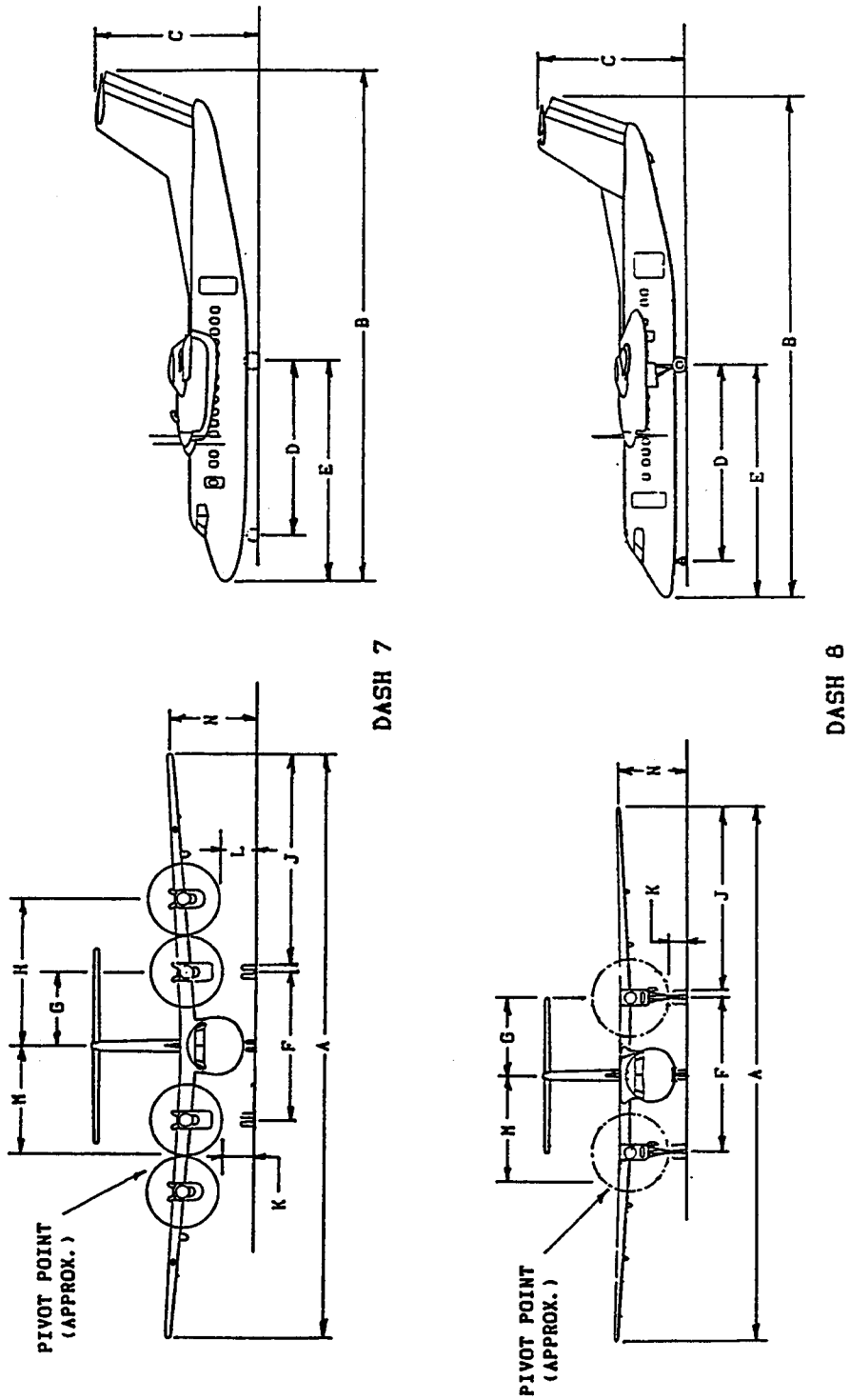

Figure A12-39. De Havilland Canada DASH 7 & DASH 8

MODEL	MAXIMUM TAKEOFF WEIGHT	MAXIMUM LANDING WEIGHT	A	B	C	D	E	F	G	H	J	K	L	M	N	TURN RADIUS
GOLBE-MASTER	175,000 LB 79 379 KG	110,000 LB 49 895 KG	174'2" 53.10M	130'5" 39.77M	48'4" 14.72M	37'3" 11.35M		34'2" 10.41M	17'1" 5.21M			3'0" 0.91M				

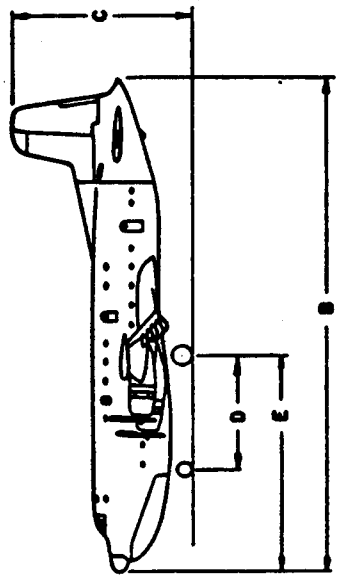

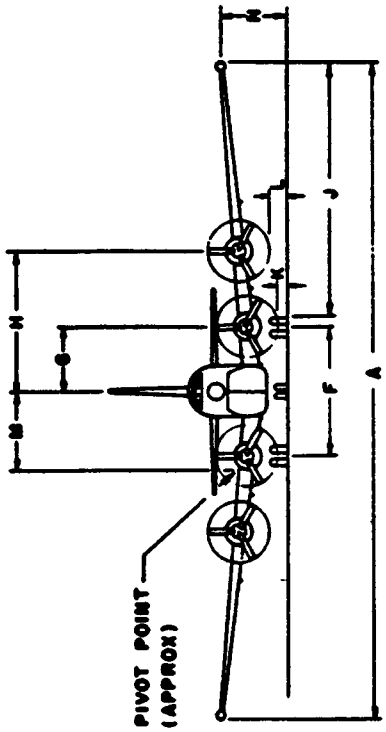

Figure A12-40. Douglas C-124 Globemaster

MODEL	MAXIMUM TAKEOFF WEIGHT	MAXIMUM LANDING WEIGHT	A	B	C	D	F	NUMBER SEATS	TURN RADIUS
TWIN OTTER	12,500 LB 5 670 KG	12,300 LB 5 579 KG	65'0" 19.81M	51'8" 15.75M	19'6" 5.94M	14'9" 4.50M	12'6" 3.81M	21	48'0" 14.63M

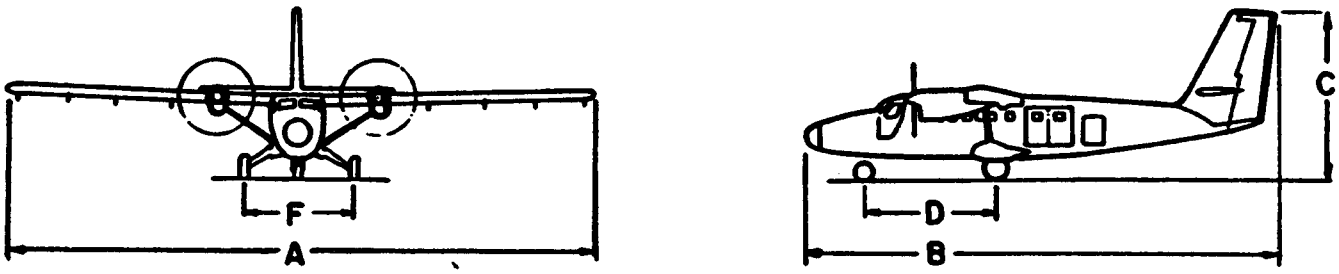

Figure A12-41. De Havilland Canada DHC-6 Twin Otter

MODEL	MAXIMUM TAKEOFF WEIGHT	MAXIMUM LANDING WEIGHT	A	B	C	D	E	F	G	J	K	M	N	TURN RADIUS
228-201	13,183 LB 5 980 KG	13,007 LB 5 900 KG	55'8" 16.97M	54'4" 16.56M	15'11" 4.85M	20'8" 6.30M	25'5" 7.75M	10'10" 3.30M	7'10" 2.39M	21'11" 6.68M	3'6" 1.07M	21'4" 6.50M	6'3" 1.91M	48'6" 14.78M
228-202	13,669 LB 6 200 KG	13,007 LB 5 900 KG	55'8" 16.97M	54'4" 16.56M	15'11" 4.85M	20'8" 6.30M	25'5" 7.75M	10'10" 3.30M	7'10" 2.39M	21'11" 6.68M	3'6" 1.07M	21'4" 6.50M	6'3" 1.91M	48'6" 14.78M

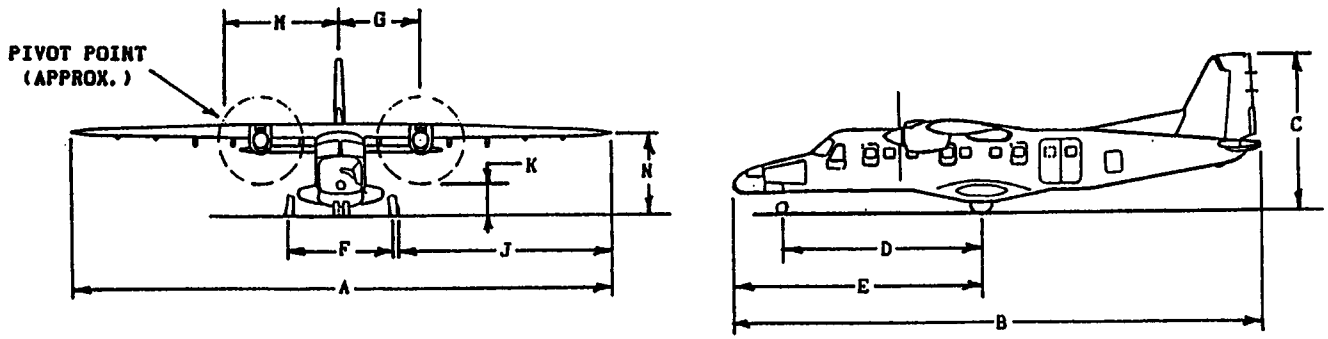

Figure A12-42. Dornier Gmb H

MODEL	MAXIMUM TAKEOFF WEIGHT	MAXIMUM LANDING WEIGHT	A	B	C	D	E	F	G	J	K	M	N	TURN RADIUS
DC-3	25,200 LB 11 431 KG	25,200 LB 11 431 KG	95'0" 28.96M	64'6" 19.66M	23'6" 7.16M	37'11" 11.56M	18'6" 5.64M	18'6" 5.64M	9'3" 2.82M	37'7" 11.46M	1'4" 0.41M	9'3" 2.82M	9'4" 2.84M	57'3" 17.45M

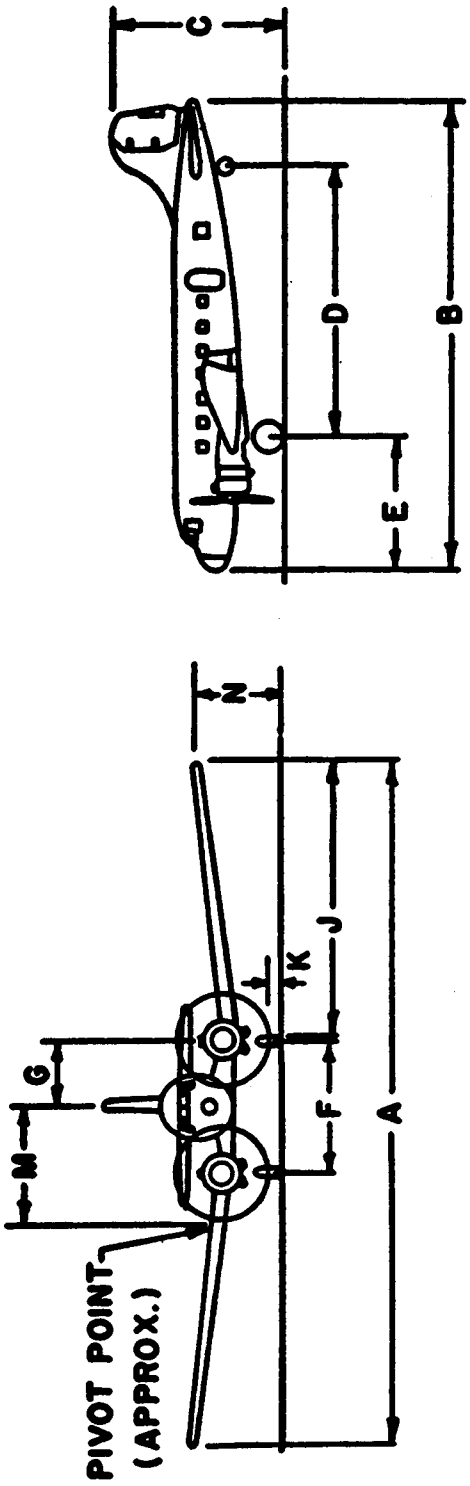

Figure A12-43. Douglas DC-3

MODEL	MAXIMUM TAKEOFF WEIGHT	MAXIMUM LANDING WEIGHT	A	B	C	D	E	F	G	H	J	K	L	M	N	TURN RADIUS
DC-4	73,000 LB 33 112 KG	63,500 LB 28 803 KG	117'6" 35.81M	93'11" 28.63M	27'11" 8.51M	27'5" 8.36M	36'0" 10.98M	24'8" 7.52M	12'4" 3.76M	26'4" 8.03M	44'7" 13.59M	2'2" 0.66M	3'9" 1.14M	13'9" 4.19M	13'6" 4.11M	86'2" 26.26M
DC-6	104,000 LB 47 174 KG	86,200 LB 39 100 KG	117'6" 35.81M	105'7" 32.18M	29'3" 8.92M	36'2" 11.02M	44'9" 13.64M	24'8" 7.52M	12'4" 3.76M	26'4" 8.03M	44'7" 13.59M	1'11" 0.58M	3'6" 1.07M	13'11" 4.24M	13'6" 4.11M	72'8" 22.15M
DC-7	143,000 LB 64 864 KG	111,000 LB 50 349 KG	127'6" 38.86M	112'3" 34.21M	31'8" 9.65M	39'6" 12.04M	48'1" 14.66M	34'8" 10.57M	17'4" 5.28M	31'4" 9.55M	44'7" 13.59M	1'3" 0.38M	3'10" 0.87M	17'4" 5.28M	13'6" 4.11M	81'1" 24.71M

NOTE: MODEL DC-4 HAS ROUNDED VERTICAL STABILIZER AND CIRCULAR CABIN WINDOWS.

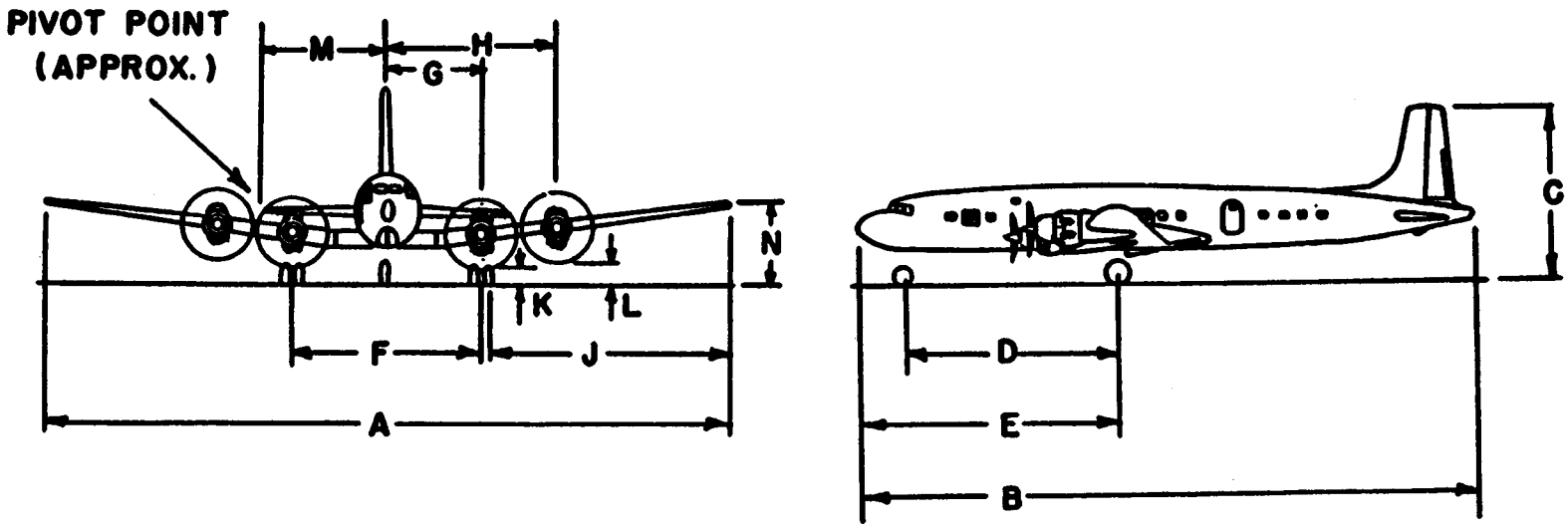

Figure A12-44. Douglas DC-4/6/7

MODEL	MAXIMUM TAKEOFF WEIGHT	MAXIMUM LANDING WEIGHT	A	B	C	D	E	F	G	J	K	M	N	TURN RADIUS
EMB-110P1	12,500 LB 5 670 KG	12,500 LB 5 670 KG	50'3" 15.32M	49'6" 15.09M	16'6" 5.03M	16'2" 4.93M	23'8" 7.21M	16'3" 4.95M	7'11" 2.41M	16'9" 5.11M	0'10" 0.25M	16'6" 5.03M	6'7" 2.01M	47'7" 14.50M
EMB-110P1/41	13,007 LB 5 900 KG	12,566 LB 5 700 KG												
EMB-110P2	12,500 LB 5 670 KG	12,500 LB 5 670 KG												
EMB-110P2/41	13,007 LB 5 900 KG	12,599 LB 5700 KG												

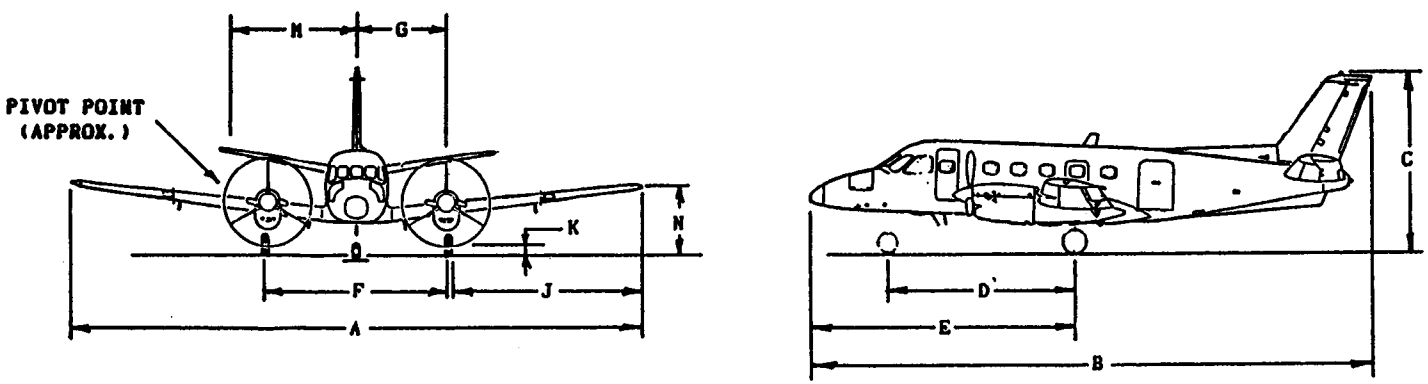

Figure A12-45. Embraer EmB 110

MODEL	MAXIMUM TAKEOFF WEIGHT	MAXIMUM LANDING WEIGHT	A	B	C	D	E	F	G	J	K	M	N	TURN RADIUS
EMB 120	11,500 LB 5 216 KG	11,250 LB 5 103 KG	64'11" 19.79M	65'7" 19.99M	20'10" 6.35M	22'11" 6.99M		21'7" 21.58M	10'10" 3.30M	20'6" 6.25M	1'9" 0.53M	21'8" 6.60M		51'8" 15.75M

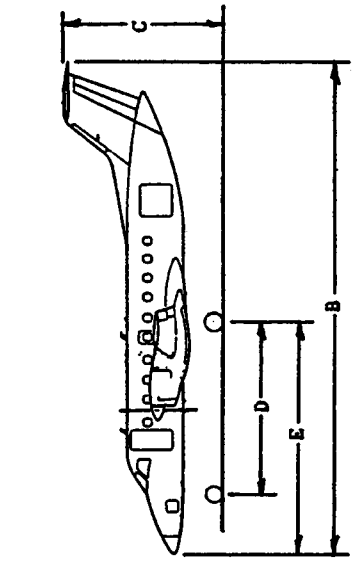

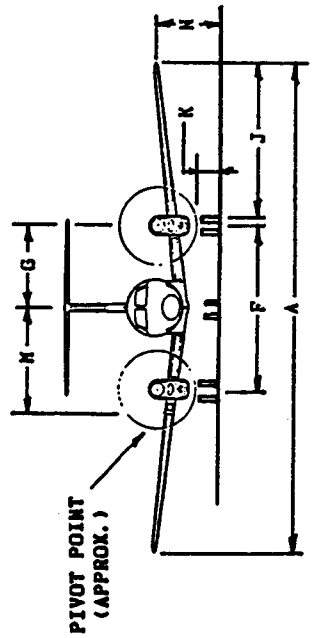

Figure A12-46. Embraer EmB 120

MODEL	MAXIMUM TAKEOFF WEIGHT	MAXIMUM LANDING WEIGHT	A	B	C	D	E	F	G	J	K	N	N	TURN RADIUS
FLYING BOXCAR	77,000 LB 34 927 KG	72,700 LB 32 976 KG	109'3" 33.32M	86'6" 26.38M	27'6" 8.38M			29'2" 8.89M		38'4" 11.68M	3'0" 0.91M		15'0" 4.56M	70'0" 21.34M

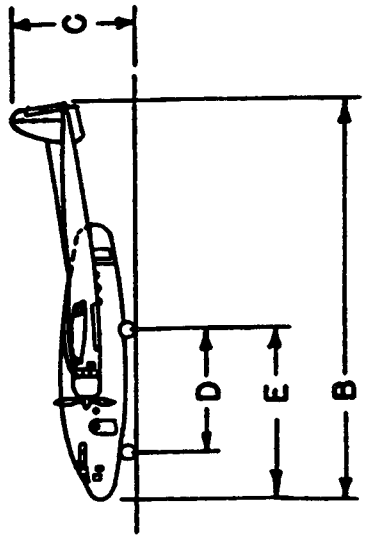

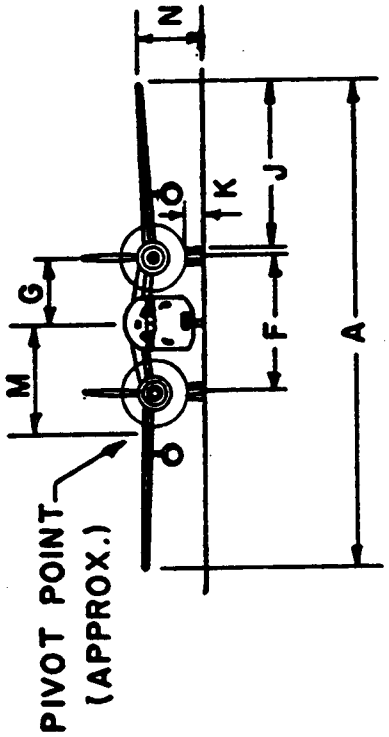

Figure A12-47. Fairchild C-119K Flying Boxcar

MODEL	MAXIMUM TAKEOFF WEIGHT	MAXIMUM LANDING WEIGHT	A	B	C	D	E	F	G	J	K	H	M	TURN RADIUS
PROVIDER	60,000 LB 27 216 KG	54,000 LB 24 494 KG	110'0" 33.52M	76'3" 23.24M	34'6" 10.52M			12'1" 3.68M	14'10" 4.52M	48'0" 14.63M	3'8" 1.12M	14'10" 4.52M	14'0" 4.27M	70'0" 21.34M

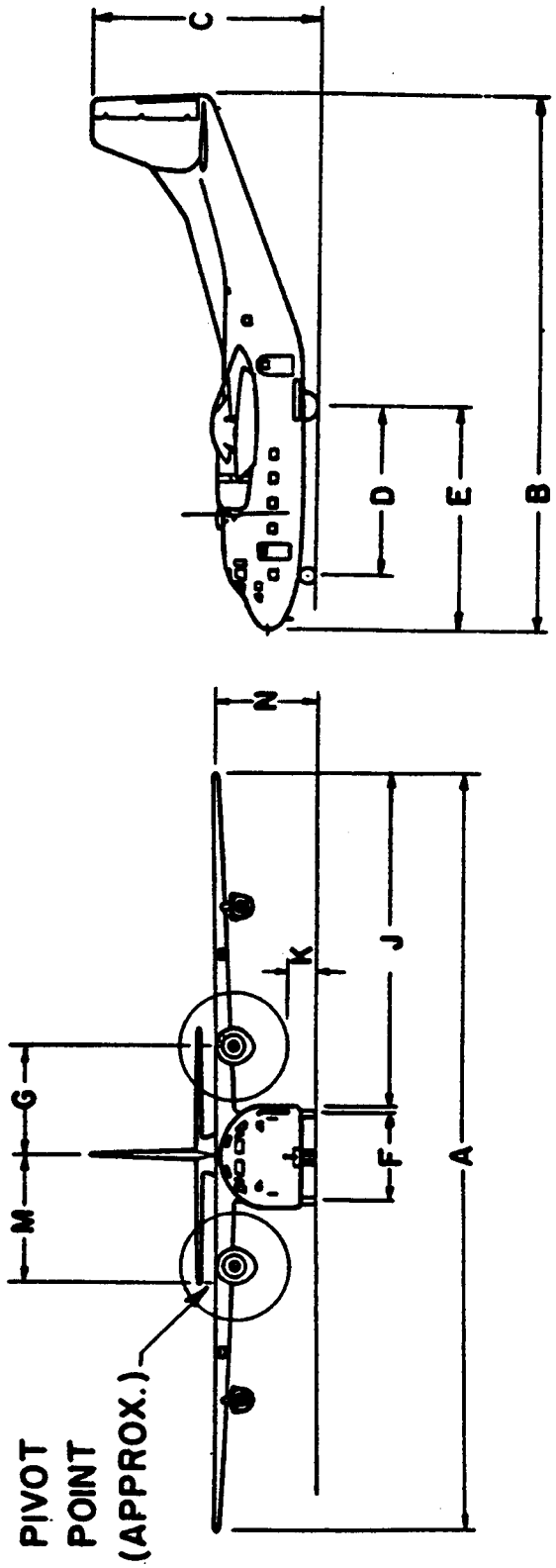

Figure A12-48. Fairchild C-123K Provider

MODEL	MAXIMUM TAKEOFF WEIGHT	MAXIMUM LANDING WEIGHT	A	B	C	D	E	F	G	J	K	M	N	TURN RADIUS
F-27, B	40,500 LB 18 370 KG	38,500 LB 17 463 KG	95'2" 29.52M	77'2" 23.52M	27'6" 8.38M	28'8" 8.73M	34'6" 10.52M	23'8" 7.22M	11'10" 3.61M	34'6" 10.52M	2'10" 0.87M	16'6" 5.03M	11'10" 3.61M	64'0" 19.51M
FH-227, C, E	43,500 LB 19 731 KG	43,000 LB 19 504 KG	95'2" 29.01M	83'1" 25.32M	27'6" 8.38M	34'7" 10.55M	40'3" 12.27M	23'8" 7.22M	11'10" 3.61M	34'9" 10.59M	3'2" 0.97M	12'4" 3.76M	11'10" 3.61M	59'7" 18.16M

NOTE: F-27A, J HAVE MAXIMUM (TAKEOFF) WEIGHT OF 42,000 LB (19 051 KG).
(LANDING) 40,000 LB (18 144 KG).

FH-227B, D HAVE MAXIMUM (TAKEOFF) WEIGHT OF 45,500 LB (20 638 KG).
(LANDING) 45,000 LB (20 412 KG).

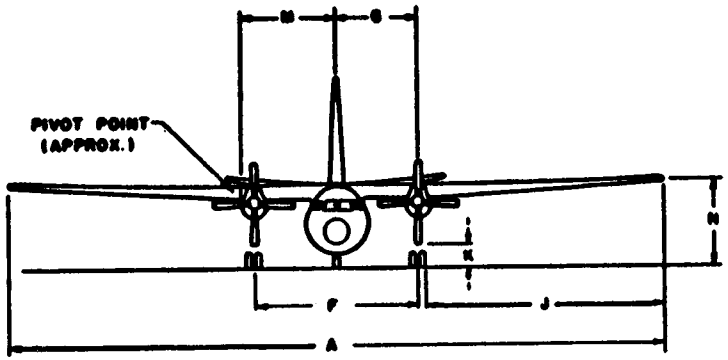

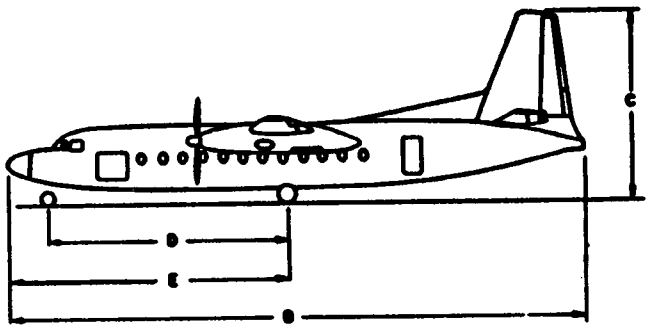

Figure A12-49. Fairchild F-27

MODEL	MAXIMUM TAKEOFF WEIGHT	MAXIMUM LANDING WEIGHT	A	B	C	D	E	F	G	J	K	M	N	NOTE	TURN RADIUS
100	40,500 LB 18 370 KG	40,000 LB 18 144 KG	95'2" 29.01M	77'2" 23.52M	27'11" 8.51M	28'8" 8.74M		23'8" 7.21M							
200, 400, 600	45,000 LB 20 412 KG	41,000 LB 18 597 KG	95'2" 29.01M	77'4" 23.57M	28'8" 8.74M	28'8" 8.74M	34'6" 10.52M	23'8" 7.21M	11'10" 3.61M	34'7" 10.54M		12'2" 3.71M	11'11" 3.63M	28'2" 8.59M	58'1" 17.70M
500	45,000 LB 20 412 KG	42,000 LB 19 051 KG	95'2" 29.01M	82'3" 25.07M	29'3" 8.92M	31'11" 9.73M	37'9" 11.51M	23'8" 7.21M	11'10" 3.61M	34'7" 10.54M		13'7" 4.14M	12'2" 3.71M	28'2" 8.59M	59'5" 18.11M

NOTE: CENTERLINE OF FUSELAGE TO CENTERLINE OF PYLON TANKS IF INSTALLED.

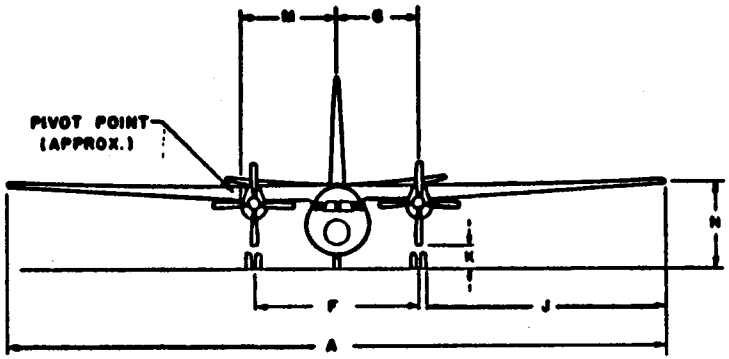

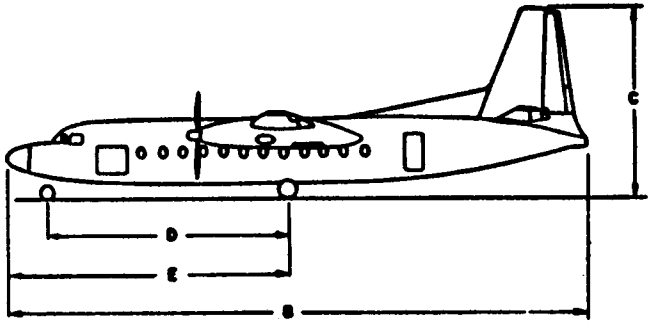

Figure A12-50. Fokker F-27

MODEL	MAXIMUM TAKEOFF WEIGHT	MAXIMUM LANDING WEIGHT	A	B	C	D	E	F	G	J	K	M	N	TURN RADIUS
1000	65,000 LB 29 484 KG	59,000 LB 26 762 KG	77'4" 23.57M	89'11" 27.42M	27'10" 8.48M	29'3" 8.89M		16'7" 5.11M	8'6" 2.59M	28'10" 8.78M	5'2" 1.60M	8.3" 2.51M	7'9" 2.37M	50'0" 15.24M
2000	65,000 LB 29 484 KG	59,000 LB 26 762 KG	77'4" 23.57M	97'2" 29.62M	27'10" 8.48M	33'11" 10.34M		16'7" 5.11M						
3000	73,000 LB 33 112 KG	64,000 LB 29 030 KG	82'3" 25.07M	89'11" 27.41M	27'10" 8.48M	29'3" 8.89M		16'7" 5.11M						
4000	73,000 LB 33 112 KG	66,500 LB 30 164 KG	82'3" 25.07M	97'2" 29.62M	27'10" 8.48M	33'11" 10.34M		16'7" 5.11M						
5000	70,800 LB 32 114 KG	64,000 LB 29 030 KG	82'3" 25.07M	89'11" 27.41M	27'10" 8.48M	29'3" 8.89M		16'7" 5.11M						
6000	73,000 LB 33 112 KG	66,500 LB 30 164 KG	82'3" 25.07M	97'2" 29.62M	27'10" 8.48M	33'11" 10.34M	46'4" 14.12M	16'7" 5.11M						

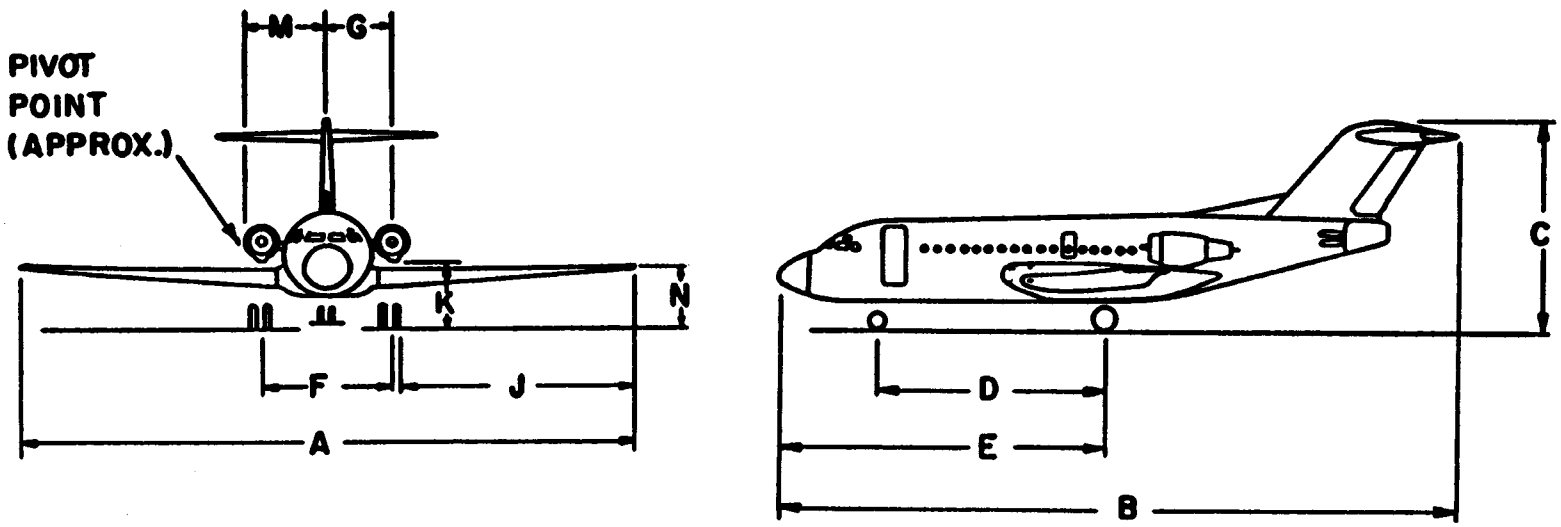

Figure A12-51. Fokker F-28

MODEL	MAXIMUM TAKEOFF WEIGHT	MAXIMUM LANDING WEIGHT	A	B	C	D	E	F	G	J	K	M	N	TURN RADIUS
24 24D, F	13,000 LB 5 897 KG	11,880 LB 5 389 KG	35'7" 10.85M	43'3" 13.18M	12'7" 3.84M	16'2" 4.98M	21'9" 6.63M	8'3" 2.51M	3'8" 1.12M	12'9" 3.89M	4'10" 1.49M	16'0" 4.88M	3'3" 0.99M	34'0" 10.36M
25 25B, C, D	15,000 LB 6 804 KG	13,300 LB 6 033 KG	35'7" 10.85M	47'7" 14.50M	12'7" 3.84M	16'2" 4.98M	26'0" 7.92M	8'3" 2.51M	3'8" 1.12M	13'1" 3.99M	4'10" 1.49M	16'0" 4.88M	3'3" 0.99M	34'0" 10.36M
25G	16,300 LB 7 394 KG	13,700 LB 6 214 KG	35'7" 10.85M	47'7" 14.50M	12'4" 3.76M	17'3" 5.26M	27'1" 8.25M	8'3" 2.51M	3'8" 1.12M	14'4" 4.26M	4'10" 1.49M		3'6" 1.07M	
28/29	15,000 LB 6 804 KG		43'9" 13.34M	47.7" 14.50M	12'4" 3.76M									
35/36	17,000 LB 7 711 KG	13,300 LB 6 033 KG	38'1" 11.61M	48'8" 14.83M	12'4" 3.76M									
35A/36A	18,300 LB 8 301 KG	15,300 LB 6 940 KG	39'6" 12.07M	48'8" 14.83M	12'4" 3.76M									
55/56 55C, ER, LR	21,500 LB 9 752 KG	18,000 LB 8 165 KG	43'9" 13.34M	55'1" 16.79M	14'8" 4.47M									

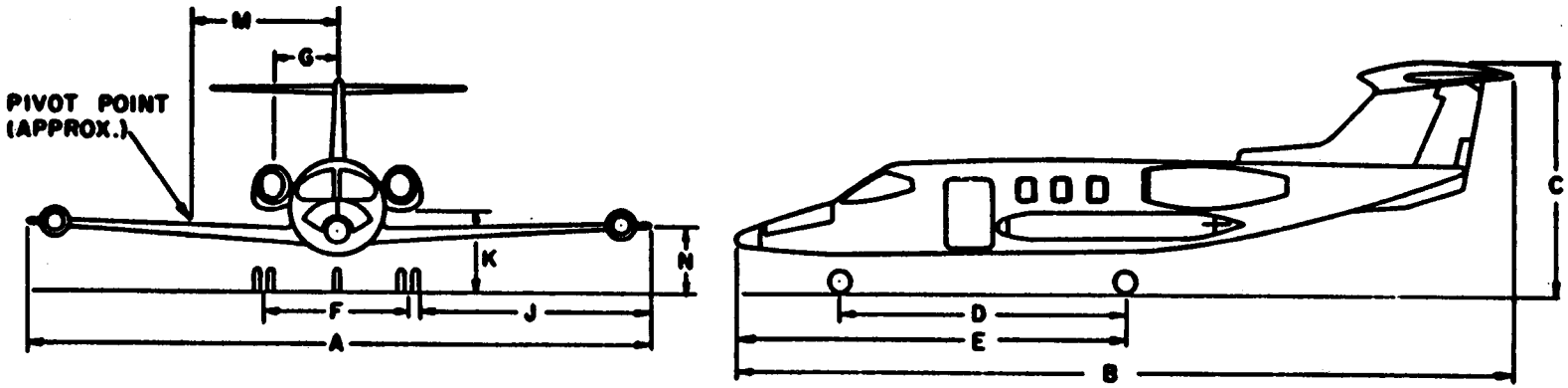

Figure A12-52. Gates Learjet

MODEL	MAXIMUM TAKEOFF WEIGHT	MAXIMUM LANDING WEIGHT	A	B	C	D	E	F	G	H	J	K	L	M	N	TURN RADIUS
880	184,500 LB 83 688 KG	137,000 LB 62 142 KG	120'0" 36.58M	129'4" 39.42M	36'0" 10.97M	53'1" 16.18M	64'10" 19.76M	18'10" 5.74M	22'2" 6.76M	41'4" 12.60M	49'3" 15.01M	2'8" 0.81M	3'11" 1.19M	19'5" 5.52M	10'11" 3.33M	84'0" 25.60M
990	246,200 LB 111 674 KG	202,000 LB 91 626 KG	120'0" 36.58M	139'2" 42.42M	39'6" 12.04M	57'3" 17.45M	68'11" 21.01M	19'11" 6.07M	22'2" 6.76M	41'4" 12.60M	48'10" 14.88M	2'9" 0.84M	4'0" 1.22M	29'3" 8.92M	12'9" 3.89M	93'8" 28.55M

NOTE: OPTIONAL TAKEOFF AND LANDING WEIGHTS.

880 193,500 LB (88 770 KG) MAXIMUM TAKEOFF WEIGHT.
155,000 LB (70 307 KG) MAXIMUM LANDING WEIGHT.

990 255,000 LB (115 666 KG) MAXIMUM TAKEOFF WEIGHT.

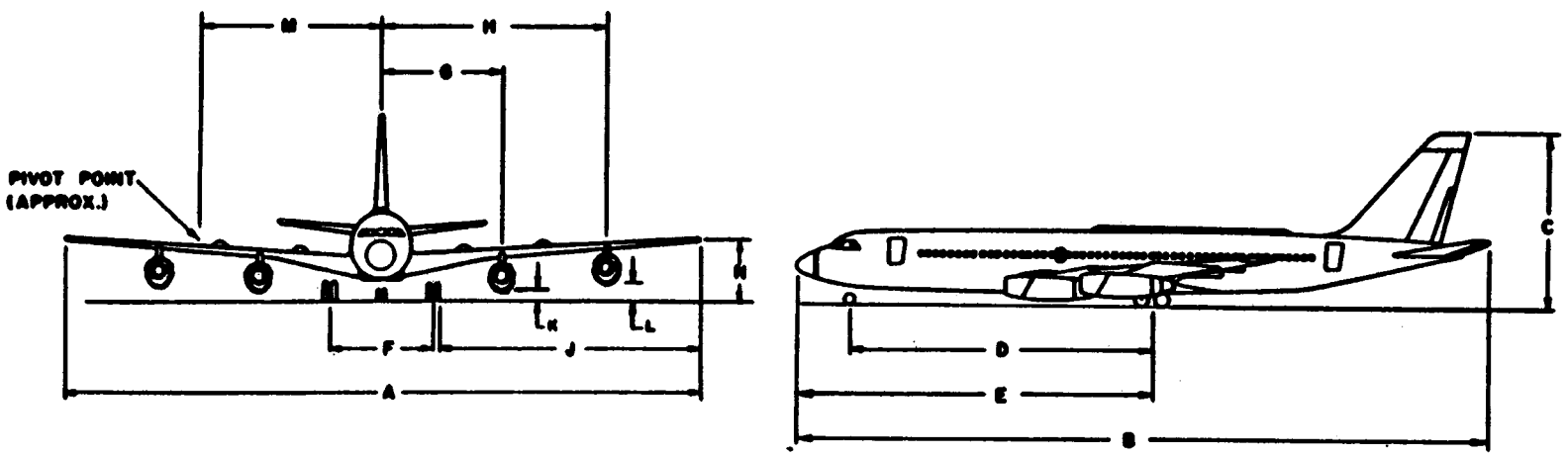

Figure A12-53. General Dynamics/Convair 880/990

MODEL	MAXIMUM TAKEOFF WEIGHT	MAXIMUM LANDING WEIGHT	A	B	C	D	E	F	G	J	K	M	N	TURN RADIUS
G-159C	33,600 LB 15 241 KG	30,400 LB 13 789 KG	78'4" 23.88M	75'4" 22.96M	23'0" 7.01M	19'10" 6.04M	26'8" 8.11M	24'7" 7.47M	12'1" 3.68M	25'6" 7.77M	1'6" 0.45M	12'1" 3.68M	8'8" 2.65M	51'7" 15.67M

NOTE: OPTIONAL MAXIMUM (TAKEOFF) WEIGHT 36,000 LB (16 329 KG).
(LANDING) 34,285 LB (15 551 KG).

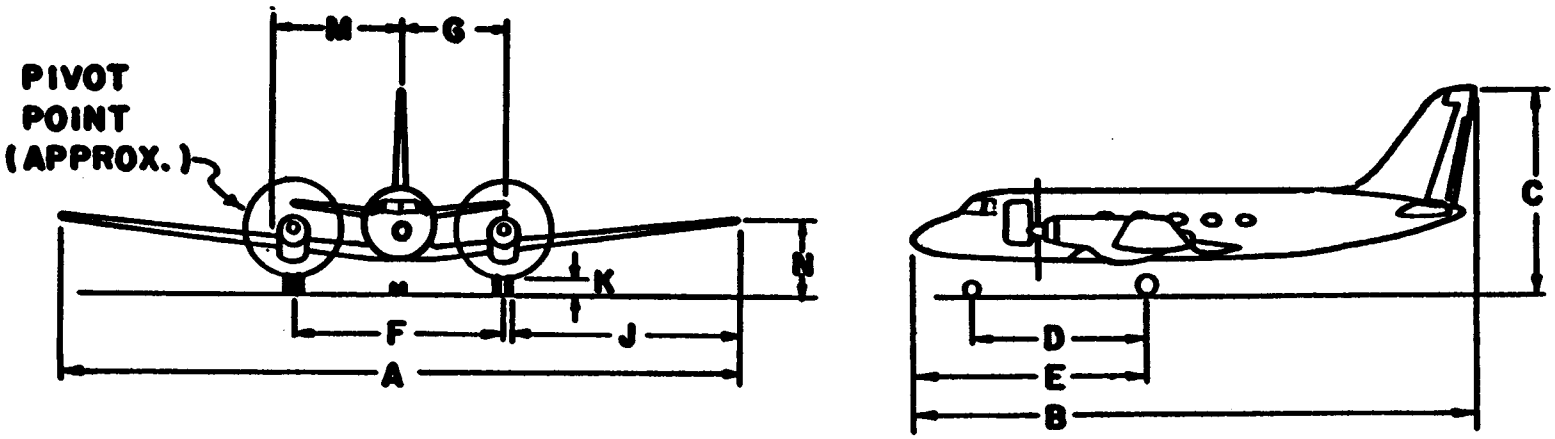

Figure A12-54. Grumman Gulfstream I

MODEL	MAXIMUM TAKEOFF WEIGHT	MAXIMUM LANDING WEIGHT	A	B	C	D	E	F	G	J	K	M	N	TURN RADIUS
II	65,300 LB 29 620 KG	58,500 LB 26 535 KG	68'10" 20.98M	79'11" 24.36M	24'6" 7.47M	33'4" 10.16M	40'5" 12.32M	13'8" 4.15M	6'3" 1.91M	26'8" 8.11M	8'10" 2.69M	6'9" 2.07M	6'0" 1.83M	45'0" 13.72M
II-TT	65,300 LB 29 620 KG		71'8" 21.84M	79'11" 24.36M	24'6" 7.47M									
III	69,700 LB 31 615 KG	58,500 LB 26 535 KG	77'10" 23.72M	83'1" 25.32M	24'5" 7.44M									47'6" 14.48M
IV	71,780 LB 32 559 KG	58,500 LB 26 535 KG	77'10" 23.72M	87'10" 26.77M	24'5" 7.44M									48'2" 14.68M

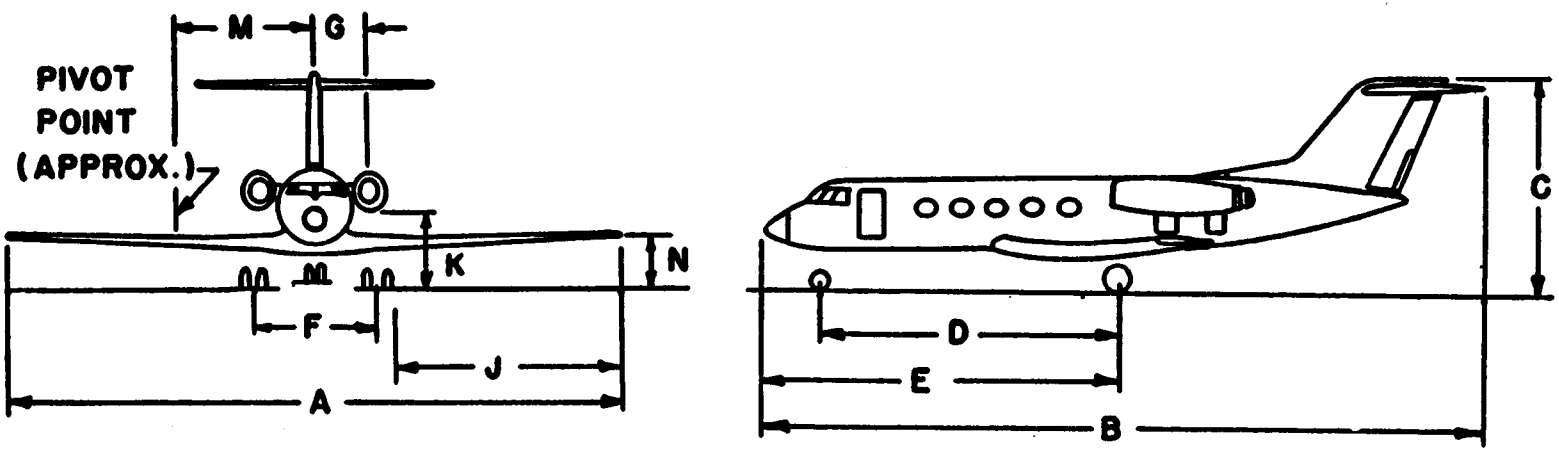

Figure A12-55. Grumman Gulfstream II

BUILDER	MODEL	NAME	MAXIMUM TAKEOFF WEIGHT	MAXIMUM LANDING WEIGHT	A	B	C	D	F	DRAFT	NUMBER SEATS	TURN RADIUS
GRUMMAN	G-64/ G-111	ALBATROSS	31,150 LB 14 129 KG	31,150 LB 14 129 KG	96'8" 29.46M	62'10" 19.15M	25'10" 7.87M	17'6" 5.33M	17'8" 5.38M	3'6" 1.07M	28	

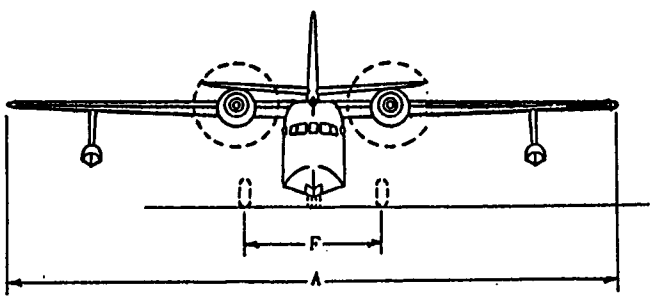

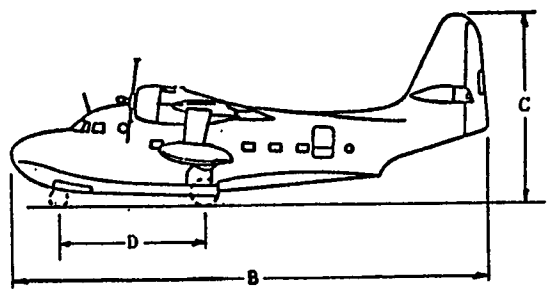

Figure A12-56. Grumman G-64/G-III

BUILDER	MODEL	NAME	MAXIMUM TAKEOFF WEIGHT	MAXIMUM LANDING WEIGHT	A	B	C	D	F	DRAFT	NUMBER SEATS	TURN RADIUS
GRUMMAN	G-73	MALLARD	12,750 LB 5 783 KG	12,750 LB 5 783 KG	66'8" 20.32M	48'4" 14.73M	18'9" 5.72M	14'10" 4.52M	12'10" 3.91M		10	

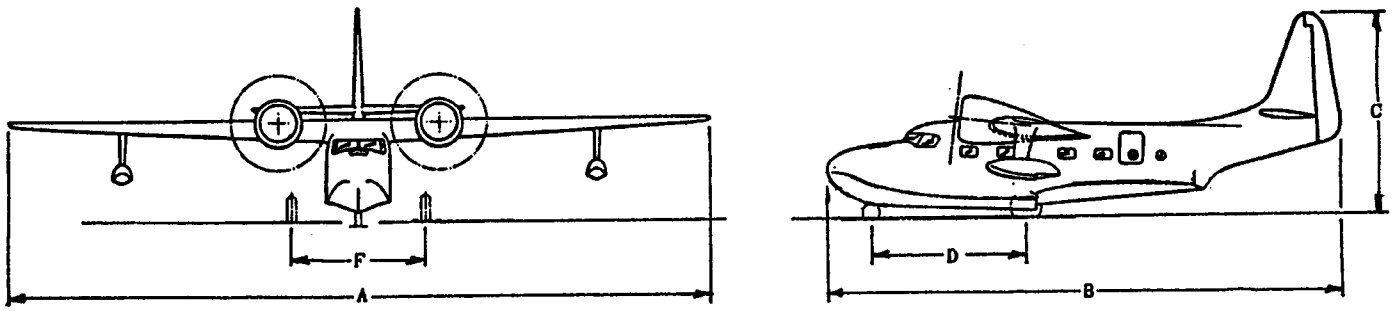

Figure A12-57. Grumman G-73

MODEL	MAXIMUM TAKEOFF WEIGHT	MAXIMUM LANDING WEIGHT	A	B	C	D	E	F	G	J	K	M	N	TURN RADIUS
HFB-320	20,280 LB 9 199 KG	19,400 LB 8 800 KG	47'6" 14.48M	54'6" 16.61M	16'2" 4.93M	22'1" 6.73M	28'2" 8.58M	7'9" 2.39M	4'8" 1.42M	19'7" 5.97M	5'11" 1.80M	8'3" 2.51M	7'3" 2.21M	29'5" 8.94M

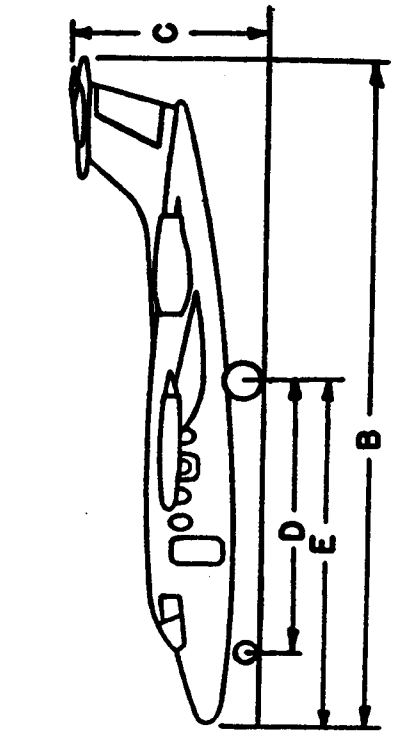

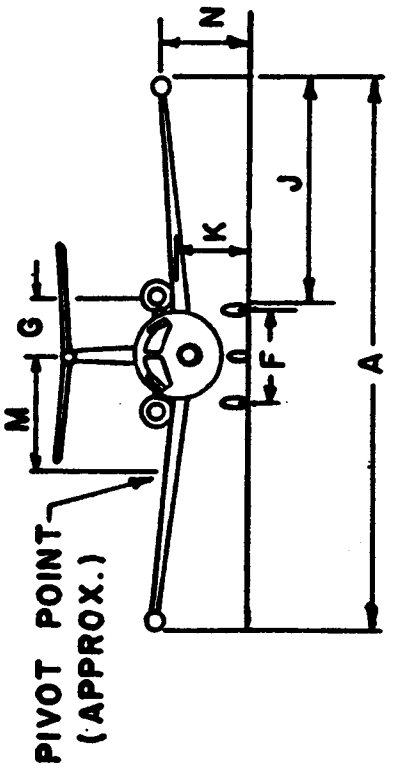

Figure A12-58. Hamburger-Flugzeubau HFB-320 Hansa

MODEL	MAXIMUM TAKEOFF WEIGHT	MAXIMUM LANDING WEIGHT	A	B	C	D	F	NUMBER SEATS	TURN RADIUS
DH.104	8,950 LB 4 060 KG	8,500 LB 3 856 KG	57'0" 17.61M	39'3" 11.97M	13'4" 4.07M		13'8" 4.17M	9	35'4" 10.83M

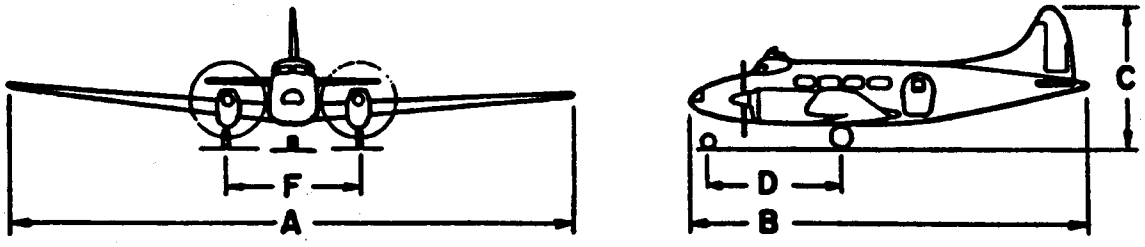

Figure A12-59. Hawker Siddeley DH. 104 Dove

MODEL	MAXIMUM TAKEOFF WEIGHT	MAXIMUM LANDING WEIGHT	A	B	C	D	E	F	G	H	J	K	L	M	N	TURN RADIUS
DH.114	13,500 LB 6 123 KG	13,150 LB 5 965 KG	71'6" 21.79M	48'6" 14.78M	15'7" 4.75M	14'5" 4.39M		16'8" 5.14M			15'0" 4.57M					

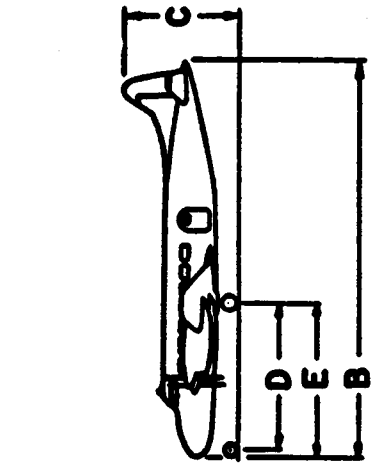

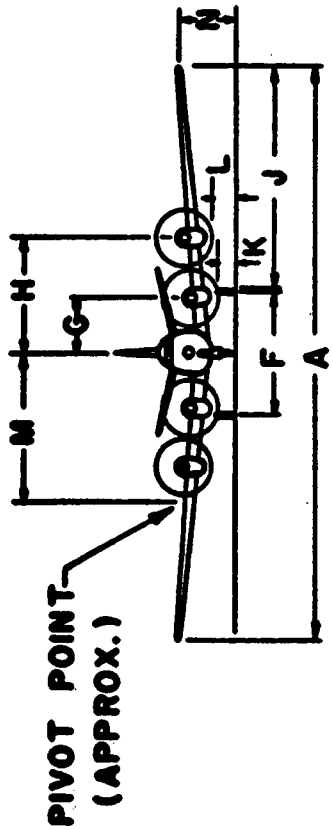

Figure A12-60. Hawker Siddeley DH. 114 Heron

MODEL	MAXIMUM TAKEOFF WEIGHT	MAXIMUM LANDING WEIGHT	A	B	C	D	E	F	G	J	K	M	N	TURN RADIUS
400A	23,300 LB 10 569 KG	20,000 LB 9 072 KG	47'0" 14.33M	47'5" 14.45M	16'6" 5.08M	18'9" 5.72M	26'3" 8.00M	9'2" 2.79M	4'2" 1.27M	18'7" 5.66M	4'9" 1.45M	19'0" 5.79M	4'4" 1.32M	43'0" 13.11M
600A	25,000 LB 11 340 KG	22,000 LB 9 979 KG	47'0" 14.33M	50'6" 15.39M	17'3" 5.26M									
700A	24,200 LB 10 977 KG	22,000 LB 9 979 KG	47'0" 14.33M	50'8" 15.44M	17'7" 5.36M									
800A	27,400 LB 12 428 KG	23,350 LB 10 591 KG	51'5" 15.67M	51'2" 15.60M	17'6" 5.33M									

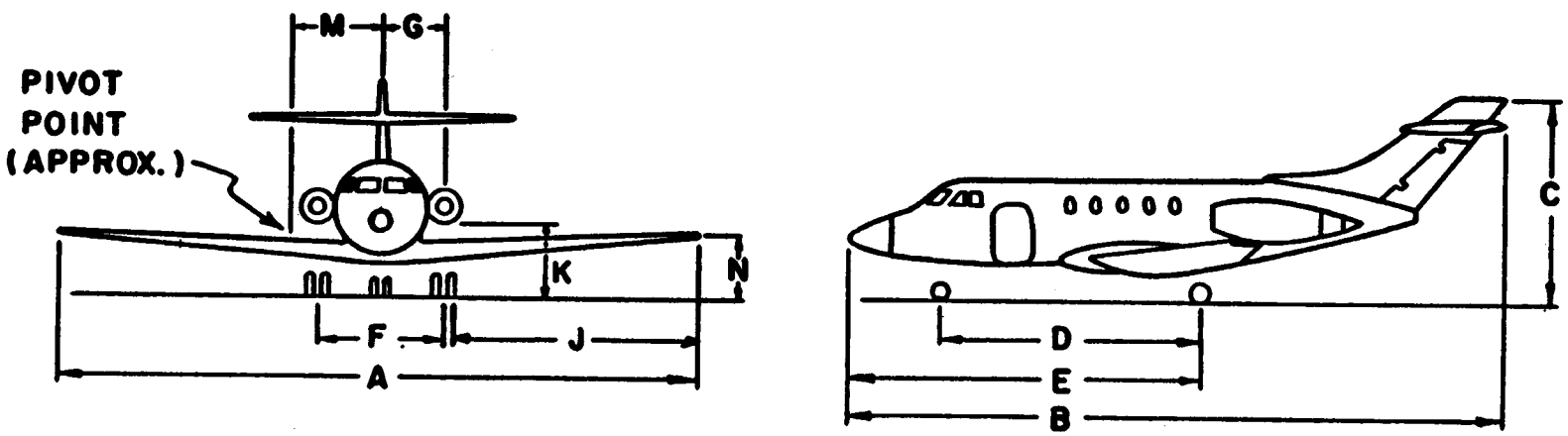

Figure A12-61. Hawker Siddeley HS-125

MODEL	MAXIMUM TAKEOFF WEIGHT	MAXIMUM LANDING WEIGHT	A	B	C	D	E	F	G	J	K	M	N	TURN RADIUS
2A	44,490 LB 20 180 KG	42,100 LB 19 096 KG	98'6" 30.02M	67'0" 20.49M	24'10" 7.63M	20'8" 6.32M		24'9" 7.60M		35'11" 10.95M	2'0" 0.61M			59'0" 17.98M
2B	46,500 LB 21 092 KG		102'6" 31.24M	67'0" 20.49M	24'10" 7.63M									

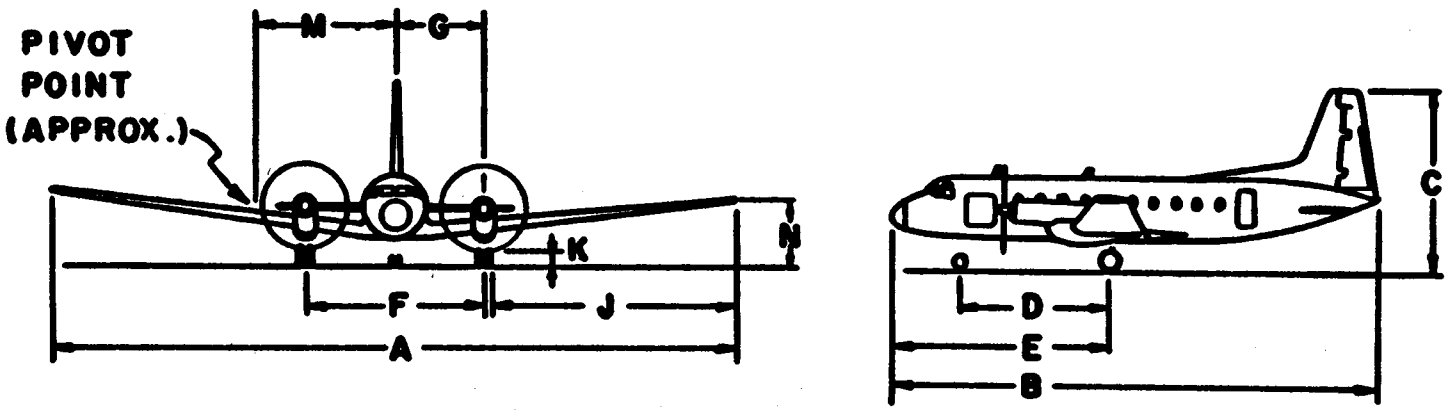

Figure A12-62. Hawker Siddeley HS-748

MODEL	MAXIMUM TAKEOFF WEIGHT	MAXIMUM LANDING WEIGHT	A	B	C	D	E	F	G	H	J	K	L	M	N	TURN RADIUS
Il-62	357,000 LB 161 932 KG	252,000 LB 114 305 KG	141'9" 43.20M	174'4" 53.13M	40'6" 12.34M	80'5" 24.57M		22'4" 6.80M			58'0" 17.76M					

NOTE: OPTIONAL TAKEOFF WEIGHT 367,760 LB (166 813 KG).

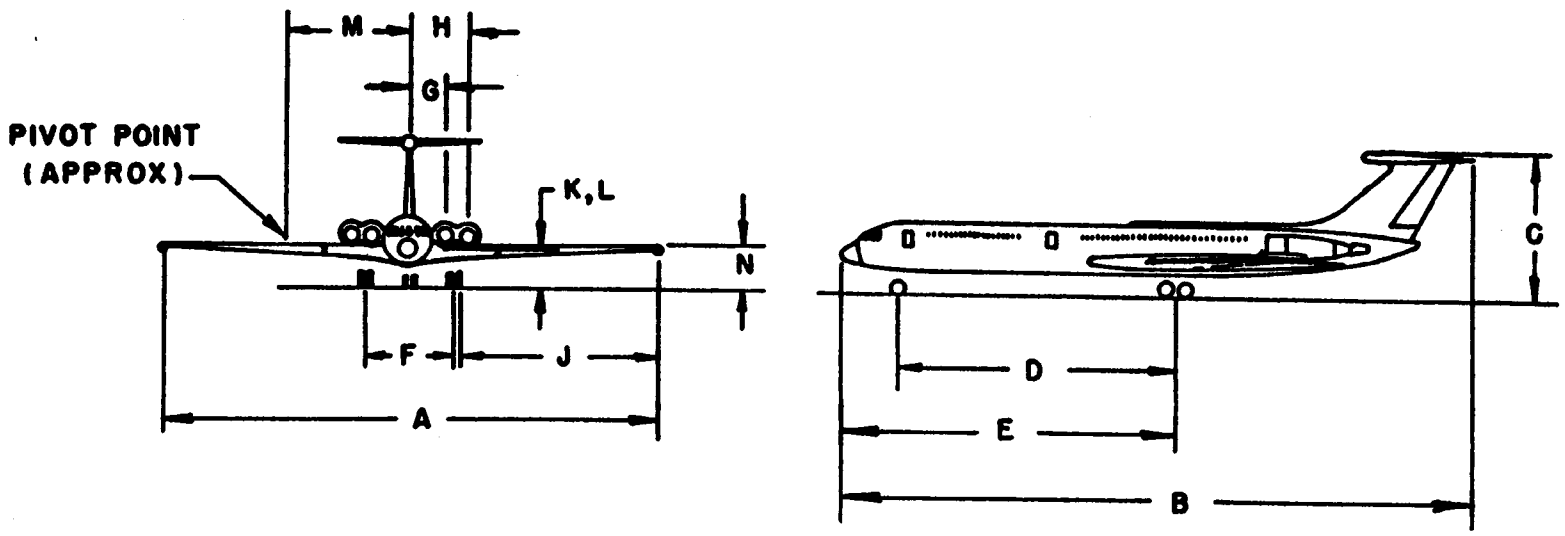

Figure A12-63. Ilyushin IL-62

MODEL	MAXIMUM TAKEOFF WEIGHT	MAXIMUM LANDING WEIGHT	A	B	C	D	E	F	G	J	K	M	N	TURN RADIUS
1121	16,800 LB	16,000 LB	43'4"	50'5"	15'9"	23'9"		11'2"	3'4"	15'9"	5'2"	23'8"	4'11"	45'5"
	7 620 KG	7 257 KG	13.21M	15.37M	4.80M	7.24M		3.40M	1.02M	4.80M	1.60M	7.21M	1.50M	13.84M
1123	20,500 LB	19,000 LB	43'4"	52'3"	15'9"	23'9"		12'0"	3'4"	15'9"	5'2"			
	9 299 KG	8 618 KG	13.21M	15.93M	4.80M	7.24M		3.66M	1.02M	4.80M	1.60M			
1124	22,850 LB	19,000 LB	44'10"	52'3"	15'10"	25'7"	28'5"	11'0"	4'2"	16'10"	4'3"		4'0"	
	10 365 KG	8 618 KG	13.67M	15.93M	4.83M	7.80M	8.66M	3.35M	1.27M	5.13M	1.30M		1.22M	
1124A	23,500 LB	19,000 LB	44'10"	52'3"	15'10"	25'7"	28'5"	11'0"	4'2"	16'10"	4'3"		4'0"	
	10 659 KG	8 618 KG	13.67M	15.93M	4.83M	7.80M	8.66M	3.35M	1.27M	5.13M	1.30M		1.22M	
1125	23,500 LB	20,700 LB	52'8"	55'7"	18'2"	24'1"	30'9"	9'1"	4'4"	21'1"	7'0"		3'10"	
	10 659 KG	9 389 KG	16.05M	16.94M	5.54M	7.34M	9.37M	2.77M	1.32M	6.43M	2.13M		1.17M	

NOTE: MODEL 1121 FORMERLY PRODUCED BY NORTH AMERICAN ROCKWELL AS "JET COMMANDER."

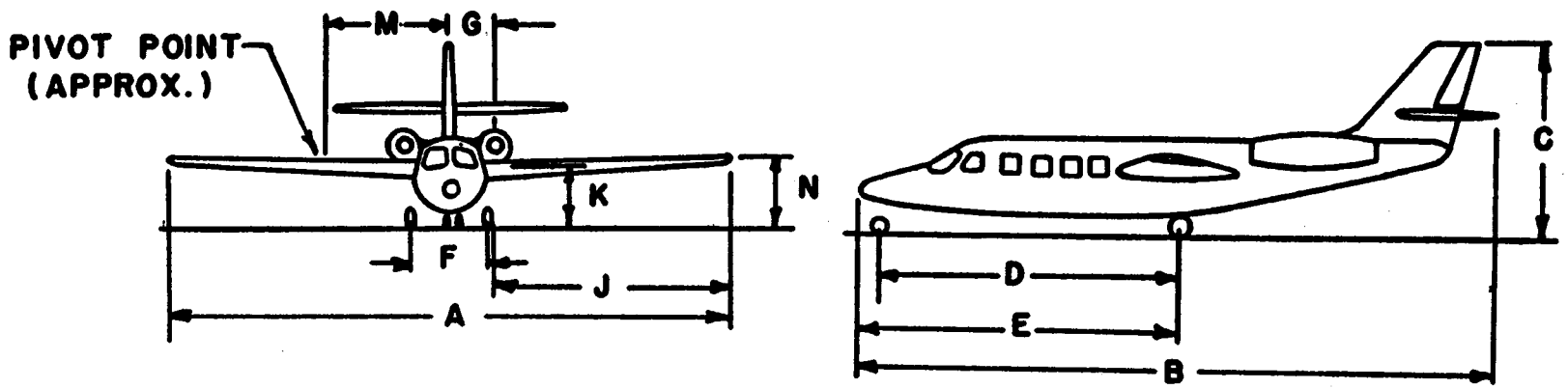

Figure A12-64. Israel Aircraft Industries Westwind

MODEL	MAXIMUM TAKEOFF WEIGHT	MAXIMUM LANDING WEIGHT	A	B	C	D	E	F	G	H	J	K	L	M	N	TURN RADIUS
749A	107,000 LB 48 534 KG	89,500 LB 40 597 KG	123'0" 37.49M	95'2" 29.01M	22'5" 6.83M	33'0" 10.06M	39'3" 11.96M	28'0" 8.53M	14'0" 4.27M	29'10" 9.09M	45'5" 13.84M	1'9" 0.53M	3'11" 1.19M	31'1" 9.47M	15'11" 4.85M	92'7" 28.22M
1049	120,000 LB 54 431 KG	101,500 LB 46 040 KG	123'0" 37.49M	113'7" 34.62M	24'10" 7.57M	43'7" 13.28M	49'11" 15.21M	28'0" 8.53M	14'0" 4.27M	29'10" 9.09M	45'5" 13.84M	1'9" 0.53M	3'11" 1.19M	26'0" 7.92M	16'3" 4.95M	87'6" 20.07M
1649A	160,000 LB 72 575 KG	123,000 LB 55 792 KG	150'0" 45.72M	116'2" 35.41M	23'5" 7.14M	45'7" 13.89M	54'4" 16.56M	38'5" 11.71M	19'2" 5.84M	37'4" 11.38M	53'10" 16.41M	1'5" 0.44M	3'7" 1.09M	28'4" 8.64M	16'11" 5.16M	103'5" 32.13M

NOTE: MODEL 1049C HAS MAXIMUM (TAKEOFF) WEIGHT OF 137,500 LB (62 369 KG).
(LANDING) 113,000 LB (51 256 KG).

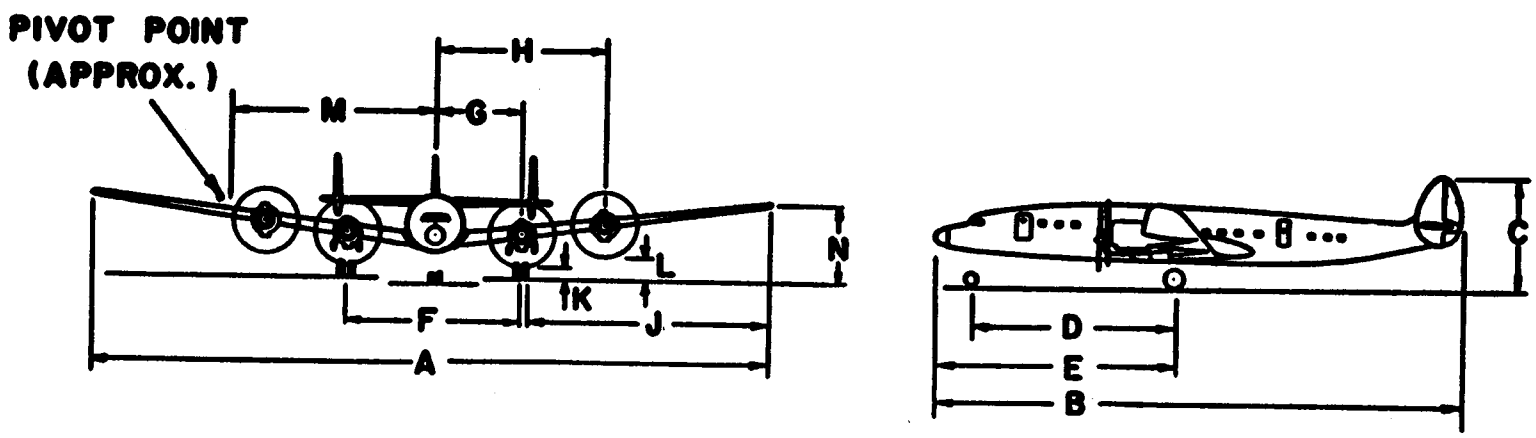

Figure A12-65. Lockheed Constellation and Super Constellation

MODEL	MAXIMUM TAKEOFF WEIGHT	MAXIMUM LANDING WEIGHT	A	B	C	D	E	F	G	H	J	K	L	M	N	TURN RADIUS
C-5B	769,000 LB 348 813 KG	635,850 LB 288 417 KG	222'8" 67.87M	247'10" 75.54M	65'1" 19.84M	82'1" 25.02M	116'11" 35.64M	37'5" 11.40M	39'8" 12.09M	61'11" 18.87M	92'8" 28.25M	10'9" 3.28M	7'11" 2.41M	38'4" 11.68M	13'7" 4.14M	162'6" 49.53M

NOTE: OPTIONAL TAKEOFF WEIGHT 837,000 LB (379 657 KG).

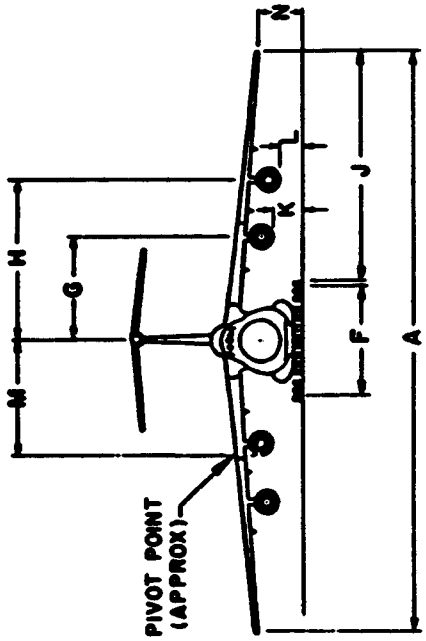

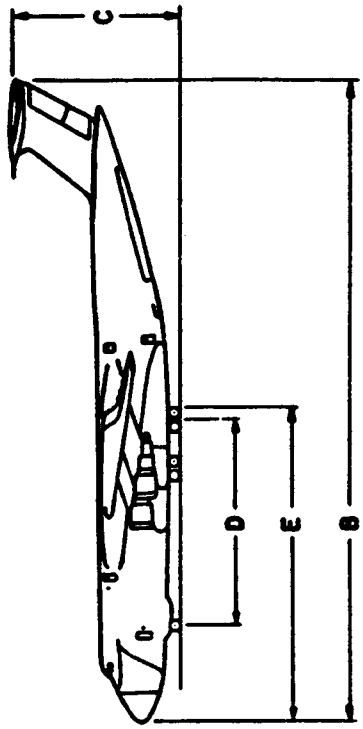

Figure A12-66. Lockheed C-5B Galaxy

MODEL	MAXIMUM TAKEOFF WEIGHT	MAXIMUM LANDING WEIGHT	A	B	C	D	E	F	G	H	J	K	L	M	N	TURN RADIUS
C-141A	316,600 LB 143 607 KG	316,100 LB 143 381 KG	159'11" 48.74M	145'0" 44.19M	39'4" 11.99M	55'0" 16.76M	60'7" 18.46M	17'6" 5.34M	23'9" 7.24M	38'4" 11.68M	70'0" 21.34M	3'11" 1.19M	3'4" 1.01M	10'0" 3.05M	6'0" 1.83M	92'0" 28.04M
C-141B	343,000 LB 155 582 KG		159'11" 48.74M	168'4" 51.31M	39'4" 11.99M											

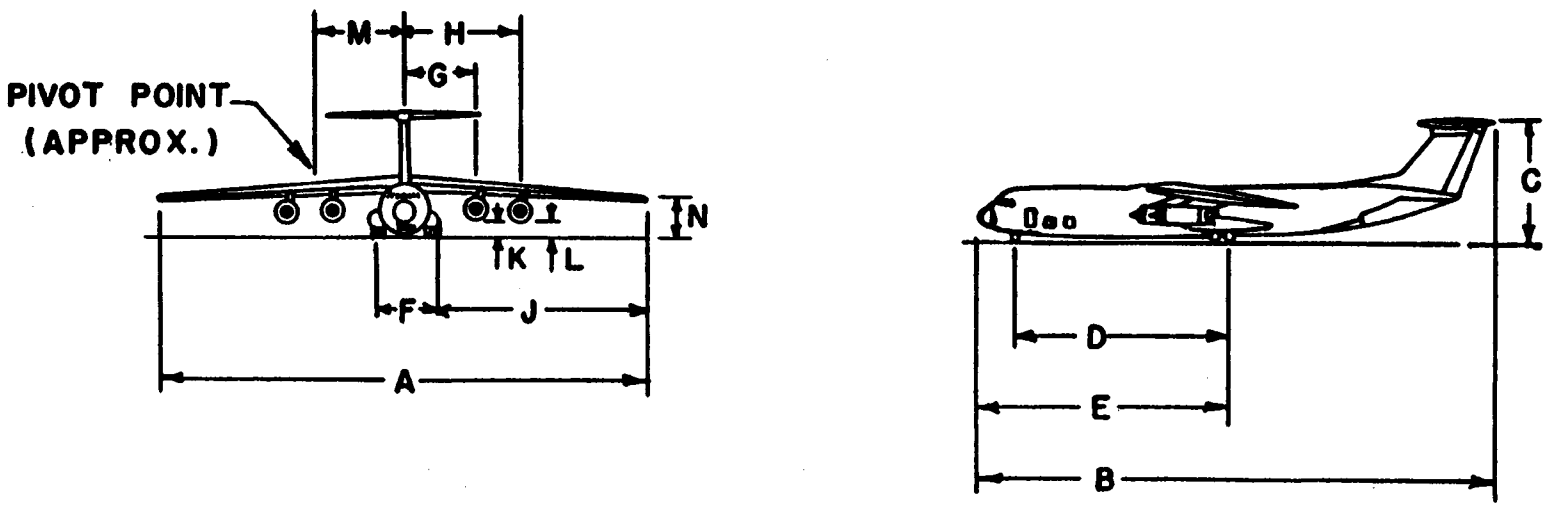

Figure A12-67. Lockheed C-141 Starlifter

MODEL	MAXIMUM TAKEOFF WEIGHT	MAXIMUM LANDING WEIGHT	A	B	C	D	E	F	G	H	J	K	L	M	N	TURN RADIUS
L-188	116,000 LB 52 617 KG	95,650 LB 43 386 KG	99'0" 29'91M	104'7" 31.88M	33'8" 10.26M	37'0" 11.27M	48'3" 14.71M	31'2" 9.50M	15'7" 4.75M	29'9" 9.07M	37'9" 9.98M	1'3" 0.33M	2'6" 0.76M	15'7" 4.75M	10'11" 3.33M	65'1" 19.84M

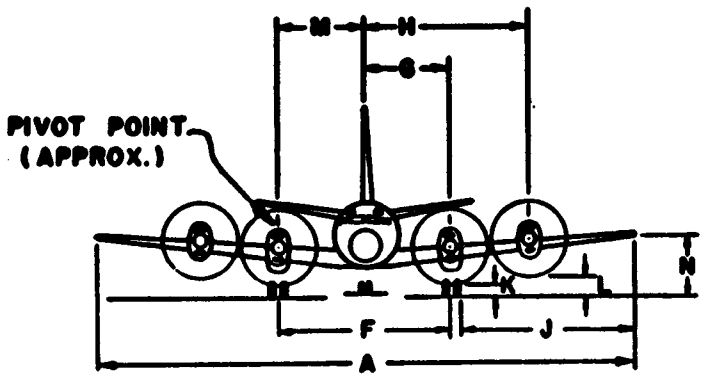

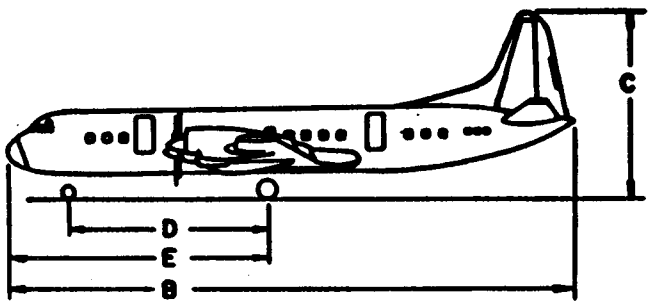

Figure A12-68. Lockheed L-188 Electra II

MODEL	MAXIMUM TAKEOFF WEIGHT	MAXIMUM LANDING WEIGHT	A	B	C	D	E	F	G	H	J	K	L	M	N	TURN RADIUS
L-100-20	155,000 LB 70 307 KG	130,000 LB 58 967 KG	132'7" 40.41M	106'1" 32.33M	39'4" 11.98M	37'1" 11.30M	48'7" 14.80M	14'3" 4.34M	16'9" 5.11M	33'4" 10.16M	57'5" 17.50M	5'11" 1.80M	6'11" 2.11M	12'0" 3.65M	15'4" 4.67M	88'0" 26.82M
L-100-30	155,000 LB 70 307 KG	135,000 LB 61 235 KG	132'7" 40.41M	112'9" 34.36M	39'2" 11.93M	40'5" 12.31M	51'11" 15.81M	14'3" 4.34M	16'9" 5.11M	33'4" 10.16M	57'5" 17.50M	5'11" 1.80M	6'11" 2.11M	14'0" 4.27M	15'3" 4.64M	90'0" 27.43M
C-130H	175,000 LB 79 379 KG	155,000 LB 70 307 KG	132'7" 40.41M	97'9" 29.79M	39'5" 12.01M	32'1" 9.78M	43'7" 13.28M	14'3" 4.34M	16'9" 5.11M	33'4" 10.16M	58'4" 17.78M	5'8" 1.73M			13'8" 4.17M	85'0" 25.91M

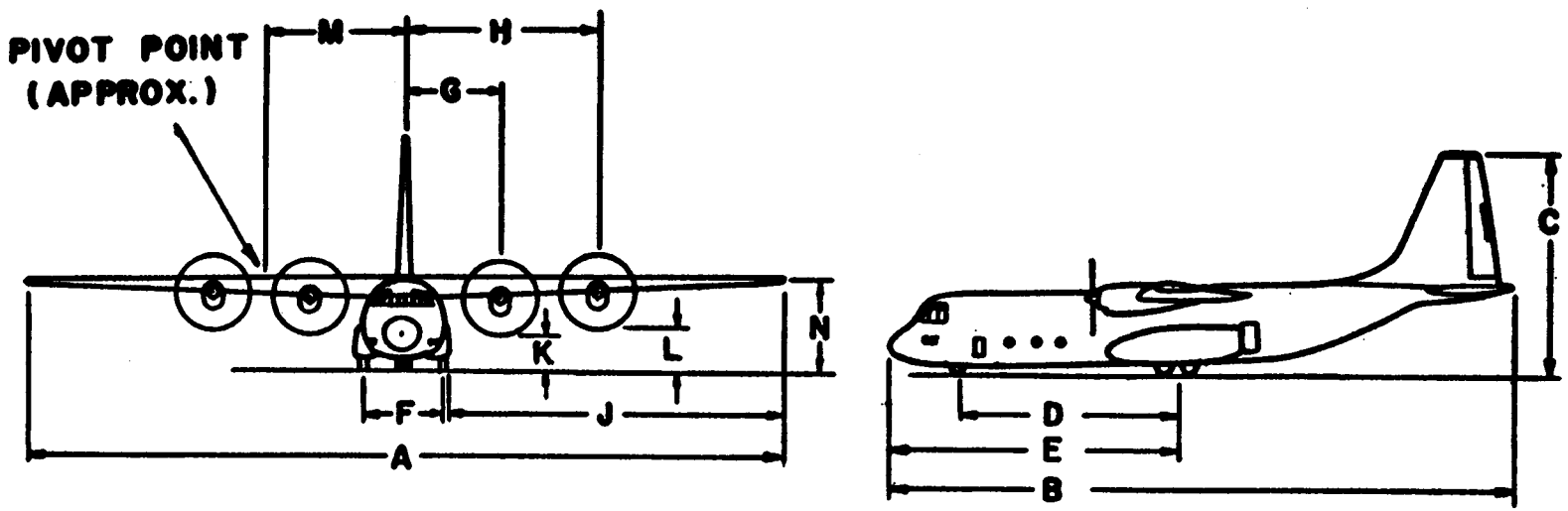

Figure A12-69. Lockheed L-100 Hercules

MODEL	MAXIMUM TAKEOFF WEIGHT	MAXIMUM LANDING WEIGHT	A	B	C	D	E	F	G	J	K	M	N	P	TURN RADIUS
1	430,000 LB	358,000 LB	155'4"	177'8"	55'10"	70'0"	99'9"	36'0"	34'10"	56'8"	2'11"	38'10"	16'1"	18'9"	121'3"
	195 045 KG	162 386 KG	47.35M	54.15M	17.02M	21.34M	30.40M	10.97M	10.62M	17.27M	0.89M	11.84M	4.90M	5.72M	36.96M
100	466,000 LB	368,000 LB	155'4"	177'8"	55'10"	70'0"	99'9"	36'0"	34'10"	56'8"	2'11"	38'10"	16'1"	18'9"	121'3"
	211 374 KG	166 922 KG	47.35M	54.15M	17.02M	21.34M	30.40M	10.97M	10.62M	17.27M	0.89M	11.84M	4.90M	5.72M	36.96M
200	466,000 LB	368,000 LB	155'4"	177'8"	55'10"	70'0"	99'9"	36'0"	34'10"	56'8"	2'11"	38'10"	16'1"	18'9"	121'3"
	211 374 KG	166 922 KG	47.35M	54.15M	17.02M	21.34M	30.40M	10.97M	10.62M	17.27M	0.89M	11.84M	4.90M	5.72M	36.96M
500	496 000 LB	368,000 LB	155'4"	164'2"	55'10"	61'8"	91'5"	36'0"	34'10"	56'8"	2'11"	34'0"	16'10"	20'0"	116'10"
	224 982 KG	166 922 KG	47.35M	50.04M	17.02M	18.80M	27.86M	10.97M	10.62M	17.27M	0.89M	10.36M	5.13M	6.10M	35.61M
500	496,000 LB	368,000 LB	164'4"	164'2"	55'10"	61'8"	91'5"	36'0"	34'10"	61'2"	2'11"	34'0"	16'10"	20'0"	122'0"
EX. WING	224 982 KG	166 922 KG	50.09M	50.04M	17.02M	18.80M	27.86M	10.97M	10.62M	18.64M	0.89M	10.36M	5.13M	6.10M	37.19M

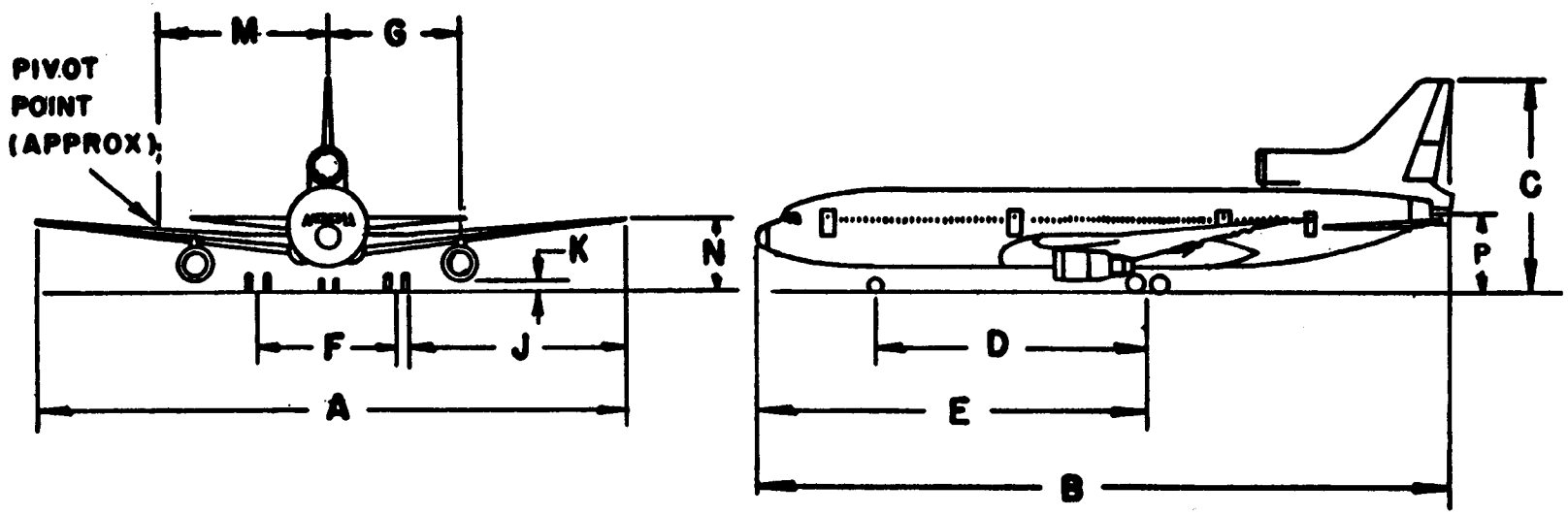

Figure A12-70. Lockheed L-1011 Tristar

MODEL	MAXIMUM TAKEOFF WEIGHT	MAXIMUM LANDING WEIGHT	A	B	C	D	E	F	G	H	J	K	L	M	N	TURN RADIUS
1329	42,000 LB 19 501 KG	35,000 LB 15 876 KG	54'5" 16.29M	60'5" 18.42M	20'5" 6.22M	20'7" 6.28M	34'11" 10.65M	12'4" 3.76M	5'7" 1.71M	7'11" 2.42M	19'4" 5.90M	5'2" 1.60M	5'2" 1.60M	7'2" 2.19M	4'5" 1.34M	43'4" 13.21M

JETSTAR II HAS OPTIONAL MAXIMUM (TAKEOFF) WEIGHT OF 43,750 LB (19 845 KG).
(LANDING) 36,000 LB (16 329 KG).

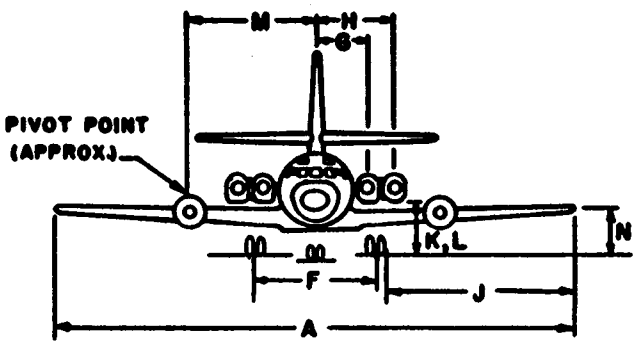

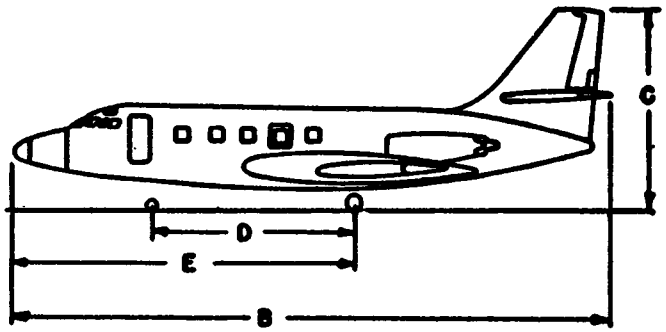

Figure A12-71. Lockheed L-1329 Jetstar

MODEL	MAXIMUM TAKEOFF WEIGHT	MAXIMUM LANDING WEIGHT	A	B	C	D	E	F	G	J	K	M	N	TURN RADIUS
404	44,900 LB 20 366 KG	43,000 LB 19 504 KG	93'4" 28.45M	74'7" 22.73M	28'8" 8.24M	22'5" 6.83M	32'3" 9.83M	25'0" 7.62M	12'6" 3.81M	32'8" 9.96M	0'11" 0.28M	12'6" 3.81M	12'6" 3.81M	59'2" 18.03M

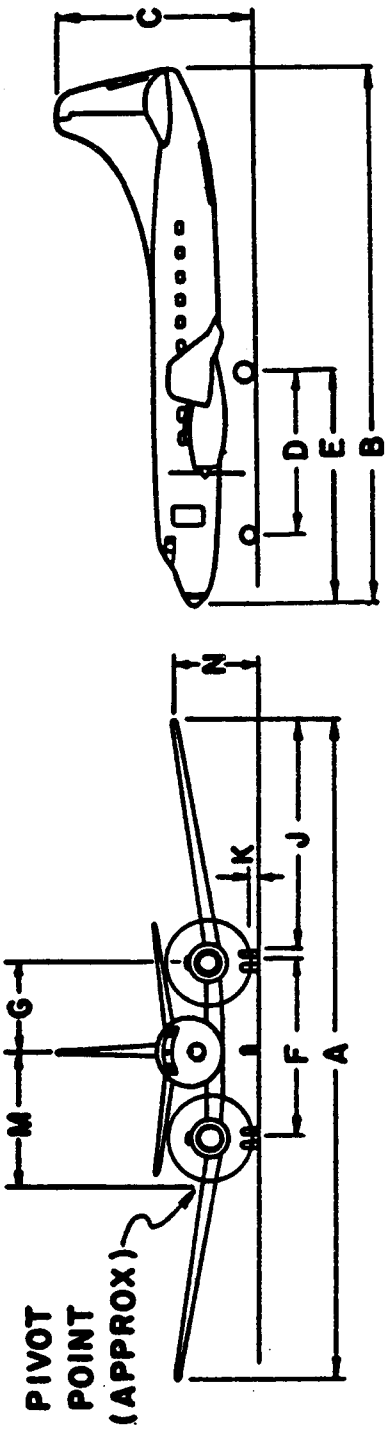

Figure A12-72. Martin 404

MODEL	MAXIMUM TAKEOFF WEIGHT	MAXIMUM LANDING WEIGHT	A	B	C	D	E	F	G	H	J	K	L	M	N	TURN RADIUS
20, 30,	315,000 LB	207,000 LB	142'5"	150'9"	43'4"	57'6"	73'5"	20'10"	25'9"	44'7"	58'10"	4'0"	5'5"	21'1"	15'3"	96'10"
40	142 884 KG	93 895 KG	43.41M	45.95M	13.21M	17.53M	22.38M	6.35M	7.85M	13.59M	17.93M	1.22M	1.63M	6.43M	4.65M	29.51M
55	325,000 LB	217,000 LB	142'5"	150'9"	43'4"	57'6"	73'5"	20'10"	25'9"	44'7"	58'10"	3'1"	4'7"	21'1"	15'3"	96'10"
	147 420 KG	98 431 KG	43.41M	45.95M	13.21M	17.53M	22.38M	6.35M	7.85M	13.59M	17.93M	0.94M	1.40M	6.43M	4.65M	29.51M
55F	325,000 LB	240,000 LB	142'5"	150'9"	43'4"	57'6"	73'5"	20'10"	25'9"	44'7"	58'10"	3'1"	4'7"	21'1"	15'3"	96'10"
	147 420 KG	108 864 KG	43.41M	45.95M	13.21M	17.53M	22.38M	6.35"	7.85M	13.59M	17.93M	0.94M	1.40M	6.43M	4.65M	29.51M
61	325,000 LB	240,000 LB	142'5"	187'5"	43'0"	77'6"	93'5"	20'10"	25'9"	44'7"	58'10"	3'3"	4'7"	27'0"	15'1"	106'11"
71	147 420 KG	108 864 KG	43.41M	57.12M	13.11M	23.62M	28.47M	6.35M	7.85M	13.59M	17.93M	0.99M	1.40M	8.23M	4.60M	32.59M
61F	328,000 LB	258,000 LB	142'5"	187'5"	43'0"	77'6"	93'5"	20'10"	25'9"	44'7"	58'10"	3'3"	4'7"	27'0"	15'1"	106'11"
71CF	148 781 KG	117 029 KG	43.41M	57.12M	13.11M	23.62M	28.47M	6.35M	7.85M	13.59M	17.93M	0.99M	1.40M	8.23M	4.60M	32.59M
62, 72,	350,000 LB	240,000 LB	148'5"	157'6"	43'5"	60'10"	76'9"	20'10"	25'9"	44'7"	61'8"	2'7"	4'2"	39'4"	15'6"	116'5"
72AF	158 760 KG	108 864 KG	45.24M	48.00M	13.23M	18.54M	23.39M	6.35M	7.85M	13.59M	18.80M	0.79M	1.27M	11.99M	4.72M	35.48M
62F	350,000 LB	250,000 LB	148'5"	157'6"	43'5"	60'10"	76'9"	20'10"	25'9"	44'7"	61'8"	2'7"	4'2"	39'4"	15'6"	116'5"
72CF	158 760 KG	113 400 KG	45.24M	48.00M	13.23M	18.54M	23.39M	6.35M	7.85M	13.59M	18.80M	0.79M	1.27M	11.99M	4.72M	35.48M
63	355,000 LB	258,000 LB	148'5"	187'5"	43'0"	77'6"	93'5"	20'10"	25'9"	44'7"	61'8"	2'7"	4'2"	38'10"	15'4"	116'1"
73	161 028 KG	117 029 KG	45.24M	57.12M	13.11M	23.62M	28.47M	6.35M	7.85M	13.59M	18.80M	0.79M	1.27M	11.84M	4.67M	35.38M
63F, 73CF	355,000 LB	275.000 LB	148'5"	187'5"	43'0"	77'6"	93'5"	20'10"	25'9"	44'7"	61'8"	2'7"	4'2"	38'10M	15'4"	116'1"
73AF	161 028 KG	124 740 KG	45.24M	57.12M	13.11M	23.62M	28.47M	6.35M	7.85M	13.59M	18.80M	0.79M	1.27M	11.84M	4.67M	35.38M

NOTE: OPTIONAL TAKEOFF AND LANDING WEIGHTS:

72 335,000 LB (151 953 KG) MAXIMUM TAKEOFF WEIGHT.
240,000 LB (108 864 KG) MAXIMUM LANDING WEIGHT.

72AF 335,000 LB (151 953 KG) MAXIMUM TAKEOFF WEIGHT.
250,000 LB (113 400 KG) MAXIMUM LANDING WEIGHT.

NOTE: REDUCE NACELLE CLEARANCE DIMENSION (K AND L) BY 10 INCHES (0.25M) FOR DC-8-70 SERIES AIRCRAFT.

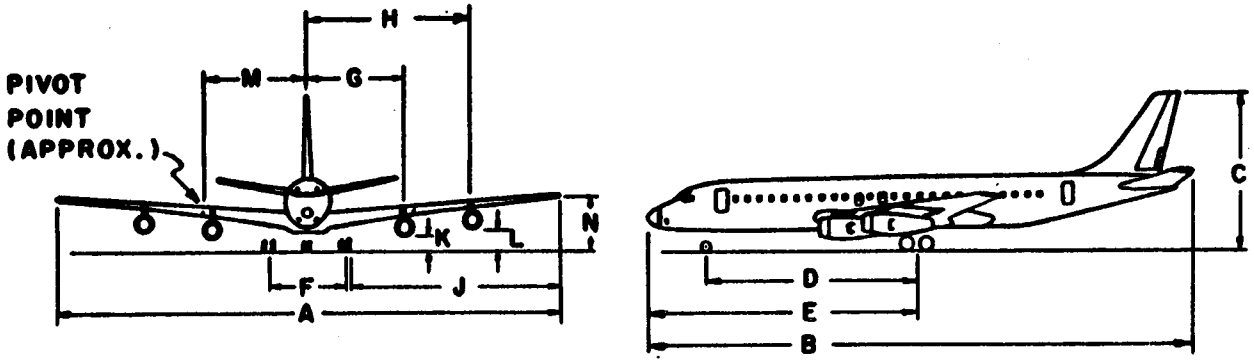

Figure A12-73. McDonnell-Douglas DC-8

MODEL	MAXIMUM TAKEOFF WEIGHT	MAXIMUM LANDING WEIGHT	A	B	C	D	E	F	G	J	K	M	N	TURN RADIUS
15	90,700 LB 41 141 KG	81,700 LB 37 058 KG	89'5" 27.25M	104'5" 31.83M	27'7" 8.41M	43'8" 13.31M	51'4" 15.64M	16'4" 4.98M	8'11" 2.72M	35'0" 10.67M	6'5" 1.96M	8'6" 2.59M	7'2" 2.18M	59'7" 18.16M
15F	90,700 LB 41 141 KG	81,700 LB 37 058 KG	89'5" 27.25M	104'5" 31.83M	27'7" 8.41M	43'8" 13.31M	51'4" 15.64M	16'4" 4.98M	8'11" 2.72M	35'0" 10.67M	6'5" 1.96M	8'6" 2.59M	7'2" 2.18M	59'7" 18.16M
21	98,000 LB 44 452 KG	95,300 LB 43 227 KG	93'4" 28.45M	104'5" 31.83M	27'5" 8.36M	43'8" 13.31M	51'4" 15.64M	16'4" 4.98M	8'11" 2.72M	36'10" 11.23M	6'5" 1.96M	8'6" 2.59M	7'3" 2.21M	59'6" 18.14M
32	110,000 LB 49 895 KG	99,000 LB 44 906 KG	93'4" 28.45M	119'4" 36.37M	27'9" 8.46M	53'2" 16.21M	60'9" 18.52M	16'4" 4.98M	8'11" 2.72M	36'10" 11.23M	6'5" 1.96M	10'4" 3.15M	7'3" 2.21M	65'2" 19.86M
33F	110,000 LB 49 895 KG	99,000 LB 44 906 KG	93'4" 28.45M	119'4" 36.37M	27'9" 8.46M	53'2" 16.21M	60'9" 18.52M	16'4" 4.98M	8'11" 2.72M	36'10" 11.23M	6'5" 1.96M	10'4" 3.15M	7'3" 2.21M	65'2" 19.86M
41	114,000 LB 51 710 KG	102,000 LB 46 266 KG	93'4" 28.45M	125'7" 38.28M	28'5" 8.66M	56'2" 17.12M	63'8" 19.41M	16'0" 4.88M	8'11" 2.72M	37'0" 11.28M	6'11" 2.11M	10'11" 3.33M	7'2" 2.18M	68'6" 20.88M
51	121,000 LB 54 885 KG	110,000 LB 49 895 KG	93'4" 28.45M	133'7" 40.72M	28'9" 8.76M	60'11" 18.57M	68'6" 20.88M	16'0" 4.88M	8'11" 2.72M	37'0" 11.28M	6'10" 2.08M	11'10" 3.61M	7'1" 2.16M	71'10" 21.89M
81,82, 83,88	SEE NOTE	SEE NOTE	107'10" 32.87M	147'10" 45.06M	30'3" 9.22M	72'5" 22.07M	80'0" 24.38M	16'8" 5.08M	8'11" 2.72M	43'9" 13.34M	7'6" 2.29M	14'0" 4.27M	8'7" 2.62M	81'2" 24.74M
87	SEE NOTE	SEE NOTE	107'10" 32.87M	130'5" 39.75M	31'2" 9.50M	62'11" 19.18M	70'6" 21.49M	16'8" 5.08M	8'11" 2.72M	43'9" 13.34M	7'6" 2.29M	12'2" 3.71M	8'8" 2.64M	71'7" 21.82M

NOTE: TAKEOFF AND LANDING WEIGHTS:

81 140,000 LB (63 503 KG) MAXIMUM TAKEOFF WEIGHT.
128,000 LB (58 060 KG) MAXIMUM LANDING WEIGHT.

82 149,500 LB (67 812 KG) MAXIMUM TAKEOFF WEIGHT.
130,000 LB (58 967 KG) MAXIMUM LANDING WEIGHT.

83 160,000 LB (72 575 KG) MAXIMUM TAKEOFF WEIGHT.
139,500 LB (63 276 KG) MAXIMUM LANDING WEIGHT.

88 149,500 LB (67 812 KG) MAXIMUM TAKEOFF WEIGHT.
130,000 LB (58 967 KG) MAXIMUM LANDING WEIGHT.

87 149,500 LB (67 812 KG) MAXIMUM TAKEOFF WEIGHT.
130,000 LB (58 967 KG) MAXIMUM LANDING WEIGHT.

87 140,000 LB (63 503 KG) MAXIMUM TAKEOFF WEIGHT.
128,000 LB (56 060 KG) MAXIMUM LANDING WEIGHT.

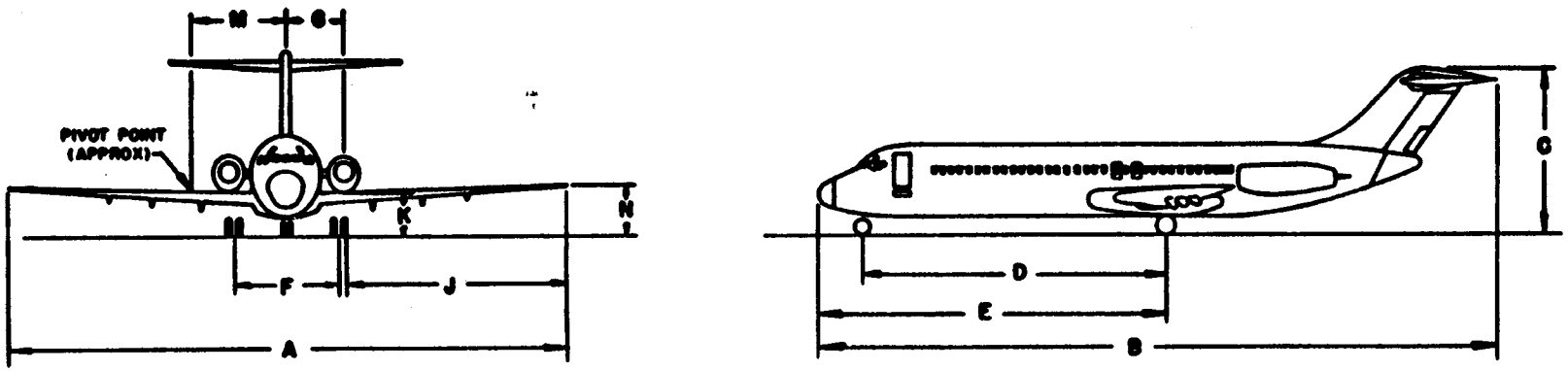

Figure A12-74. McDonnell-Douglas DC-9 and MD-80

MODEL	MAXIMUM TAKEOFF WEIGHT	MAXIMUM LANDING WEIGHT	A	B	C	D	E	F	G	J	K	M	N	P	TURN RADIUS
10	443,000 LB	363,500 LB	155'4"	182'3"	58'5"	72'5"	100'4"	35'0"	26'10"	57'1"	2'9"	39'0"	14'5"	29'7"	121'8"
	200 941 KG	164 881 KG	47.35M	55.55M	17.81M	22.07M	30.58M	10.67M	8.18M	17.40M	0.84M	11.89M	4.32M	9.02M	37.08M
30	590,000 LB	411,000 LB	165'4"	181'7"	58'7"	72'5"	100'4"	35'0"	26'10"	62'1"	2'10"	37'2"	14'4"	29'6"	125'4"
	267 620 KG	186 426 KG	50.39M	55.35M	17.86M	22.07M	30.58M	10.67M	8.18M	18.92M	0.86M	11.33M	4.37M	8.99M	38.20M
40	555,000 LB	403,000 LB	165'4"	182'3"	58'7"	72'5"	100'4"	35'0"	26'10"	62'1"	2'10"	37'2"	14'4"	29'6"	125'4"
	251 744 KG	182 798 KG	50.39M	55.55M	17.86M	22.07M	30.58M	10.67M	8.18M	18.92M	0.86M	11.33M	4.37M	8.99M	38.20M
KC-10A	590,000 LB	436,000 LB	165'4"	181'7"	58'7"	72'5"	100'4"	35'0"	26'10"	62'1"	2'10"	37'2"	14'4"	29'6"	125'4"
	267 620 KG	197 766 KG	50.39M	55.35M	17.86M	22.07M	30.58M	10.67M	8.18M	18.92M	0.86M	11.33M	4.37M	8.99M	38.20M

NOTE: TAKEOFF AND LANDING WEIGHTS:

10CF 440,000 LB (199 581 KG) MAXIMUM TAKEOFF WEIGHT.
363,500 LB (164 881 KG) MAXIMUM LANDING WEIGHT.

15 455,000 LB (206 384 KG) MAXIMUM TAKEOFF WEIGHT.
363,500 LB (164 881 KG) MAXIMUM LANDING WEIGHT.

30CF 580,000 LB (263 084 KG) MAXIMUM TAKEOFF WEIGHT.
436,000 LB (197 766 KG) MAXIMUM LANDING WEIGHT.

40CF 555,000 LB (251 744 KG) MAXIMUM TAKEOFF WEIGHT.
411,000 LB (186 426 KG) MAXIMUM LANDING WEIGHT.

DC-10-10CF HAS SAME DIMENSIONS AS MODEL 10.
DC-10-15 HAS SAME DIMENSIONS AS MODEL 10.
DC-10-30CF HAS SAME DIMENSIONS AS MODEL 30.

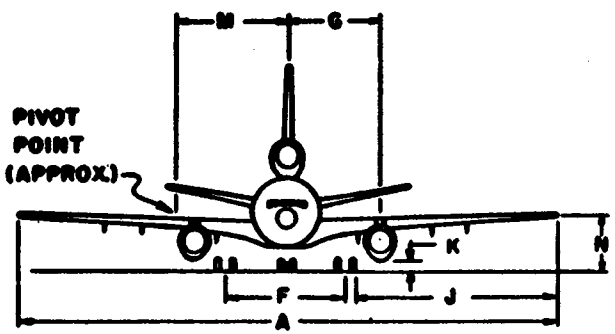

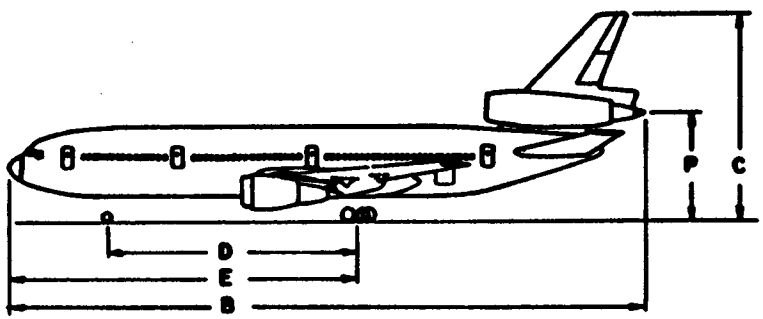

Figure A12-75. McDonnell-Douglas DC-10

	MAXIMUM TAKEOFF WEIGHT	MAXIMUM LANDING WEIGHT	A	B	C	D	E	F	G	J	K	M	N	P	TURN RADIUS
11	602,500 LB 273 289 KG	430,000 LB 195 045 KG	169'10" 51.77M	SEE NOTE	57'9" 17.60M	80'9" 24.61M	108'9" 33.15M	35'0" 10.67M	26'10" 8.18M	64'4" 19.61M	3'1" 0.94M	29'7" 9.02M	SEE NOTE	29'2" 8.89M	135'8" 41.35M
11 COMBI	602,500 LB 273 289 KG	458,000 LB 207 745 KG	169'10" 51.77M	SEE NOTE	57'9" 17.60M	80'9" 24.61M	108'9" 33.15M	35'0" 10.67M	26'10" 8.18M	64'4" 19.61M	3'1" 0.94M	29'7" 9.02M	SEE NOTE	29'2" 8.89M	135'8" 41.35M
11F	602,500 LB 273 289 KG	471,500 LB 213 869 KG	169'10" 51.77M	SEE NOTE	57'9" 17.60M	80'9" 24.61M	108'9" 33.15M	35'0" 10.67M	26'10" 8.18M	64'4" 19.61M	3'1" 0.94M	29'7" 9.02M	SEE NOTE	29'2" 8.89M	135'8" 41.35M

NOTE: OPTIONAL MAXIMUM TAKEOFF WEIGHT: 605,500 LB (274 650 KG).

"B" 201' 4" (61.37M) WITH CF6-80C2D1F ENGINES.
"B" 200'11" (61.24M) WITH PW 4360 ENGINES.

"N" TOP OF WINGLET 23'5" (7.14M).
"N" BOTTOM OF WINGLET 13'9" (4.19M).

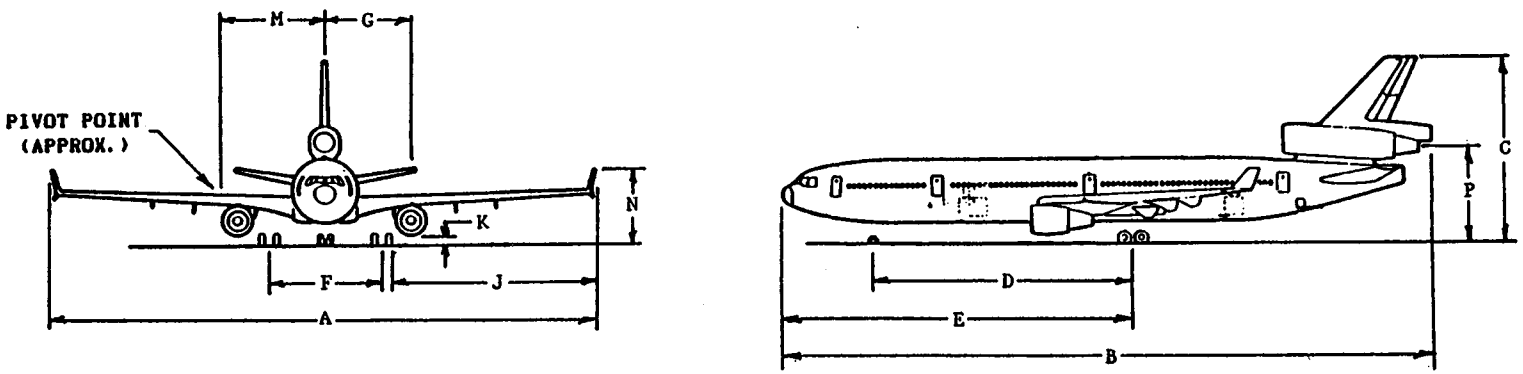

Figure A12-76. McDonnell-Douglas MD-11

MODEL	MAXIMUM TAKEOFF WEIGHT	MAXIMUM LANDING WEIGHT	A	B	C	D	F	NUMBER SEATS	TURN RADIUS
MU-2N MARQUISE	11,575 LB 5 250 KG	10,260 LB 4 654 KG	39'2" 11.94M	39'6" 12.04M	13'8" 4.17M	14'5" 4.39M	7'11" 2.41M	7	
MU-2P SOLITAIRE	10,470 LB 4 749 KG		39'2" 11.94M	33'3" 10.13M	12'11" 3.94M			9	

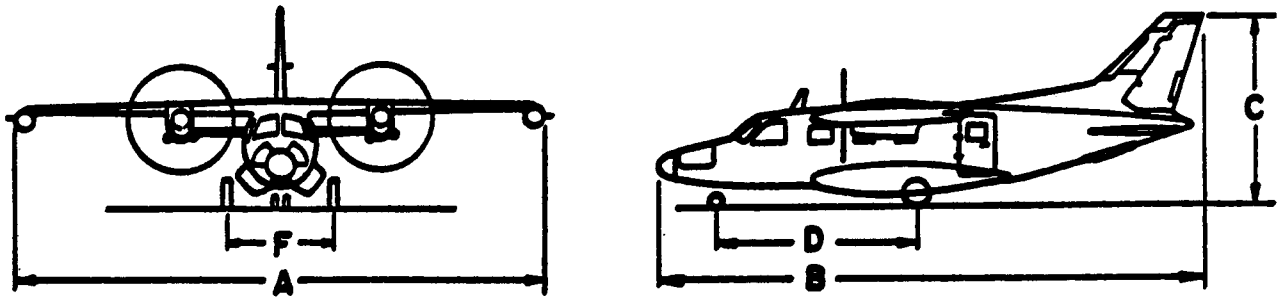

Figure A12-77. Mitsubishi MU-2

MODEL	MAXIMUM TAKEOFF WEIGHT	MAXIMUM LANDING WEIGHT	A	B	C	D	E	F	G	J	K	M	N	TURN RADIUS
YS-11A	54,010 LB 24 499KG	52,910 LB 24 000 KG	105'0" 32.00M	86'4" 26.31M	29'6" 8.99M	31'3" 9.53M		28'3" 8.61M		37'8" 11.38M				

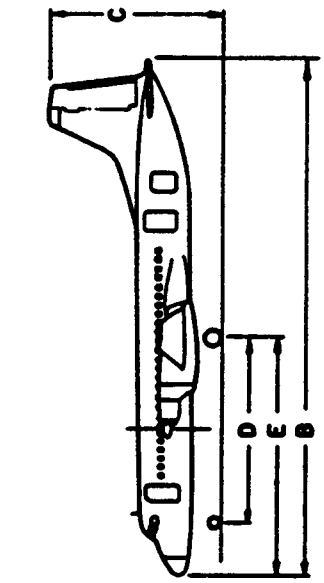

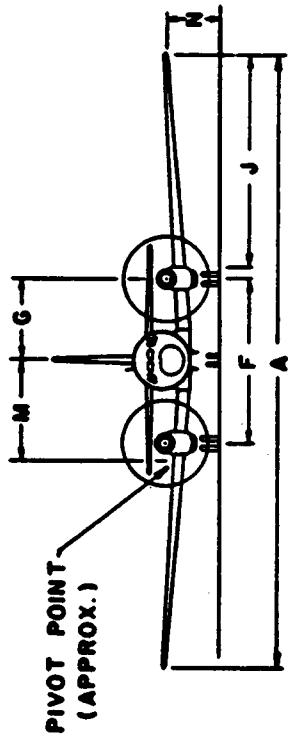

Figure A12-78. Nihon/N.A.M.C. YS-11A

MODEL	MAXIMUM TAKEOFF WEIGHT	MAXIMUM LANDING WEIGHT	A	B	C	D	E	F	G	J	K	M	N	TURN RADIUS
40	18,650 LB 8 459 KG	17,500 LB 7 938 KG	44'6" 13.56M	43'9' 13.34M	16'0" 4.88M	14'6" 4.42M	22'9" 6.93M	7'3" 2.21M	4'6" 1.37M	18'4" 5.59M	3'10" 1.16M	17'8" 5.38M	3'8" 1.12M	43'6" 13.26M
60	20,000 LB 9 072 KG	17,500 LB 7 938 KG	44'6" 13.56M	48'4" 14.73M	16'0" 4.88M	15'11" 4.85M	24'1" 7.34M	7'3" 2.21M	4'6" 1.37M	18'4" 5.59M	3'10" 1.16M		3'8" 1.12M	
70,75A	21,000 LB 9 525 KG	18,500 LB 8 391 KG	44'6" 13.56M	47'2" 14.40M	17'3" 5.24M	15'10" 4.81M		8'4" 2.54M	4'6" 1.37M		3'6" 1.05M		3'7" 1.08M	

NOTE: MODEL 75A HAS MAXIMUM (TAKEOFF) WEIGHT OF 23,300 LB (10 569 KG).
(LANDING) 22,000 LB (9 979 KG).

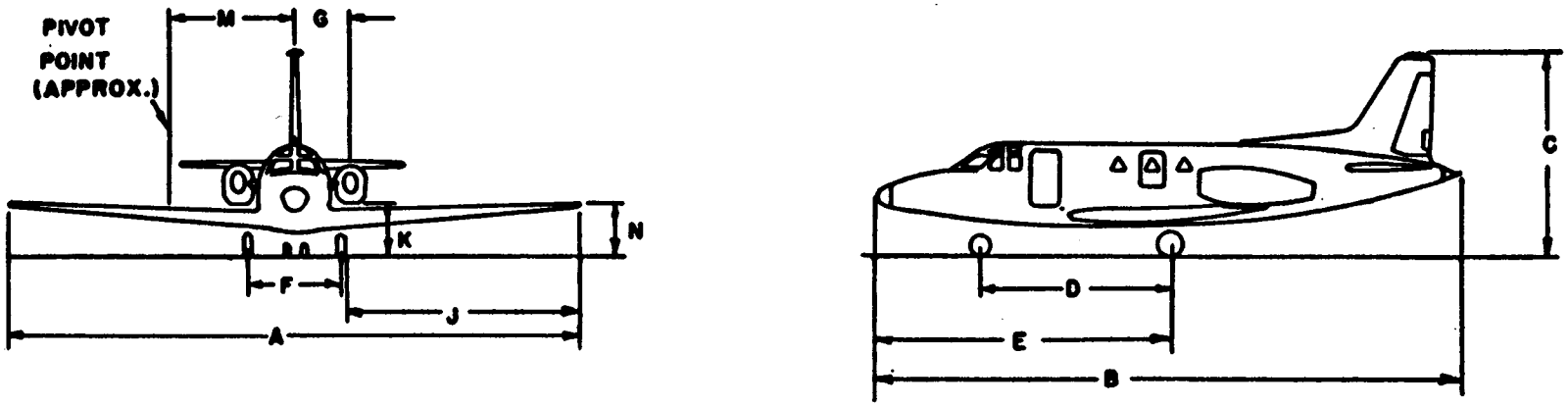

Figure A12-79. Rockwell International NA-265 Sabreliner

MODEL	MAXIMUM TAKEOFF WEIGHT	MAXIMUM LANDING WEIGHT	A	B	C	D	E	F	G	J	K	H	N	TURN RADIUS
SF 340	27,275 LB 12 372 KG	26,500 LB 12 020 KG	70'4" 21.44M	64'8" 19.71M	22'6" 6.86M	23'5" 7.14M	30'0" 9.14M	22'0" 6.71M	10'10" 3.30M	23'3" 7.09M	1'11" 0.58M	18'8" 5.69M	8'4" 2.54M	

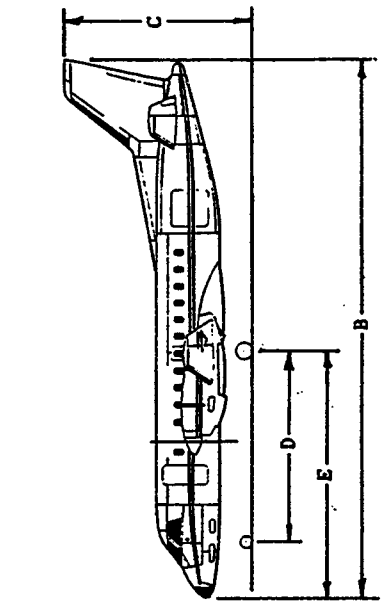

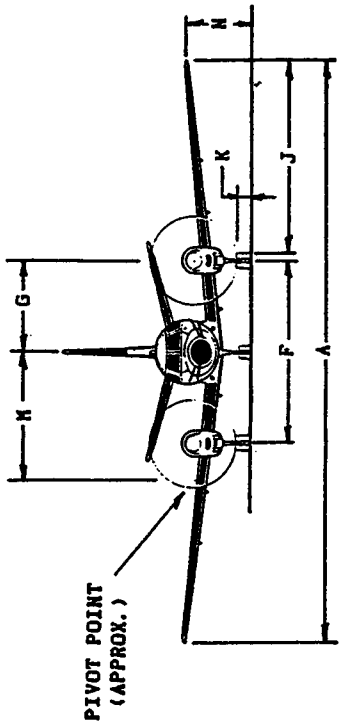

Figure A12-80. SAAB SF 340

MODEL	MAXIMUM TAKEOFF WEIGHT	MAXIMUM LANDING WEIGHT	A	B	C	D	F	NUMBER SEATS	TURN RADIUS
SC.7	12,500 LB 5 688 KG	12,500 LB 5,688 KG	64'11" 19.79M	40'1" 12.22M	15'0" 4.57M	14'10" 4.52M	13'10" 4.22M	21	
SC.7 -3M	13,700 LB 6 214 KG	13,500 LB 6 123 KG	64'11" 19.79M	40'1" 12.22M	15'0" 4.57M	14'10" 4.52M	13'10" 4.22M	22	
SC.7 -3M	14,500 LB 6 577 KG	13,500 LB 6 123 KG	64'11" 19.79M	40'1" 12.22M	15'0" 4.57M	14'10" 4.52M	13'10" 4.22M	22	
330	22,600 LB 10 251 KG	22,300 LB 10 115 KG	74'8" 22.76M	58'0" 17.68M	16'3" 4.95M	20'2" 6.15M	13'11" 4.24M	30	53'10" 16.41M
330 -200	22,900 LB 10 387 KG	22,600 LB 10 251 KG	74'8" 22.76M	58'0" 17.68M	16'3" 4.95M	20'2" 6.15M	13'11" 4.24M	30	53'10" 16.41M
360	26,453 LB 11 999 KG	26,100 LB 11 839 KG	74'10" 22.81M	70'10" 21.59M	23'8" 7.21M	23'2" 7.06M	13'11" 4.24M	36	53'10" 16.41M

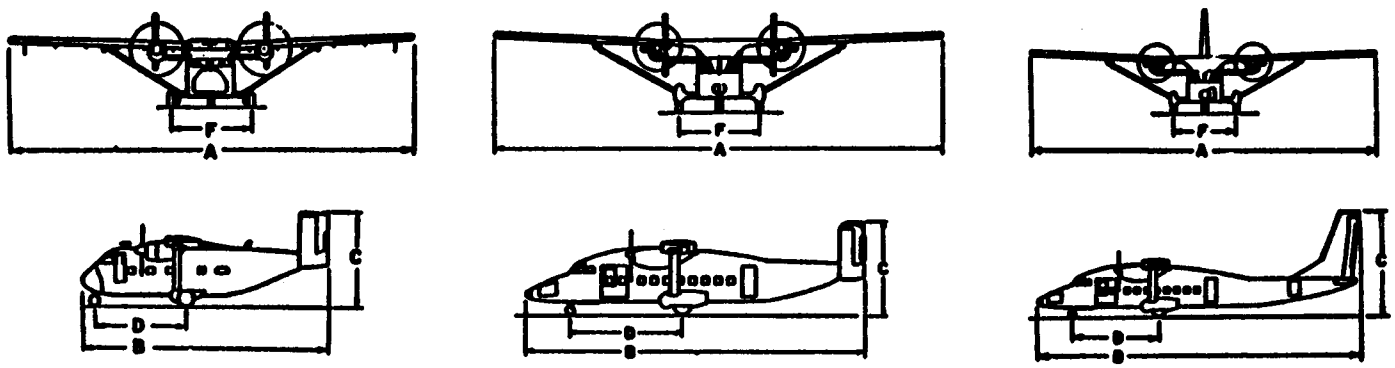

SC.7-3M 330 360

Figure A12-81. Short Brothers

MODEL	MAXIMUM TAKEOFF WEIGHT	MAXIMUM LANDING WEIGHT	A	B	C	D	E	F	G	H	J	K	L	M	N	TURN RADIUS
BELFAST	230,000 LB 104 326 KG	215,000 LB 97 522 KG	158'10" 48.41M	136'5" 41.58M	47'0" 14.33M	48'11" 14.66M		19'4" 5.89M								

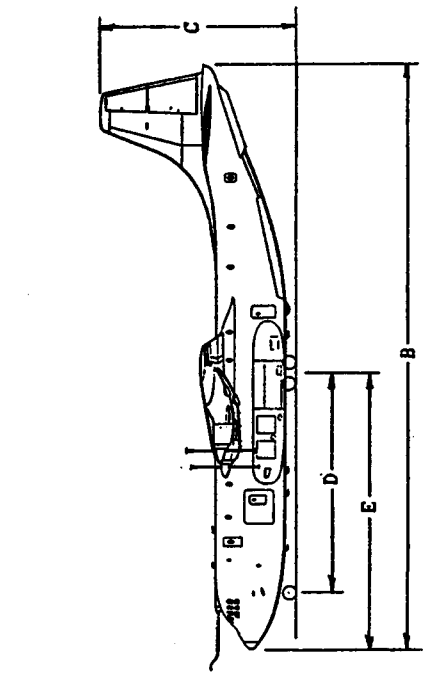

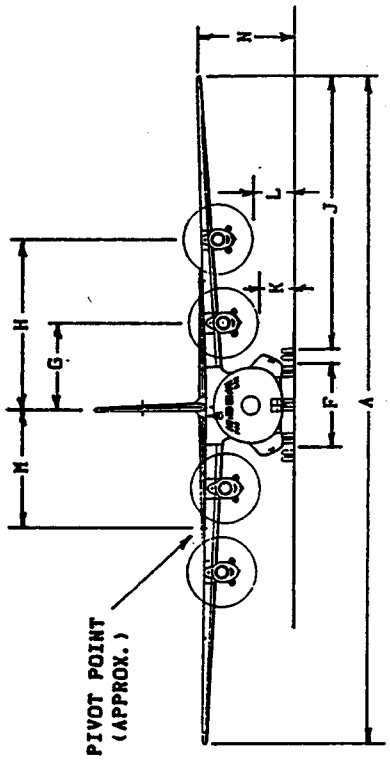

Figure A12-82. Shorts SC. 5/10 Belfast

MODEL	MAXIMUM TAKEOFF WEIGHT	MAXIMUM LANDING WEIGHT	A	B	C	D	F	NUMBER SEATS	TURN RADIUS
IIB	10,000 LB 4 536 KG	9,300 LB 4 218 KG	45'11" 14.00M	40'1" 12.22M	14'4" 4.36M		15'0" 4.57M	8	
III	12,500 LB 5 670 KG	11,500 LB 5 216 KG	46'3" 14.10M	42'2" 12.85M	16'8" 5.08M		15'0" 4.57M	8	
IV	12,500 LB 5 670 KG	11,500 LB 5 216 KG	46'3" 14.10M	59'5" 18.11M	16'8" 5.08M	19'2" 5.84M	15'0" 4.57M	12	
IVC	14,500 LB 6 577 KG	14,000 LB 6 350 KG	57'0" 17.37M	59'5" 18.11M	16'8" 5.08M			12	

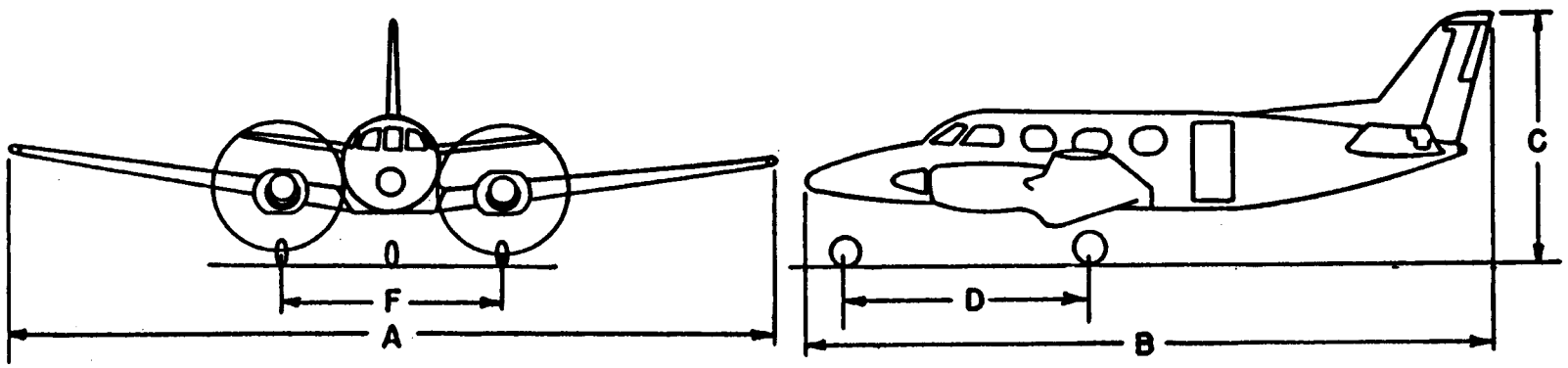

Figure A12-83. Swearingen Merlin

MODEL	MAXIMUM TAKEOFF WEIGHT	MAXIMUM LANDING WEIGHT	A	B	C	D	F	NUMBER SEATS	TURN RADIUS
II	12,500 LB 5 670 KG	12,500 LB 5 670 KG	46'3" 14.10M	59'5" 18.11M	16'8" 5.08M	19'2" 5.84M	15'0" 4.57M	22	
IIA	13,230 LB 6 001 KG	13,000 LB 5 897 KG	46'3" 14.10M	59'5" 18.11M	16'8" 5.08M				
III	14,500 LB 6 577 KG	14,000 LB 6 350 KG	57'0" 17.37M	59'5" 18.11M	16'8" 5.08M				
IIIH	16,000 LB 7 257 KG	15,500 LB 7 031 KG	57'0" 17.37M	59'5" 18.11M	16'8" 5.08M				
V	16,500 LB 7 484 KG	15,675 LB 7 110 KG							

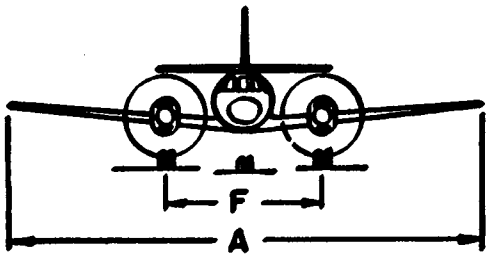

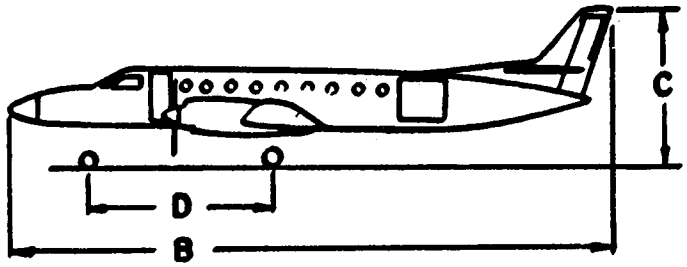

Figure A12-84. Swearingen Metro

Appendix 13. AIRPLANES ARRANGED BY AIRPLANE MANUFACTURER, AND AIRPORT REFERENCE CODE

Section 1. Alphabetical Listing (U.S. customary units)

Aircraft	Airport Reference Code	Appch Speed Knots	Wingspan Feet	Length Feet	Tail Height Feet	Maximum Takeoff Lbs
Aeritalia G-222	B-III	109	93.8	74.4	32.0	61,700
Aerocom Skyliner	A-II	88	54.0	54.3	16.5	12,500
Aerospatiale C 160 Trans.	C-IV	124	131.3	106.3	38.7	108,596
Aerospatiale NORD-262	B-II	96	71.9	63.3	20.4	23,480
Aerospatiale SE 210 Carav.	C-III	127	112.5	105.0	28.6	114,640
Aerospatiale SN 601 Corv.	B-I	118	42.2	45.4	13.9	14,550
Ahrens AR 404	B-II	98	66.0	52.7	19.0	18,500
AIDC/CAF XC-2	A-III	86	81.7	65.9	25.3	27,500
Airbus A-300-600	C-IV	135	147.1	177.5	54.7	363,763
Airbus A-300-B4	C-IV	132	147.1	175.5	55.5	330,700
Airbus A-310-300	C-IV	125	144.1	153.2	52.3	330,693
Airbus A-320-100	C-III	138	111.3	123.3	39.1	145,505
Air-Metal AM-C 111	B-II	96	63.0	55.2	21.0	18,629
AJI Hustler 400	B-I	98	28.0	34.8	9.8	6,000
Antonov AN-10	C-IV	126	124.8	121.4	32.2	121,500
Antonov AN-12	C-IV	127	124.8	109.0	34.6	121,500
Antonov AN-124	C-VI	124	232.0	223.0	66.2	800,000
Antonov AN-14	A-II	52	72.1	37.2	15.2	7,607
Antonov AN-22	C-V	140 *	211.0	167.0	41.2	500,000
Antonov AN-24	B-III	119	95.8	77.2	27.3	46,305
Antonov AN-26	C-III	121	95.8	78.1	28.1	52,920
Antonov AN-28	A-II	88	72.1	42.6	16.1	12,350
Antonov AN-30	B-III	112	96.4	80.1	27.3	51,040
Antonov AN-72	A-III	89 *	84.7	84.7	27.0	66,000
AW.650 Argosy 220	C-III	123	115.0	86.8	27.0	93,000
AW.660 Argosy C.Mk.1	B-III	113	115.0	89.1	27.0	97,000
BAC 111-200	C-III	129	88.5	93.5	24.5	79,000
BAC 111-300	C-III	128	88.5	93.5	24.5	88,500
BAC 111-400	C-III	137	88.5	93.5	24.5	87,000
BAC 111-475	C-III	135	93.5	93.5	24.5	98,500
BAC 111-500	D-III	144	93.5	107.0	24.5	104,500
BAC/Aerospatiale Concord	D-III	162	83.8	205.4	37.4	408,000
BAe 146-100	B-III	113	86.4	85.8	28.3	74,600
BAe 146-200	B-III	117	86.4	93.7	28.3	88,250
BAe 146-300	C-III	121	86.4	104.2	28.1	104,000
BAe Jetstream 31	B-II	99	52.0	47.2	17.5	14,550
Beech Airliner 1900-C	B-II	120 *	54.5	57.8	14.9	16,600
Beech Airliner C99	B-I	107	45.9	44.6	14.4	11,300
Beech Baron 58	B-I	96	37.8	29.8	9.8	5,500
Beech Baron 58P	B-I	101	37.8	29.8	9.1	6,200
Beech Baron 58TC	B-I	101	37.8	29.8	9.1	6,200
Beech Baron B55	A-I	90	37.8	28.0	9.1	5,100
Beech Baron E55	A-I	88	37.8	29.0	9.1	5,300
Beech Bonanza A36	A-I	72	33.5	27.5	8.6	3,650

Aircraft	Airport Reference Code	Appch Speed Knots	Wingspan Feet	Length Feet	Tail Height Feet	Maximum Takeoff Lbs
Beech Bonanza B36TC	A-I	75	37.8	27.5	8.6	3,850
Beech Bonanza F33A	A-I	70	33.5	26.7	8.2	3,400
Beech Bonanza V35B	A-I	70	33.5	26.4	6.6	3,400
Beech Duchess 76	A-I	76	38.0	29.0	9.5	3,900
Beech Duke B60	B-I	98	39.2	33.8	12.3	6,775
Beech E18S	A-II	87	49.7	35.2	9.5	9,300
Beech King Air B100	B-I	111	45.8	39.9	15.3	11,800
Beech King Air C90-1	B-II	100	50.2	35.5	14.2	9,650
Beech King Air F90	B-I	108	45.9	39.8	15.1	10,950
Beech Sierra 200-B24R	A-I	70	32.8	25.7	8.2	2,750
Beech Skipper 77	A-I	63	30.0	24.0	6.9	1,675
Beech Sundowner 180-C23	A-I	68	32.8	25.7	8.2	2,450
Beech Super King Air B200	B-II	103	54.5	43.8	15.0	12,500
BN-2A Mk.3 Trislander	A-II	65	53.0	45.7	14.2	10,000
Boeing 707-100	C-IV	139	130.8	145.1	41.7	257,340
Boeing 707-200	D-IV	145	130.8	145.1	41.7	257,340
Boeing 707-320	C-IV	139	142.4	152.9	42.2	312,000
Boeing 707-320B	C-IV	136	145.8	152.9	42.1	336,600
Boeing 707-420	C-IV	132	142.4	152.9	42.2	312,000
Boeing 720	C-IV	133	130.8	136.2	41.4	229,300
Boeing 720B	C-IV	137	130.8	136.8	41.2	234,300
Boeing 727-100	C-III	125	108.0	133.2	34.3	169,000
Boeing 727-200	C-III	138	108.0	153.2	34.9	209,500
Boeing 737-100	C-III	137	93.0	94.0	37.2	110,000
Boeing 737-200	C-III	137	93.0	100.2	37.3	115,500
Boeing 737-300	C-III	137	94.8	109.6	36.6	135,000
Boeing 737-400	C-III	139	94.8	119.6	36.6	150,000
Boeing 737-500	C-III	140 *	94.8	101.8	36.6	133,500
Boeing 747-100	D-V	152	195.7	231.8	64.3	600,000
Boeing 747-200	D-V	152	195.7	231.8	64.7	833,000
Boeing 747-300SR	D-V	141	195.7	231.8	64.3	600,000
Boeing 747-400	D-V	154	213.0	231.8	64.3	870,000
Boeing 747-SP	C-V	140	195.7	184.8	65.8	696,000
Boeing 757	C-IV	135	124.8	155.3	45.1	255,000
Boeing 767-200	C-IV	130	156.1	159.2	52.9	315,000
Boeing 767-300	C-IV	130	156.1	180.3	52.6	350,000
Boeing 777	D-IV	145	155.0	181.5	44.8	380,000
Boeing B-52	D-V	141 *	185.0	157.6	40.8	488,000
Boeing C97 Stratocruiser	B-IV	105	141.3	110.3	38.3	145,800
Boeing E-3	C-IV	137	145.9	153.0	42.0	325,000
Boeing E-4 (747-200)	D-V	152	195.7	231.8	64.7	833,000
Boeing YC-14	A-IV	89	129.0	131.7	48.3	216,000
Bristol Brittania 300/310	B-IV	117	142.3	124.2	37.5	185,000
Canadair CL-44	C-IV	123	142.3	136.8	38.4	210,000
Canadair CL-600	C-II	125	61.8	68.4	20.7	41,250
Casa C-207A Azor	B-III	102	91.2	68.4	25.4	36,400
Casa C-212-200 Aviocar	A-II	81	62.3	49.8	20.7	16,976
Cessna Citation I	B-I	108	47.1	43.5	14.3	11,850
Cessna Citation II	B-II	108	51.7	47.2	15.0	13,300
Cessna Citation III	B-II	114	53.5	55.5	16.8	22,000
Cessna-150	A-I	55	32.7	23.8	8.0	1,600

Aircraft	Airport Reference Code	Appch Speed Knots	Wingspan Feet	Length Feet	Tail Height Feet	Maximum Takeoff Lbs
Cessna-177 Cardinal	A-I	64	35.5	27.2	8.5	2,500
Cessna-402 Businessliner	B-I	95	39.8	36.1	11.6	6,300
Cessna-404 Titan	B-I	92	46.3	39.5	13.2	8,400
Cessna-414 Chancellor	B-I	94	44.1	36.4	11.5	6,785
Cessna-421 Golden Eagle	B-I	96	41.7	36.1	11.6	7,450
Cessna-441 Conquest	B-II	100	49.3	39.0	13.1	9,925
Convair 240	B-III	107	91.8	74.7	26.9	41,790
Convair 340	B-III	104	105.3	81.5	28.2	49,100
Convair 440	B-III	106	105.3	81.5	28.2	49,100
Convair 580	B-III	107	105.3	81.5	29.2	54,600
Dassault 1150 Atlantic	C-IV	130 *	122.7	104.2	37.2	100,000
Dassault 941	A-II	59	76.7	77.9	30.7	58,400
Dassault FAL-10	B-I	104	42.9	45.5	15.1	18,740
Dassault FAL-20	B-II	107	53.5	56.3	17.4	28,660
Dassault FAL-200	B-II	114	53.5	56.3	17.4	30,650
Dassault FAL-50	B-II	113	61.9	60.8	22.9	37,480
Dassault FAL-900	B-II	100	63.4	66.3	24.8	45,500
Dassault Mercure	B-III	117	100.2	114.3	37.3	124,500
DHC-2 Beaver	A-I	50	48.0	30.3	9.0	5,100
DHC-4 Caribou	A-III	77	95.6	72.6	31.8	28,500
DHC-5D Buffalo	B-III	91	96.0	79.0	28.7	49,200
DHC-6-300 Twin Otter	A-II	75	65.0	51.7	19.5	12,500
DHC-7 Dash 7-100	A-III	83	93.0	80.7	26.2	43,000
DHC-8 Dash 8-300	A-III	90	90.0	84.3	24.6	41,100
DH.104 Dove 8	A-II	84	57.0	39.2	13.3	8,950
DH.106 Comet 4C	B-III	108	115.0	118.0	29.5	162,000
DH.114 Heron 2	A-II	85	71.5	48.5	15.6	13,500
Dornier DO 28D-2	A-II	74	51.0	37.4	12.8	8,855
Dornier LTA	A-II	74 *	58.4	54.4	18.2	15,100
Embraer-110 Bandeirante	B-II	92	50.3	49.5	16.5	13,007
Embraer-121 Xingu	B-I	92	47.4	40.2	15.9	12,500
Embraer-326 Xavante	B-I	102	35.6	34.9	12.2	11,500
Embraer-820 Navajo Chief	A-I	74	40.7	34.6	13.0	7,000
Fairchild C-119	C-III	122	109.3	86.5	27.5	77,000
Fairchild C-121	A-III	88	110.0	75.8	34.1	60,000
Fairchild FH-227 B,D	B-III	105	95.2	83.1	27.5	45,500
Fairchild F-27 A,J	B-III	109	95.2	77.2	27.5	42,000
FMA IA-50 Guarni II	B-II	101	64.1	48.8	19.1	15,700
Fokker F-27-500	B-III	102	95.2	82.3	29.3	45,000
Fokker F-28-1000	B-II	119	77.3	89.9	27.8	65,000
Fokker F-28-2000	B-II	119	77.3	97.2	27.8	65,000
Fokker F-28-3000	C-III	121	82.3	89.9	27.8	73,000
Fokker F-28-4000	C-III	121	82.3	97.2	27.8	73,000
Fokker F-28-6000	B-III	113	82.3	97.2	27.8	73,000
Foxjet ST-600-8	B-I	97	31.6	31.8	10.2	4,550
GAC-100	A-II	86	70.0	67.3	24.9	28,900
Gates Learjet 24	C-I	128	35.6	43.3	12.6	13,000
Gates Learjet 25	C-I	137	35.6	47.6	12.6	15,000
Gates Learjet 28/29	B-I	120	43.7	47.6	12.3	15,000
Gates Learjet 35A/36A	D-I	143	39.5	48.7	12.3	18,300
Gates Learjet 54-55-56	C-I	128	43.7	55.1	14.7	21,500

Aircraft	Airport Reference Code	Appch Speed Knots	Wingspan Feet	Length Feet	Tail Height Feet	Maximum Takeoff Lbs
General Dynamics 880	D-IV	155	120.0	129.3	36.0	193,500
General Dynamics 990	D-IV	156	120.0	139.2	39.5	255,000
Grumman Gulfstream I	B-II	113	78.3	75.3	23.0	36,000
Grumman Gulfstream II	D-II	141	68.8	79.9	24.5	65,300
Grumman Gulfstream III	C-II	136	77.8	83.1	24.4	68,700
Grumman Gulfstream II-TT	D-II	142	71.7	79.9	24.5	65,300
Grumman Gulfstream IV	D-II	145	77.8	87.8	24.4	71,780
Hamilton Westwind II STD	B-I	96	46.0	45.0	9.2	12,495
HFB-320 Hansa	C-I	125	47.5	54.5	16.2	20,280
Hindustan HS.748-2	B-III	94	98.4	67.0	24.8	44,402
HP Herald	A-III	88	94.8	75.5	24.1	43,000
HS 125 Series 400A	C-I	124	47.0	47.4	16.5	23,300
HS 125 Series 600A	C-I	125	47.0	50.5	17.2	25,000
HS 125 Series 700A	C-I	125	47.0	50.7	17.6	24,200
HS.121 Trident 1E	C-III	137	95.0	114.8	27.0	135,500
HS.121 Trident 2E	C-III	138	98.0	114.8	27.0	144,000
HS.121 Trident 3B	D-III	143	98.0	131.2	28.3	150,000
HS.121 Trident Super 3B	D-III	146	98.0	131.2	28.3	158,000
HS.748 Series 2A	B-III	94	98.5	67.0	24.8	44,490
HS.780 Andover C.Mk.1	B-III	100	98.2	78.0	30.1	50,000
HS.801 Nimrod MR Mk.2	C-III	125 *	114.8	126.8	29.7	177,500
IAI 1121 Jet Comdr.	C-I	130	43.3	50.4	15.8	16,800
IAI Arava-201	A-II	81	68.6	42.7	17.1	15,000
IAI-1124 Westwind	C-I	129	44.8	52.3	15.8	23,500
Ilyushin Il-12	A-III	78	104.0	70.0	30.5	38,000
Ilyushin Il-18	B-IV	103	122.7	117.8	33.3	134,640
Ilyushin Il-62	D-IV	152	141.8	174.3	40.5	363,760
Ilyushin Il-76	B-IV	119	165.7	152.8	48.4	374,785
Ilyushin Il-86	D-IV	141	157.7	195.3	51.8	454,150
Kawasaki C-1	B-III	118 *	100.4	95.1	32.9	85,320
Lapan XT-400	A-I	75	47.9	33.5	14.1	5,555
Learfan 2100	A-I	86	39.3	40.6	12.2	7,400
LET L-410 UVP-E	A-II	81	65.5	47.5	19.1	14,109
Lockheed 100-20 Hercules	C-IV	137	132.6	106.1	39.3	155,000
Lockheed 100-30 Hercules	C-IV	129	132.6	112.7	39.2	155,000
Lockheed 1011-1	C-IV	138	155.3	177.7	55.8	430,000
Lockheed 1011-100	C-IV	140	155.3	177.7	55.8	466,000
Lockheed 1011-200	C-IV	140	155.3	177.7	55.8	466,000
Lockheed 1011-250	D-IV	144	155.3	177.7	55.8	496,000
Lockheed 1011-500	D-IV	144	155.3	164.2	55.8	496,000
Lockheed 1011-500 Ex. Wing	D-IV	148	164.3	164.2	55.8	496,000
Lockheed 1011-600	C-IV	140 *	142.8	141.0	53.0	264,000
Lockheed 1049 Constellat'n	B-IV	113	123.0	113.6	24.8	137,500
Lockheed 1329 JetStar	C-II	132	54.4	60.4	20.4	43,750
Lockheed 1649 Constellat'n	A-IV	89	150.0	116.2	23.4	160,000
Lockheed 188 Electra	C-III	123	99.0	104.6	33.7	116,000
Lockheed 400	C-IV	121 *	119.7	97.8	38.1	84,000
Lockheed 749 Constellat'n	B-IV	93	123.0	95.2	22.4	107,000
Lockheed C-141A Starlifter	C-IV	129	159.9	145.0	39.3	316,600
Lockheed C-141B Starlifter	C-IV	129	159.9	168.3	39.3	343,000
Lockheed C-5B Galaxy	C-VI	135	222.7	247.8	65.1	837,000

Aircraft	Airport Reference Code	Appch Speed Knots	Wingspan Feet	Length Feet	Tail Height Feet	Maximum Takeoff Lbs
Lockheed P-3 Orion	C-III	134	99.7	116.8	33.8	135,000
Lockheed SR-71 Blackbird	E-II	180	55.6	107.4	18.5	170,000
MAI-QSTOL	A-III	85	100.3	98.4	32.8	85,300
Marshall (Shorts) Belfast	C-IV	126	158.8	136.4	47.0	230,000
Martin-404	B-III	98	93.3	74.6	28.7	44,900
MDC-C-133	C-V	128	179.7	157.5	48.2	300,000
MDC-DC-10-10	C-IV	136	155.3	182.3	58.4	443,000
MDC-DC-10-30	D-IV	151	165.3	181.6	58.6	590,000
MDC-DC-10-40	D-IV	145	165.4	182.3	58.6	555,000
MDC-DC-3	A-III	72	95.0	64.5	23.5	25,200
MDC-DC-4	B-III	95	117.5	93.9	27.9	73,000
MDC-DC-6A/B	B-III	108	117.5	105.6	29.3	104,000
MDC-DC-7	B-IV	110	127.5	112.3	31.7	143,000
MDC-DC-8-10	C-IV	131	142.4	150.8	43.3	276,000
MDC-DC-8-20/30/40	C-IV	133	142.4	150.8	43.3	315,000
MDC-DC-8-50	C-IV	137	142.4	150.8	43.3	325,000
MDC-DC-8-61	D-IV	142	142.4	187.4	43.0	325,000
MDC-DC-8-62	C-IV	124	148.4	157.5	43.4	350,000
MDC-DC-8-63	D-IV	147	148.4	187.4	43.0	355,000
MDC-DC-9-10/15	C-III	134	89.4	104.4	27.6	90,700
MDC-DC-9-20	C-III	124	93.3	104.4	27.4	98,000
MDC-DC-9-30	C-III	127	93.3	119.3	27.8	110,000
MDC-DC-9-40	C-III	129	93.3	125.6	28.4	114,000
MDC-DC-9-50	C-III	132	93.3	133.6	28.8	121,000
MDC-DC-9-80	C-III	132	107.8	147.8	30.3	140,000
MDC-DC-9-82	C-III	135	107.8	147.8	30.3	149,500
MDC-MD-11	D-IV	155	169.8	201.3	57.8	602,500
Mitsubishi Diamond MU-300	B-I	100	43.5	48.4	13.8	15,730
Mitsubishi Marquise MU-2N	A-I	88	39.2	39.5	13.7	11,575
Mitsubishi MU-2G	B-I	119	39.2	39.5	13.8	10,800
Mitsubishi Solitaire MU-2P	A-I	87	39.2	33.3	12.9	10,470
Nihon YS-11	B-III	98	105.0	86.3	29.5	54,010
Nomad N 22B	A-II	69	54.0	41.2	18.1	8,950
Nomad N 24A	A-II	73	54.2	47.1	18.2	9,400
Partenavia P.68B Victor	A-I	73	39.3	35.6	11.9	6,283
Piaggio PD-808	B-I	117	43.3	42.2	15.8	18,300
Piaggio P-166 Portofino	A-I	82	47.2	39.0	16.4	9,480
Pilatus PC-6 Porter	A-II	57	49.7	37.4	10.5	4,850
Piper 31-310 Navajo	B-I	100	40.7	32.7	13.0	6,200
Piper 400LS Cheyenne	B-I	110	47.7	43.4	17.0	12,050
Piper 60-602P Aerostar	B-I	94	36.7	34.8	12.1	6,000
PZL-AN-2	A-II	54	59.8	41.9	13.1	12,125
PZL-AN-28	A-II	85	72.4	42.9	16.1	14,330
PZL-M-15 Belphegor	A-II	62	73.6	41.9	17.6	12,465
Rockwell 690A Turbo Comdr.	B-I	97	46.5	44.3	14.9	10,300
Rockwell 840	B-II	98	52.1	42.9	14.9	10,325
Rockwell 980	C-II	121	52.1	42.9	14.9	10,325
Rockwell B-1	D-IV	165 *	137.0	147.0	34.0	477,000
Rockwell Sabre 40	B-I	120	44.5	43.8	16.0	18,650
Rockwell Sabre 60	B-I	120	44.5	48.3	16.0	20,000
Rockwell Sabre 65	B-II	105	50.5	46.1	16.0	24,000

Aircraft	Airport Reference Code	Appch Speed Knots	Wingspan Feet	Length Feet	Tail Height Feet	Maximum Takeoff Lbs
Rockwell Sabre 75A	C-I	137	44.5	47.2	17.2	23,300
Rockwell Sabre 80	C-II	128	50.4	47.2	17.3	24,500
Shorts 330	B-II	96	74.7	58.0	16.2	22,900
Shorts 360	B-II	104	74.8	70.8	23.7	26,453
Swearingen Merlin 3B	B-I	105	46.2	42.2	16.7	12,500
Swearingen Metro	B-I	112	46.2	59.4	16.7	12,500
Tupolev TU-114	C-IV	132 *	167.6	177.5	50.0	361,620
Tupolev TU-124	C-III	132 *	83.8	100.3	50.0	80,482
Tupolev TU-134	D-III	144	95.2	121.5	30.0	103,600
Tupolev TU-144	E-III	178	94.8	212.6	42.2	396,000
Tupolev TU-154	D-IV	145	123.3	157.2	37.4	216,050
VFW-Fokker 614	B-II	111	70.5	67.5	25.6	44,000
Vickers Vanguard 950	B-IV	119	118.0	122.9	34.9	146,500
Vickers VC-10-1100	C-IV	128	146.2	158.7	39.5	312,000
Vickers VC-10-1150	C-IV	138	146.2	171.7	39.5	335,100
Vickers VC-2-810/840	C-III	122	94.0	85.7	26.8	72,500
Volpar Turbo 18	B-I	100	46.0	37.4	9.6	10,280
Yakovlev YAK-40	C-III	128 *	82.2	65.9	21.3	35,275
Yakovlev YAK-42	C-III	128 *	112.2	119.3	32.2	117,950
Yunshu-11	A-II	80 *	55.7	39.4	15.1	7,150

* Approach speeds estimated.

Section 2. Alphabetical Listing (SI units)

Aircraft	Airport Reference Code	Appch Speed Knots	Wingspan Meters	Length Meters	Tail Height Meters	Maximum Takeoff Kg
Aeritalia G-222	B-III	109	28.6	22.7	9.8	27,987
Aerocom Skyliner	A-II	88	16.5	16.6	5.0	5,670
Aerospatiale C 160 Trans.	C-IV	124	40.0	32.4	11.8	49,258
Aerospatiale NORD-262	B-II	96	21.9	19.3	6.2	10,650
Aerospatiale SE 210 Carav.	C-III	127	34.3	32.0	8.7	52,000
Aerospatiale SN 601 Corv.	B-I	118	12.9	13.8	4.2	6,600
Ahrens AR 404	B-II	98	20.1	16.1	5.8	8,391
AIDC/CAF XC-2	A-III	86	24.9	20.1	7.7	12,474
Airbus A-300-600	C-IV	135	44.8	54.1	16.7	165,000
Airbus A-300-B4	C-IV	132	44.8	53.5	16.9	150,003
Airbus A-310-300	C-IV	125	43.9	46.7	15.9	150,000
Airbus A-320-100	C-III	138	33.9	37.6	11.9	66,000
Air-Metal AM-C 111	B-II	96	19.2	16.8	6.4	8,450
AJI Hustler 400	B-I	98	8.5	10.6	3.0	2,722
Antonov AN-10	C-IV	126	38.0	37.0	9.8	55,111
Antonov AN-12	C-IV	127	38.0	33.2	10.5	55,111
Antonov AN-124	C-VI	124	70.7	68.0	20.2	362,874
Antonov AN-14	A-II	52	22.0	11.3	4.6	3,450
Antonov AN-22	C-V	140 *	64.3	50.9	12.6	226,796
Antonov AN-24	B-III	119	29.2	23.5	8.3	21,004
Antonov AN-26	C-III	121	29.2	23.8	8.6	24,004
Antonov AN-28	A-II	88	22.0	13.0	4.9	5,602
Antonov AN-30	B-III	112	29.4	24.4	8.3	23,151
Antonov AN-72	A-III	89 *	25.8	25.8	8.2	29,937
AW.650 Argosy 220	C-III	123	35.1	26.5	8.2	42,184
AW.660 Argosy C.Mk.1	B-III	113	35.1	27.2	8.2	43,998
BAC 111-200	C-III	129	27.0	28.5	7.5	35,834
BAC 111-300	C-III	128	27.0	28.5	7.5	40,143
BAC 111-400	C-III	137	27.0	28.5	7.5	39,463
BAC 111-475	C-III	135	28.5	28.5	7.5	44,679
BAC 111-500	D-III	144	28.5	32.6	7.5	47,400
BAC/Aerospatiale Concord	D-III	162	25.5	62.6	11.4	185,066
BAe 146-100	B-III	113	26.3	26.2	8.6	33,838
BAe 146-200	B-III	117	26.3	28.6	8.6	40,030
BAe 146-300	C-III	121	26.3	31.8	8.6	47,174
BAe Jetstream 31	B-II	99	15.8	14.4	5.3	6,600
Beech Airliner 1900-C	B-II	120 *	16.6	17.6	4.5	7,530
Beech Airliner C99	B-I	107	14.0	13.6	4.4	5,126
Beech Baron 58	B-I	96	11.5	9.1	3.0	2,495
Beech Baron 58P	B-I	101	11.5	9.1	2.8	2,812
Beech Baron 58TC	B-I	101	11.5	9.1	2.8	2,812
Beech Baron B55	A-I	90	11.5	8.5	2.8	2,313
Beech Baron E55	A-I	88	11.5	8.8	2.8	2,404
Beech Bonanza A36	A-I	72	10.2	8.4	2.6	1,656
Beech Bonanza B36TC	A-I	75	11.5	8.4	2.6	1,746
Beech Bonanza F33A	A-I	70	10.2	8.1	2.5	1,542
Beech Bonanza V35B	A-I	70	10.2	8.0	2.0	1,542
Beech Duchess 76	A-I	76	11.6	8.8	2.9	1,769
Beech Duke B60	B-I	98	11.9	10.3	3.7	3,073

Aircraft	Airport Reference Code	Appch Speed Knots	Wingspan Meters	Length Meters	Tail Height Meters	Maximum Takeoff Kg
Beech E18S	A-II	87	15.1	10.7	2.9	4,218
Beech King Air B100	B-I	111	14.0	12.2	4.7	5,352
Beech King Air C90-1	B-II	100	15.3	10.8	4.3	4,377
Beech King Air F90	B-I	108	14.0	12.1	4.6	4,967
Beech Sierra 200-B24R	A-I	70	10.0	7.8	2.5	1,247
Beech Skipper 77	A-I	63	9.1	7.3	2.1	760
Beech Sundowner 180-C23	A-I	68	10.0	7.8	2.5	1,111
Beech Super King Air B200	B-II	103	16.6	13.4	4.6	5,670
BN-2A Mk.3 Trislander	A-II	65	16.2	13.9	4.3	4,536
Boeing 707-100	C-IV	139	39.9	44.2	12.7	116,727
Boeing 707-200	D-IV	145	39.9	44.2	12.7	116,727
Boeing 707-320	C-IV	139	43.4	46.6	12.9	141,521
Boeing 707-320B	C-IV	136	44.4	46.6	12.8	152,679
Boeing 707-420	C-IV	132	43.4	46.6	12.9	141,521
Boeing 720	C-IV	133	39.9	41.5	12.6	104,009
Boeing 720B	C-IV	137	39.9	41.7	12.6	106,277
Boeing 727-100	C-III	125	32.9	40.6	10.5	76,657
Boeing 727-200	C-III	138	32.9	46.7	10.6	95,028
Boeing 737-100	C-III	137	28.3	28.7	11.3	49,895
Boeing 737-200	C-III	137	28.3	30.5	11.4	52,390
Boeing 737-300	C-III	137	28.9	33.4	11.2	61,235
Boeing 737-400	C-III	139	28.9	36.5	11.2	68,039
Boeing 737-500	C-III	140 *	28.9	31.0	11.2	60,555
Boeing 747-100	D-V	152	59.6	70.7	19.6	272,155
Boeing 747-200	D-V	152	59.6	70.7	19.7	377,842
Boeing 747-300SR	D-V	141	59.6	70.7	19.6	272,155
Boeing 747-400	D-V	154	64.9	70.7	19.6	394,625
Boeing 747-SP	C-V	140	59.6	56.3	20.1	315,700
Boeing 757	C-IV	135	38.0	47.3	13.7	115,666
Boeing 767-200	C-IV	130	47.6	48.5	16.1	142,882
Boeing 767-300	C-IV	130	47.6	55.0	16.0	158,757
Boeing 777	D-IV	145	47.2	55.3	13.7	172,365
Boeing B-52	D-V	141 *	56.4	48.0	12.4	221,353
Boeing C97 Stratocruiser	B-IV	105	43.1	33.6	11.7	66,134
Boeing E-3	C-IV	137	44.5	46.6	12.8	147,418
Boeing E-4 (747-200)	D-V	152	59.6	70.7	19.7	377,842
Boeing YC-14	A-IV	89	39.3	40.1	14.7	97,976
Bristol Brittania 300/310	B-IV	117	43.4	37.9	11.4	83,915
Canadair CL-44	C-IV	123	43.4	41.7	11.7	95,254
Canadair CL-600	C-II	125	18.8	20.8	6.3	18,711
Casa C-207A Azor	B-III	102	27.8	20.8	7.7	16,511
Casa C-212-200 Aviocar	A-II	81	19.0	15.2	6.3	7,700
Cessna Citation I	B-I	108	14.4	13.3	4.4	5,375
Cessna Citation II	B-II	108	15.8	14.4	4.6	6,033
Cessna Citation III	B-II	114	16.3	16.9	5.1	9,979
Cessna-150	A-I	55	10.0	7.3	2.4	726
Cessna-177 Cardinal	A-I	64	10.8	8.3	2.6	1,134
Cessna-402 Businessliner	B-I	95	12.1	11.0	3.5	2,858
Cessna-404 Titan	B-I	92	14.1	12.0	4.0	3,810
Cessna-414 Chancellor	B-I	94	13.4	11.1	3.5	3,078
Cessna-421 Golden Eagle	B-I	96	12.7	11.0	3.5	3,379

Aircraft	Airport Reference Code	Appch Speed Knots	Wingspan Meters	Length Meters	Tail Height Meters	Maximum Takeoff Kg
Cessna-441 Conquest	B-II	100	15.0	11.9	4.0	4,502
Convair 240	B-III	107	28.0	22.8	8.2	18,956
Convair 340	B-III	104	32.1	24.8	8.6	22,271
Convair 440	B-III	106	32.1	24.8	8.6	22,271
Convair 580	B-III	107	32.1	24.8	8.9	24,766
Dassault 1150 Atlantic	C-IV	130 *	37.4	31.8	11.3	45,359
Dassault 941	A-II	59	23.4	23.7	9.4	26,490
Dassault FAL-10	B-I	104	13.1	13.9	4.6	8,500
Dassault FAL-20	B-II	107	16.3	17.2	5.3	13,000
Dassault FAL-200	B-II	114	16.3	17.2	5.3	13,903
Dassault FAL-50	B-II	113	18.9	18.5	7.0	17,001
Dassault FAL-900	B-II	100	19.3	20.2	7.6	20,638
Dassault Mercure	B-III	117	30.5	34.8	11.4	56,472
DHC-2 Beaver	A-I	50	14.6	9.2	2.7	2,313
DHC-4 Caribou	A-III	77	29.1	22.1	9.7	12,927
DHC-5D Buffalo	B-III	91	29.3	24.1	8.7	22,317
DHC-6-300 Twin Otter	A-II	75	19.8	15.8	5.9	5,670
DHC-7 Dash 7-100	A-III	83	28.3	24.6	8.0	19,504
DHC-8 Dash 8-300	A-III	90	27.4	25.7	7.5	18,643
DH.104 Dove 8	A-II	84	17.4	11.9	4.1	4,060
DH.106 Comet 4C	B-III	108	35.1	36.0	9.0	73,482
DH.114 Heron 2	A-II	85	21.8	14.8	4.8	6,123
Dornier DO 28D-2	A-II	74	15.5	11.4	3.9	4,017
Dornier LTA	A-II	74 *	17.8	16.6	5.5	6,849
Embraer-110 Bandeirante	B-II	92	15.3	15.1	5.0	5,900
Embraer-121 Xingu	B-I	92	14.4	12.3	4.8	5,670
Embraer-326 Xavante	B-I	102	10.9	10.6	3.7	5,216
Embraer-820 Navajo Chief	A-I	74	12.4	10.5	4.0	3,175
Fairchild C-119	C-III	122	33.3	26.4	8.4	34,927
Fairchild C-121	A-III	88	33.5	23.1	10.4	27,216
Fairchild FH-227 B,D	B-III	105	29.0	25.3	8.4	20,638
Fairchild F-27 A,J	B-III	109	29.0	23.5	8.4	19,051
FMA IA-50 Guarni II	B-II	101	19.5	14.9	5.8	7,121
Fokker F-27-500	B-III	102	29.0	25.1	8.9	20,412
Fokker F-28-1000	B-II	119	23.6	27.4	8.5	29,484
Fokker F-28-2000	B-II	119	23.6	29.6	8.5	29,484
Fokker F-28-3000	C-III	121	25.1	27.4	8.5	33,112
Fokker F-28-4000	C-III	121	25.1	29.6	8.5	33,112
Fokker F-28-6000	B-III	113	25.1	29.6	8.5	33,112
Foxjet ST-600-8	B-I	97	9.6	9.7	3.1	2,064
GAC-100	A-II	86	21.3	20.5	7.6	13,109
Gates Learjet 24	C-I	128	10.9	13.2	3.8	5,897
Gates Learjet 25	C-I	137	10.9	14.5	3.8	6,804
Gates Learjet 28/29	B-I	120	13.3	14.5	3.7	6,804
Gates Learjet 35A/36A	D-I	143	12.0	14.8	3.7	8,301
Gates Learjet 54-55-56	C-I	128	13.3	16.8	4.5	9,752
General Dynamics 880	D-IV	155	36.6	39.4	11.0	87,770
General Dynamics 990	D-IV	156	36.6	42.4	12.0	115,666
Grumman Gulfstream I	B-II	113	23.9	23.0	7.0	16,329
Grumman Gulfstream II	D-II	141	21.0	24.4	7.5	29,620
Grumman Gulfstream III	C-II	136	23.7	25.3	7.4	31,162

Aircraft	Airport Reference Code	Appch Speed Knots	Wingspan Meters	Length Meters	Tail Height Meters	Maximum Takeoff Kg
Grumman Gulfstream II-TT	D-II	142	21.9	24.4	7.5	29,620
Grumman Gulfstream IV	D-II	145	23.7	26.8	7.4	32,559
Hamilton Westwind II STD	B-I	96	14.0	13.7	2.8	5,668
HFB-320 Hansa	C-I	125	14.5	16.6	4.9	9,199
Hindustan HS.748-2	B-III	94	30.0	20.4	7.6	20,140
HP Herald	A-III	88	28.9	23.0	7.3	19,504
HS 125 Series 400A	C-I	124	14.3	14.4	5.0	10,569
HS 125 Series 600A	C-I	125	14.3	15.4	5.2	11,340
HS 125 Series 700A	C-I	125	14.3	15.5	5.4	10,977
HS.121 Trident 1E	C-III	137	29.0	35.0	8.2	61,462
HS.121 Trident 2E	C-III	138	29.9	35.0	8.2	65,317
HS.121 Trident 3B	D-III	143	29.9	40.0	8.6	68,039
HS.121 Trident Super 3B	D-III	146	29.9	40.0	8.6	71,668
HS.748 Series 2A	B-III	94	30.0	20.4	7.6	20,180
HS.780 Andover C.Mk.1	B-III	100	29.9	23.8	9.2	22,680
HS.801 Nimrod MR Mk.2	C-III	125 *	35.0	38.6	9.1	80,513
IAI 1121 Jet Comdr.	C-I	130	13.2	15.4	4.8	7,620
IAI Arava-201	A-II	81	20.9	13.0	5.2	6,804
IAI-1124 Westwind	C-I	129	13.7	15.9	4.8	10,659
Ilyushin Il-12	A-III	78	31.7	21.3	9.3	17,237
Ilyushin Il-18	B-IV	103	37.4	35.9	10.1	61,072
Ilyushin Il-62	D-IV	152	43.2	53.1	12.3	164,999
Ilyushin Il-76	B-IV	119	50.5	46.6	14.8	170,000
Ilyushin Il-86	D-IV	141	48.1	59.5	15.8	205,999
Kawasaki C-1	B-III	118 *	30.6	29.0	10.0	38,701
Lapan XT-400	A-I	75	14.6	10.2	4.3	2,520
Learfan 2100	A-I	86	12.0	12.4	3.7	3,357
LET L-410 UVP-E	A-II	81	20.0	14.5	5.8	6,400
Lockheed 100-20 Hercules	C-IV	137	40.4	32.3	12.0	70,307
Lockheed 100-30 Hercules	C-IV	129	40.4	34.4	11.9	70,307
Lockheed 1011-1	C-IV	138	47.3	54.2	17.0	195,045
Lockheed 1011-100	C-IV	140	47.3	54.2	17.0	211,374
Lockheed 1011-200	C-IV	140	47.3	54.2	17.0	211,374
Lockheed 1011-250	D-IV	144	47.3	54.2	17.0	224,982
Lockheed 1011-500	D-IV	144	47.3	50.0	17.0	224,982
Lockheed 1011-500 Ex. Wing	D-IV	148	50.1	50.0	17.0	224,982
Lockheed 1011-600	C-IV	140 *	43.5	43.0	16.2	119,748
Lockheed 1049 Constellat'n	B-IV	113	37.5	34.6	7.6	62,369
Lockheed 1329 JetStar	C-II	132	16.6	18.4	6.2	19,845
Lockheed 1649 Constellat'n	A-IV	89	45.7	35.4	7.1	72,575
Lockheed 188 Electra	C-III	123	30.2	31.9	10.3	52,617
Lockheed 400	C-IV	121 *	36.5	29.8	11.6	38,102
Lockheed 749 Constellat'n	B-IV	93	37.5	29.0	6.8	48,534
Lockheed C-141A Starlifter	C-IV	129	48.7	44.2	12.0	143,607
Lockheed C-141B Starlifter	C-IV	129	48.7	51.3	12.0	155,582
Lockheed C-5B Galaxy	C-VI	135	67.9	75.5	19.8	379,657
Lockheed P-3 Orion	C-III	134	30.4	35.6	10.3	61,235
Lockheed SR-71 Blackbird	E-II	180	16.9	32.7	5.6	77,111
MAI-QSTOL	A-III	85	30.6	30.0	10.0	38,691
Marshall (Shorts) Belfast	C-IV	126	48.4	41.6	14.3	104,326
Martin-404	B-III	98	28.4	22.7	8.7	20,366

Aircraft	Airport Reference Code	Appch Speed Knots	Wingspan Meters	Length Meters	Tail Height Meters	Maximum Takeoff Kg
MDC-C-133	C-V	128	54.8	48.0	14.7	136,078
MDC-DC-10-10	C-IV	136	47.3	55.6	17.8	200,941
MDC-DC-10-30	D-IV	151	50.4	55.4	17.9	267,619
MDC-DC-10-40	D-IV	145	50.4	55.6	17.9	251,744
MDC-DC-3	A-III	72	29.0	19.7	7.2	11,431
MDC-DC-4	B-III	95	35.8	28.6	8.5	33,112
MDC-DC-6A/B	B-III	108	35.8	32.2	8.9	47,174
MDC-DC-7	B-IV	110	38.9	34.2	9.7	64,864
MDC-DC-8-10	C-IV	131	43.4	46.0	13.2	125,191
MDC-DC-8-20/30/40	C-IV	133	43.4	46.0	13.2	142,882
MDC-DC-8-50	C-IV	137	43.4	46.0	13.2	147,418
MDC-DC-8-61	D-IV	142	43.4	57.1	13.1	147,418
MDC-DC-8-62	C-IV	124	45.2	48.0	13.2	158,757
MDC-DC-8-63	D-IV	147	45.2	57.1	13.1	161,025
MDC-DC-9-10/15	C-III	134	27.2	31.8	8.4	41,141
MDC-DC-9-20	C-III	124	28.4	31.8	8.4	44,452
MDC-DC-9-30	C-III	127	28.4	36.4	8.5	49,895
MDC-DC-9-40	C-III	129	28.4	38.3	8.7	51,710
MDC-DC-9-50	C-III	132	28.4	40.7	8.8	54,885
MDC-DC-9-80	C-III	132	32.9	45.0	9.2	63,503
MDC-DC-9-82	C-III	135	32.9	45.0	9.2	67,812
MDC-MD-11	D-IV	155	51.8	61.4	17.6	273,289
Mitsubishi Diamond MU-300	B-I	100	13.3	14.8	4.2	7,135
Mitsubishi Marquise MU-2N	A-I	88	11.9	12.0	4.2	5,250
Mitsubishi MU-2G	B-I	119	11.9	12.0	4.2	4,899
Mitsubishi Solitaire MU-2P	A-I	87	11.9	10.1	3.9	4,749
Nihon YS-11	B-III	98	32.0	26.3	9.0	24,499
Nomad N 22B	A-II	69	16.5	12.6	5.5	4,060
Nomad N 24A	A-II	73	16.5	14.4	5.5	4,264
Partenavia P.68B Victor	A-I	73	12.0	10.9	3.6	2,850
Piaggio PD-808	B-I	117	13.2	12.9	4.8	8,301
Piaggio P-166 Portofino	A-I	82	14.4	11.9	5.0	4,300
Pilatus PC-6 Porter	A-II	57	15.1	11.4	3.2	2,200
Piper 31-310 Navajo	B-I	100	12.4	10.0	4.0	2,812
Piper 400LS Cheyenne	B-I	110	14.5	13.2	5.2	5,466
Piper 60-602P Aerostar	B-I	94	11.2	10.6	3.7	2,722
PZL-AN-2	A-II	54	18.2	12.8	4.0	5,500
PZL-AN-28	A-II	85	22.1	13.1	4.9	6,500
PZL-M-15 Belphegor	A-II	62	22.4	12.8	5.4	5,654
Rockwell 690A Turbo Comdr.	B-I	97	14.2	13.5	4.5	4,672
Rockwell 840	B-II	98	15.9	13.1	4.5	4,683
Rockwell 980	C-II	121	15.9	13.1	4.5	4,683
Rockwell B-1	D-IV	165 *	41.8	44.8	10.4	216,364
Rockwell Sabre 40	B-I	120	13.6	13.4	4.9	8,459
Rockwell Sabre 60	B-I	120	13.6	14.7	4.9	9,072
Rockwell Sabre 65	B-II	105	15.4	14.1	4.9	10,886
Rockwell Sabre 75A	C-I	137	13.6	14.4	5.2	10,569
Rockwell Sabre 80	C-II	128	15.4	14.4	5.3	11,113
Shorts 330	B-II	96	22.8	17.7	4.9	10,387
Shorts 360	B-II	104	22.8	21.6	7.2	11,999
Swearingen Merlin 3B	B-I	105	14.1	12.9	5.1	5,670

Aircraft	Airport Reference Code	Appch Speed Knots	Wingspan Meters	Length Meters	Tail Height Meters	Maximum Takeoff Kg
Swearingen Metro	B-I	112	14.1	18.1	5.1	5,670
Tupolev TU-114	C-IV	132 *	51.1	54.1	15.2	164,028
Tupolev TU-124	C-III	132 *	25.5	30.6	15.2	36,506
Tupolev TU-134	D-III	144	29.0	37.0	9.1	46,992
Tupolev TU-144	E-III	178	28.9	64.8	12.9	179,623
Tupolev TU-154	D-IV	145	37.6	47.9	11.4	97,999
VFW-Fokker 614	B-II	111	21.5	20.6	7.8	19,958
Vickers Vanguard 950	B-IV	119	36.0	37.5	10.6	66,451
Vickers VC-10-1100	C-IV	128	44.6	48.4	12.0	141,521
Vickers VC-10-1150	C-IV	138	44.6	52.3	12.0	151,999
Vickers VC-2-810/840	C-III	122	28.7	26.1	8.2	32,885
Volpar Turbo 18	B-I	100	14.0	11.4	2.9	4,663
Yakovlev YAK-40	C-III	128 *	25.1	20.1	6.5	16,000
Yakovlev YAK-42	C-III	128 *	34.2	36.4	9.8	53,501
Yunshu-11	A-II	80 *	17.0	12.0	4.6	3,243

* Approach speeds estimated.

Section 3. Listing Small Airplanes by Airport Reference Code (U.S. customary units)

Aircraft	Airport Reference Code	Appch Speed Knots	Wingspan Feet	Length Feet	Tail Height Feet	Maximum Takeoff Lbs
Beech Baron B55	A-I	90	37.8	28.0	9.1	5,100
Beech Baron E55	A-I	88	37.8	29.0	9.1	5,300
Beech Bonanza A36	A-I	72	33.5	27.5	8.6	3,650
Beech Bonanza B36TC	A-I	75	37.8	27.5	8.6	3,850
Beech Bonanza F33A	A-I	70	33.5	26.7	8.2	3,400
Beech Bonanza V35B	A-I	70	33.5	26.4	6.6	3,400
Beech Duchess 76	A-I	76	38.0	29.0	9.5	3,900
Beech Sierra 200-B24R	A-I	70	32.8	25.7	8.2	2,750
Beech Skipper 77	A-I	63	30.0	24.0	6.9	1,675
Beech Sundowner 180-C23	A-I	68	32.8	25.7	8.2	2,450
Cessna-150	A-I	55	32.7	23.8	8.0	1,600
Cessna-177 Cardinal	A-I	64	35.5	27.2	8.5	2,500
DHC-2 Beaver	A-I	50	48.0	30.3	9.0	5,100
Embraer-820 Navajo Chief	A-I	74	40.7	34.6	13.0	7,000
Lapan XT-400	A-I	75	47.9	33.5	14.1	5,555
Learfan 2100	A-I	86	39.3	40.6	12.2	7,400
Mitsubishi Marquise MU-2N	A-I	88	39.2	39.5	13.7	11,575
Mitsubishi Solitaire MU-2P	A-I	87	39.2	33.3	12.9	10,470
Partenavia P.68B Victor	A-I	73	39.3	35.6	11.9	6,283
Piaggio P-166 Portofino	A-I	82	47.2	39.0	16.4	9,480
AJI Hustler 400	B-I	98	28.0	34.8	9.8	6,000
Beech Airliner C99	B-I	107	45.9	44.6	14.4	11,300
Beech Baron 58	B-I	96	37.8	29.8	9.8	5,500
Beech Baron 58P	B-I	101	37.8	29.8	9.1	6,200
Beech Baron 58TC	B-I	101	37.8	29.8	9.1	6,200
Beech Duke B60	B-I	98	39.2	33.8	12.3	6,775
Beech King Air B100	B-I	111	45.8	39.9	15.3	11,800
Beech King Air F90	B-I	108	45.9	39.8	15.1	10,950
Cessna Citation I	B-I	108	47.1	43.5	14.3	11,850
Cessna-402 Businessliner	B-I	95	39.8	36.1	11.6	6,300
Cessna-404 Titan	B-I	92	46.3	39.5	13.2	8,400
Cessna-414 Chancellor	B-I	94	44.1	36.4	11.5	6,785
Cessna-421 Golden Eagle	B-I	96	41.7	36.1	11.6	7,450
Embraer-121 Xingu	B-I	92	47.4	40.2	15.9	12,500
Embraer-326 Xavante	B-I	102	35.6	34.9	12.2	11,500
Foxjet ST-600-8	B-I	97	31.6	31.8	10.2	4,550
Hamilton Westwind II STD	B-I	96	46.0	45.0	9.2	12,495
Mitsubishi MU-2G	B-I	119	39.2	39.5	13.8	10,800
Piper 31-310 Navajo	B-I	100	40.7	32.7	13.0	6,200
Piper 400LS Cheyenne	B-I	110	47.7	43.4	17.0	12,050
Piper 60-602P Aerostar	B-I	94	36.7	34.8	12.1	6,000
Rockwell 690A Turbo Comdr.	B-I	97	46.5	44.3	14.9	10,300
Swearingen Merlin 3B	B-I	105	46.2	42.2	16.7	12,500
Swearingen Metro	B-I	112	46.2	59.4	16.7	12,500
Volpar Turbo 18	B-I	100	46.0	37.4	9.6	10,280
Aerocom Skyliner	A-II	88	54.0	54.3	16.5	12,500
Antonov AN-14	A-II	52	72.1	37.2	15.2	7,607
Antonov AN-28	A-II	88	72.1	42.6	16.1	12,350
Beech E18S	A-II	87	49.7	35.2	9.5	9,300

Aircraft	Airport Reference Code	Appch Speed Knots	Wingspan Feet	Length Feet	Tail Height Feet	Maximum Takeoff Lbs
BN-2A Mk.3 Trislander	A-II	65	53.0	45.7	14.2	10,000
DHC-6-300 Twin Otter	A-II	75	65.0	51.7	19.5	12,500
DH.104 Dove 8	A-II	84	57.0	39.2	13.3	8,950
Dornier DO 28D-2	A-II	74	51.0	37.4	12.8	8,855
Nomad N 22B	A-II	69	54.0	41.2	18.1	8,950
Nomad N 24A	A-II	73	54.2	47.1	18.2	9,400
Pilatus PC-6 Porter	A-II	57	49.7	37.4	10.5	4,850
PZL-AN-2	A-II	54	59.8	41.9	13.1	12,125
PZL-M-15 Belphegor	A-II	62	73.6	41.9	17.6	12,465
Yunshu-11	A-II	80 *	55.7	39.4	15.1	7,150
Beech King Air C90-1	B-II	100	50.2	35.5	14.2	9,650
Beech Super King Air B200	B-II	103	54.5	43.8	15.0	12,500
Cessna-441 Conquest	B-II	100	49.3	39.0	13.1	9,925
Rockwell 840	B-II	98	52.1	42.9	14.9	10,325
Rockwell 980	C-II	121	52.1	42.9	14.9	10,325

* Approach speeds estimated.

Section 4. Listing Large Airplanes by Airport Reference Code (U.S. customary units)

Aircraft	Airport Reference Code	Appch Speed Knots	Wingspan Feet	Length Feet	Tail Height Feet	Maximum Takeoff Lbs
Aerospatiale SN 601 Corv.	B-I	118	42.2	45.4	13.9	14,550
Dassault FAL-10	B-I	104	42.9	45.5	15.1	18,740
Gates Learjet 28/29	B-I	120	43.7	47.6	12.3	15,000
Mitsubishi Diamond MU-300	B-I	100	43.5	48.4	13.8	15,730
Piaggio PD-808	B-I	117	43.3	42.2	15.8	18,300
Rockwell Sabre 40	B-I	120	44.5	43.8	16.0	18,650
Rockwell Sabre 60	B-I	120	44.5	48.3	16.0	20,000
Gates Learjet 24	C-I	128	35.6	43.3	12.6	13,000
Gates Learjet 25	C-I	137	35.6	47.6	12.6	15,000
Gates Learjet 54-55-56	C-I	128	43.7	55.1	14.7	21,500
HFB-320 Hansa	C-I	125	47.5	54.5	16.2	20,280
HS 125 Series 400A	C-I	124	47.0	47.4	16.5	23,300
HS 125 Series 600A	C-I	125	47.0	50.5	17.2	25,000
HS 125 Series 700A	C-I	125	47.0	50.7	17.6	24,200
IAI 1121 Jet Comdr.	C-I	130	43.3	50.4	15.8	16,800
IAI-1124 Westwind	C-I	129	44.8	52.3	15.8	23,500
Rockwell Sabre 75A	C-I	137	44.5	47.2	17.2	23,300
Gates Learjet 35A/36A	D-I	143	39.5	48.7	12.3	18,300
Casa C-212-200 Aviocar	A-II	81	62.3	49.8	20.7	16,976
Dassault 941	A-II	59	76.7	77.9	30.7	58,400
DH.114 Heron 2	A-II	85	71.5	48.5	15.6	13,500
Dornier LTA	A-II	74 *	58.4	54.4	18.2	15,100
GAC-100	A-II	86	70.0	67.3	24.9	28,900
IAI Arava-201	A-II	81	68.6	42.7	17.1	15,000
LET L-410 UVP-E	A-II	81	65.5	47.5	19.1	14,109
PZL-AN-28	A-II	85	72.4	42.9	16.1	14,330

Aircraft	Airport Reference Code	Appch Speed Knots	Wingspan Feet	Length Feet	Tail Height Feet	Maximum Takeoff Lbs
Aerospatiale NORD-262	B-II	96	71.9	63.3	20.4	23,480
Ahrens AR 404	B-II	98	66.0	52.7	19.0	18,500
Air-Metal AM-C 111	B-II	96	63.0	55.2	21.0	18,629
BAe Jetstream 31	B-II	99	52.0	47.2	17.5	14,550
Beech Airliner 1900-C	B-II	120 *	54.5	57.8	14.9	16,600
Cessna Citation II	B-II	108	51.7	47.2	15.0	13,300
Cessna Citation III	B-II	114	53.5	55.5	16.8	22,000
Dassault FAL-20	B-II	107	53.5	56.3	17.4	28,660
Dassault FAL-200	B-II	114	53.5	56.3	17.4	30,650
Dassault FAL-50	B-II	113	61.9	60.8	22.9	37,480
Dassault FAL-900	B-II	100	63.4	66.3	24.8	45,500
Embraer-110 Bandeirante	B-II	92	50.3	49.5	16.5	13,007
FMA IA-50 Guarni II	B-II	101	64.1	48.8	19.1	15,700
Fokker F-28-1000	B-II	119	77.3	89.9	27.8	65,000
Fokker F-28-2000	B-II	119	77.3	97.2	27.8	65,000
Grumman Gulfstream I	B-II	113	78.3	75.3	23.0	36,000
Rockwell Sabre 65	B-II	105	50.5	46.1	16.0	24,000
Shorts 330	B-II	96	74.7	58.0	16.2	22,900
Shorts 360	B-II	104	74.8	70.8	23.7	26,453
VFW-Fokker 614	B-II	111	70.5	67.5	25.6	44,000
Canadair CL-600	C-II	125	61.8	68.4	20.7	41,250
Grumman Gulfstream III	C-II	136	77.8	83.1	24.4	68,700
Lockheed 1329 JetStar	C-II	132	54.4	60.4	20.4	43,750
Rockwell Sabre 80	C-II	128	50.4	47.2	17.3	24,500
Grumman Gulfstream II	D-II	141	68.8	79.9	24.5	65,300
Grumman Gulfstream II-TT	D-II	142	71.7	79.9	24.5	65,300
Grumman Gulfstream IV	D-II	145	77.8	87.8	24.4	71,780
Lockheed SR-71 Blackbird	E-II	180	55.6	107.4	18.5	170,000
AIDC/CAF XC-2	A-III	86	81.7	65.9	25.3	27,500
Antonov AN-72	A-III	89 *	84.7	84.7	27.0	66,000
DHC-4 Caribou	A-III	77	95.6	72.6	31.8	28,500
DHC-7 Dash 7-100	A-III	83	93.0	80.7	26.2	43,000
DHC-8 Dash 8-300	A-III	90	90.0	84.3	24.6	41,100
Fairchild C-121	A-III	88	110.0	75.8	34.1	60,000
HP Herald	A-III	88	94.8	75.5	24.1	43,000
Ilyushin Il-12	A-III	78	104.0	70.0	30.5	38,000
MAI-QSTOL	A-III	85	100.3	98.4	32.8	85,300
MDC-DC-3	A-III	72	95.0	64.5	23.5	25,200
Aeritalia G-222	B-III	109	93.8	74.4	32.0	61,700
Antonov AN-24	B-III	119	95.8	77.2	27.3	46,305
Antonov AN-30	B-III	112	96.4	80.1	27.3	51,040
AW.660 Argosy C.Mk.1	B-III	113	115.0	89.1	27.0	97,000
BAe 146-100	B-III	113	86.4	85.8	28.3	74,600
BAe 146-200	B-III	117	86.4	93.7	28.3	88,250
Casa C-207A Azor	B-III	102	91.2	68.4	25.4	36,400
Convair 240	B-III	107	91.8	74.7	26.9	41,790
Convair 340	B-III	104	105.3	81.5	28.2	49,100
Convair 440	B-III	106	105.3	81.5	28.2	49,100
Convair 580	B-III	107	105.3	81.5	29.2	54,600
Dassault Mercure	B-III	117	100.2	114.3	37.3	124,500
DHC-5D Buffalo	B-III	91	96.0	79.0	28.7	49,200

Aircraft	Airport Reference Code	Appch Speed Knots	Wingspan Feet	Length Feet	Tail Height Feet	Maximum Takeoff Lbs
DH.106 Comet 4C	B-III	108	115.0	118.0	29.5	162,000
Fairchild FH-227 B,D	B-III	105	95.2	83.1	27.5	45,500
Fairchild F-27 A,J	B-III	109	95.2	77.2	27.5	42,000
Fokker F-27-500	B-III	102	95.2	82.3	29.3	45,000
Fokker F-28-6000	B-III	113	82.3	97.2	27.8	73,000
Hindustan HS.748-2	B-III	94	98.4	67.0	24.8	44,402
HS.748 Series 2A	B-III	94	98.5	67.0	24.8	44,490
HS.780 Andover C.Mk.1	B-III	100	98.2	78.0	30.1	50,000
Kawasaki C-1	B-III	118 *	100.4	95.1	32.9	85,320
Martin-404	B-III	98	93.3	74.6	28.7	44,900
MDC-DC-4	B-III	95	117.5	93.9	27.9	73,000
MDC-DC-6A/B	B-III	108	117.5	105.6	29.3	104,000
Nihon YS-11	B-III	98	105.0	86.3	29.5	54,010
Aerospatiale SE 210 Carav.	C-III	127	112.5	105.0	28.6	114,640
Airbus A-320-100	C-III	138	111.3	123.3	39.1	145,505
Antonov AN-26	C-III	121	95.8	78.1	28.1	52,920
AW.650 Argosy 220	C-III	123	115.0	86.8	27.0	93,000
BAC 111-200	C-III	129	88.5	93.5	24.5	79,000
BAC 111-300	C-III	128	88.5	93.5	24.5	88,500
BAC 111-400	C-III	137	88.5	93.5	24.5	87,000
BAC 111-475	C-III	135	93.5	93.5	24.5	98,500
BAe 146-300	C-III	121	86.4	104.2	28.1	104,000
Boeing 727-100	C-III	125	108.0	133.2	34.3	169,000
Boeing 727-200	C-III	138	108.0	153.2	34.9	209,500
Boeing 737-100	C-III	137	93.0	94.0	37.2	110,000
Boeing 737-200	C-III	137	93.0	100.2	37.3	115,500
Boeing 737-300	C-III	137	94.8	109.6	36.6	135,000
Boeing 737-400	C-III	139	94.8	119.6	36.6	150,000
Boeing 737-500	C-III	140 *	94.8	101.8	36.6	133,500
Fairchild C-119	C-III	122	109.3	86.5	27.5	77,000
Fokker F-28-3000	C-III	121	82.3	89.9	27.8	73,000
Fokker F-28-4000	C-III	121	82.3	97.2	27.8	73,000
HS.121 Trident 1E	C-III	137	95.0	114.8	27.0	135,500
HS.121 Trident 2E	C-III	138	98.0	114.8	27.0	144,000
HS.801 Nimrod MR Mk.2	C-III	125 *	114.8	126.8	29.7	177,500
Lockheed 188 Electra	C-III	123	99.0	104.6	33.7	116,000
Lockheed P-3 Orion	C-III	134	99.7	116.8	33.8	135,000
MDC-DC-9-10/15	C-III	134	89.4	104.4	27.6	90,700
MDC-DC-9-20	C-III	124	93.3	104.4	27.4	98,000
MDC-DC-9-30	C-III	127	93.3	119.3	27.8	110,000
MDC-DC-9-40	C-III	129	93.3	125.6	28.4	114,000
MDC-DC-9-50	C-III	132	93.3	133.6	28.8	121,000
MDC-DC-9-80	C-III	132	107.8	147.8	30.3	140,000
MDC-DC-9-82	C-III	135	107.8	147.8	30.3	149,500
Tupolev TU-124	C-III	132 *	83.8	100.3	50.0	80,482
Vickers VC-2-810/840	C-III	122	94.0	85.7	26.8	72,500
Yakovlev YAK-40	C-III	128 *	82.2	65.9	21.3	35,275
Yakovlev YAK-42	C-III	128 *	112.2	119.3	32.2	117,950
BAC 111-500	D-III	144	93.5	107.0	24.5	104,500
BAC/Aerospatiale Concord	D-III	162	83.8	205.4	37.4	408,000
HS.121 Trident 3B	D-III	143	98.0	131.2	28.3	150,000

Aircraft	Airport Reference Code	Appch Speed Knots	Wingspan Feet	Length Feet	Tail Height Feet	Maximum Takeoff Lbs
HS.121 Trident Super 3B	D-III	146	98.0	131.2	28.3	158,000
Tupolev TU-134	D-III	144	95.2	121.5	30.0	103,600
Tupolev TU-144	E-III	178	94.8	212.6	42.2	396,000
Boeing YC-14	A-IV	89	129.0	131.7	48.3	216,000
Lockheed 1649 Constellat'n	A-IV	89	150.0	116.2	23.4	160,000
Boeing C97 Stratocruiser	B-IV	105	141.3	110.3	38.3	145,800
Bristol Brittania 300/310	B-IV	117	142.3	124.2	37.5	185,000
Ilyushin Il-18	B-IV	103	122.7	117.8	33.3	134,640
Ilyushin Il-76	B-IV	119	165.7	152.8	48.4	374,785
Lockheed 1049 Constellat'n	B-IV	113	123.0	113.6	24.8	137,500
Lockheed 749 Constellat'n	B-IV	93	123.0	95.2	22.4	107,000
MDC-DC-7	B-IV	110	127.5	112.3	31.7	143,000
Vickers Vanguard 950	B-IV	119	118.0	122.9	34.9	146,500
Aerospatiale C 160 Trans.	C-IV	124	131.3	106.3	38.7	108,596
Airbus A-300-600	C-IV	135	147.1	177.5	54.7	363,763
Airbus A-300-B4	C-IV	132	147.1	175.5	55.5	330,700
Airbus A-310-300	C-IV	125	144.1	153.2	52.3	330,693
Antonov AN-10	C-IV	126	124.8	121.4	32.2	121,500
Antonov AN-12	C-IV	127	124.8	109.0	34.6	121,500
Boeing 707-100	C-IV	139	130.8	145.1	41.7	257,340
Boeing 707-320	C-IV	139	142.4	152.9	42.2	312,000
Boeing 707-320B	C-IV	136	145.8	152.9	42.1	336,600
Boeing 707-420	C-IV	132	142.4	152.9	42.2	312,000
Boeing 720	C-IV	133	130.8	136.2	41.4	229,300
Boeing 720B	C-IV	137	130.8	136.8	41.2	234,300
Boeing 757	C-IV	135	124.8	155.3	45.1	255,000
Boeing 767-200	C-IV	130	156.1	159.2	52.9	315,000
Boeing 767-300	C-IV	130	156.1	180.3	52.6	350,000
Boeing E-3	C-IV	137	145.9	153.0	42.0	325,000
Canadair CL-44	C-IV	123	142.3	136.8	38.4	210,000
Dassault 1150 Atlantic	C-IV	130 *	122.7	104.2	37.2	100,000
Lockheed 100-20 Hercules	C-IV	137	132.6	106.1	39.3	155,000
Lockheed 100-30 Hercules	C-IV	129	132.6	112.7	39.2	155,000
Lockheed 1011-1	C-IV	138	155.3	177.7	55.8	430,000
Lockheed 1011-100	C-IV	140	155.3	177.7	55.8	466,000
Lockheed 1011-200	C-IV	140	155.3	177.7	55.8	466,000
Lockheed 1011-600	C-IV	140 *	142.8	141.0	53.0	264,000
Lockheed 400	C-IV	121 *	119.7	97.8	38.1	84,000
Lockheed C-141A Starlifter	C-IV	129	159.9	145.0	39.3	316,600
Lockheed C-141B Starlifter	C-IV	129	159.9	168.3	39.3	343,000
Marshall (Shorts) Belfast	C-IV	126	158.8	136.4	47.0	230,000
MDC-DC-10-10	C-IV	136	155.3	182.3	58.4	443,000
MDC-DC-8-10	C-IV	131	142.4	150.8	43.3	276,000
MDC-DC-8-20/30/40	C-IV	133	142.4	150.8	43.3	315,000
MDC-DC-8-50	C-IV	137	142.4	150.8	43.3	325,000
MDC-DC-8-62	C-IV	124	148.4	157.5	43.4	350,000
Tupolev TU-114	C-IV	132 *	167.6	177.5	50.0	361,620
Vickers VC-10-1100	C-IV	128	146.2	158.7	39.5	312,000
Vickers VC-10-1150	C-IV	138	146.2	171.7	39.5	335,100
Boeing 707-200	D-IV	145	130.8	145.1	41.7	257,340
Boeing 777	D-IV	145	155.0	181.5	44.8	380,000

Aircraft	Airport Reference Code	Appch Speed Knots	Wingspan Feet	Length Feet	Tail Height Feet	Maximum Takeoff Lbs
General Dynamics 880	D-IV	155	120.0	129.3	36.0	193,500
General Dynamics 990	D-IV	156	120.0	139.2	39.5	255,000
Ilyushin Il-62	D-IV	152	141.8	174.3	40.5	363,760
Ilyushin Il-86	D-IV	141	157.7	195.3	51.8	454,150
Lockheed 1011-250	D-IV	144	155.3	177.7	55.8	496,000
Lockheed 1011-500	D-IV	144	155.3	164.2	55.8	496,000
Lockheed 1011-500 Ex. Wing	D-IV	148	164.3	164.2	55.8	496,000
MDC-DC-10-30	D-IV	151	165.3	181.6	58.6	590,000
MDC-DC-10-40	D-IV	145	165.4	182.3	58.6	555,000
MDC-DC-8-61	D-IV	142	142.4	187.4	43.0	325,000
MDC-DC-8-63	D-IV	147	148.4	187.4	43.0	355,000
MDC-MD-11	D-IV	155	169.8	201.3	57.8	602,500
Rockwell B-1	D-IV	165 *	137.0	147.0	34.0	477,000
Tupolev TU-154	D-IV	145	123.3	157.2	37.4	216,050
Antonov AN-22	C-V	140 *	211.0	167.0	41.2	500,000
Boeing 747-SP	C-V	140	195.7	184.8	65.8	696,000
MDC-C-133	C-V	128	179.7	157.5	48.2	300,000
Boeing 747-100	D-V	152	195.7	231.8	64.3	600,000
Boeing 747-200	D-V	152	195.7	231.8	64.7	833,000
Boeing 747-300SR	D-V	141	195.7	231.8	64.3	600,000
Boeing 747-400	D-V	154	213.0	231.8	64.3	870,000
Boeing B-52	D-V	141 *	185.0	157.6	40.8	488,000
Boeing E-4 (747-200)	D-V	152	195.7	231.8	64.7	833,000
Antonov AN-124	C-VI	124	232.0	223.0	66.2	800,000
Lockheed C-5B Galaxy	C-VI	135	222.7	247.8	65.1	837,000

* Approach speeds estimated.

Section 5. Listing Small Airplanes by Airport Reference Code (SI units)

Aircraft	Airport Reference Code	Appch Speed Knots	Wingspan Meters	Length Meters	Tail Height Meters	Maximum Takeoff Kg
Beech Baron B55	A-I	90	11.5	8.5	2.8	2,313
Beech Baron E55	A-I	88	11.5	8.8	2.8	2,404
Beech Bonanza A36	A-I	72	10.2	8.4	2.6	1,656
Beech Bonanza B36TC	A-I	75	11.5	8.4	2.6	1,746
Beech Bonanza F33A	A-I	70	10.2	8.1	2.5	1,542
Beech Bonanza V35B	A-I	70	10.2	8.0	2.0	1,542
Beech Duchess 76	A-I	76	11.6	8.8	2.9	1,769
Beech Sierra 200-B24R	A-I	70	10.0	7.8	2.5	1,247
Beech Skipper 77	A-I	63	9.1	7.3	2.1	760
Beech Sundowner 180-C23	A-I	68	10.0	7.8	2.5	1,111
Cessna-150	A-I	55	10.0	7.3	2.4	726
Cessna-177 Cardinal	A-I	64	10.8	8.3	2.6	1,134
DHC-2 Beaver	A-I	50	14.6	9.2	2.7	2,313
Embraer-820 Navajo Chief	A-I	74	12.4	10.5	4.0	3,175
Lapan XT-400	A-I	75	14.6	10.2	4.3	2,520
Learfan 2100	A-I	86	12.0	12.4	3.7	3,357
Mitsubishi Marquise MU-2N	A-I	88	11.9	12.0	4.2	5,250
Mitsubishi Solitaire MU-2P	A-I	87	11.9	10.1	3.9	4,749
Partenavia P.68B Victor	A-I	73	12.0	10.9	3.6	2,850
Piaggio P-166 Portofino	A-I	82	14.4	11.9	5.0	4,300
AJI Hustler 400	B-I	98	8.5	10.6	3.0	2,722
Beech Airliner C99	B-I	107	14.0	13.6	4.4	5,126
Beech Baron 58	B-I	96	11.5	9.1	3.0	2,495
Beech Baron 58P	B-I	101	11.5	9.1	2.8	2,812
Beech Baron 58TC	B-I	101	11.5	9.1	2.8	2,812
Beech Duke B60	B-I	98	11.9	10.3	3.7	3,073
Beech King Air B100	B-I	111	14.0	12.2	4.7	5,352
Beech King Air F90	B-I	108	14.0	12.1	4.6	4,967
Cessna Citation I	B-I	108	14.4	13.3	4.4	5,375
Cessna-402 Businessliner	B-I	95	12.1	11.0	3.5	2,858
Cessna-404 Titan	B-I	92	14.1	12.0	4.0	3,810
Cessna-414 Chancellor	B-I	94	13.4	11.1	3.5	3,078
Cessna-421 Golden Eagle	B-I	96	12.7	11.0	3.5	3,379
Embraer-121 Xingu	B-I	92	14.4	12.3	4.8	5,670
Embraer-326 Xavante	B-I	102	10.9	10.6	3.7	5,216
Foxjet ST-600-8	B-I	97	9.6	9.7	3.1	2,064
Hamilton Westwind II STD	B-I	96	14.0	13.7	2.8	5,668
Mitsubishi MU-2G	B-I	119	11.9	12.0	4.2	4,899
Piper 31-310 Navajo	B-I	100	12.4	10.0	4.0	2,812
Piper 400LS Cheyenne	B-I	110	14.5	13.2	5.2	5,466
Piper 60-602P Aerostar	B-I	94	11.2	10.6	3.7	2,722
Rockwell 690A Turbo Comdr.	B-I	97	14.2	13.5	4.5	4,672
Swearingen Merlin 3B	B-I	105	14.1	12.9	5.1	5,670
Swearingen Metro	B-I	112	14.1	18.1	5.1	5,670
Volpar Turbo 18	B-I	100	14.0	11.4	2.9	4,663
Aerocom Skyliner	A-II	88	16.5	16.6	5.0	5,670
Antonov AN-14	A-II	52	22.0	11.3	4.6	3,450
Antonov AN-28	A-II	88	22.0	13.0	4.9	5,602
Beech E18S	A-II	87	15.1	10.7	2.9	4,218

Aircraft	Airport Reference Code	Appch Speed Knots	Wingspan Meters	Length Meters	Tail Height Meters	Maximum Takeoff Kg
BN-2A Mk.3 Trislander	A-II	65	16.2	13.9	4.3	4,536
DHC-6-300 Twin Otter	A-II	75	19.8	15.8	5.9	5,670
DH.104 Dove 8	A-II	84	17.4	11.9	4.1	4,060
Dornier DO 28D-2	A-II	74	15.5	11.4	3.9	4,017
Nomad N 22B	A-II	69	16.5	12.6	5.5	4,060
Nomad N 24A	A-II	73	16.5	14.4	5.5	4,264
Pilatus PC-6 Porter	A-II	57	15.1	11.4	3.2	2,200
PZL-AN-2	A-II	54	18.2	12.8	4.0	5,500
PZL-M-15 Belphegor	A-II	62	22.4	12.8	5.4	5,654
Yunshu-11	A-II	80 *	17.0	12.0	4.6	3,243
Beech King Air C90-1	B-II	100	15.3	10.8	4.3	4,377
Beech Super King Air B200	B-II	103	16.6	13.4	4.6	5,670
Cessna-441 Conquest	B-II	100	15.0	11.9	4.0	4,502
Rockwell 840	B-II	98	15.9	13.1	4.5	4,683
Rockwell 980	C-II	121	15.9	13.1	4.5	4,683

* Approach speeds estimated.

Section 6. Listing Large Airplanes by Airport Reference Code (SI units)

Aircraft	Airport Reference Code	Appch Speed Knots	Wingspan Meters	Length Meters	Tail Height Meters	Maximum Takeoff Kg
Aerospatiale SN 601 Corv.	B-I	118	12.9	13.8	4.2	6,600
Dassault FAL-10	B-I	104	13.1	13.9	4.6	8,500
Gates Learjet 28/29	B-I	120	13.3	14.5	3.7	6,804
Mitsubishi Diamond MU-300	B-I	100	13.3	14.8	4.2	7,135
Piaggio PD-808	B-I	117	13.2	12.9	4.8	8,301
Rockwell Sabre 40	B-I	120	13.6	13.4	4.9	8,459
Rockwell Sabre 60	B-I	120	13.6	14.7	4.9	9,072
Gates Learjet 24	C-I	128	10.9	13.2	3.8	5,897
Gates Learjet 25	C-I	137	10.9	14.5	3.8	6,804
Gates Learjet 54-55-56	C-I	128	13.3	16.8	4.5	9,752
HFB-320 Hansa	C-I	125	14.5	16.6	4.9	9,199
HS 125 Series 400A	C-I	124	14.3	14.4	5.0	10,569
HS 125 Series 600A	C-I	125	14.3	15.4	5.2	11,340
HS 125 Series 700A	C-I	125	14.3	15.5	5.4	10,977
IAI 1121 Jet Comdr.	C-I	130	13.2	15.4	4.8	7,620
IAI-1124 Westwind	C-I	129	13.7	15.9	4.8	10,659
Rockwell Sabre 75A	C-I	137	13.6	14.4	5.2	10,569
Gates Learjet 35A/36A	D-I	143	12.0	14.8	3.7	8,301
Casa C-212-200 Aviocar	A-II	81	19.0	15.2	6.3	7,700
Dassault 941	A-II	59	23.4	23.7	9.4	26,490
DH.114 Heron 2	A-II	85	21.8	14.8	4.8	6,123
Dornier LTA	A-II	74 *	17.8	16.6	5.5	6,849
GAC-100	A-II	86	21.3	20.5	7.6	13,109
IAI Arava-201	A-II	81	20.9	13.0	5.2	6,804
LET L-410 UVP-E	A-II	81	20.0	14.5	5.8	6,400
PZL-AN-28	A-II	85	22.1	13.1	4.9	6,500

Aircraft	Airport Reference Code	Appch Speed Knots	Wingspan Meters	Length Meters	Tail Height Meters	Maximum Takeoff Kg
Aerospatiale NORD-262	B-II	96	21.9	19.3	6.2	10,650
Ahrens AR 404	B-II	98	20.1	16.1	5.8	8,391
Air-Metal AM-C 111	B-II	96	19.2	16.8	6.4	8,450
BAe Jetstream 31	B-II	99	15.8	14.4	5.3	6,600
Beech Airliner 1900-C	B-II	120 *	16.6	17.6	4.5	7,530
Cessna Citation II	B-II	108	15.8	14.4	4.6	6,033
Cessna Citation III	B-II	114	16.3	16.9	5.1	9,979
Dassault FAL-20	B-II	107	16.3	17.2	5.3	13,000
Dassault FAL-200	B-II	114	16.3	17.2	5.3	13,903
Dassault FAL-50	B-II	113	18.9	18.5	7.0	17,001
Dassault FAL-900	B-II	100	19.3	20.2	7.6	20,638
Embraer-110 Bandeirante	B-II	92	15.3	15.1	5.0	5,900
FMA IA-50 Guarni II	B-II	101	19.5	14.9	5.8	7,121
Fokker F-28-1000	B-II	119	23.6	27.4	8.5	29,484
Fokker F-28-2000	B-II	119	23.6	29.6	8.5	29,484
Grumman Gulfstream I	B-II	113	23.9	23.0	7.0	16,329
Rockwell Sabre 65	B-II	105	15.4	14.1	4.9	10,886
Shorts 330	B-II	96	22.8	17.7	4.9	10,387
Shorts 360	B-II	104	22.8	21.6	7.2	11,999
VFW-Fokker 614	B-II	111	21.5	20.6	7.8	19,958
Canadair CL-600	C-II	125	18.8	20.8	6.3	18,711
Grumman Gulfstream III	C-II	136	23.7	25.3	7.4	31,162
Lockheed 1329 JetStar	C-II	132	16.6	18.4	6.2	19,845
Rockwell Sabre 80	C-II	128	15.4	14.4	5.3	11,113
Grumman Gulfstream II	D-II	141	21.0	24.4	7.5	29,620
Grumman Gulfstream II-TT	D-II	142	21.9	24.4	7.5	29,620
Grumman Gulfstream IV	D-II	145	23.7	26.8	7.4	32,559
Lockheed SR-71 Blackbird	E-II	180	16.9	32.7	5.6	77,111
AIDC/CAF XC-2	A-III	86	24.9	20.1	7.7	12,474
Antonov AN-72	A-III	89 *	25.8	25.8	8.2	29,937
DHC-4 Caribou	A-III	77	29.1	22.1	9.7	12,927
DHC-7 Dash 7-100	A-III	83	28.3	24.6	8.0	19,504
DHC-8 Dash 8-300	A-III	90	27.4	25.7	7.5	18,643
Fairchild C-121	A-III	88	33.5	23.1	10.4	27,216
HP Herald	A-III	88	28.9	23.0	7.3	19,504
Ilyushin Il-12	A-III	78	31.7	21.3	9.3	17,237
MAI-QSTOL	A-III	85	30.6	30.0	10.0	38,691
MDC-DC-3	A-III	72	29.0	19.7	7.2	11,431
Aeritalia G-222	B-III	109	28.6	22.7	9.8	27,987
Antonov AN-24	B-III	119	29.2	23.5	8.3	21,004
Antonov AN-30	B-III	112	29.4	24.4	8.3	23,151
AW.660 Argosy C.Mk.1	B-III	113	35.1	27.2	8.2	43,998
BAe 146-100	B-III	113	26.3	26.2	8.6	33,838
BAe 146-200	B-III	117	26.3	28.6	8.6	40,030
Casa C-207A Azor	B-III	102	27.8	20.8	7.7	16,511
Convair 240	B-III	107	28.0	22.8	8.2	18,956
Convair 340	B-III	104	32.1	24.8	8.6	22,271
Convair 440	B-III	106	32.1	24.8	8.6	22,271
Convair 580	B-III	107	32.1	24.8	8.9	24,766
Dassault Mercure	B-III	117	30.5	34.8	11.4	56,472
DHC-5D Buffalo	B-III	91	29.3	24.1	8.7	22,317

Aircraft	Airport Reference Code	Appch Speed Knots	Wingspan Meters	Length Meters	Tail Height Meters	Maximum Takeoff Kg
DH.106 Comet 4C	B-III	108	35.1	36.0	9.0	73,482
Fairchild FH-227 B,D	B-III	105	29.0	25.3	8.4	20,638
Fairchild F-27 A,J	B-III	109	29.0	23.5	8.4	19,051
Fokker F-27-500	B-III	102	29.0	25.1	8.9	20,412
Fokker F-28-6000	B-III	113	25.1	29.6	8.5	33,112
Hindustan HS.748-2	B-III	94	30.0	20.4	7.6	20,140
HS:748 Series 2A	B-III	94	30.0	20.4	7.6	20,180
HS.780 Andover C.Mk.1	B-III	100	29.9	23.8	9.2	22,680
Kawasaki C-1	B-III	118 *	30.6	29.0	10.0	38,701
Martin-404	B-III	98	28.4	22.7	8.7	20,366
MDC-DC-4	B-III	95	35.8	28.6	8.5	33,112
MDC-DC-6A/B	B-III	108	35.8	32.2	8.9	47,174
Nihon YS-11	B-III	98	32.0	26.3	9.0	24,499
Aerospatiale SE 210 Carav.	C-III	127	34.3	32.0	8.7	52,000
Airbus A-320-100	C-III	138	33.9	37.6	11.9	66,000
Antonov AN-26	C-III	121	29.2	23.8	8.6	24,004
AW.650 Argosy 220	C-III	123	35.1	26.5	8.2	42,184
BAC 111-200	C-III	129	27.0	28.5	7.5	35,834
BAC 111-300	C-III	128	27.0	28.5	7.5	40,143
BAC 111-400	C-III	137	27.0	28.5	7.5	39,463
BAC 111-475	C-III	135	28.5	28.5	7.5	44,679
BAe 146-300	C-III	121	26.3	31.8	8.6	47,174
Boeing 727-100	C-III	125	32.9	40.6	10.5	76,657
Boeing 727-200	C-III	138	32.9	46.7	10.6	95,028
Boeing 737-100	C-III	137	28.3	28.7	11.3	49,895
Boeing 737-200	C-III	137	28.3	30.5	11.4	52,390
Boeing 737-300	C-III	137	28.9	33.4	11.2	61,235
Boeing 737-400	C-III	139	28.9	36.5	11.2	68,039
Boeing 737-500	C-III	140 *	28.9	31.0	11.2	60,555
Fairchild C-119	C-III	122	33.3	26.4	8.4	34,927
Fokker F-28-3000	C-III	121	25.1	27.4	8.5	33,112
Fokker F-28-4000	C-III	121	25.1	29.6	8.5	33,112
HS.121 Trident 1E	C-III	137	29.0	35.0	8.2	61,462
HS.121 Trident 2E	C-III	138	29.9	35.0	8.2	65,317
HS.801 Nimrod MR Mk.2	C-III	125 *	35.0	38.6	9.1	80,513
Lockheed 188 Electra	C-III	123	30.2	31.9	10.3	52,617
Lockheed P-3 Orion	C-III	134	30.4	35.6	10.3	61,235
MDC-DC-9-10/15	C-III	134	27.2	31.8	8.4	41,141
MDC-DC-9-20	C-III	124	28.4	31.8	8.4	44,452
MDC-DC-9-30	C-III	127	28.4	36.4	8.5	49,895
MDC-DC-9-40	C-III	129	28.4	38.3	8.7	51,710
MDC-DC-9-50	C-III	132	28.4	40.7	8.8	54,885
MDC-DC-9-80	C-III	132	32.9	45.0	9.2	63,503
MDC-DC-9-82	C-III	135	32.9	45.0	9.2	67,812
Tupolev TU-124	C-III	132 *	25.5	30.6	15.2	36,506
Vickers VC-2-810/840	C-III	122	28.7	26.1	8.2	32,885
Yakovlev YAK-40	C-III	128 *	25.1	20.1	6.5	16,000
Yakovlev YAK-42	C-III	128 *	34.2	36.4	9.8	53,501
BAC 111-500	D-III	144	28.5	32.6	7.5	47,400
BAC/Aerospatiale Concord	D-III	162	25.5	62.6	11.4	185,066
HS.121 Trident 3B	D-III	143	29.9	40.0	8.6	68,039

Aircraft	Airport Reference Code	Appch Speed Knots	Wingspan Meters	Length Meters	Tail Height Meters	Maximum Takeoff Kg
HS.121 Trident Super 3B	D-III	146	29.9	40.0	8.6	71,668
Tupolev TU-134	D-III	144	29.0	37.0	9.1	46,992
Tupolev TU-144	E-III	178	28.9	64.8	12.9	179,623
Boeing YC-14	A-IV	89	39.3	40.1	14.7	97,976
Lockheed 1649 Constellat'n	A-IV	89	45.7	35.4	7.1	72,575
Boeing C97 Stratocruiser	B-IV	105	43.1	33.6	11.7	66,134
Bristol Brittania 300/310	B-IV	117	43.4	37.9	11.4	83,915
Ilyushin Il-18	B-IV	103	37.4	35.9	10.1	61,072
Ilyushin Il-76	B-IV	119	50.5	46.6	14.8	170,000
Lockheed 1049 Constellat'n	B-IV	113	37.5	34.6	7.6	62,369
Lockheed 749 Constellat'n	B-IV	93	37.5	29.0	6.8	48,534
MDC-DC-7	B-IV	110	38.9	34.2	9.7	64,864
Vickers Vanguard 950	B-IV	119	36.0	37.5	10.6	66,451
Aerospatiale C 160 Trans.	C-IV	124	40.0	32.4	11.8	49,258
Airbus A-300-600	C-IV	135	44.8	54.1	16.7	165,000
Airbus A-300-B4	C-IV	132	44.8	53.5	16.9	150,003
Airbus A-310-300	C-IV	125	43.9	46.7	15.9	150,000
Antonov AN-10	C-IV	126	38.0	37.0	9.8	55,111
Antonov AN-12	C-IV	127	38.0	33.2	10.5	55,111
Boeing 707-100	C-IV	139	39.9	44.2	12.7	116,727
Boeing 707-320	C-IV	139	43.4	46.6	12.9	141,521
Boeing 707-320B	C-IV	136	44.4	46.6	12.8	152,679
Boeing 707-420	C-IV	132	43.4	46.6	12.9	141,521
Boeing 720	C-IV	133	39.9	41.5	12.6	104,009
Boeing 720B	C-IV	137	39.9	41.7	12.6	106,277
Boeing 757	C-IV	135	38.0	47.3	13.7	115,666
Boeing 767-200	C-IV	130	47.6	48.5	16.1	142,882
Boeing 767-300	C-IV	130	47.6	55.0	16.0	158,757
Boeing E-3	C-IV	137	44.5	46.6	12.8	147,418
Canadair CL-44	C-IV	123	43.4	41.7	11.7	95,254
Dassault 1150 Atlantic	C-IV	130 *	37.4	31.8	11.3	45,359
Lockheed 100-20 Hercules	C-IV	137	40.4	32.3	12.0	70,307
Lockheed 100-30 Hercules	C-IV	129	40.4	34.4	11.9	70,307
Lockheed 1011-1	C-IV	138	47.3	54.2	17.0	195,045
Lockheed 1011-100	C-IV	140	47.3	54.2	17.0	211,374
Lockheed 1011-200	C-IV	140	47.3	54.2	17.0	211,374
Lockheed 1011-600	C-IV	140 *	43.5	43.0	16.2	119,748
Lockheed 400	C-IV	121 *	36.5	29.8	11.6	38,102
Lockheed C-141A Starlifter	C-IV	129	48.7	44.2	12.0	143,607
Lockheed C-141B Starlifter	C-IV	129	48.7	51.3	12.0	155,582
Marshall (Shorts) Belfast	C-IV	126	48.4	41.6	14.3	104,326
MDC-DC-10-10	C-IV	136	47.3	55.6	17.8	200,941
MDC-DC-8-10	C-IV	131	43.4	46.0	13.2	125,191
MDC-DC-8-20/30/40	C-IV	133	43.4	46.0	13.2	142,882
MDC-DC-8-50	C-IV	137	43.4	46.0	13.2	147,418
MDC-DC-8-62	C-IV	124	45.2	48.0	13.2	158,757
Tupolev TU-114	C-IV	132 *	51.1	54.1	15.2	164,028
Vickers VC-10-1100	C-IV	128	44.6	48.4	12.0	141,521
Vickers VC-10-1150	C-IV	138	44.6	52.3	12.0	151,999
Boeing 707-200	D-IV	145	39.9	44.2	12.7	116,727
Boeing 777	D-IV	145	47.2	55.3	13.7	172,365

Aircraft	Airport Reference Code	Appch Speed Knots	Wingspan Meters	Length Meters	Tail Height Meters	Maximum Takeoff Kg
General Dynamics 880	D-IV	155	36.6	39.4	11.0	87,770
General Dynamics 990	D-IV	156	36.6	42.4	12.0	115,666
Ilyushin Il-62	D-IV	152	43.2	53.1	12.3	164,999
Ilyushin Il-86	D-IV	141	48.1	59.5	15.8	205,999
Lockheed 1011-250	D-IV	144	47.3	54.2	17.0	224,982
Lockheed 1011-500	D-IV	144	47.3	50.0	17.0	224,982
Lockheed 1011-500 Ex. Wing	D-IV	148	50.1	50.0	17.0	224,982
MDC-DC-10-30	D-IV	151	50.4	55.4	17.9	267,619
MDC-DC-10-40	D-IV	145	50.4	55.6	17.9	251,744
MDC-DC-8-61	D-IV	142	43.4	57.1	13.1	147,418
MDC-DC-8-63	D-IV	147	45.2	57.1	13.1	161,025
MDC-MD-11	D-IV	155	51.8	61.4	17.6	273,289
Rockwell B-1	D-IV	165 *	41.8	44.8	10.4	216,364
Tupolev TU-154	D-IV	145	37.6	47.9	11.4	97,999
Antonov AN-22	C-V	140 *	64.3	50.9	12.6	226,796
Boeing 747-SP	C-V	140	59.6	56.3	20.1	315,700
MDC-C-133	C-V	128	54.8	48.0	14.7	136,078
Boeing 747-100	D-V	152	59.6	70.7	19.6	272,155
Boeing 747-200	D-V	152	59.6	70.7	19.7	377,842
Boeing 747-300SR	D-V	141	59.6	70.7	19.6	272,155
Boeing 747-400	D-V	154	64.9	70.7	19.6	394,625
Boeing B-52	D-V	141 *	56.4	48.0	12.4	221,353
Boeing E-4 (747-200)	D-V	152	59.6	70.7	19.7	377,842
Antonov AN-124	C-VI	124	70.7	68.0	20.2	362,874
Lockheed C-5B Galaxy	C-VI	135	67.9	75.5	19.8	379,657

* Approach speeds estimated.

Appendix 14. DECLARED DISTANCES

1. APPLICATION. The use of declared distances for airport design shall be limited to cases of existing constrained airports where it is impracticable to provide the runway safety area (RSA), the runway object free area (ROFA), or the runway protection zone (RPZ) in accordance with the design standards in chapters 2 and 3.

a. This appendix, by treating the airplane's runway performance distances independently, provides an alternative airport design methodology by declaring distances to satisfy the airplane's takeoff run, takeoff distance, accelerate-stop distance, and landing distance requirements. The declared distances are takeoff run available (TORA), takeoff distance available (TODA), accelerate-stop distance available (ASDA), and landing distance available (LDA) which when treated independently may include clearway and stopway and may limit runway use. This alternative design methodology may affect the beginning and ending of the RSA, ROFA, RPZ, and primary surface.

b. Where declared distances differ, the primary surface extends 200 feet (60 m) beyond each end of the runway or the far end of each TODA whichever is further to protect departures to the extent of the 14 CFR Part 77 approach surface for that runway end i.e. 20:1, 34:1, and 50:1 originating at or beyond the end of TODA.

2. BACKGROUND. In applying declared distances in airport design, it is helpful to understand the relationship between airplane certification, aircraft operating rules, airport data, and airport design.

a. Airplane certification provides the airplane's performance distances. The performance speeds, e.g., V_1, takeoff decision speed, V_{LOF}, lift-off speed, V_2, takeoff safety speed, V_{SO}, stalling speed or the minimum steady flight speed in the landing configuration, and the following distances to achieve or decelerate from these speeds are established by the manufacturer and confirmed during certification testing for varying climatological conditions, operating weights, etc.

(1) Takeoff run - the distance to accelerate from brake release to lift-off, plus safety factors.

(2) Takeoff distance - the distance to accelerate from brake release past lift-off to start of takeoff climb, plus safety factors.

(3) Accelerate-stop distance - the distance to accelerate from brake release to V_1 and then decelerate to a stop, plus safety factors.

(4) Landing distance - the distance from the threshold to complete the approach, touchdown, and decelerate to a stop, plus safety factors.

b. Aircraft operating rules provide a minimum acceptable level of safety by controlling the airplane maximum operating weights by limiting the airplane's performance distances as follows:

(1) Takeoff run shall not exceed the length of runway.

(2) Takeoff distance shall not exceed the length of runway plus clearway.

(3) Accelerate-stop distance shall not exceed the length of runway plus stopway.

(4) Landing distance shall not exceed the length of runway.

c. Airport data provides the runway length and/or the following declared distance information for calculating maximum operating weights and/or operating capability.

(1) Takeoff run available (TORA) - the length of runway declared available and suitable for satisfying takeoff run requirements.

(2) Takeoff distance available (TODA) - the TORA plus the length of any remaining runway or clearway beyond the far end of the TORA available for satisfying takeoff distance requirements. The usable TODA length is controlled by obstacles present in the departure area vis-a-vis aircraft performance. As such, the usable TODA length is determined by the aircraft operator before each takeoff and requires knowledge of the location of each controlling obstacle in the departure area. Extending the usable TODA lengths requires the removal of existing objects limiting the usable TODA lengths.

(3) Accelerate-stop distance available (ASDA) - the length of runway plus stopway declared available and suitable for satisfying accelerate-stop distance requirements.

(4) Landing distance available (LDA) - the length of runway declared available and suitable for satisfying landing distance requirements.

3. FAA APPROVAL FOR APPLYING DECLARED DISTANCES IN AIRPORT DESIGN. The application of declared distances at a specific location requires prior FAA approval on a case-by-case basis. Approval is reflected on the FAA-approved Airport Layout Plan.

4. RUNWAY SAFETY AREA (RSA) AND RUNWAY OBJECT FREE AREA (ROFA) LENGTHS. The standard RSA length P in the following paragraphs is the length specified in tables 3-1, 3-2, and 3-3 for the RSA length beyond the runway ends. The standard ROFA length R in the following paragraphs is the length specified in tables 3-1, 3-2, and 3-3 for the ROFA length beyond the runway ends. The RSA and the ROFA shall extend for the full length of the runway plus the greater of the following lengths beyond the runway ends for takeoff and landing in both directions.

a. For takeoff.

(1) At the start of takeoff end of runway. The RSA and the ROFA need to extend behind the start of takeoff to continue the entrance taxiway safety area and taxiway object free area and/or provide an area for jet blast protection. The portion of runway behind the start of takeoff is unavailable and/or unsuitable for takeoff run, takeoff distance, and accelerate-stop distance computations.

(2) At the far end of runway with stopway. The RSA shall extend P and the ROFA shall extend R beyond the far end of stopway.

(3) At the far end of runway without stopway. The RSA shall extend P and the ROFA shall extend R beyond the far end of ASDA. The portion of runway beyond the ASDA is unavailable and/or unsuitable for accelerate-stop distance computations.

b. For landing.

(1) At the approach end of runway. The RSA shall extend P and the ROFA shall extend R before the threshold. The portion of runway behind the threshold is unavailable and/or unsuitable for landing distance computations.

(2) At the rollout end of runway. The RSA shall extend P and the ROFA shall extend R beyond the rollout end of LDA. The portion of runway beyond the LDA is unavailable and/or unsuitable for landing distance computations.

5. RUNWAY PROTECTION ZONE (RPZ) LOCATION AND SIZE. The RPZ function may be fulfilled by the RPZ beginning at a location other than 200 feet (60 m) beyond the end of the runway. When an RPZ begins at a location other than 200 feet (60 m) beyond the end of runway, two RPZs are required, i.e, a departure RPZ and an approach RPZ. The two RPZs normally overlap.

a. Approach RPZ. The approach RPZ shall begin 200 feet (60 m) before the threshold. Table 2-4 contains standard dimensions for approach RPZs. The portion of runway behind the threshold is unavailable and/or unsuitable for landing distance computations.

b. Departure RPZ. The departure RPZ shall begin 200 feet (60 m) beyond the far end of TORA. The portion of runway beyond the TORA is unavailable and/or unsuitable for takeoff run computations. The standard dimensions for departure RPZs are:

(1) Starting 200 feet (60 m) beyond the far end of TORA, 1,000 feet (300 m) long, 250 feet (75 m) wide, and at the far end of RPZ 450 feet (135 m) wide--for runways serving only small airplanes in Aircraft Approach Categories A and B.

(2) Starting 200 feet (60 m) beyond the far end of TORA, 1,000 feet (300 m) long, 500 feet (150 m) wide, and at the far end of RPZ 700 feet (210 m) wide--for runways serving large airplanes in Aircraft Approach Categories A and B.

(3) Starting 200 feet (60 m) beyond the far end of TORA, 1,700 feet (510 m) long, 500 feet (150 m) wide, and at the far end of RPZ 1,010 feet (303 m) wide--for runways serving Aircraft Approach Categories C and D.

6. CLEARWAY LOCATION. The clearway is located at the far end of TORA. The portion of runway extending into the clearway is unavailable and\or unsuitable for takeoff run and takeoff distance computations.

7. NOTIFICATION. The clearway and stopway lengths and the following declared distances shall be provided in the Airport/Facility Directory (and in the Aeronautical Information Publication (AIP), for international airports) for each operational direction:

a. The TORA -- the length of the runway less any length of runway unavailable and/or unsuitable for takeoff run computations. See figure A14-1.

b. The TODA -- the TORA plus the length of any remaining runway and/or clearway beyond the far end of the TORA. See figure A14-2.

c. The ASDA -- the length of the runway plus the length of any stopway beyond the far end of the runway less any length of runway and/or stopway unavailable and/or unsuitable for accelerate-stop distance computations. See figure A14-3.

d. The LDA -- the length of the runway less any length of runway unavailable and/or unsuitable for landing distance computations. See figure A14-4. **Note:** When the threshold is sited for small airplanes (see appendix 2, paragraphs 5a and 5b), report LDA as "LDA for airplanes of 12,500 pounds (5 700 kg) or less maximum certificated takeoff weight."

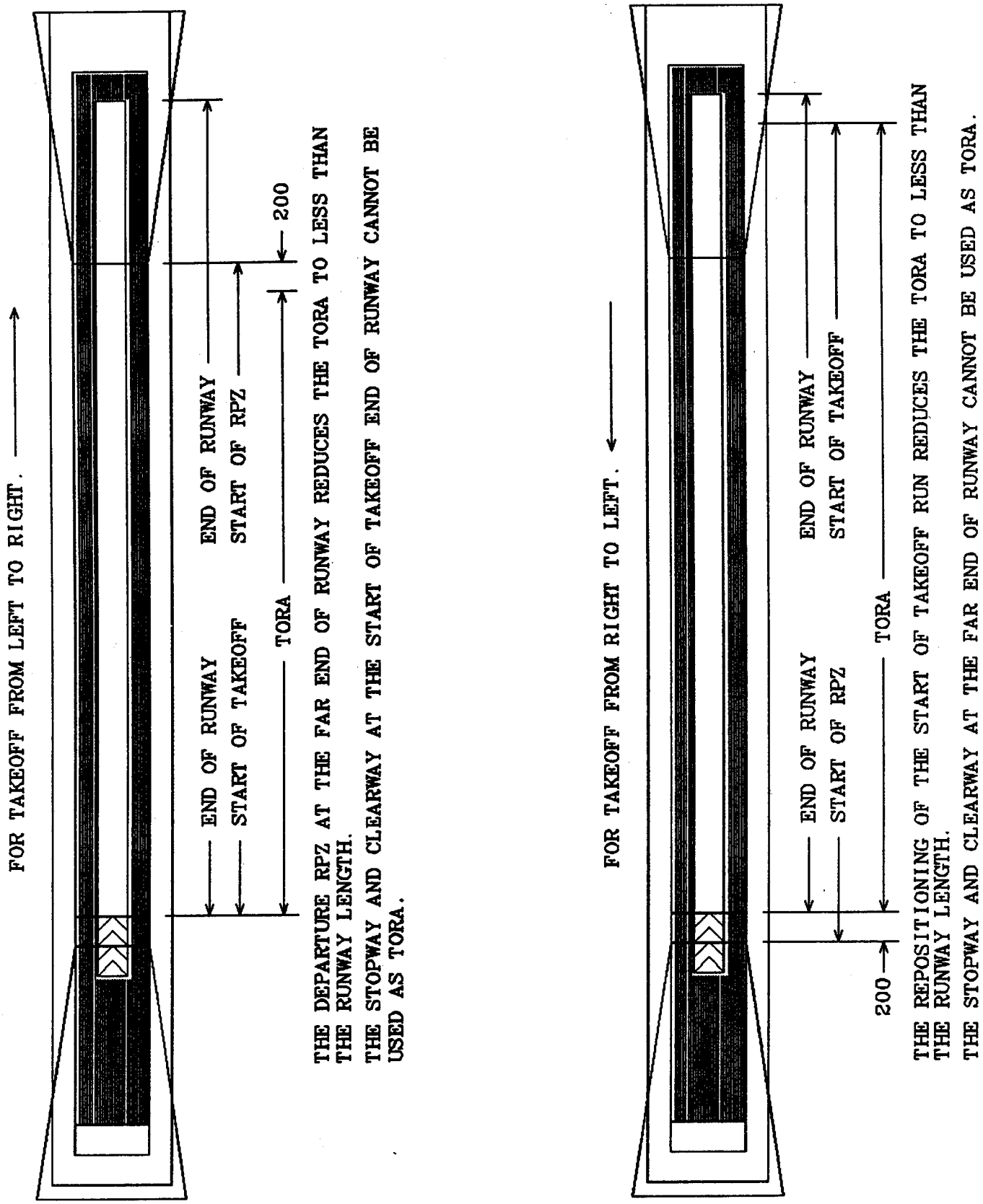

Figure A14-1. Takeoff run available (TORA)

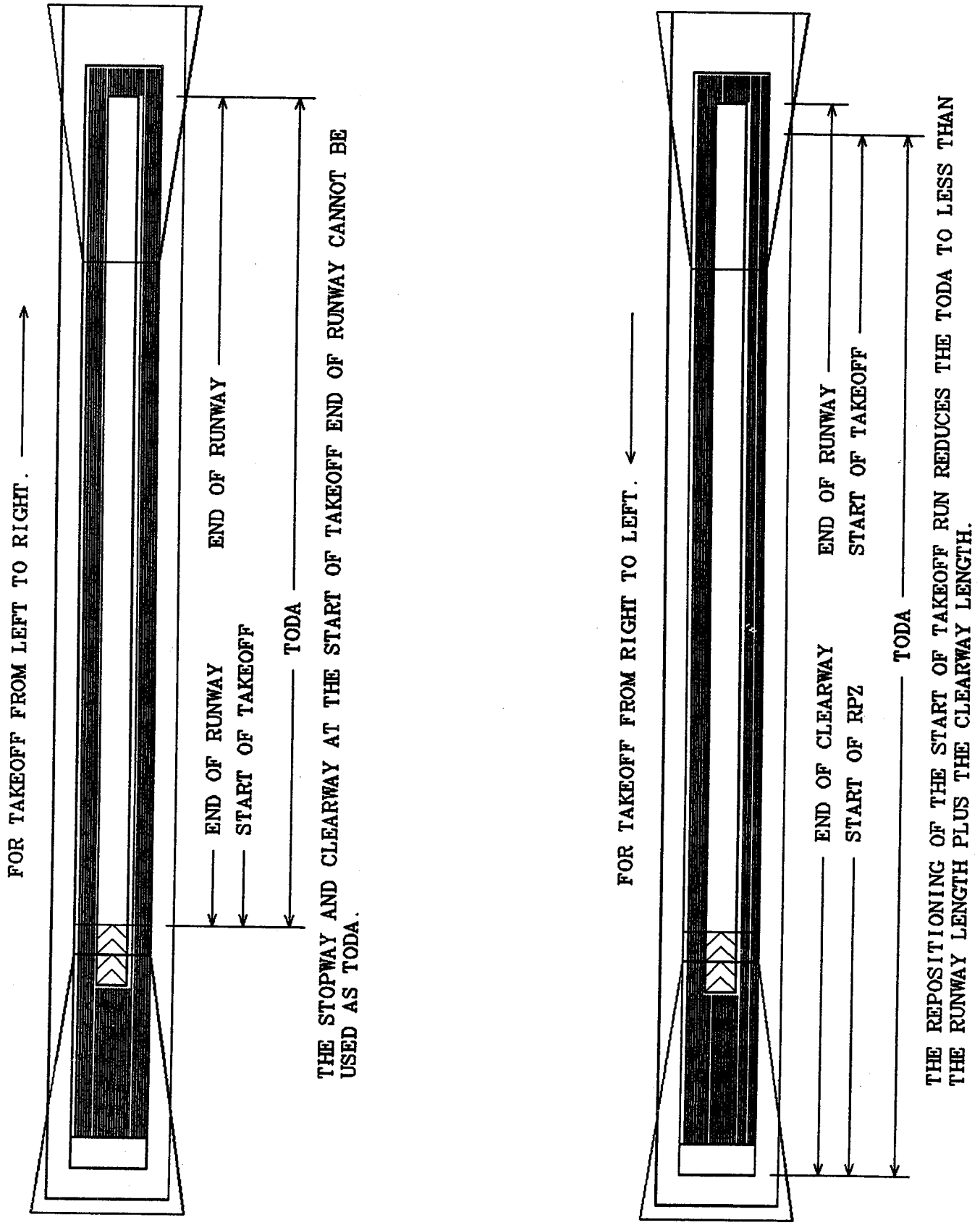

Figure A14-2. Takeoff distance available (TODA)

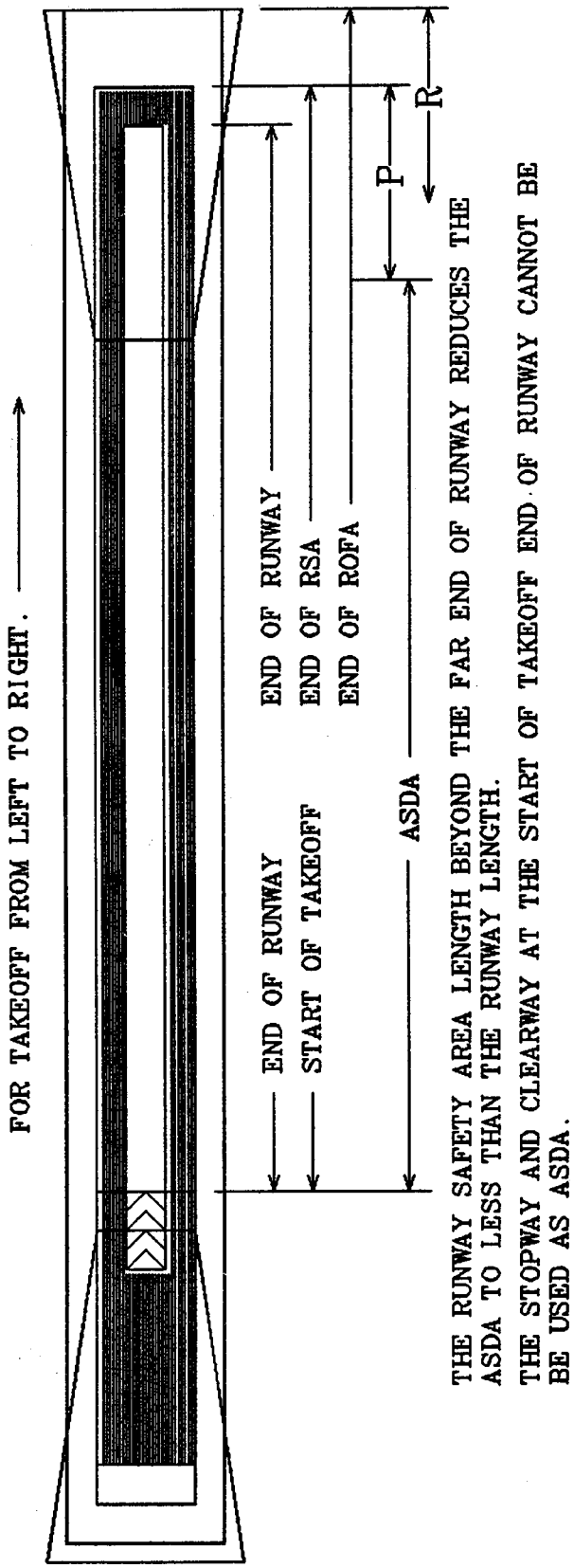

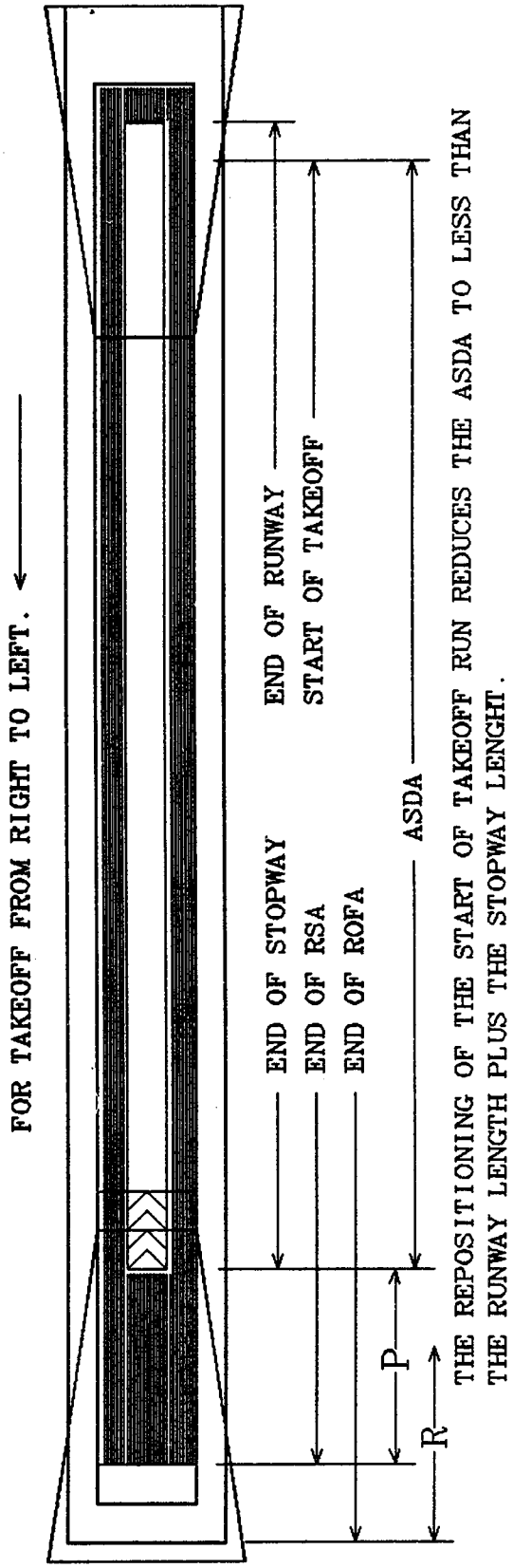

Figure A14-3. Accelerate-stop distance available (ASDA)

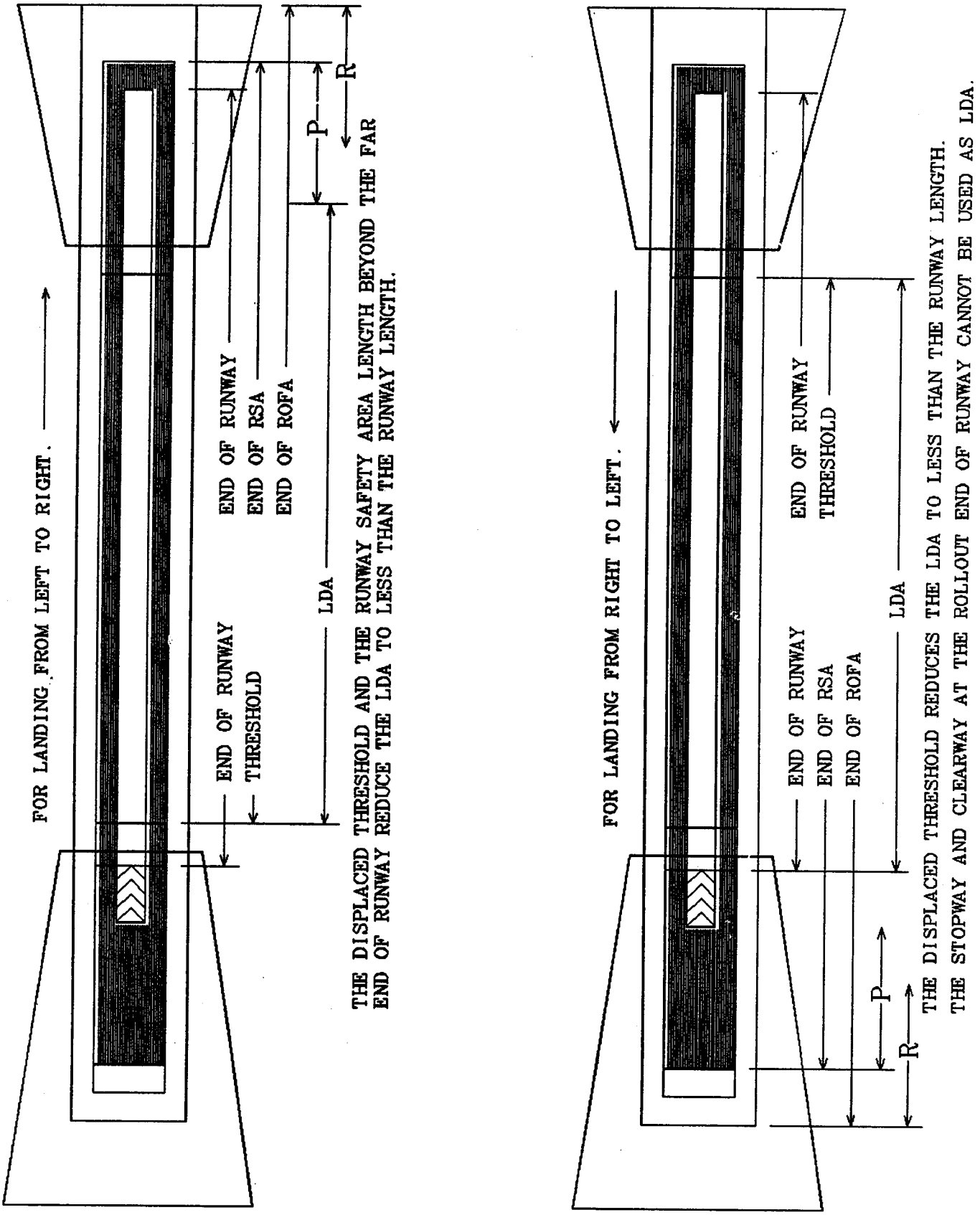

Figure A14-4. Landing distance available (LDA)

Example:

The following situation is for a runway which is to be extended to 7000 feet. The threshold at the 9 end is displaced 420 feet for obstructions in the approach. The runway safety area at the 27 end can only be extended to 375 feet beyond the runway end. By entering the following airport data into the Airport Design (for microcomputers) program, we find that the runway safety area at the Runway 27 end is 625 feet less than standard.

AIRPORT DESIGN AIRPLANE AND RUNWAY DATA

Aircraft Approach Categories C and D
Airplane Design Group III
Precision Instrument Runway

Runway 9/27 length	7000 feet
Stopway length at the far end of Runway 9	0 feet
Stopway length at the far end of Runway 27	0 feet
Clearway length at the far end of Runway 9	375 feet
Clearway length at the far end of Runway 27	0 feet
Runway safety area length beyond the far end of Runway 9	375 feet
Runway safety area length beyond the far end of Runway 27	1000 feet
Object free area length beyond the far end of Runway 9	375 feet
Object free area length beyond the far end of Runway 27	1000 feet
Distance from approach end of Runway 9 to the threshold	420 feet
Distance from approach end of Runway 27 to the threshold	0 feet
Distance from start end of Runway 9 to the start of takeoff	0 feet
Distance from start end of Runway 27 to the start of takeoff	0 feet
Distance from far end of Runway 9 to the start of clearway	0 feet
Distance from far end of Runway 27 to the start of clearway	0 feet
Distance from far end of Runway 9 to the start of departure RPZ	200 feet
Distance from far end of Runway 27 to the start of departure RPZ	200 feet

DECLARED DISTANCES

	Runway 9 (feet)	Runway 27 (feet)
Takeoff run available (TORA)	7000	7000
Takeoff distance available (TODA)	7375	7000
Accelerate-stop distance available (ASDA)	6375	7000
Landing distance available (LDA)	5955	7000

The runway safety area before RW 27 threshold is 625 feet less than standard.
The object free area before RW 27 threshold is 625 feet less than standard.

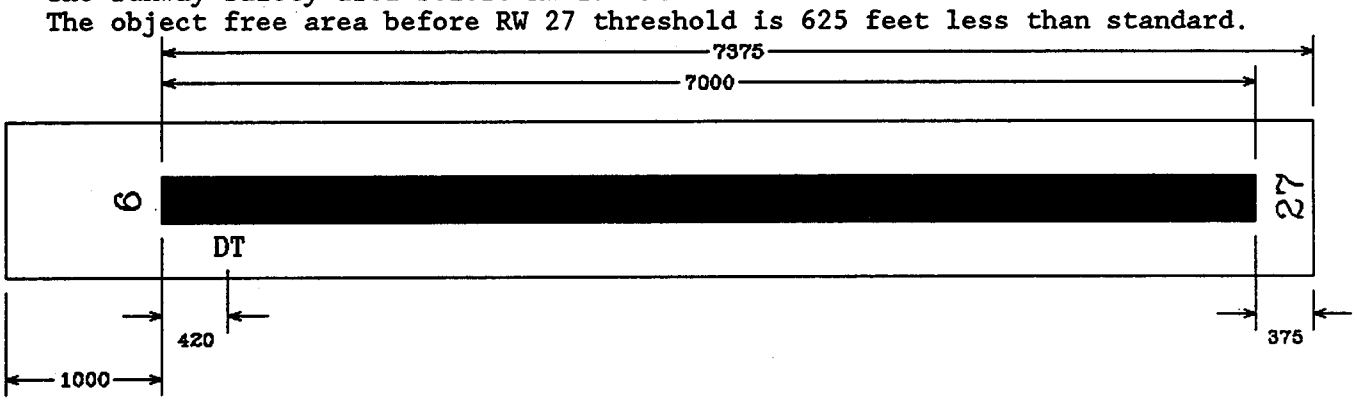

By displacing the threshold at the 27 end 625 feet and providing declared distances, the runway safety area length and runway object free area length standards can be satisfied. See figure A14-6.

Figure A14-5. Example of a runway extended to 7000 feet

AIRPORT DESIGN AIRPLANE AND RUNWAY DATA

Aircraft Approach Categories C and D
Airplane Design Group III
Precision Instrument Runway

Runway 9/27 length	7000 feet
Stopway length at the far end of Runway 9	0 feet
Stopway length at the far end of Runway 27	0 feet
Clearway length at the far end of Runway 9	375 feet
Clearway length at the far end of Runway 27	0 feet
Runway safety area length beyond the far end of Runway 9	375 feet
Runway safety area length beyond the far end of Runway 27	1000 feet
Object free area length beyond the far end of Runway 9	375 feet
Object free area length beyond the far end of Runway 27	1000 feet
Distance from approach end of Runway 9 to the threshold	420 feet
Distance from approach end of Runway 27 to the threshold	625 feet
Distance from start end of Runway 9 to the start of takeoff	0 feet
Distance from start end of Runway 27 to the start of takeoff	0 feet
Distance from far end of Runway 9 to the start of clearway	0 feet
Distance from far end of Runway 27 to the start of clearway	0 feet
Distance from far end of Runway 9 to the start of departure RPZ	200 feet
Distance from far end of Runway 27 to the start of departure RPZ	200 feet

DECLARED DISTANCES

	Runway 9 (feet)	Runway 27 (feet)
Takeoff run available (TORA)	7000	7000
Takeoff distance available (TODA)	7375	7000
Accelerate-stop distance available (ASDA)	6375	7000
Landing distance available (LDA)	5955	6375

RSA length limits RW 9 ASDA
ROFA length limits RW 9 ASDA
RSA length limits RW 9 LDA
ROFA length limits RW 9 LDA

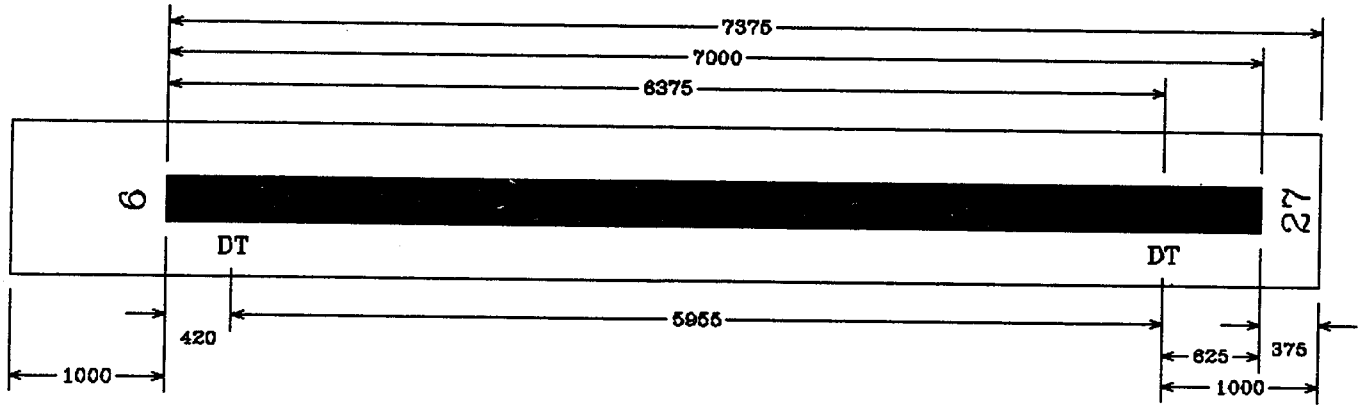

Figure A14-6. Example of a runway with threshold displaced for runway safety area

Appendix 15. TRANSFER OF ELECTRONIC DATA

1. **INTRODUCTION**. This appendix provides guidance for the preparation of Computer Aided Design and Drafting (CADD) drawings, databases, and photogrammetric data electronic files for electronic data transfer between the FAA, airport sponsors, and consultants. The objective of this guidance is to establish software-independent standards to encourage an open and free exchange of airport design related data without undue burden on airport sponsors or consultants. Reference to proprietary products is for information only and should not be considered as an endorsement or an intent to create a de facto standard.

2. **BACKGROUND**. Electronic data is used by the FAA, airport sponsors, and airport consultants for conducting airspace reviews, for developing Airport Layout Plans (ALPs), and for other airport data recording activities.

a. This data should be entered only once. Once entered, it should be reusable for multiple applications. Reasons historically advanced for reentering data include:

(1) **Inaccessibility**. *We don't have the data in our data bases. We can't get it in the right format for entry into our data base by scanning.* Most data in FAA, airport sponsors, and airport consultants data bases is or can be made available. Contact the sources.

(2) **Insufficient Deliverable Information**. *We can't read the data files. We don't have sufficient descriptive information for using the files.* Paragraph 9 provides guidance on the information about the deliverables, medium, and data files that should accompany the deliverables. Provide this information with each deliverable.

(3) **Nonstandard Features and Objects Code**. *We can't merge the data into our data base. The features and objects codes are incompatible.* Paragraph 8 provides the FAA standard code. It should be used to the extent practicable.

(4) **Untranslatable Entities**. *We can't translate the files. We lost most of the data in transition.* Paragraph 5 provides guidance on Autodesk AutoCAD DXF and Intergraph IGDS/MicroStation entities that traditionally have not translated well. Avoid these entities to the extent practicable.

b. The FAA obtains data from various sources and stores the data in a neutral database for FAA use and electronic transfer. Airport sponsors and consultants normally obtain and transfer electronic data in DXF or IGDS/MicroStation CADD files. The limitations in translation from one CADD format to another CADD format and from a CADD format to a neutral format, have restricted the useful data that could have been transferred between the FAA, airport sponsors, and consultants.

c. Successful transfer of data requires that the data format be acceptable for the recipient's use. To be able to use data provided by airport sponsors and consultants, the FAA has developed capability to translate DXF files to a database format and a limited capability with IGDS/MicroStation files. To be imported successfully into database, the data must be provided in a real coordinate system, both horizontal and vertical.

d. Translators available within the FAA will accept files in the DXF, the IGDS/MicroStation, or a format translatable to a database file format. Further, the FAA will provide this stored data to airport sponsors and consultants.

3. **DEFINITIONS**. As used in this publication:

a. The "classic" Airport Layout Plan (ALP) is the drawing on paper or vellum of an airport showing the layout of existing and proposed airport facilities. This drawing will have approval signatures affixed in the legend.

b. The "modern" Airport Layout Plan (ALP) is the electronic database of an airport containing the geographical data of existing and proposed airport facilities which can be analyzed with standard database routines, retrieved into reports, and displayed graphically to show the layout of existing and proposed airport facilities. This data base does not reflect approval signatures.

c. The "classic" satisfies the ALP approval and record keeping processes but not the requirements for electronic data transfer. To achieve satisfactory electronic data transfer we must go "modern".

4. **APPLICATION**. The FAA recognizes the use of CADD systems within the aviation community and the need for data transfer utilizing these systems.

a. Further, the FAA desires to promote on-going data transfer with airport sponsors and consultants.

This AC, while not representing mandatory requirements, offers guidelines to facilitate the translation, conversion, and transfer of data.

b. To better manipulate the data, the FAA requests, except possibly for construction drawings, that the information be submitted in a set of files. The FAA uses this set of files to categorize data and facilitate data input into a database or drawing file for conversion into a database. The following are the recommended categories for the sets of files:

(1) Ground features and objects;

(2) Above-ground features and objects;

(3) Treetops;

(4) Contours;

(5) Control points;

(6) Text; and

(7) Listing.

5. CADD FILE DELIVERABLES. Drawings created in AutoCAD DXF and Intergraph IGDS/MicroStation can be converted as outlined below. This includes any symbols or standards that are required for the project. To reduce problems in translation, airport sponsors and consultants can prepare a sample typical file and either check or have the potential recipient of the deliverables check for translation interface problems. If checked by the FAA, feasible alternatives to eliminate the problems will be suggested.

a. DXF Format (AutoCAD). DXF drawings can be translated to a database format with FAA developed translation software. Since AutoCAD is the dominant software which uses DXF format, the following information is provided for users of AutoCAD.

(1) AutoCAD Version 12. The translation software owned by the FAA accepts AutoCAD Version 12 and below.

(2) Entities to avoid. Avoid the following entities since they traditionally have not translated well:

(a) Doughnuts, Solids, and Tracers;

(b) Shapes;

(c) Text Justifications of A (align), F (fit), and M (middle);

(d) Plines;

(e) Point entities;

(f) Custom Fonts; and

(g) Special characters such as %%d, &&p, %%c, and %%%.

(3) Significant Digits. If DXFOUT is used, select 6 decimal places.

(4) Layers. FAA has the capability to map AutoCAD layers. However, the FAA translation software is limited to layer number 1 through 249. FAA desires to receive the data categorized by layers to facilitate the conversion. Paragraph 8 provides a list of element categories used to differentiate the information by relating the features or objects with a number and a description. The number can be referenced to a layer number and the description to a layer name if so used by the provider.

(5) Line Weights. The provider should assign the line weights to the AutoCAD drawings at plot time based on the AutoCAD color attribute. FAA requests that the provider put together a standard for color to pen assignment for submission to the FAA one time prior to the first delivery and adhere to this standard.

(6) Text. Only two text fonts can be used.

(a) Font TXT with Style TXT.

(b) Font SIMPLEX with STYLE SIMPLEX.

When text entities are entered, only baseline justification (left, center, and right) should be used. Aligned text (A), Fitted (F), or Middle text (M) should not be used. These justifications cause translation problems.

(7) Dimensions. In order to conform to translation dimensioning requirements, the provider should set the following dimensioning variables as shown:

(a) DIMTAD to ON;

(b) DINTIH to OFF;

(c) DIMTOH to OFF;

(d) DINBLK to NONE; and

(e) DIMTSZ to appropriate size of tick mark.

(8) Nested Blocks and XREF Files. The following items do not translate well; therefore, the consultants should do the following:

(a) Nested blocks should not be used.

(b) External reference files (XREF) are output to the DXF file by AutoCad as special blocks. If XREFs are used, special attention is required to XREFed files to avoid nested blocks. XREF files should be made a permanent part of the drawing file with XREF BIND, prior to exporting the file to DXF. An alternative would be to detach the XREF file, attach the file as a standard block and explode the newly attached block.

(c) All drawings should be created using model space.

(9) Filename. The provider must submit with each electronic deliverable an index relating filenames to actual drawing numbers.

(10) Translation Setup Checklist. The following actions are required before delivery:

(a) Remove all construction entities/layers and other unnecessary data from the drawing file (PURGE command).

(b) Produce file/layer naming index.

b. IGDS (Intergraph including MicroStation). The following is recommended for organizing Intergraph IGDS or MicroStation drawings for proper translation.

(1) Entities to avoid. Avoid the following entities since they traditionally have not translated well:

(a) Symbols. These are entities which are entered as a single text character with special IGDS fonts 85 through 126. Because these are stored simply as text in the IGDS file, they translate only as text. The provider should instead use cells in all cases where symbols might otherwise be used.

(b) Infinite Lines. Most translation does not support infinite lines. Use normal fixed-length line segments.

(c) Stacked Fractions.

(d) Custom Line Fonts.

(2) Coordinate Setup. Intergraph uses an integer-based method of string coordinate data based on user-defined "Working Units" or "units of resolution". This limits the range of X and Y coordinates which can be stored in the "Design Plane". The provider must define the Master and Sub Unit readouts to FT (') for Master, and IN (") for Sub Units, as appropriate. Unless these readouts and the Working Units are correctly defined, translation software cannot determine the true X Y coordinates representation.

(3) Standard Symbols. All of the standard symbols that appear in the IGDS drawings should be created and inserted as Cells.

(4) Text. The provider should only use "Font 50" font.

(5) Dimensions. Since IGDS stores Dimensions as a text and lines, translation of IGDS Dimensions will not be a problem. The provider can simply select from the menu the appropriate IGDS dimensioning commands which produce the AEC dimensioning with oblique strokes (tick marks).

(6) Filename. The provider must submit with each electronic deliverable an index relating filenames to actual drawing numbers.

(7) Reference Files. Most translation software does not support the concept of reference files. All reference files should be merged into the design file prior to submission. This can be accomplish by the following command sequence.

(a) Turn OFF all levels of the design file.

(b) Turn Locate ON for all reference files.

(c) Place CLIP fence around reference files.

(d) COPY fence into design file with zero displacement.

(e) DETACH all reference files.

(f) Turn ON all levels of the design file.

(8) Complex Elements. Complex elements 2, 7, 12, and 14 do not translate consistently. Drop these elements.

c. Application Programs. If the provider chooses to use any special application program, it is recommended that the program be customized to conform to the above translation guidelines. If the application program does not permit customization, the provider will have to review the Layers, Colors, Line Weights, and Text Styles/Fonts that the application program uses and develop a mapping strategy to produce database files. The provider will also need to check that the application program does not use any of the problem entities listed in "Entities to avoid" subsection above.

6. DATABASES DELIVERABLES. FAA can accept database information in ASCII format with a separator character between each field within each record. Any record length can be accepted as long as it is stated on the media and the record structures with field definitions are provided as part of the deliverables.

7. PHOTOGRAMMETRY DELIVERABLES. Electronic deliverables from a photogrammetric survey comprise a set of files depicting the geographical outlines, features, and objects of the photographed areas. These files are to present the raw information in a descriptive manner, ASCII format, in lieu of drawing-type binary data. To differentiate between life-cycle state of the data, such as "existing" or "proposed," the data should be provided in separate file sets and so noted. If separate file sets are not feasible, linetype and/or symbol designators should be specifically assigned for the life-cycle state and so noted in the listing file."

a. Subject to survey requirements, the recommended set of files is as follows:

(1) Ground Features and Objects. This file includes all features and objects found at ground elevation, such as roads, runways, ridges, peaks, valleys, catch-basins, tree/shrub outlines, individual elevation points, foundations (FAA and non-FAA), etc..

(2) Above-Ground Features and Objects. This file includes all data which is above ground elevation, except for tree data. The data includes house outlines, roof peak outlines, tanks, fences, chimneys, air vents, poles, FAA and non-FAA facilities such as NAVAIDS, and other elements where the elevation component is above the surrounding terrain.

(3) Treetops. This file includes representative treetop points within forested areas defined by tree outline, individual trees, shrubs, and associated greenery.

(4) Contours. This file includes all major and minor contour features.

(5) Control Points. This file includes the control survey points used in the photogrammetric interpretation.

(6) Text. If available, this file includes text information of a map product.

(7) Listing. This file is a listing defining the line type or string and symbol numbers used which should correspond to the respective FAA codes as outlined in paragraph 8.

b. The preferred format of these files is the standard plot file, such as Calcomp or HP, generated from the digitizing process to be used as input to a plotter system, or an output listing file produced by the PTLIST program from a KORK System, or KLT/ATLAS System, or equivalent.

c. Typically, this plot file contains mapping parameters, such as scale and rotation, and defines the features/outlines by line type or string numbers, and objects as symbol numbers with their respective horizontal coordinates and elevation. Certain rules must be followed in order to assure the integrity of data during conversion and compilation on the CADD system. These rules are as follows:

(1) Each feature/outline, designated as a specific line type, and object, designated as a specific symbol, must be enclosed within a set of commands or ranges which define the start and continuing or end coordinates of the items. Typical set commands used in plot files are "pen up or start" to define the start and "pen down or quit" to define continuing and end point. A change in line type or symbol is permitted only with a "pen up" type command to flag the change.

(2) Coordinates are to be based on the respective State Plane Grid Projections with elevation based on mean sea level datum, either NAD-27 or NAD-83.

(3) Accuracy level of data is determined by the scale of the map being produced for the provider as part of the product, usually ± 1 foot in horizontal control with ± 6 inches in elevation.

(4) For tree/shrub outline, the horizontal coordinates shall be of the extreme edge point with the corresponding ground elevation (i.e. "drip line").

(5) For above ground data such as a building, the data shall define the perimeter of the feature. For roof peaks, the data shall define the peak line and orientation.

(6) For above ground data where the items lean from vertical, the horizontal coordinates shall be of the top of the item and the elevation shall be of the top,

(7) Additional ground spots with elevations should be included in the Ground Features and Objects file to define the ground elevation surrounding above ground data such as buildings, tanks, fences. etc.. These points, being ground reference, are not required to have the same horizontal coordinates as the above ground data but should be in as close proximity to the item as feasible.

(8) For ground and above ground data defining NAVAIDS and/or visual aids facilities (SYMBOLS above 135), the horizontal coordinates shall represent the geographic centroid of the facility with the elevation of the respective foundation.

8. FEATURES AND OBJECTS CODE. The following codes associate information from photogrammetry, database, and drawings. These codes are specific in order to develop a database with multiple applications. FAA requests, if possible, that these codes be incorporated in the project. However, FAA has developed an internal translator to convert a provider's listing to the FAA's listing.

a. The designator code LTP refers to Line type or a feature comprised of multi-points, whereas SYM refers to Symbols, Markers, or objects of a single point. The associated number represents a unique code and can also represent layers. The last column provides the description of the feature or object, and can be used for layer name convention.

b. The respective FAA codes are as follows:

LTP	1	PAVED ROAD
LTP	2	CURBED ROAD
LTP	3	FOOT PATH
LTP	4	PAVED DRIVEWAY
LTP	5	UNPAVED DRIVEWAY
LTP	6	PARKING SPACES
LTP	7	DIRT ROAD
LTP	8	PAVED PARKINGS
LTP	9	UNPAVED PARKINGS
LTP	10	MOTORCYCLE TRAIL
LTP	11	RAMPS/DOCKS
LTP	12	DEBRIS/RUINS
LTP	13	PATIO
LTP	14	DECK
LTP	15	ACTIVE RAILROAD
LTP	16	INACTIVE RAILROAD
LTP	20	SIDEWALKS
LTP	21	CONCRETE SLABS
LTP	22	PAVED SHOULDERS
LTP	23	UNPAVED SHOULDERS
LTP	24	TOWERS
LTP	25	LARGE SIGNS
LTP	26	DRAINAGE GATE
LTP	27	STEPS
LTP	28	BLEACHERS
LTP	36	BUILDING U/C
LTP	37	BUILDING
LTP	38	CROSS-HATCHING
LTP	39	BLDG FOUNDATION
LTP	40	HOUSE BLD
LTP	41	EQUIPMENT SHELTER
LTP	56	FUEL TANK
LTP	57	PIPELINE
LTP	58	TANK OR SILO
LTP	59	FUEL STORAGE BLDG
LTP	60	WOODEN FENCE
LTP	61	OBSCURED FENCE
LTP	62	BOULDERS
LTP	63	RECREATION EQUIP
LTP	64	STANDING WALL
LTP	65	METAL FENCE
LTP	66	STONE WALL
LTP	67	RETAINING WALL
LTP	68	GUARD RAIL
LTP	69	ROCK FACE
LTP	70	ROOF PEAK
LTP	71	FOOTBRIDGE
LTP	72	RAILROAD BRIDGE
LTP	73	ROAD/HWAY BRIDGE
LTP	74	RUNWAY CENTERLINE
LTP	75	RUNWAY EDGES
LTP	76	TAXIWAY CENTERLINE
LTP	77	TAXIWAY EDGES
LTP	78	AIRPORT APRONS
LTP	79	AIR. PVMT FILLET
LTP	80	TREE OUTLINE
LTP	81	SCRUB LINE
LTP	82	SHRUBS

LTP	83	GOLF GREENS
LTP	84	SAND TRAPS
LTP	86	HEDGES
LTP	86	ORCHARD
LTP	87	TREE NURSERY
LTP	97	WHARF/PIERS
LTP	98	DAM
LTP	99	CULVERTS
LTP	100	DRAINAGE DITCH
LTP	101	CANAL
LTP	102	STORM DRAIN
LTP	103	CREEK OR STREAM
LTP	104	RIVER
LTP	105	DRY DITCH
LTP	106	POOL
LTP	107	LAKE
LTP	108	SEAWALL
LTP	109	SEASHORE
LTP	110	SWAMP OUTLINE
LTP	120	CONTOUR LINE
LTP	121	INDEX CONTOUR
LTP	122	DEPRESSION CONTOUR
LTP	123	INDEX DEPRSS CONTR
LTP	124	DASHED CONTOUR
LTP	125	DASHED INDEX CONTOUR
LTP	126	DASHED DEPRSS CONTR
LTP	127	DASHED IDX DPS CONTR
LTP	128	RUNWAY NUMBERS
LTP	129	THRESHOLD MARKING
LTP	130	HOLD LINE
SYM	2	HOUSE TOP POINT
SYM	3	ROAD SIGN
SYM	6	TREETOP ELEV
SYM	7	MAIL BOX
SYM	9	FIRE HYDRANT
SYM	10	UNKNOWN OBJECT
SYM	11	SILL ELEV/DTM PTS
SYM	12	CATCH BASIN
SYM	13	MANHOLE
SYM	14	WATER GATE
SYM	15	GAS GATE
SYM	16	DROP INLET
SYM	17	CHIMNEY
SYM	18	AIR VENT
SYM	19	BUTTERFLY VALE
SYM	20	BORING HOLE
SYM	21	PROBE
SYM	22	TOWER SUPPORT
SYM	23	UTILITY POLE
SYM	24	SMALL POLE
SYM	25	AERIAL ANTENNA
SYM	26	LIGHT POLE
SYM	62	SIGN
SYM	81	IND. EVERGREEN
SYM	82	IND. DECIDUOUS TREE
SYM	83	SCRUB
SYM	84	INDIVIDUAL SHRUB
SYM	85	DENSE TREES
SYM	86	INDIVIDUAL TREE
SYM	87	STUMP
SYM	110	MARSH/SWAMPS
SYM	111	RAPIDS
SYM	118	HORIZONTAL POINT
SYM	119	VERTICAL POINT
SYM	121	BOUNDARY CORNER
SYM	122	FLAGPOLE
SYM	123	B-BALL HOOP
SYM	124	RESIDENTIAL LAMP
SYM	125	LAMP POLE
SYM	126	POST
SYM	127	TRAFFIC SIGNAL
SYM	128	PHONE BOOTH
SYM	129	R.R. SIGNAL
SYM	130	POLE
SYM	131	GAS PUMPS
SYM	132	HEAD STONES
SYM	133	ELEC. BOX/A.C.U.
SYM	134	TRAFFIC CNTRL BOX
SYM	135	R.R.SWITCH BOX
SYM	136	WIND CONE
SYM	137	SEGMENTED CIRCLE
SYM	138	T/W EDGE ELEV LT
SYM	139	T/W EDGE INPVT LT
SYM	140	T/W CENTERLINE LT
SYM	141	T/W STOP BAR
SYM	142	R/W EDGE ELEV LT
SYM	143	R/W EDGE INPVT LT
SYM	144	R/W CENTERLINE LT
SYM	145	R/W THLD ELEV LT
SYM	146	R/W THLD INPVT LT
SYM	147	R/W TDZ INPVT LT
SYM	148	R/W HOLD BAR LT
SYM	151	ALS THLD ELEV BAR
SYM	152	ALS THLD INPVT BAR
SYM	153	ALS ELEV LIGHT BAR
SYM	154	ALS INPVT LIGHT BAR
SYM	158	VASI BOXES FDN
SYM	159	REAL LIGHTS FDN
SYM	160	LOCALIZER FDN
SYM	161	G/S ANTENNA FDN
SYM	162	G/S ANTENNA TOP
SYM	163	G/S MONITOR FDN
SYM	164	RVR TOWER CTR PT
SYM	165	VOR CENTER PT
SYM	166	ASR CENTER PT
SYM	167	ODALS
SYM	168	COMPASS CALIBRATION PAD

c. FAA recognizes that, during a project, new features or objects will be recognized. The provider should highlight these new features or objects in the submitted listing so that the FAA can assure capture during translation.

9. MEDIA. FAA can accept electronic deliverables on the following magnetic medium:

a. 5.25 inches, 1.2 MB, AEGIS or UNIX formatted floppy diskettes for reading on a HP/Apollo computer system.

b. 5.25 inch, 1.2 MB, or 3.5 inch, 1.44 MB, MS-DOS Version 3.0 or higher formatted floppy diskettes. Each file should consist of no more than 1 MB of information per file. Multi-files are preferred.

c. 1600 or 6250 BPI, 9 track tape reels, labeled or unlabeled, in ASCII, or EBCDIC. Records shall be 80 to 512 bytes long in no more than 2048 byte blocks written using a copy or equivalent command to produce files to be read on foreign systems. The recommended format for IGDS is 512 bytes record length with 2048 bytes block length.

d. 1/4 inch cartridge tape formatted for reading on a HP/Apollo computer running under the AEGIS or UNIX operating system.

e. In addition, each electronic deliverable shall be accompanied by a legible label affixed to the outside of each magnetic medium's protective case and a document that lists the files contained in that medium. The label shall bear the following:

(1) The name of the sender;

(2) The name of the intended recipient;

(3) A sender-unique identifier or title that can be used to reference the collective contents of the transmittal;

(4) Format descriptions necessary for reading the medium; and

(5) List file of the features and objects contained in the submittal.

(6) The contract or project number and/or name.

10. FAA POINT OF CONTACT. The FAA Airports Regional and/or District Office is the FAA point of contact dealing with the transfer of electronic data.

Appendix 16. NEW INSTRUMENT APPROACH PROCEDURES

1. BACKGROUND. This appendix applies to the establishment of new authorized instrument approach procedures. A Global Positioning System (GPS) instrument procedure duplicating an existing authorized instrument procedure is not a new procedure.

a. FAA Order 8260.3, United States Standards for Terminal Instrument Procedures (TERPS), paragraph 122, includes minimum standards for the approval of an instrument approach procedure. These minimum standards include in part:

(1) The airport landing surface must be adequate to accommodate the aircraft which can be reasonably expected to use the procedure.

(2) The airport must have been found acceptable for IFR operations as a result of an Airport Airspace Analysis (AAA) conducted pursuant to FAA Order 7400.2, Procedures for Handling Airspace Matters.

b. This appendix identifies these airport landing surface requirements to assist airport sponsors in their evaluation and preparation of the airport landing surface to support new instrument approach procedures. It also lists the airport data provided by the procedure sponsor which the FAA needs to conduct the airport airspace analysis specified in FAA Order 7400.2.

c. FAA Order 7400.2 is in the process of being revised to include the content of this appendix in a revised streamlined AAA process.

d. FAA Order 8260.19, Flight Procedures and Airspace, is also in the process of being revised to include the content of this appendix as the minimum airport landing surface requirements which must be meet prior to the establishment of instrument approach procedures at a public use airport.

2. INTRODUCTION. For a runway to have a new authorized instrument approach procedure, the runway must have an instrument runway designation. Instrument runways are runway end specific. Their runway end designation is based on the findings of an AAA study (Refer to Order 7400.2.)

a. For airports with an FAA-approved ALP, the instrument runway designation for the desired minimums must be depicted on the FAA-approved ALP. If not depicted, a change to the ALP is required. As part of the ALP approval process, the FAA will conduct an AAA study to determine the runway's acceptability for the desired minimums.

b. For other airports, the FAA, with the airport data submitted by airport sponsors and/or others, will conduct an AAA study to determine the runway's acceptability for the desired minimums. This assistance by the sponsor in providing the required airport data is a prerequisite in obtaining a favorable determination. In may cases, this is the only data available to the FAA for conducting the AAA study.

3. ACTION. The airport landing surface must meet the standards specified in table A16-1 for each specified runway direction and have adequate airspace to support the instrument approach procedure. When requesting an instrument procedure, the sponsor of the instrument approach procedure must specify the runway direction for the procedure, the desired approach minimums for each runway direction, and whether circling approach procedures are desired, as well as provide the following airport data for each specific runway direction:

a. For airports with an FAA-approved ALP, provide a copy of the FAA-approved ALP and, if required, submit a change to the ALP.

b. For other airports, provide the airport data identified in table A16-2 for visibility minimums of $\geq$1 statue mile and a decision height (or minimum descent altitude) $\geq$400 feet. Use table A16-3 for lower minimums. Minimums of $\geq$1 statue mile and $\geq$400 feet are approach visibility minimums of greater than or equal to 1 statue mile and Decision Height or Minimum Descent Altitude above the Runway Touchdown Zone of greater than or equal to 400 feet.

Table A16-1. Instrument approach requirements

Minimums and Airport Features[1]	1/2-statute mile and 200 feet	3/4-mile statute and < 300 feet	3/4-statute mile and ≥ 300 feet	≥1-statute mile and ≥400 feet
Airport Layout Plan[2]	*Required*	*Required*	*Required*	*Required*
TERPS Para 332 surfaces	34:1 clear	20:1 clear	20:1 clear	NA
Minimum Runway Length	*4,200 ft (Paved)* *1 280 m (Paved)*	*3,500 ft (Paved)* *1 067 m (Paved)*	*3,500 ft (Paved)* *1 067 m (Paved)*	*2,400 ft* *732 m*
Runway Markings	*Precision*	*Precision*	*Nonprecision*	*Visual*[3]
Holding Position Signs & Markings (See AC 150/5340-1 and AC 150/5340-18)	*Required*	*Required*	*Required*	*Required*[3]
Runway Edge Lights[4]	*Medium Intensity Runway Lights*	*Medium Intensity Runway Lights*	*Medium Intensity Runway Lights*	*Low Intensity Runway Lights*
Parallel Taxiway[5]	*Required*	*Required*	Recommended	Recommended
Approach Lights	*MALSR*	Recommended[6]	Recommended[6]	Not Required
Obstacle Free Zone (OFZ)[7]	*<3/4-statute mile approach visibility minimums*	*≥3/4-statute mile approach visibility minimums*	*≥3/4-statute mile approach visibility minimums*	*≥3/4-statute mile approach visibility minimums*
Threshold Siting Criteria To Be Met[7]	*Appendix 2, Paragraph 5e Criteria*	*Appendix 2, Paragraph 5d Criteria*	*Appendix 2, Paragraph 5d Criteria*	*Appendix 2, Paragraph 5b & c Criteria*

1. Minimums are subject to the application of FAA Order 8260.3 (TERPS). For CAT II and CAT III, also refer to AC 120-28, Criteria for Approval of Category III Landing Weather Minima, and AC 120-29, Criteria for Approving Category I and Category II Landing Minima for FAR 121 Operators.

2. For airports not obligated by Federal agreement to maintaining a current Airport Layout Plan, an engineering drawing providing the information in table A16-2 for minimums of ≥1 statute mile and ≥ 400 feet and table A16-3 for lower minimums, reflecting compliance with the above criteria, is acceptable in lieu of an Airport Layout Plan.

3. Unpaved runways require case-by-case evaluation.

4. Runway edge lighting is required for night minimums. High intensity lights are required for RVR-based minimums.

5. A parallel taxiway must lead to the threshold and, with airplanes on centerline, keep the airplanes outside the OFZ.

6. To achieve lower visibility minimums based on credit for lighting, a SSALS, MALSR, or ALSF (or ALS for 1/2 mile visibility reduction), as specified by TERPS, is required.

7. Circling procedures to a secondary runway from the primary approach will not be authorized when the secondary runway does not meet threshold siting (reference Appendix 2) and OFZ (reference paragraph 306) criteria.

Table A16-2. Airport information for desired minimums of ≥ 1-statute mile and ≥ 400 feet

1. **Layout of Existing Facilities and Features**. Refer to figures 2-1 and A6-1.

   a. **North Point** - Indicate both True and Magnetic North and the year of the declination. Orient drawing so that north is at the top of sheet. If this is not practicable, orient north so that it is to the left.

   b. **Runway Details** - Include the following:

      (1) Depict the length, width, and physical ends of runway and runway safety area.

      (2) Note the runway end coordinates and elevation to accuracies described in Appendix 7.

      (3) Note the length and width of the runway and the runway safety area.

      (4) Depict the runway end numbers and show true bearing for each direction.

   c. **Holding Position Signs and Markings** - Depict the holding position signs and markings distance from runway centerline. Use dimension lines.

   d. **OFZ Details** - Depict the OFZ with dimensions and note "NO OFZ OBJECT PENETRATIONS" when no object, other than frangible NAVAIDS, penetrates the OFZ. Otherwise show the penetration(s) and indicate how it (they) will be eliminated. Paragraph 306 and Table A16-4 describe the OFZ.

   e. **Threshold Details** - Depict thresholds with coordinates, elevation, displacement from runway end. Note "NO THRESHOLD SITING SURFACE OBJECT PENETRATIONS" when no object penetrates the OFZ. Otherwise, show any object that penetrates this surface and note how it will be eliminated. Table A16-4 describes the threshold siting surface.

2. **Airport Data Table** - Refer to example in figure A6-1.

   a. **Airport Elevation** - Include the airport elevation to an accuracy as described in Appendix 7.

   b. **Airport Reference Point (ARP)** - Note the ultimate planned ARP location.

3. **Runway Data Table** - Refer to example in figure A6-1.

   a. **Runway Marking** - Specify type of runway marking (Visual, Nonprecision, Precision, etc.).

   b. **Runway Lighting** - Specify type of runway edge lighting (None, LIRL, MIRL, HIRL).

4. **Legend Table** - Refer to example in figure A6-1.

Table A16-3. Airport information for lower minimums

1. **Layout of Existing Facilities and Features.** Refer to figures 2-1 and A6-1.

   a. **North Point** - Indicate both True and Magnetic North and the year of the declination used. Orient drawing so that north is at the top of sheet. If this is not practicable, orient north so that it is to the left.

   b. **Runway Details** - Include the following:

      (1) Depict the length, width, and physical ends of runway and runway safety area.

      (2) Note the runway end coordinates and elevation to accuracies described in Appendix 7, as well as the elevation of the highest point in the first 3,000 feet (915 m) from the threshold.

      (3) Note the length and width of the runway and the runway safety area.

      (4) Depict the runway end numbers and show true bearing for each direction.

   c. **Holding Position Signs and Markings** - Depict the holding position signs and markings distance from runway centerline. Use dimension lines.

   d. **Taxiway Details** - Depict the taxiway centerline separation distance from runway centerline. Use dimension lines.

   e. **OFZ Details** - Depict the OFZ with dimensions. Note "NO OFZ OBJECT PENETRATIONS" when no objects other than frangible NAVAIDS penetrate the OFZ. Otherwise, show the penetrations and indicate how they will be eliminated. Paragraph 306 describes the OFZ.

   f. **Threshold Details** - Depict thresholds, with coordinates, elevation, displacement from runway end. Note "NO THRESHOLD SITING SURFACE OBJECT PENETRATIONS" when no object penetrates the OFZ. Otherwise, show any object penetrating the threshold siting surface and note how it will be eliminated. Appendix 2, paragraph 5, describes the threshold siting surface.

2. **Airport Data Table** - Refer to example in figure A6-1.

   a. **Airport Elevation** - Include the airport elevation to an accuracy as described in Appendix 7.

   b. **Airport Reference Point (ARP)** - Note the ARP location based on ultimate planned airport configuration with latitude and longitude to the nearest second based on NAD 83.

3. **Runway Data Table** - Refer to example in figure A6-1.

   a. **Runway Marking** - Specify type of runway marking (Visual, Nonprecision, Precision, etc.).

   b. **Runway Lighting** - Specify type of runway edge lighting (None, LIRL, MIRL, HIRL).

   c. **Approach Lighting** - Specify type (None, ODALS, MALS, MALSR, etc.).

4. **Legend Table** - Refer to example in figure A6-1.

Table 16-4. OFZ and threshold siting surface for minimums of ≥ 1-statute mile and ≥400 feet

1. **OFZ**[1] - The OFZ is the airspace above a surface centered on runway centerline whose elevation at any point is the same as the elevation of the nearest point on the runway centerline. The runway OFZ extends 200 feet (60 m) beyond each end of the runway. Its width is:

   a. 400 feet (120 m) for runways serving airplanes of more than 12,500 pounds (5 700 kg) maximum certificated takeoff weight, and

   b. 250 feet (75 m) for runways serving airplanes of 12,500 pounds (5 700 kg) or less maximum certificated takeoff weight exclusively.

2. **Threshold Siting Surface** - The threshold siting surface starts at the threshold, at the threshold elevation, and slopes upward from the threshold at a slope 20 (horizontal) to 1 (vertical). In the plan view:

   a. **for runways serving airplanes of more than 12,500 pounds (5 700 kg) maximum certificated takeoff weight,** the centerline of this surface extends 10,000 feet (3 000 m) along the extended runway centerline. This surface extends laterally 200 feet (60 m) on each side of the centerline at the threshold and increases in width to 500 feet (150 m) at a point 1,500 feet (450 m) from the threshold; thereafter, it extends laterally 500 feet (150 m) on each side of the centerline.

   b. **for runways serving airplanes of 12,500 pounds (5 700 kg) or less maximum certificated takeoff weight exclusively,** the centerline of this surface extends 5,000 feet (1 530 m) along the extended runway centerline. This surface extends laterally 125 feet (38 m) on each side of the centerline at the threshold and increases in width to 350 feet (110 m) at a point 2,250 feet (690 m) from the threshold; thereafter, it extends laterally 350 feet (110 m) on each side of the centerline.

1. More information on OFZ criteria is found in Paragraph 306.

Appendix 17. ACRONYMS

The acronyms presented herein are intended for use with this publication only.

AAA	Airport Airspace Analysis
AC	Advisory Circular
AD	Airport Design
ADG	Airplane Design Group
AIP	Airport Improvement Program
ALP	Airport Layout Plan
ALS	Approach Lighting System
ARC	Airport Reference Code
ARP	Airport Reference Point
ASDA	Accelerate-Stop Distance Available
ASDE	Airport Surface Detection Equipment
ASR	Airport Surveillance Radar
ATC	Air Traffic Control
ATCT	Airport Traffic Control Tower
AWOS	Automated Weather Observing System
AZ	Azimuth
BRL	Building Restriction Line
CAT	Category
CFR	Code of Federal Regulation
CFW	Center Field Wind
CWY	Clearway
DME	Distance Measuring Equipment
DXF	AutoCAD Drawing Interchange file format
EDS	Environmental Data Service
EL	Elevation
FBO	Fixed Base Operator
GS	Glide Slope
GVGI	Generic Visual Slope Indicator
IFR	Instrument Flight Rules
IGES	Initial Graphics Exchange Specification file format
ILS	Instrument Landing System
IM	Inner Marker
IMC	Instrument Meteorological Conditions
LDA	Landing Distance Available
LDIN	Lead-In Lights
LIRS	Low Impact Resistant Supports
LOC	Localizer
MALS	Medium Intensity Approach Lighting System
MALSF	Medium Intensity Approach Lighting System with Sequenced Flashers
MALSR	Medium Intensity Approach Lighting System with Runway Alignment Indicator Lights
MLS	Microwave Landing System
MM	Middle Marker
MSL	Mean Sea Level
NAVAID	Navigational Aid
NCDC	National Climatic Data Center
NDB	Nondirectional Beacon
NP	Mon-Precision (Markings)
NTIS	National Technical Information Service
ODALS	Omnidirectional Approach Lighting System
OFA	Object Free Area
OFZ	Obstacle Free Zone
OM	Outer Marker
P	Precision (Markings)
PAPI	Precision Approach Path Indicator
RAIL	Runway Alignment Indicator Lights
ROFA	Runway Object Free Area
RPZ	Runway Protection Zone
RSA	Runway Safety Area
RVR	Runway Visual Range
RW	Runway
SWY	Stopway
TERPS	Terminal Instrument Procedures
TH	Threshold
TL	Taxilane
TODA	Takeoff Distance Available
TORA	Takeoff Run Available
TSA	Taxiway Safety Area
TVOR	Very High Frequency Omnirange located on an airport
TW	Taxiway
USGS	United States Geological Service
V	Visual (Markings)
V_1	Takeoff decision speed
V_2	Takeoff safety speed
VFR	Visual Flight Rules
V_{LOF}	Lift-off speed
V_{SO}	Stalling speed or the minimum steady flight speed in the landing configuration
VOR	Very High Frequency Omnirange

Appendix 18. INDEX

Accelerate-Stop Distance Available (ASDA)
  definition 2
  length 276
Acronyms 297
Adaptation of Airport Design Standards 5
Administration Building 118
Advisory Circular (AC) 3
Aeronautical Studies 6, 13
Aircraft Approach Category
  airplane listing 251
  definition 1
  selection 4
Aircraft Parking Area 10, 14, 15, 117, 139
Airplane Data 156, 165, 251
Airplane Design Group (ADG)
  airplane listing 251
  definition 1
  selection 4
Airport Buildings 117
Airport Design Standards Modification 5
Airport Elevation
  definition 1
Airport Layout Plan (ALP)
  application 9
  components 131
  definition 1
  preparation 131
  requirements 5
  typical plan 126
Airport property requirements 9
Airport Reference Code (ARC)
  definition 4
  standards 4
Airport Reference Point (ARP)
  definition 1
  standards 107
Airport Rotating Beacon 65
Airport Surface Detection Equipment (ASDE) 66
Airport Surveillance Radar (ASR) 66
Airport Survey 122
Airport Traffic Control Tower (ATCT) 65
Airport Traffic Control Tower Visibility 10, 35
Airspace Availability 9
Approach Lighting System (ALS)
  ALSF-2 64
  MALS 64
  MALSF 64
  MALSR 64
Apron for Based Airplanes 117
Aprons
  criteria 10
  gradient 54
Auto Parking 13, 123
Aviation easements 9
Bird Hazards 10
Blast Fence
  criteria 77
  definition 1
Bridges
  approach aprons 70
  blast protection 70
  curbs 70
  height 69
  length 69
  load considerations 69
  longitudinal grades 69
  marking and lighting 69
  pavement heating 70
  security fences 70
  service roads 70
  siting precepts 69
  width 69
Building Plan 122
Building Restriction Line (BRL)
  criteria 12
  definition 1
Bypass Taxiway 34
Category I (CAT I) Runway 2
Category II (CAT II) Runway 2
Category III (CAT III) Runway 2
Center Field Wind (CFW) Installations 66
Clear Zone 1
Clear Zone (See Runway Protection Zone) . 2, 13, 276
Clearway (CWY)
  definition 1
  standards 22, 139, 276
Compass Calibration Pad
  criteria 111
  definition 1
Computer Program 34, 35, 88, 146, 153
Crosswind Runway 10, 87
Crosswinds
  definition 87
Declared Distances
  criteria 275, 276
  definition 1
Displaced Threshold
  definition 3
  siting requirements 101
Dual Parallel Taxiway 35
Eating Facilities 123
Electronic Deliverables 283
Entrance Taxiway 34

Environmental
assessments 6, 9
Exit Taxiway 35, 142
FAA Studies of Objects 6, 13
Federal Assistance 6
Frangible NAVAID
definition 2
Hangars 118
Hazard to Air Navigation
definition 2
determination 6
presumption 2
Holding Bay 34
Holdline
to runway 10, 14, 15, 139
Inner-approach OFZ
definition 2
standards 22
Inner-transitional OFZ
definition 2
standards 22
Instrument Approach Procedures 291
Instrument Landing System (ILS)
glide slope 61, 62
localizer 61, 62
marker beacons 61, 63
Jet Blast
heat effects 77
pressures 77
velocity distances 77
Landing Distance Available (LDA)
definition 2
length 276
Large Airplane
definition 2
Lead-in Lighting System (LDIN) 65
Local Role 6
Low Impact Resistant Supports (LIRS)
definition 2
Manager's Office 123
Metric Conversion 125
Microwave Landing System (MLS) 59
Modification of Airport Design Standards 5
Navigational Aids (NAVAIDs)
clearing requirements 59
non-Federal 59
protection 59, 67
siting 59
Nondirectional Beacon (NDB) 63
Notice to the FAA
airport development 5
proposed construction 6
Object
definition 2
Object Clearing Criteria
recommendations 13
standards 12
Object Free Area (OFA)
definition 2
standards 22, 33, 276
Obstacle Free Zone (OFZ)
definition 2
standards 21, 139
Obstruction to Air Navigation
definition 2
presumption 2
survey requirement 9
Omindirectional Approach Lighting System
(ODALS) 65
Parallel Taxiway 33
Property requirements 9
Public Restrooms 123
Recommendations
requirement 1
Related Reading Material 3
Relocated Threshold
definition 3
siting requirements 101
Rescue and Firefighting Access Roads 23
Roads 123
Runway (RW)
definition 2
gradient 49
length 21
line of sight 56
location 9
orientation 9, 87
requirements for additional runways 10, 87
to aircraft parking area 10, 14, 15, 139
to helicopter touchdown pad 10, 14, 15
to holdline 10, 14, 15, 139
to parallel runway 11
to parallel taxilane 10, 12, 14, 15, 139
to parallel taxiway 10, 12, 14, 15, 139
width 21
Runway Blast Pad
definition 2
drainage 78
gradient 54
length 21, 78
marking and lighting 78
surface characteristics 21
surface strength 78
width 21, 78
Runway Object Free Area
background 139
definition 2
standards 22, 276

Runway OFZ
definition 2
standards 21
Runway Protection Zone (RPZ)
criteria 13, 140, 276
definition 2
Runway Safety Area (RSA)
background 139
definition 3
gradient 54
length 21, 276
surface characteristics 21
width 21
Runway Shoulder
definition (See Shoulder) 3
drainage 78
gradient 54
marking and lighting 78
strength 78
surface characteristics 21
width 21, 78
Runway visibility zone 56
Runway Visual Range Facilities 66
Separation Standards 10, 14-16
Shoulder
definition 3
Small Airplane
definition 3
Standards
applicability 5
modification 5
requirement 1
State Role 6
Stopway (SWY)
definition 3
gradient 49
location 23
standards 139
surface characteristics 23
width 23
Takeoff Distance Available (TODA)
definition 1
length 276
Takeoff Run Available (TORA)
definition 1
length 276
Taxilane (TL)
airport traffic control tower visibility 35
definition 3
dimensional standards 33
on apron edge 35
to object 10, 16, 141
to parallel runway 10, 12, 14, 15, 139
to parallel taxilane 10, 16, 141
to parallel taxiway 10, 16, 141
to parked aircraft 10, 16, 141
to service and maintenance roads . . . 10, 16, 141
Taxilane Object Free Area
definition 2
standards 33
width 33, 141
wingtip clearance 33
Taxiway (TW)
airport traffic control tower visibility 35
definition 3
dimensional standards 33
edge safety margin 34, 36
gradient 54
intersections 34
layout 10
line of sight 56
on apron edge 35
pavement fillet 34, 36, 38, 149
taxiway between parallel runways 35
to object 10, 16, 141
to parallel runway 10, 12, 14, 15, 139
to parallel taxilane 10, 16, 141
to parallel taxiway 10, 16, 141
to parked aircraft 10, 16, 141
to service and maintenance roads . . . 10, 16, 141
width 33, 36, 141
Taxiway Object Free Area
definition 2
standards 33
width 33, 141
wingtip clearance 33
Taxiway Safety Area (TSA)
definition 3
gradient 54
surface characteristics 33
width 33, 142
Taxiway Shoulder
definition (See Shoulder) 3
drainage 78
gradient 54
marking and lighting 78
strength 78
surface characteristics 33
width 33, 78
Terminal Very High Frequency Omnirange (TVOR) 64
Threshold (TH)
definition 3
siting requirements 101
Tiedowns 117, 118
Transient Apron 117
Tunnels
drainage 70
lighting. 70
passenger and baggage 70
ventilation 70

Turnaround 35
Vehicle Parking 13, 123
Visual Runway
definition 3
Waiting Room 122
Wind Analysis 9, 87
Wind Coverage 87
Wingtip Clearance 33, 146

Recycled
Recyclable