U.S. Department
of Transportation

Federal Aviation Administration

Standards for Specifying Construction of Airports

AC: **150/5370-10A**
Date: **2/17/89**

Advisory Circular

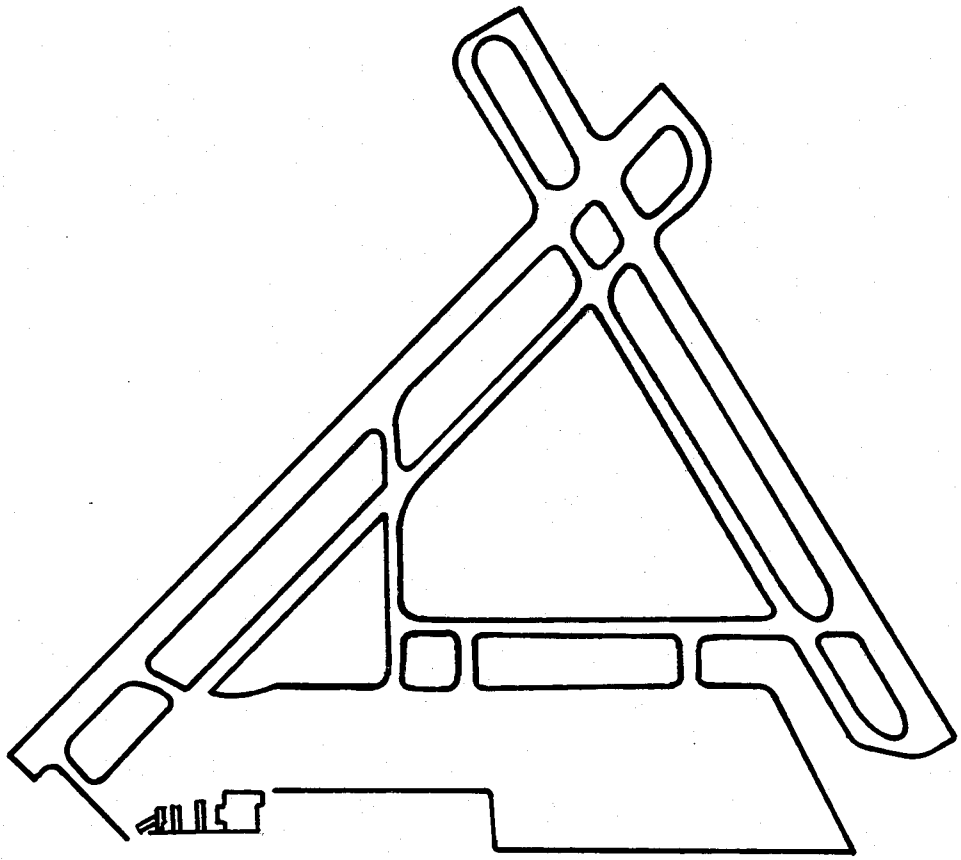

U.S. Department of Transportation
Federal Aviation Administration

Advisory Circular

Subject: STANDARDS FOR SPECIFYING CONSTRUCTION OF AIRPORTS

Date: 2/17/89
Initiated by: AAS-200

AC No: 150/5370-10A
Change:

1. PURPOSE. This advisory circular (AC) provides standards for the construction of airports. Items covered include earthwork, drainage, paving, turfing, lighting, and incidental construction.

2. FOCUS. Projects funded under the Airport Improvement Program (AIP) must be developed in accordance with standards developed by the Secretary of Transportation. The standards contained in this AC relate to materials and methods used in the construction of airports.

3. CANCELLATION. AC 150/5370-10, Standards for Specifying Construction of Airports, dated October 24, 1974, is cancelled.

4. BACKGROUND. This revised AC incorporates Changes 1 through 24 previously contained in AC 150/5370-10, and deletes several obsolete standards (P-153, P-201, P-206, P-214, P-215, P-216, P-408, L-112, L-125, and T-611). All other standards have been updated to incorporate ASTM standards in lieu of AASHTO standards, eliminate obsolete ASTM, MIL, and FED. SPEC. testing and material requirements, and have been rewritten in guide specification format. The density acceptance criteria for Item P-401 has been revised to reflect a new lower specification limit and use of the standard deviation to compute acceptance parameters.

5. APPLICATION. The standards contained herein are recommended by the Federal Aviation Administration for use in the construction of airports. For federally funded projects, the standards are mandatory.

Leonard E. Mudd
Director, Office of Airport Safety and Standards

For sale by the Superintendent of Documents, U.S. Government Printing Office, Washington, D.C. 20402

NOTICE TO USERS

Projects funded under the Airport Improvement Program (AIP) must be developed in accordance with policies, standards, and specifications approved by the Secretary, Department of Transportation. The standards contained in this advisory circular (AC) relate to materials and methods used in the construction of airports.

Since it is not feasible to provide construction specifications that can be applied to all geographical areas of the United States, its territories and possessions, the guide specifications in this AC should be used in developing project specifications. The verbatim incorporation of these standards in contract specifications is not practical because of the numerous decisions which must be made by the Engineer regarding local materials, methods, and requirements. For this reason, the notes (shown between lines of asterisks) elaborate on the options available to the Engineer when preparing a specification and to ensure that sound engineering judgment is applied.

Appropriate changes and additions required by the notes must be made. Where numbers, words, phrases or sentences are enclosed in brackets [ ], a choice or modification must be made. Where blank spaces [ ] occur in sentences, the appropriate data must be inserted. Where entire paragraphs are not applicable, they should be deleted. Additional sentences may be added if necessary. The final project specifications shall not include notes to the Engineer.

The standards should be used to develop construction specifications for either (1) a particular state, or (2) an individual project. They will not be made a part of a contract merely by reference. Pertinent portions should be copied verbatim into the contract documents.

For state specifications, the necessary choices and engineering judgments should be made to develop the standards into specifications for a particular state. On approval by the FAA, these state specifications may be incorporated in construction contracts by reference. The state specifications must be readily available to all parties interested in such contracts.

For individual projects, construction specifications may be produced by making the necessary choices and engineering judgments and developing the standards into specifications for a particular project.

FAA airports field representatives, designated by regional offices, have the authority to approve modifications to standards contained in this AC if the modifications provide acceptable levels of safety, economy, durability and workmanship and are necessary to meet local conditions. When preparing construction contracts for AIP projects, the user should contact these FAA representatives to obtain the mandatory provisions (wage, labor, EEO, etc.) that must be included in all AIP contract proposals. Additional contract clauses may be required to comply with local and state laws relating to advertising, awarding, and administrating construction contracts.

An automated version of this AC is available in Word Perfect 4.2 format or ASCII and provides the user with a means for automatically developing specifications. The automated version is contained on four (4) 360 kilobyte disks and requires an IBM compatible personal computer having one (1) floppy drive or a hard disk drive. Version 2.0 or greater of MS-DOS is the operating system required.

Disks are available from the National Technical Information Service (NTIS) at a cost of $78.00 each. To order, make a check or money order payable to NTIS. Mail it with the AC number and title and NTIS Order Number to:

United States Department of Commerce
National Technical Information Service
5825 Port Royal Road
Springfield, Virginia 22161

The Order Number for the Word Perfect format is PB89-159560. The Order Number for the ASCII format is PB89-159552.

To order by phone, call (703) 487-4650. Credit card and deposit accounts are accepted by NTIS.

Copies of the AC may be ordered from the Superintendent of Documents. Contact them for the correct stock number and the current price.

Superintendent of Documents
U.S. Government Printing Office
Washington, DC 20402

NOTICE

Changes to AC 150/5370-10A will be distributed free of charge by the U.S. Department of Transportation. Persons who want to be placed on the mailing list to receive changes automatically to this advisory circular must use the order blank provided below.

As changes are issued, they will be announced in AC 00-2, Advisory Circular Checklist (and Status of Other FAA Publications). To be placed on the mailing list to receive Advisory Circular 00-2, submit your request to the Department of Transportation, Distribution Requirements Section, M-494.1, Washington, D.C. 20590, specifying the 00-2 General series.

Persons who do not want to receive the changes automatically can order the changes individually, free of charge, from the U.S. Department of Transportation, Utilization and Storage Section, M-443.2, Washington, D.C. 20590.

ORDER FORM

TO: U.S. Department of Transportation
Distribution Requirements Section
M-494.1
Washington, D.C. 20590

Please place my name (or firm name) on the Federal Aviation Administration's 0464 series mailing list to receive _____ copy(s) of all advisory circulars issued in that series.

NAME: _____

ADDRESS: _____
(Street)

_____
(City) (State) (Zip)

CONTENTS

Notice to Users iii

PART I—GENERAL PROVISIONS

Section 10. Definition of Terms 3
Section 20. Proposal Requirements and Conditions 7
Section 30. Award and Execution of Contract 11
Section 40. Scope of Work 13
Section 50. Control of Work 17
Section 60. Control of Materials 23
Section 70. Legal Relations and Responsibility to Public 27
Section 80. Prosecution and Progress 35
Section 90. Measurement and Payment 41

PART II—EARTHWORK

Item P-151 Clearing and Grubbing 49
Item P-152 Excavation and Embankment 53
Item P-154 Subbase Course 63
Item P-155 Lime-Treated Subgrade 67
Item P-156 Temporary Air and Water Pollution, Soil Erosion, and Siltation Control 71

PART III—FLEXIBLE BASE COURSES

Item P-208 Aggregate Base Course 77
Item P-209 Crushed Aggregate Base Course 83
Item P-210 Caliche Base Course 87
Item P-211 Lime Rock Base Course 91
Item P-212 Shell Base Course 95
Item P-213 Sand-Clay Base Course 99
Item P-217 Aggregate-Turf Pavement 103

PART IV—RIGID BASE COURSES

Item P-301 Soil Cement Base Course 111
Item P-304 Cement Treated Base Course 117
Item P-306 Econocrete Subbase Course 125

PART V—FLEXIBLE SURFACE COURSES

Item P-401 Plant Mix Bituminous Pavements 137
Item P-402 Porous Friction Course 155

PART VI—RIGID PAVEMENT

Item P-501 Portland Cement Concrete Pavement 169

PART VII—MISCELLANEOUS

Item P-602 Bituminous Prime Coat 195
Item P-603 Bituminous Tack Coat 199
Item P-605 Joint Sealing Filler 203
Item P-606 Adhesive Compounds 207
Item P-609 Seal Coats and Bituminous Surface Treatment 211
Item P-610 Structural Portland Cement Concrete 217
Item P-620 Runway and Taxiway Painting 225
Item P-625 Coal-Tar Pitch Emulsion Sealcoat 229
Item P-626 Emulsified Asphalt Slurry Seal Surface Treatment 235

PART VIII—FENCING

Item F-160 Wire Fence with Wood Posts 245
Item F-161 Wire Fence with Steel Posts 251
Item F-162 Chain Link Fences 255

PART IX—DRAINAGE

Item D-701 Pipe for Storm Drains and Culverts 261
Item D-705 Pipe Underdrains for Airports 267
Item D-751 Manholes, Catch Basins, Inlets, and Inspection Holes 273
Item D-752 Concrete Culverts, Headwalls, and Miscellaneous Drainage Structures 279
Item D-754 Concrete Paved Gutters, Ditches, and Flumes 283

PART X—TURFING

Item T-901 Seeding 287
Item T-903 Sprigging 293
Item T-904 Sodding 297
Item T-905 Topsoiling 301
Item T-907 Tilling 305
Item T-908 Mulching 307

PART XI—LIGHTING INSTALLATION

Item L-101 Airport Rotating Beacon 313
Item L-102 Airport Hazard Beacon 317
Item L-103 Airport Beacon Towers 321
Item L-107 Airport Wind Cones 325
Item L-108 Airport Underground Cable 329
Item L-109 Airport Transformer Vault and Equipment 335
Item L-110 Airport Underground Electrical Duct 343
Item L-119 Airport Obstruction Lights 347

PART I—GENERAL PROVISIONS

GENERAL PROVISIONS

SECTION 10

DEFINITION OF TERMS

Whenever the following terms are used in these specifications, in the contract, in any documents or other instruments pertaining to construction where these specifications govern, the intent and meaning shall be interpreted as follows:

10-01 AASHTO. The American Association of State Highway and Transportation Officials, the successor association to AASHO.

10-02 ACCESS ROAD. The right-of-way, the roadway and all improvements constructed thereon connecting the airport to a public highway.

10-03 ADVERTISEMENT. A public announcement, as required by local law, inviting bids for work to be performed and materials to be furnished.

10-04 AIP. The Airport Improvement Program, a grant-in-aid program, administered by the Federal Aviation Administration.

10-05 AIR OPERATIONS AREA. For the purpose of these specifications, the term air operations area shall mean any area of the airport used or intended to be used for the landing, takeoff, or surface maneuvering of aircraft. An air operation area shall include such paved or unpaved areas that are used or intended to be used for the unobstructed movement of aircraft in addition to its associated runway, taxiway, or apron.

10-06 AIRPORT. Airport means an area of land or water which is used or intended to be used for the landing and takeoff of aircraft, and includes its buildings and facilities, if any.

10-07 ASTM. The American Society for Testing and Materials.

10-08 AWARD. The acceptance, by the owner, of the successful bidder's proposal.

10-09 BIDDER. Any individual, partnership, firm, or corporation, acting directly or through a duly authorized representative, who submits a proposal for the work contemplated.

10-10 BUILDING AREA. An area on the airport to be used, considered, or intended to be used for airport buildings or other airport facilities or rights-of-way together with all airport buildings and facilities located thereon.

10-11 CALENDAR DAY. Every day shown on the calendar.

10-12 CHANGE ORDER. A written order to the Contractor covering changes in the plans, specifications, or proposal quantities and establishing the basis of payment and contract time adjustment, if any, for the work affected by such changes. The work, covered by a change order, shall be within the scope of the contract.

10-13 CONTRACT. The written agreement covering the work to be performed. The awarded contract shall include, but is not limited to: The Advertisement; The Contract Form; The Proposal; The Performance Bond; The Payment Bond; any required insurance certificates; The Specifications; The Plans, and any addenda issued to bidders.

10-14 CONTRACT ITEM (PAY ITEM). A specific unit of work for which a price is provided in the contract.

10-15 CONTRACT TIME. The number of calendar days or working days, stated in the proposal, allowed for completion of the contract, including authorized time extensions. If a calendar date of completion is stated in the proposal, in lieu of a number of calendar or working days, the contract shall be completed by that date.

10-16 CONTRACTOR. The individual, partnership, firm, or corporation primarily liable for the acceptable performance of the work contracted and for the payment of all legal debts pertaining to the work who acts directly or through lawful agents or employees to complete the contract work.

10-17 DRAINAGE SYSTEM. The system of pipes, ditches, and structures by which surface or subsurface waters are collected and conducted from the airport area.

10-18 ENGINEER. The individual, partnership, firm, or corporation duly authorized by the owner (sponsor) to be responsible for engineering supervision of the contract work and acting directly or through an authorized representative.

10-19 EQUIPMENT. All machinery, together with the necessary supplies for upkeep and maintenance, and also all tools and apparatus necessary for the proper construction and acceptable completion of the work.

10-20 EXTRA WORK. An item of work not provided for in the awarded contract as previously modified by change order or supplemental agreement, but which is found by the Engineer to be necessary to complete the work within the intended scope of the contract as previously modified.

10-21 FAA. The Federal Aviation Administration of the U.S. Department of Transportation. When used to designate a person, FAA shall mean the Administrator or his/her duly authorized representative.

10-22 FEDERAL SPECIFICATIONS. The Federal Specifications and Standards, and supplements, amendments, and indices thereto are prepared and issued by the General Services Administration of the Federal Government.

10-23 INSPECTOR. An authorized representative of the Engineer assigned to make all necessary inspections and/or tests of the work performed or being performed, or of the materials furnished or being furnished by the Contractor.

10-24 INTENTION OF TERMS. Whenever, in these specifications or on the plans, the words "directed," "required," "permitted," "ordered," "designated," "prescribed," or words of the like import are used, it shall be understood that the direction, requirement, permission, order, designation, or prescription of the Engineer is intended; and similarly, the words "approved," "acceptable," "satisfactory," or words of like import, shall mean approved by, or acceptable to, or satisfactory to the Engineer, subject in each case to the final determination of the owner.

Any reference to a specific requirement of a numbered paragraph of the contract specifications or a cited standard shall be interpreted to include all general requirements of the entire section, specification item, or cited standard that may be pertinent to such specific reference.

10-25 LABORATORY. The official testing laboratories of the owner or such other laboratories as may be designated by the Engineer.

10-26 LIGHTING. A system of fixtures providing or controlling the light sources used on or near the airport or within the airport buildings. The field lighting includes all luminous signals, markers, floodlights, and illuminating devices used on or near the airport or to aid in the operation of aircraft landing at, taking off from, or taxiing on the airport surface.

10-27 MAJOR AND MINOR CONTRACT ITEMS. A major contract item shall be any item that is listed in the proposal, the total cost of which is equal to or greater than 20 percent of the total amount of the award contract. All other items shall be considered minor contract items.

10-28 MATERIALS. Any substance specified for use in the construction of the contract work.

10-29 NOTICE TO PROCEED. A written notice to the Contractor to begin the actual contract work on a previously agreed to date. If applicable, the Notice to Proceed shall state the date on which the contract time begins.

10-30 OWNER (SPONSOR). The term owner shall mean the party of the first part or the contracting agency signatory to the contract. For AIP contracts, the term sponsor shall have the same meaning as the term owner.

10-31 PAVEMENT. The combined surface course, base course, and subbase course, if any, considered as a single unit.

10-32 PAYMENT BOND. The approved form of security furnished by the Contractor and his/her surety as a guaranty that he will pay in full all bills and accounts for materials and labor used in the construction of the work.

10-33 PERFORMANCE BOND. The approved form of security furnished by the Contractor and his/her surety as a guaranty that the Contractor will complete the work in accordance with the terms of the contract.

10-34 PLANS. The official drawings or exact reproductions which show the location, character, dimensions and details of the airport and the work to be done and which are to be considered as a part of the contract, supplementary to the specifications.

10-35 PROJECT. The agreed scope of work for accomplishing specific airport development with respect to a particular airport.

10-36 PROPOSAL. The written offer of the bidder (when submitted on the approved proposal form) to perform the contemplated work and furnish the necessary materials in accordance with the provisions of the plans and specifications.

10-37 PROPOSAL GUARANTY. The security furnished with a proposal to guarantee that the bidder will enter into a contract if his/her proposal is accepted by the owner.

10-38 RUNWAY. The area on the airport prepared for the landing and takeoff of aircraft.

10-39 SPECIFICATIONS. A part of the contract containing the written directions and requirements for completing the contract work. Standards for specifying materials or testing which are cited in the contract specifications by reference shall have the same force and effect as if included in the contract physically.

10-40 STRUCTURES. Airport facilities such as bridges; culverts; catch basins, inlets, retaining walls, cribbing; storm and sanitary sewer lines; water lines; underdrains; electrical ducts, manholes, handholes, lighting fixtures and bases; transformers; flexible and rigid pavements; navigational aids; buildings; vaults; and, other manmade features of the airport that may be encountered in the work and not otherwise classified herein.

10-41 SUBGRADE. The soil which forms the pavement foundation.

10-42 SUPERINTENDENT. The Contractor's executive representative who is present on the work during progress, authorized to receive and fulfill instructions from the Engineer, and who shall supervise and direct the construction.

10-43 SUPPLEMENTAL AGREEMENT. A written agreement between the Contractor and the owner covering: (1) work that would increase or decrease the total amount of the awarded contract, or any major contract item, by more than 25 percent, such increased or decreased work being within the scope of the originally awarded contract; or (2) work that is not within the scope of the originally awarded contract.

10-44 SURETY. The corporation, partnership, or individual, other than the Contractor, executing payment or performance bonds which are furnished to the owner by the Contractor.

10-45 TAXIWAY. For the purpose of this document, the term taxiway means the portion of the air operations area of an airport that has been designated by competent airport authority for movement of aircraft to and from the airport's runways or aircraft parking areas.

10-46 WORK. The furnishing of all labor, materials, tools, equipment, and incidentals necessary or convenient to the Contractor's performance of all duties and obligations imposed by the contract, plans, and specifications.

10-47 WORKING DAY. A working day shall be any day other than a legal holiday, Saturday, or Sunday on which the normal working forces of the Contractor may proceed with regular work for at least 6 hours toward completion of the contract. Unless work is suspended for causes beyond the Contractor's control, Saturdays, Sundays and holidays on which the Contractor's forces engage in regular work, requiring the presence of an inspector, will be considered as working days.

SECTION 20

PROPOSAL REQUIREMENTS AND CONDITIONS

20-01 ADVERTISEMENT (Notice to Bidders).

* *

The owner, or his/her authorized agent, shall publish the advertisement at such places and at such times as are required by local law or ordinances. The published advertisement shall state the time and place for submitting sealed proposals; a description of the proposed work; instructions to bidders as to obtaining proposal forms, plans, and specifications; proposal guaranty required; and the owner's right to reject any and all bids.

* *

20-02 PREQUALIFICATION OF BIDDERS. Each bidder shall furnish the owner satisfactory evidence of his/her competency to perform the proposed work. Such evidence of competency, unless otherwise specified, shall consist of statements covering the bidder's past experience on similar work, a list of equipment that would be available for the work, and a list of key personnel that would be available. In addition, each bidder shall furnish the owner satisfactory evidence of his/her financial responsibility. Such evidence of financial responsibility, unless otherwise specified, shall consist of a confidential statement or report of the bidder's financial resources and liabilities as of the last calendar year or the Contractor's last fiscal year. Such statements or reports shall be certified by a public accountant. At the time of submitting such financial statements or reports, the bidder shall further certify whether his/her financial responsibility is approximately the same as stated or reported by the public accountant. If the bidder's financial responsibility has changed, the bidder shall qualify the public accountant's statement or report to reflect his/her (bidder's) true financial condition at the time such qualified statement or report is submitted to the owner.

Unless otherwise specified, a bidder may submit evidence that he is prequalified with the State Highway Division and is on the current "bidder's list" of the state in which the proposed work is located. Such evidence of State Highway Division prequalification may be submitted as evidence of financial responsibility in lieu of the certified statements or reports hereinbefore specified.

Each bidder shall submit "evidence of competency" and "evidence of financial responsibility" to the owner no later than 10 days prior to the specified date for opening bids.

20-03 CONTENTS OF PROPOSAL FORMS. The owner shall furnish bidders with proposal forms. All papers bound with or attached to the proposal forms are necessary parts and must not be detached.

The plans specifications, and other documents designated in the proposal form shall be considered a part of the proposal whether attached or not.

* *

The proposal forms that are to be furnished to bidders should state the location and description of the proposed construction, the place, date, and time of opening of the proposals, and should show the estimated quantities of the various items of work to be performed and materials to be furnished for which unit bid prices are asked. The proposal form shall state the time in which the work must be completed, and the amount of the proposal guaranty which must accompany the proposal. Should the owner require a prebid conference, the time, date, and place shall be stated in the proposal.

For AIP contracts, the proposal shall conform to the requirements of local laws and ordinances pertaining to letting of contracts.

* *

20-04 ISSUANCE OF PROPOSAL FORMS. The owner reserves the right to refuse to issue a proposal form to a prospective bidder should such bidder be in default for any of the following reasons:

a. Failure to comply with any prequalification regulations of the owner, if such regulations are cited, or otherwise included, in the proposal as a requirement for bidding.

b. Failure to pay, or satisfactorily settle, all bills due for labor and materials on former contracts in force (with the owner) at the time the owner issues the proposal to a prospective bidder.

c. Contractor default under previous contracts with the owner.

d. Unsatisfactory work on previous contracts with the owner.

20-05 INTERPRETATION OF ESTIMATED PROPOSAL QUANTITIES. An estimate of quantities of work to be done and materials to be furnished under these specifications is given in the proposal. It is the result of careful calculations and is believed to be correct. It is given only as a basis for comparison of proposals and the award of the contract. The owner does not expressly or by implication agree that the actual quantities involved will correspond exactly therewith; nor shall the bidder plead misunderstanding or deception because of such estimates of quantities, or of the character, location, or other conditions pertaining to the work. Payment to the Contractor will be made only for the actual quantities of work performed or materials furnished in accordance with the plans and specifications. It is understood that the quantities may be increased or decreased as hereinafter provided in the subsection titled ALTERATION OF WORK AND QUANTITIES of Section 40 without in any way invalidating the unit bid prices.

20-06 EXAMINATION OF PLANS, SPECIFICATIONS, AND SITE. The bidder is expected to carefully examine the site of the proposed work, the proposal, plans specifications, and contract forms. He shall satisfy himself as to the character, quality, and quantities of work to be performed, materials to be furnished, and as to the requirements of the proposed contract. The submission of a proposal shall be prima facie evidence that the bidder has made such examination and is satisfied as to the conditions to be encountered in performing the work and as to the requirements of the proposed contract, plans, and specifications.

Boring logs and other records of subsurface investigations and tests are available for inspection of bidders. It is understood and agreed that such subsurface information, whether included in the plans, specifications, or otherwise made available to the bidder, was obtained and is intended for the owner's design and estimating purposes only. Such information has been made available for the convenience of all bidders. It is further understood and agreed that each bidder is solely responsible for all assumptions, deductions, or conclusions which he may make or obtain from his/her examination of the boring logs and other records of subsurface investigations and tests that are furnished by the owner.

20-07 PREPARATION OF PROPOSAL. The bidder shall submit his/her proposal on the forms furnished by the owner. All blank spaces in the proposal forms must be correctly filled in where indicated for each and every item for which a quantity is given. The bidder shall state the price (written in ink or typed) both in words and numerals for which he proposes to do each pay item furnished in the proposal. In case of conflict between words and numerals, the words, unless obviously incorrect, shall govern.

The bidder shall sign his/her proposal correctly and in ink. If the proposal is made by an individual, his/her name and post office address must be shown. If made by a partnership, the name and post office address of each member of the partnership must be shown. If made by a corporation, the person signing the proposal shall give the name of the state under the laws of which the corporation was chartered and the name, titles, and business address of the president, secretary, and the treasurer. Anyone signing a proposal as an agent shall file evidence of his/her authority to do so and that the signature is binding upon the firm or corporation.

20-08 IRREGULAR PROPOSALS. Proposals shall be considered irregular for the following reasons:

a. If the proposal is on a form other than that furnished by the owner, or if the owner's form is altered, or if any part of the proposal form is detached.

b. If there are unauthorized additions, conditional or alternate pay items, or irregularities of any kind which make the proposal incomplete, indefinite, or otherwise ambiguous.

c. If the proposal does not contain a unit price for each pay item listed in the proposal, except in the case of authorized alternate pay items, for which the bidder is not required to furnish a unit price.

d. If the proposal contains unit prices that are obviously unbalanced.

e. If the proposal is not accompanied by the proposal guaranty specified by the owner.

The owner reserves the right to reject any irregular proposal and the right to waive technicalities if such waiver is in the best interest of the owner and conforms to local laws and ordinances pertaining to the letting of construction contracts.

20-09 BID GUARANTEE. Each separate proposal shall be accompanied by a certified check, or other specified acceptable collateral, in the amount specified in the proposal form. Such check, or collateral, shall be made payable to the owner.

* *

49 CFR Part 18 provides that for contracts exceeding $100,000, the sponsor should use local bonding policy and requirements provided that the FAA has made a determination that the Government's interest is adequately protected. If such a determination has not been made, the bid guarantee shall be equivalent to five percent of the bid price. It shall consist of a firm commitment such as a bid bond, certified check, or other negotiable instrument accompanying a bid as assurance that the bidder will, upon acceptance of the bid, execute such contractual documents as may be required within the time specified.

* *

20-10 DELIVERY OF PROPOSAL. Each proposal submitted shall be placed in a sealed envelope plainly marked with the project number, location of airport, and name and business address of the bidder on the outside. When sent by mail, preferably registered, the sealed proposal, marked as indicated above, should be enclosed in an additional envelope. No proposal will be considered unless received at the place specified in the advertisement before the time specified for opening all bids. Proposals received after the bid opening time shall be returned to the bidder unopened.

20-11 WITHDRAWAL OR REVISION OF PROPOSALS. A bidder may withdraw or revise (by withdrawal of one proposal and submission of another) a proposal provided that the bidder's request for withdrawal is received by the owner in writing or by telegram before the time specified for opening bids. Revised proposals must be received at the place specified in the advertisement before the time specified for opening all bids.

20-12 PUBLIC OPENING OF PROPOSALS. Proposals shall be opened, and read, publicly at the time and place specified in the advertisement. Bidders, their authorized agents, and other interested persons are invited to attend. Proposals that have been withdrawn (by written or telegraphic request) or received after the time specified for opening bids shall be returned to the bidder unopened.

20-13 DISQUALIFICATION OF BIDDERS. A bidder shall be considered disqualified for any of the following reasons:

a. Submitting more than one proposal from the same partnership, firm, or corporation under the same or different name.

b. Evidence of collusion among bidders. Bidders participating in such collusion shall be disqualified as bidders for any future work of the owner until any such participating bidder has been reinstated by the owner as a qualified bidder.

c. If the bidder is considered to be in "default" for any reason specified in the subsection titled ISSUANCE OF PROPOSAL FORMS of this section.

SECTION 30

AWARD AND EXECUTION OF CONTRACT

30-01 CONSIDERATION OF PROPOSALS. After the proposals are publicly opened and read, they will be compared on the basis of the summation of the products obtained by multiplying the estimated quantities shown in the proposal by the unit bid prices. If a bidder's proposal contains a discrepancy between unit bid prices written in words and unit bid prices written in numbers, the unit price written in words shall govern.

Until the award of a contract is made, the owner reserves the right to reject a bidder's proposal for any of the following reasons:

a. If the proposal is irregular as specified in the subsection titled IRREGULAR PROPOSALS of Section 20.

b. If the bidder is disqualified for any of the reasons specified in the subsection titled DISQUALIFICATION OF BIDDERS of Section 20.

In addition, until the award of a contract is made, the owner reserves the right to reject any or all proposals, waive technicalities, if such waiver is in the best interest of the owner and is in conformance with applicable state and local laws or regulations pertaining to the letting of construction contracts; advertise for new proposals; or proceed with the work otherwise. All such actions shall promote the owner's best interests.

30-02 AWARD OF CONTRACT. The award of a contract, if it is to be awarded, shall be made within 30 calendar days of the date specified for publicly opening proposals, unless otherwise specified herein.

Award of the contract shall be made by the owner to the lowest, qualified bidder whose proposal conforms to the cited requirements of the owner.

* *

For AIP contracts, unless otherwise specified in this subsection, no award shall be made until the FAA has concurred in the sponsor's recommendation to make such award and has approved the sponsor's proposed contract to the extent that such concurrence and approval are required by 49 CFR Part 18.

* *

30-03 CANCELLATION OF AWARD. The owner reserves the right to cancel the award without liability to the bidder, except return of proposal guaranty, at any time before a contract has been fully executed by all parties and is approved by the owner in accordance with the subsection titled APPROVAL OF CONTRACT of this section.

30-04 RETURN OF PROPOSAL GUARANTY. All proposal guaranties, except those of the two lowest bidders, will be returned immediately after the owner has made a comparison of bids as hereinbefore specified in the subsection titled CONSIDERATION OF PROPOSALS of this section. Proposal guaranties of the two lowest bidders will be retained by the owner until such time as an award is made, at which time, the unsuccessful bidder's proposal guaranty will be returned. The successful bidder's proposal guaranty will be returned as soon as the owner receives the contracts bonds as specified in the subsection titled REQUIREMENTS OF CONTRACT BONDS of this section.

30-05 REQUIREMENTS OF CONTRACT BONDS. At the time of the execution of the contract, the successful bidder shall furnish the owner a surety bond or bonds which have been fully executed by the bidder and the surety guaranteeing the performance of the work and the payment of all legal debts that may be incurred by reason of the Contractor's performance of the work. The surety and the form of the bond or bonds shall be acceptable to the owner. Unless otherwise specified in this subsection, the surety bond or bonds shall be in a sum equal to the full amount of the contract.

* *

49 CFR Part 18 provides that sponsors of AIP contracts awarded in excess of $100,000 should use local bonding policy and requirements provided that the FAA has made a determination that the Government's interest is adequately protected. If such a determination has not been made, the performance and payment bonds shall be in the full amount of the awarded contract. For AIP contracts awarded in an amount of $100,000 or less, the sponsor should specify bonding in accordance with local requirements.

* *

30-06 EXECUTION OF CONTRACT. The successful bidder shall sign (execute) the necessary agreements for entering into the contract and return such signed contract to the owner, along with the fully executed surety bond or bonds specified in the subsection titled REQUIREMENTS OF CONTRACT BONDS of this section, within 15 calendar days from the date mailed or otherwise delivered to the successful bidder. If the contract is mailed, special handling is recommended.

30-07 APPROVAL OF CONTRACT. Upon receipt of the contract and contract bond or bonds that have been executed by the successful bidder, the owner shall complete the execution of the contract in accordance with local laws or ordinances, and return the fully executed contract to the Contractor. Delivery of the fully executed contract to the Contractor shall constitute the owner's approval to be bound by the successful bidder's proposal and the terms of the contract.

30-08 FAILURE TO EXECUTE CONTRACT. Failure of the successful bidder to execute the contract and furnish an acceptable surety bond or bonds within the 15 calendar day period specified in the subsection titled REQUIREMENTS OF CONTRACT BONDS of this section shall be just cause for cancellation of the award and forfeiture of the proposal guaranty, not as a penalty, but as liquidation of damages to the owner.

SECTION 40

SCOPE OF WORK

40-01 INTENT OF CONTRACT. The intent of the contract is to provide for construction and completion, in every detail, of the work described. It is further intended that the Contractor shall furnish all labor, materials, equipment, tools, transportation, and supplies required to complete the work in accordance with the plans, specifications, and terms of the contract.

40-02 ALTERATION OF WORK AND QUANTITIES. The owner reserves and shall have the right to make such alterations in the work as may be necessary or desirable to complete the work originally intended in an acceptable manner. Unless otherwise specified herein, the Engineer shall be and is hereby authorized to make such alterations in the work as may increase or decrease the originally awarded contract quantities, provided that the aggregate of such alterations does not change the total contract cost or the total cost of any major contract item by more than 25 percent (total cost being based on the unit prices and estimated quantities in the awarded contract). Alterations which do not exceed the 25 percent limitation shall not invalidate the contract nor release the surety, and the Contractor agrees to accept payment for such alterations as if the altered work had been a part of the original contract. These alterations which are for work within the general scope of the contract shall be covered by "Change Orders" issued by the Engineer. Change orders for altered work shall include extensions of contract time where, in the Engineer's opinion, such extensions are commensurate with the amount and difficulty of added work.

Should the aggregate amount of altered work exceed the 25 percent limitation hereinbefore specified, such excess altered work shall be covered by supplemental agreement. If the owner and the Contractor are unable to agree on a unit adjustment for any contract item that requires a supplemental agreement, the owner reserves the right to terminate the contract with respect to the item and make other arrangements for its completion.

* *

For AIP contracts this subsection should advise the Contractor that all supplemental agreements shall be approved by the FAA and shall include valid wage determinations of the U.S. Secretary of Labor when the amount of the supplemental agreement exceeds $2,000. However, if the Contractor elects to waive the limitations on work that increases or decreases the originally awarded contract or any major contract item by more than 25 percent, the supplemental agreement shall be subject to the same U.S. Secretary of Labor wage determination as was included in the originally awarded contract.

All supplemental agreements shall require consent of the Contractor's surety and separate performance and payment bonds.

* *

40-03 OMITTED ITEMS. The Engineer may, in the owner's best interest, omit from the work any contract item, except major contract items. Major contract items may be omitted by a supplemental agreement. Such omission of contract items shall not invalidate any other contract provision or requirement.

Should a contract item be omitted or otherwise ordered to be nonperformed, the Contractor shall be paid for all work performed toward completion of such item prior to the date of the order to omit such item. Payment for work performed shall be in accordance with the subsection titled PAYMENT FOR OMITTED ITEMS of Section 90.

40-04 EXTRA WORK. Should acceptable completion of the contract require the Contractor to perform an item of work for which no basis of payment has been provided in the original contract or previously issued change orders or supplemental agreements, the same shall be called Extra Work. Extra work that is within the general scope of the contract shall be covered by written change order. Change orders for such extra work shall contain agreed unit prices for performing the change order work in accordance with the

requirements specified in the order, and shall contain any adjustment to the contract time that, in the Engineer's opinion, is necessary for completion of such extra work.

When determined by the Engineer to be in the owner's best interest, he may order the Contractor to proceed with extra work by force account as provided in the subsection titled PAYMENT FOR EXTRA AND FORCE ACCOUNT WORK of Section 90.

Extra work that is necessary for acceptable completion of the project, but is not within the general scope of the work covered by the original contract shall be covered by a Supplemental Agreement as hereinbefore defined in the subsection titled SUPPLEMENTAL AGREEMENT of Section 10.

Any claim for payment of extra work that is not covered by written agreement (change order or supplemental agreement) shall be rejected by the owner.

40-05 MAINTENANCE OF TRAFFIC. It is the explicit intention of the contract that the safety of aircraft, as well as the Contractor's equipment and personnel, is the most important consideration. It is understood and agreed that the Contractor shall provide for the free and unobstructed movement of aircraft in the air operations areas of the airport with respect to his/her own operations and the operations of all his/her subcontractors as specified in the subsection titled LIMITATION OF OPERATIONS of Section 80. It is further understood and agreed that the Contractor shall provide for the uninterrupted operation of visual and electronic signals (including power supplies thereto) used in the guidance of aircraft while operating to, from, and upon the airport as specified in the subsection titled CONTRACTOR'S RESPONSIBILITY FOR UTILITY SERVICE AND FACILITIES OF OTHERS in Section 70.

With respect to his/her own operations and the operations of all his/her subcontractors, the Contractor shall provide marking, lighting, and other acceptable means of identifying: personnel; equipment; vehicles; storage areas; and any work area or condition that may be hazardous to the operation of aircraft, fire-rescue equipment, or maintenance vehicles at the airport.

When the contract requires the maintenance of vehicular traffic on an existing road, street, or highway during the Contractor's performance of work that is otherwise provided for in the contract, plans, and specifications, the Contractor shall keep such road, street, or highway open to all traffic and shall provide such maintenance as may be required to accommodate traffic. The Contractor shall furnish erect, and maintain barricades, warning signs, flagmen, and other traffic control devices in reasonable conformity with the manual of Uniform Traffic Control Devices for Streets and Highways (published by the United States Government Printing Office), unless otherwise specified herein. The Contractor shall also construct and maintain in a safe condition any temporary connections necessary for ingress to and egress from abutting property or intersecting roads, streets or highways. Unless otherwise specified herein, the Contractor will not be required to furnish snow removal for such existing road, street, or highway.

The Contractor shall make his/her own estimate of all labor, materials, equipment, and incidentals necessary for providing the maintenance of aircraft and vehicular traffic as specified in this subsection.

The cost of maintaining the aircraft and vehicular traffic specified in this subsection shall not be measured or paid for directly, but shall be included in the various contract items.

40-06 REMOVAL OF EXISTING STRUCTURES. All existing structures encountered within the established lines, grades, or grading sections shall be removed by the Contractor, unless such existing structures are otherwise specified to be relocated, adjusted up or down, salvaged, abandoned in place, reused in the work or to remain in place. The cost of removing such existing structures shall not be measured or paid for directly, but shall be included in the various contract items.

Should the Contractor encounter an existing structure (above or below ground) in the work for which the disposition is not indicated on the plans, the Engineer shall be notified prior to disturbing such structure. The disposition of existing structures so encountered shall be immediately determined by the Engineer in accordance with the provisions of the contract.

Except as provided in the subsection titled RIGHTS IN AND USE OF MATERIALS FOUND IN THE WORK of this section, it is intended that all existing materials or structures that may be encountered (within the lines, grades, or grading sections established for completion of the work) shall be utilized in the work as

otherwise provided for in the contract and shall remain the property of the owner when so utilized in the work.

* *

The removal of large or complicated existing structures such as box-culverts, underground storage tanks, large underground electrical vaults, large reinforced concrete structures or foundations, or similar existing airport facilities should be provided for in separate technical specifications. Contract pay items should also be provided in the contract proposal to cover payment for such work.

* *

40-07 RIGHTS IN AND USE OF MATERIALS FOUND IN THE WORK. Should the Contractor encounter any material such as (but not restricted to) sand, stone, gravel, slag, or concrete slabs within the established lines, grades, or grading sections, the use of which is intended by the terms of the contract to be either embankment or waste, he may at his/her option either:

a. Use such material in another contract item, providing such use is approved by the Engineer and is in conformance with the contract specifications applicable to such use; or,

b. Remove such material from the site, upon written approval of the Engineer; or

c. Use such material for his/her own temporary construction on site; or,

d. Use such material as intended by the terms of the contract.

Should the Contractor wish to exercise option a., b., or c., he shall request the Engineer's approval in advance of such use.

Should the Engineer approve the Contractor's request to exercise option a., b., or c., the Contractor shall be paid for the excavation or removal of such material at the applicable contract price. The Contractor shall replace, at his/her own expense, such removed or excavated material with an agreed equal volume of material that is acceptable for use in constructing embankment, backfills, or otherwise to the extent that such replacement material is needed to complete the contract work. The Contractor shall not be charged for his/her use of such material so used in the work or removed from the site.

Should the Engineer approve the Contractor's exercise of option a., the Contractor shall be paid, at the applicable contract price, for furnishing and installing such material in accordance with requirements of the contract item in which the material is used.

It is understood and agreed that the Contractor shall make no claim for delays by reason of his/her exercise of option a., b., or c.

The Contractor shall not excavate, remove, or otherwise disturb any material, structure, or part of a structure which is located outside the lines, grades, or grading sections established for the work, except where such excavation or removal is provided for in the contract, plans, or specifications.

40-09 FINAL CLEANING UP. Upon completion of the work and before acceptance and final payment will be made, the Contractor shall remove from the site all machinery, equipment, surplus and discarded materials, rubbish, temporary structures, and stumps or portions of trees. He shall cut all brush and woods within the limits indicated and shall leave the site in a neat and presentable condition. Material cleared from the site and deposited on adjacent property will not be considered as having been disposed of satisfactorily, unless the Contractor has obtained the written permission of such property owner.

SECTION 50

CONTROL OF WORK

50-01 AUTHORITY OF THE ENGINEER. The Engineer shall decide any and all questions which may arise as to the quality and acceptability of materials furnished, work performed, and as to the manner of performance and rate of progress of the work. He shall decide all questions which may arise as to the interpretation of the specifications or plans relating to the work, the fulfillment of the contract on the part of the Contractor, and the rights of different Contractors on the project. The Engineer shall determine the amount and quality of the several kinds of work performed and materials furnished which are to be paid for the under contract.

50-02 CONFORMITY WITH PLANS AND SPECIFICATIONS. All work and all materials furnished shall be in reasonably close conformity with the lines, grades, grading sections, cross sections, dimensions, material requirements, and testing requirements that are specified (including specified tolerances) in the contract, plans or specifications.

If the Engineer finds the materials furnished, work performed, or the finished product not within reasonably close conformity with the plans and specifications but that the portion of the work affected will, in his/her opinion, result in a finished product having a level of safety, economy, durability, and workmanship acceptable to the owner, he will advise the owner of his/her determination that the affected work be accepted and remain in place. In this event, the Engineer will document his/her determination and recommend to the owner a basis of acceptance which will provide for an adjustment in the contract price for the affected portion of the work. The Engineer's determination and recommended contract price adjustments will be based on good engineering judgment and such tests or retests of the affected work as are, in his/her opinion, needed. Changes in the contract price shall be covered by contract modifications (change order or supplemental agreement) as applicable.

If the Engineer finds the materials furnished, work performed, or the finished product are not in reasonably close conformity with the plans and specifications and have resulted in an unacceptable finished product, the affected work or materials shall be removed and replaced or otherwise corrected by and at the expense of the Contractor in accordance with the Engineer's written orders.

For the purpose of this subsection, the term "reasonably close conformity" shall not be construed as waiving the Contractor's responsibility to complete the work in accordance with the contract, plans, and specifications. The term shall not be construed as waiving the Engineer's right to insist on strict compliance with the requirements of the contract, plans, and specifications during the Contractor's prosecution of the work, when, in the Engineer's opinion, such compliance is essential to provide an acceptable finished portion of the work.

For the purpose of this subsection, the term "reasonably close conformity" is also intended to provide the Engineer with the authority to use good engineering judgment in his/her determinations as to acceptance of work that is not in strict conformity but will provide a finished product equal to or better than that intended by the requirements of the contract, plans and specifications.

* *

For AIP contracts, the sponsor should keep the FAA advised of the Engineer's determinations as to acceptance of work that is not in reasonably close conformity to the contract, plans, and specifications. Change orders or supplemental agreements must bear the written approval of the FAA.

* *

50-03 COORDINATION OF CONTRACT, PLANS, AND SPECIFICATIONS. The contract, plans, specifications, and all referenced standards cited are essential parts of the contract requirements. A requirement occurring in one is as binding as though occurring in all. They are intended to be complementary and to describe and provide for a complete work. In case of discrepancy, calculated dimensions will govern

over scaled dimensions; contract technical specifications shall govern over contract general provisions, plans, cited standards for materials or testing, and cited FAA advisory circulars; contract general provisions shall govern over plans, cited standards for materials or testing, and cited FAA advisory circulars; plans shall govern over cited standards for materials or testing and cited FAA advisory circulars.

The Contractor shall not take advantage of any apparent error or omission on the plans or specifications. In the event the Contractor discovers any apparent error or discrepancy, he shall immediately call upon the Engineer for his/her interpretation and decision, and such decision shall be final.

50-04 COOPERATION OF CONTRACTOR. The Contractor will be supplied with two copies each of the plans and specifications. He shall have available on the work at all times one copy each of the plans and specifications. Additional copies of plans and specifications may be obtained by the Contractor for the cost of reproduction.

The Contractor shall give constant attention to the work to facilitate the progress thereof, and he shall cooperate with the Engineer and his/her inspectors and with other contractors in every way possible. The Engineer shall allocate he work and designate the sequence of construction in case of controversy between contractors. The Contractor shall have a competent superintendent on the work at all times who is fully authorized as his/her agent on the work. The superintendent shall be capable of reading and thoroughly understanding the plans and specifications and shall receive and fulfill instructions from the Engineer or his/her authorized representative.

50-05 COOPERATION BETWEEN CONTRACTORS. The owner reserves the right to contract for and perform other or additional work on or near the work covered by this contract.

When separate contracts are let within the limits of any one project, each Contractor shall conduct his/her work so as not to interfere with or hinder the progress of completion of the work being performed by other Contractors. Contractors working on the same project shall cooperate with each other as directed.

Each Contractor involved shall assume all liability, financial or otherwise, in connection with his/her contract and shall protect and save harmless the owner from any and all damages or claims that may arise because of inconvenience, delays, or loss experienced by him because of the presence and operations of other Contractors working within the limits of the same project.

The Contractor shall arrange his/her work and shall place and dispose of the materials being used so as not to interfere with the operations of the other Contractors within the limits of the same project. He shall join his/her work with that of the others in an acceptable manner and shall perform it in proper sequence to that of the others.

50-06 CONSTRUCTION LAYOUT AND STAKES. The Engineer shall establish horizontal and vertical control only. The Contractor must establish all layout required for the construction of the work. Such stakes and markings as the Engineer may set for either his/her own or the Contractor's guidance shall be preserved by the Contractor. In case of negligence on the part of the Contractor, or his/her employees, resulting in the destruction of such stakes or markings, an amount equal to the cost of replacing the same may be deducted from subsequent estimates due the Contractor at the discretion of the Engineer.

50-07 AUTOMATICALLY CONTROLLED EQUIPMENT. Whenever batching or mixing plant equipment is required to be operated automatically under the contract and a breakdown or malfunction of the automatic controls occurs, the equipment may be operated manually or by other methods for a period 48 hours following the breakdown or malfunction, provided this method of operations will product results which conform to all other requirements of the contract.

50-08 AUTHORITY AND DUTIES OF INSPECTORS. Inspectors employed by the owner shall be authorized to inspect all work done and all material furnished. Such inspection may extend to all or any part of the work and to the preparation, fabrication, or manufacture of the materials to be used. Inspectors are not authorized to revoke, alter, or waive any provision of the contract. Inspectors are not authorized to issue instructions contrary to the plans and specifications or to act as foreman for the Contractor.

Inspectors employed by the owner are authorized to notify the Contractor or his/her representatives of any failure of the work or materials to conform to the requirements of the contract, plans, or specifications and

to reject such nonconforming materials in question until such issues can be referred to the Engineer for his/her decision.

50-09 INSPECTION OF THE WORK. All materials and each part or detail of the work shall be subject to inspection by the Engineer. The Engineer shall be allowed access to all parts of the work and shall be furnished with such information and assistance by the Contractor as is required to make a complete and detailed inspection.

If the Engineer requests it, the Contractor, at any time before acceptance of the work, shall remove or uncover such portions of the finished work as may be directed. After examination, the Contractor shall restore said portions of the work to the standard required by the specifications. Should the work thus exposed or examined prove acceptable, the uncovering, or removing, and the replacing of the covering or making good of the parts removed will be paid for as extra work; but should the work so exposed or examined prove unacceptable, the uncovering, or removing, and the replacing of the covering or making good of the parts removed will be at the Contractor's expense.

Any work done or materials used without supervision or inspection by an authorized representative of the owner may be ordered removed and replaced at the Contractor's expense unless the owner's representative failed to inspect after having been given reasonable notice in writing that the work was to be performed.

Should the contract work include relocation, adjustment, or any other modification to existing facilities, not the property of the (contract) owner, authorized representatives of the owners of such facilities shall have the right to inspect such work. Such inspection shall in no sense make any facility owner a party to the contract, and shall in no way interfere with the rights of the parties to this contract.

50-10 REMOVAL OF UNACCEPTABLE AND UNAUTHORIZED WORK. All work which does not form to the requirements of the contract, plans, and specifications will be considered unacceptable, unless otherwise determined acceptable by the Engineer as provided in the subsection titled CONFORMITY WITH PLANS AND SPECIFICATIONS of this section.

Unacceptable work, whether the result of poor workmanship, use of defective materials, damage through carelessness, or any other cause found to exist prior to the final acceptance of the work, shall be removed immediately and replaced in an acceptable manner in accordance with the provisions of the subsection titled CONTRACTOR'S RESPONSIBILITY FOR WORK of Section 70.

Work done contrary to the instructions of the Engineer, work done beyond the lines shown on the plans or as given, except as herein specified, or any extra work done without authority, will be considered as unauthorized and will not be paid for under the provisions of the contract. Work so done may be ordered removed or replaced at the Contractor's expense.

Upon failure on the part of the Contractor to comply forthwith with any order of the Engineer made under the provisions of this subsection, the Engineer will have authority to cause unacceptable work to be remedied or removed and replaced and unauthorized work to be removed and to deduct the costs (incurred by the owner) from any monies due or to become due the Contractor.

50-11 LOAD RESTRICTIONS. The Contractor shall comply with all legal load restrictions in the hauling of materials on public roads beyond the limits of the work. A special permit will not relieve the Contractor of liability for damage which may result from the moving of material or equipment.

The operation of equipment of such weight or so loaded as to cause damage to structures or to any other type of construction will not be permitted. Hauling of materials over the base course or surface course under construction shall be limited as directed. No loads will be permitted on a concrete pavement, base, or structure before the expiration of the curing period. The Contractor shall be responsible for all damage done by his/her hauling equipment and shall correct such damage at his/her own expense.

50-12 MAINTENANCE DURING CONSTRUCTION. The Contractor shall maintain the work during construction and until the work is accepted. This maintenance shall constitute continuous and effective work prosecuted day by day, with adequate equipment and forces so that the work is maintained in satisfactory condition at all times.

In the case of a contract for the placing of a course upon a course or subgrade previously constructed, the Contractor shall maintain the previous course or subgrade during all construction operations.

All costs of maintenance work during construction and before the project is accepted shall be included in the unit prices bid on the various contract items, and the Contractor will not be paid an additional amount for such work.

50-13 FAILURE TO MAINTAIN THE WORK. Should the Contractor at any time fail to maintain the work as provided in the subsection titled MAINTENANCE DURING CONSTRUCTION of this section, the Engineer shall immediately notify the Contractor of such noncompliance. Such notification shall specify a reasonable time within which the Contractor shall be required to remedy such unsatisfactory maintenance condition. The time specified will give due consideration to the exigency that exists.

Should the Contractor fail to respond to the Engineer's notification, the Engineer may suspend any work necessary for the owner to correct such unsatisfactory maintenance condition, depending on the exigency that exists. Any maintenance cost incurred by the owner, shall be deducted from monies due or to become due the Contractor.

50-14 PARTIAL ACCEPTANCE. If at any time during the prosecution of the project the Contractor substantially completes a usable unit or portion of the work, the occupancy of which will benefit the owner, he may request the Engineer to make final inspection of that unit. If the Engineer finds upon inspection that the unit has been satisfactorily completed in compliance with the contract, he may accept it as being completed, and the Contractor may be relieved of further responsibility for that unit. Such partial acceptance and beneficial occupancy by the owner shall not void or alter any provision of the contract.

50-15 FINAL ACCEPTANCE. Upon due notice from the Contractor of presumptive completion of the entire project, the Engineer and owner will make an inspection. If all construction provided for and contemplated by the contract is found to be completed in accordance with the contract, plans, and specifications, such inspection shall constitute the final inspection. The Engineer shall notify the Contractor in writing of final acceptance as of the date of the final inspection.

If, however, the inspection discloses any work, in whole or in part, as being unsatisfactory, the Engineer will give the Contractor the necessary instructions for correction of same and the Contractor shall immediately comply with and execute such instructions. Upon correction of the work, another inspection will be made which shall constitute the final inspection, provided the work has been satisfactorily completed. In such event, the Engineer will make the final acceptance and notify the Contractor in writing of this acceptance as of the date of final inspection.

50-16 CLAIMS FOR ADJUSTMENT AND DISPUTES. If for any reason the Contractor deems that additional compensation is due him for work or materials not clearly provided for in the contract, plans, or specifications or previously authorized as extra work, he shall notify the Engineer in writing of his/her intention to claim such additional compensation before he begins the work on which he bases the claim. If such notification is not given or the Engineer is not afforded proper opportunity by the Contractor for keeping strict account of actual cost as required, then the Contractor hereby agrees to waive any claim for such additional compensation. Such notice by the Contractor and the fact that the Engineer has kept account of the cost of the work shall not in any way be construed as proving or substantiating the validity of the claim. When the work on which the claim for additional compensation is based has been completed, the Contractor shall, within 10 calendar days, submit his/her written claim to the Engineer who will present it to the owner for consideration in accordance with local laws or ordinances.

Nothing in this subsection shall be construed as a waiver of the Contractor's right to dispute final payment based on differences in measurements or computations.

50-17 COST REDUCTION INCENTIVE. The provisions of this subsection will apply only to contracts awarded to the lowest bidder pursuant to competitive bidding.

On projects with original contract amounts in excess of $100,000, the Contractor may submit to the Engineer, in writing, proposals for modifying the plans, specifications or other requirements of the contract for the sole purpose of reducing the cost of construction. The cost reduction proposal shall not impair, in any manner, the essential functions or characteristics of the project, including but not limited to service life,

economy of operation, ease of maintenance, desired appearance, design and safety standards. This provision shall not apply unless the proposal submitted is specifically identified by the Contractor as being presented for consideration as a value engineering proposal.

Not eligible for cost reduction proposals are changes in the basic design of a pavement type, runway and taxiway lighting, visual aids, hydraulic capacity of drainage facilities, or changes in grade or alignment that reduce the geometric standards of the project.

As a minimum, the following information shall be submitted by the Contractor with each proposal:

a. A description of both existing contract requirements for performing the work and the proposed changes, with a discussion of the comparative advantages and disadvantages of each;

b. An itemization of the contract requirements that must be changed if the proposal is adopted;

c. A detailed estimate of the cost of performing the work under the existing contract and under the proposed changes;

d. A statement of the time by which a change order adopting the proposal must be issued;

e. A statement of the effect adoption of the proposal will have on the time for completion of the contract; and

f. The contract items of work affected by the proposed changes, including any quantity variation attributable to them.

The Contractor may withdraw, in whole or in part, any cost reduction proposal not accepted by the Engineer, within the period specified in the proposal. The provisions of this subsection shall not be construed to require the Engineer to consider any cost reduction proposal which may be submitted.

The Contractor shall continue to perform the work in accordance with the requirements of the contract until a change order incorporating the cost reduction proposal has been issued. If a change order has not been issued by the date upon which the Contractor's cost reduction proposal specifies that a decision should be made, or such other date as the Contractor may subsequently have requested in writing, such cost reduction proposal shall be deemed rejected.

The Engineer shall be the sole judge of the acceptability of a cost reduction proposal and of the estimated net savings from the adoption of all or any part of such proposal. In determining the estimated net savings, the Engineer may disregard the contract bid prices if, in the Engineer's judgement such prices do not represent a fair measure of the value of the work to be performed or deleted.

The owner may require the Contractor to share in the owner's costs of investigating a cost reduction proposal submitted by the Contractor as a condition of considering such proposal. Where such a condition is imposed, the Contractor shall acknowledge acceptance of it in writing. Such acceptance shall constitute full authority for the owner to deduct the cost of investigating a cost reduction proposal from amounts payable to the Contractor under the contract.

If the Contractor's cost reduction proposal is accepted in whole or in part, such acceptance will be by a contract change order which shall specifically state that it is executed pursuant to this subsection. Such change order shall incorporate the changes in the plans and specifications which are necessary to permit the cost reduction proposal or such part of it as has been accepted and shall include any conditions upon which the Engineer's approval is based. The change order shall also set forth the estimated net savings attributable to the cost reduction proposal. The net savings shall be determined as the difference in costs between the original contract costs for the involved work items and the costs occurring as a result of the proposed change. The change order shall also establish the net savings agreed upon and shall provide for adjustment in the contract price that will divide the net savings equally between the Contractor and the Owner.

The Contractor's 50 percent share of the net savings shall constitute full compensation to the Contractor for the cost reduction proposal and the performance of the work.

Acceptance of the cost-reduction proposal and performance of the cost-reduction work shall not extend the time of completion of the contract unless specifically provided for in the contract change order.

* *

Use of this subsection in project specifications is at the option of the owner/Engineer.

This subsection should not be incorporated into project specifications if State or local laws prohibit its use or if the project does not lend itself to value engineering.

* *

SECTION 60

CONTROL OF MATERIALS

60-01 SOURCE OF SUPPLY AND QUALITY REQUIREMENTS. The materials used on the work shall conform to the requirements of the contract, plans, and specifications. Unless otherwise specified, such materials that are manufactured or processed shall be new (as compared to used or reprocessed).

In order to expedite the inspection and testing of materials, the Contractor shall furnish complete statements to the Engineer as to the origin, composition, and manufacture of all materials to be used in the work. Such statements shall be furnished promptly after execution of the contract but, in all cases, prior to delivery of such materials.

At the Engineer's option, materials may be approved at the source of supply before delivery is stated. If it is found after trial that sources of supply for previously approved materials do not produce specified products, the Contractor shall furnish materials from other sources.

The Contractor shall furnish airport lighting equipment that conforms to the requirements of cited materials specifications. In addition, where an FAA specification for airport lighting equipment is cited in the plans or specifications, the Contractor shall furnish such equipment that is:

a. Listed in FAA Advisory Circular (AC) 150/5345-1, Approved Airport Equipment, that is in effect on the date of advertisement; and,

b. Produced by the manufacturer qualified (by FAA) to produce such specified and listed equipment.

The following airport lighting equipment is required for this contract and is to be furnished by the Contractor in accordance with the requirements of this subsection:

EQUIPMENT NAME
CITED FAA SPECIFICATIONS
EFFECTIVE FAA AC OR APPROVAL LETTER FOR EQUIPMENT AND MANUFACTURER

* *

To avoid errors, the design Engineer should furnish the above listing after having conformed the list to those specifications cited on the plans or in the technical specifications. Both the individual FAA material specifications and the AC 150/5345-1, Approved Airport Equipment, should be listed to indicate the edition that is effective on the date the contract is advertised.

* *

60-02 SAMPLES, TESTS, AND CITED SPECIFICATIONS. All materials used in the work shall be inspected, tested, and approved by the Engineer before incorporation in the work. Any work in which untested materials are used without approval or written permission of the Engineer shall be performed at the Contractor's risk. Materials found to be unacceptable and unauthorized will not be paid for and, if directed by the Engineer, shall be removed at the Contractor's expense. Unless otherwise designated, tests in accordance with the cited standard methods of AASHTO or ASTM which are current on the date of advertisement for bids will be made by and at the expense of the owner. Samples will be taken by a qualified representative of the owner. All materials being used are subject to inspection, test, or rejection at any time prior to or during incorporation into the work. Copies of all tests will be furnished to the Contractor's representative at his/her request.

60-03 CERTIFICATION OF COMPLIANCE. The Engineer may permit the use, prior to sampling and testing, of certain materials or assemblies when accompanied by manufacturer's certificates of compliance stating that such materials or assemblies fully comply with the requirements of the contract. The certificate shall be signed by the manufacturer. Each lot of such materials or assemblies delivered to the work must be accompanied by a certificate of compliance in which the lot is clearly identified.

Materials or assemblies used on the basis of certificates of compliance may be sampled and tested at any time and if found not to be in conformity with contract requirements will be subject to rejection whether in place or not.

The form and distribution of certificates of compliance shall be as approved by the Engineer.

When a material or assembly is specified by "brand name or equal" and the Contractor elects to furnish the specified "brand name," the Contractor shall be required to furnish the manufacturer's certificate of compliance for each lot of such material or assembly delivered to the work. Such certificate of compliance shall clearly identify each lot delivered and shall certify as to:

a. Conformance to the specified performance, testing, quality or dimensional requirements; and,

b. Suitability of the material or assembly for the use intended in the contract work.

Should the Contractor propose to furnish an "or equal" material or assembly, he shall furnish the manufacturer's certificates of compliance as hereinbefore described for the specified brand name material or assembly. However, the Engineer shall be the sole judge as to whether the proposed "or equal" is suitable for use in the work.

The Engineer reserves the right to refuse permission for use of materials or assemblies on the basis of certificates of compliance.

* *

When it is necessary to specify a material or assembly by "brand name or equal," the technical requirements (performance, testing, quality, or dimensions) must be accurately described in enough detail to ensure a suitable product while not restricting competition unduly.

* *

60-04 PLANT INSPECTION. The Engineer or his/her authorized representative may inspect, at its source, any specified material or assembly to be used in the work. Manufacturing plants may be inspected from time to time for the purpose of determining compliance with specified manufacturing methods or materials to be used in the work and to obtain samples required for his/her acceptance of the material or assembly.

Should the Engineer conduct plant inspections, the following conditions shall exist:

a. The Engineer shall have the cooperation and assistance of the Contractor and the producer with whom he has contracted for materials.

b. The Engineer shall have full entry at all reasonable times to such parts of the plant that concern the manufacture or production of the materials being furnished.

c. If required by the Engineer, the Contractor shall arrange for adequate office or working space that may be reasonably needed for conducting plant inspections. Office or working space should be conveniently located with respect to the plant.

It is understood and agreed that the owner shall have the right to retest any material which has been tested and approved at the source of supply after it has been delivered to the site. The Engineer shall have the right to reject only material which, when retested, does not meet the requirements of the contract, plans, or specifications.

60-05 ENGINEER'S FIELD OFFICE AND LABORATORY. When specified and provided for as a contract item, the Contractor shall furnish a building for the exclusive use of the Engineer as a field office and field testing laboratory. The building shall be furnished and maintained by the Contractor as specified herein and shall become property of the Contractor when the contract work is completed.

* *

Requirements for specifying the Engineer's field office and laboratory should be coordinated with the owner and the Engineer since such facilities are not needed for all airport construction projects.

* *

60-06 STORAGE OF MATERIALS. Materials shall be so stored as to assure the preservation of their quality and fitness for the work. Stored materials, even though approved before storage, may again be inspected prior to their use in the work. Stored materials shall be located so as to facilitate their prompt inspection. The Contractor shall coordinate the storage of all materials with the Engineer. Materials to be stored on airport property shall not create an obstruction to air navigation nor shall they interfere with the free and unobstructed movement of aircraft. Unless otherwise shown on the plans, the storage of materials and the location of the Contractor's plant and parked equipment or vehicles shall be as directed by the Engineer. Private property shall not be used for storage purposes without written permission of the owner or lessee of such property. The Contractor shall make all arrangements and bear all expenses for the storage of materials on private property. Upon request, the Contractor shall furnish the Engineer a copy of the property owner's permission.

All storage sites on private or airport property shall be restored to their original condition by the Contractor at his/her entire expense, except as otherwise agreed to (in writing) by the owner or lessee of the property.

60-07 UNACCEPTABLE MATERIALS. Any material or assembly that does not conform to the requirements of the contract, plans, or specifications shall be considered unacceptable and shall be rejected. The Contractor shall remove any rejected material or assembly from the site of the work, unless otherwise instructed by the Engineer.

No rejected material or assembly, the defects of which have been corrected by the Contractor, shall not be returned to the site of the work until such time as the Engineer has approved its used in the work.

60-08 OWNER-FURNISHED MATERIALS. The Contractor shall furnish all materials required to complete the work, except those specified herein (if any) to be furnished by the owner. Owner-furnished materials shall be made available to the Contractor at the location specified herein.

All costs of handling, transportation from the specified location to the site of work, storage, and installing owner-furnished materials shall be included in the unit price bid for the contract item in which such owner-furnished material is used.

After any owner-furnished material has been delivered to the location specified, the Contractor shall be responsible for any demurrage, damage, loss, or other deficiencies which may occur during the Contractor's handling, storage, or use of such owner-furnished material. The owner will deduct from any monies due or to become due the Contractor any cost incurred by the owner in making good such loss due to the Contractor's handling, storage, or use of owner-furnished materials.

SECTION 70

LEGAL REGULATIONS AND RESPONSIBILITY TO PUBLIC

70-01 LAWS TO BE OBSERVED. The Contractor shall keep fully informed of all Federal and state laws, all local laws, ordinances, and regulations and all orders and decrees of bodies or tribunals having any jurisdiction or authority, which in any manner affect those engaged or employed on the work, or which in any way affect the conduct of the work. He shall at all times observe and comply with all such laws, ordinances, regulations, orders, and decrees; and shall protect and indemnify the owner and all his/her officers, agents, or servants against any claim or liability arising from or based on the violation of any such law, ordinance, regulation, order, or decree, whether by himself or his/her employees.

70-02 PERMITS, LICENSES, AND TAXES. The Contractor shall procure all permits and licenses, pay all charges, fees, and taxes, and give all notices necessary and incidental to the due and lawful prosecution of the work.

70-03 PATENTED DEVICES, MATERIALS, AND PROCESSES. If the Contractor is required or desires to use any design, device, material, or process covered by letters of patent or copyright, he shall provide for such use by suitable legal agreement with the patentee or owner. The Contractor and the surety shall indemnify and save harmless the owner, any third party, or political subdivision from any and all claims for infringement by reason of the use of any such patented design, device, material or process, or any trademark or copyright, and shall indemnify the owner for any costs, expenses, and damages which it may be obliged to pay by reason of an infringement, at any time during the prosecution or after the completion of the work.

70-04 RESTORATION OF SURFACES DISTURBED BY OTHERS. The owner reserves the right to authorize the construction, reconstruction, or maintenance of any public or private utility service, FAA or National Oceanic and Atmospheric Administration (NOAA) facility, or a utility service of another government agency at any time during the progress of the work. To the extent that such construction, reconstruction, or maintenance has been coordinated with the owner, such authorized work (by others) is indicated as follows:

Owner (Utility or Other Facility)
Location (See Plan Sheet No.)
Person to Contact (Name, Title, Address and Phone)

Except as listed above, the Contractor shall not permit any individual, firm, or corporation to excavate or otherwise disturb such utility services or facilities located within the limits of the work without the written permission of the Engineer.

Should the owner of public or private utility service, FAA, or NOAA facility, or a utility service of another government agency be authorized to construct, reconstruct, or maintain such utility service or facility during the progress of the work, the Contractor shall cooperate with such owners by arranging and performing the work in this contract so as to facilitate such construction, reconstruction or maintenance by others whether or not such work by others is listed above. When ordered as extra work by the Engineer, the Contractor shall make all necessary repairs to the work which are due to such authorized work by others, unless otherwise provided for in the contract, plans, or specifications. It is understood and agreed that the Contractor shall not be entitled to make any claim for damages due to such authorized work by others or for any delay to the work resulting from such authorized work.

* *

It is the intention of this subsection to provide for both foreseen and unforeseen work by owners of utility services and other facilities on the airport. Such owners have legal rights and obligations under some form of easement with the airport owner. Every effort should be made, during the initial design phase, to coordinate the proposed contract work with such owners so that their rights and obligations are provided for the in the contract, plans, and specifications. Where there is conflict between an existing utility service (or facility) and the

proposed work or where the owner of the utility or facility must perform work to construct, reconstruct, or maintain his/her utility or facility, such work should be listed in this subsection and provided for in the contract, plans and specifications. In addition, all known utility services or facilities that are within the limits of the proposed work should be shown on the plans (regardless of whether or not there is a conflict of work to be performed by the owner) with enough detailed information to indicate the lack of conflicts.

* *

70-05 FEDERAL AID PARTICIPATION. For AIP contracts, the United States Government has agreed to reimburse the owner for some portion of the contract costs. Such reimbursement is made from time to time upon the owner's (sponsor's) request to the FAA. In consideration of the United Sates Government's (FAA's) agreement with the owner, the owner has included provisions in this contract pursuant to the requirements of the Airport Improvement Act of 1982, as amended by the Airport and Airway Safety and Capacity Expansion Act of 1987, and the Rules and Regulations of the FAA that pertain to the work.

As required by the Act, the contract work is subject to the inspection and approval of duly authorized representatives of the Administrator, FAA, and is further subject to those provisions of the rules and regulations that are cited in the contract, plans, or specifications.

No requirement of the Act, the rules and regulations implementing the Act, or this contract shall be construed as making the Federal Government a party to the contract nor will any such requirement interfere, in any way, with the rights of either party to the contract.

70-06 SANITARY, HEALTH, AND SAFETY PROVISIONS. The Contractor shall provide and maintain in a neat, sanitary condition such accommodations for the use of his/her employees as may be necessary to comply with the requirements of the state and local Board of Health, or of other bodies or tribunals having jurisdiction.

Attention is directed to Federal, state, and local laws, rules and regulations concerning construction safety and health standards. The Contractor shall not require any worker to work in surroundings or under conditions are unsanitary, hazardous, or dangerous to his/her health or safety.

70-07 PUBLIC CONVENIENCE AND SAFETY. The Contractor shall control his/her operations and those of his/her subcontractors and all suppliers, to assure the least inconvenience to the traveling public. Under all circumstances, safety shall be the most important consideration.

The Contractor shall maintain the free and unobstructed movement of aircraft and vehicular traffic with respect to his/her own operations and those of his/her subcontractors and all suppliers in accordance with the subsection titled MAINTENANCE OF TRAFFIC of Section 40 hereinbefore specified and shall limit such operations for the convenience and safety of the traveling public as specified in the subsection titled LIMITATION OF OPERATIONS of Section 80 hereinafter.

70-08 BARRICADES, WARNING SIGNS, AND HAZARD MARKINGS. The Contractor shall furnish, erect, and maintain all barricades, warning signs, and markings for hazards necessary to protect the public and the work. When used during periods of darkness, such barricades, warning signs, and hazard markings shall be suitably illuminated.

For vehicular and pedestrian traffic, the Contractor shall furnish, erect, and maintain barricades, warning signs, lights and other traffic control devices in reasonable conformity with the Manual of Uniform Traffic Control Devices for Streets and Highways (published by the United States Government Printing Office).

When the work requires closing an air operations area of the airport or portion of such area, the Contractor shall furnish, erect, and maintain temporary markings and associated lighting conforming to the requirements of AC 150/5340-1, Marking of Paved Areas on Airports.

The Contractor shall furnish, erect, and maintain markings and associated lighting of open trenches, excavations, temporary stock piles, and his/her parked construction equipment that may be hazardous to the operation of emergency fire-rescue or maintenance vehicles on the airport in reasonable conformance to AC 150/5370-2, Operational Safety on Airports During Construction Activity.

The Contractor shall identify each motorized vehicle or piece of construction equipment in reasonable conformance to AC 150/5370-2.

The Contractor shall furnish and erect all barricades, warning signs, and markings for hazards prior to commencing work which requires such erection and shall maintain the barricades, warning signs, and markings for hazards until their dismantling is directed by the Engineer.

Open-flame type lights shall not be permitted within the air operations areas of the airport.

* *

To ensure that the contract contains current information as to barricades and warning signs, marking of paved areas on airports, and safety on airports during construction, the latest editions of the cited publications should be specified. Some owners will prefer to extract the provisions of the cited publications that are applicable to the contract specifications being prepared.

* *

70-09 USE OF EXPLOSIVES. When the use of explosives is necessary for the prosecution of the work, the Contractor shall exercise the utmost care not to endanger life or property, including new work. The Contractor shall be responsible for all damage resulting from the use of explosives.

All explosives shall be stored in a secure manner in compliance with all laws and ordinances, and all such storage places shall be clearly marked. Where no local laws or ordinances apply, storage shall be provided satisfactory to the Engineer and, in general, not closer than 1,000 feet (300 m) from the work or from any building, road, or other place of human occupancy.

The Contractor shall notify each property owner and public utility company having structures or facilities in proximity to the site of the work of his/her intention to use explosives. Such notice shall be given sufficiently in advance to enable them to take such steps as they may deem necessary to protect their property from injury.

The use of electrical blasting caps shall not be permitted on or within 1,000 feet (300 m) of the airport property.

70-10 PROTECTION AND RESTORATION OF PROPERTY AND LANDSCAPE. The Contractor shall be responsible for the preservation of all public and private property, and shall protect carefully from disturbance or damage all land monuments and property markers until the Engineer has witnessed or otherwise referenced their location and shall not move them until directed.

The Contractor shall be responsible for all damage or injury to property of any character, during the prosecution of the work, resulting from any act, omission, neglect, or misconduct in his/her manner or method of executing the work, or at any time due to defective work or materials, and said responsibility will not be released until the project shall have been completed and accepted.

When or where any direct or indirect damage or injury is done to public or private property by or on account of any act, omission, neglect, or misconduct in the execution of the work, or in consequence of the nonexecution thereof by the Contractor, he shall restore, at his/her own expense, such property to a condition similar or equal to that existing before such damage or injury was done, by repairing, or otherwise restoring as may be directed, or he shall make good such damage or injury in an acceptable manner.

70-11 RESPONSIBILITY FOR DAMAGE CLAIMS. The Contractor shall indemnify and save harmless the Engineer and the owner and their officers, and employees from all suits actions, or claims of any character brought because of any injuries or damage received or sustained by any person, persons, or property on account of the operations of the Contractor; or on account of or in consequence of any neglect in safeguarding the work; or through use of unacceptable materials in constructing the work; or because of any act or omission, neglect, or misconduct of said Contractor; or because of any claims or amounts recovered from any infringements of patent, trademark, or copyright; or from any claims or amounts arising or recovered under the "Workmen's Compensation Act," or any other law, ordinance, order, or decree. Money due the Contractor under and by virtue of his/her contract as may be considered necessary by the owner for such purpose may be retained for the use of the owner or, in case no money is due, his/her surety may be held

until such suit or suits, action or actions, claim or claims for injuries or damages as aforesaid shall have been settled and suitable evidence to that effect furnished to the owner, except that money due the Contractor will not be withheld when the Contractor produces satisfactory evidence that he is adequately protected by public liability and property damage insurance.

70-12 THIRD PARTY BENEFICIARY CLAUSE. It is specifically agreed between the parties executing the contract that it is not intended by any of the provisions of any part of the contract to create the public or any member thereof a third party beneficiary or to authorize anyone not a party to the contract to maintain a suit for personal injuries or property damage pursuant to the terms or provisions of the contract.

70-13 OPENING SECTIONS OF THE WORK TO TRAFFIC. Should it be necessary for the Contractor to complete portions of the contract work for the beneficial occupancy of the owner prior to completion of the entire contract, such "phasing" of the work shall be specified herein and indicated on the plans. When so specified, the Contractor shall complete such portions of the work on or before the date specified or as otherwise specified. The Contractor shall make his/her own estimate of the difficulties involved in arranging his/her work to permit such beneficial occupancy by the owner as described below:

Phase or Description
Required Date or Sequence of Owner's Beneficial Occupancy
Work Shown on Plan Sheet _

* *

The owner's requirements for "phasing" the work should be coordinated with certain agencies having an interest in operational capability of the airport. Such coordination must be accomplished at the earliest possible time. See AC 150/5300-9, Predesign, Prebid, and Preconstruction Conferences for Airport Grant Projects, for more information.

* *

Upon completion of any portion of the work listed above, such portion shall be accepted by the owner in accordance with the subsection titled PARTIAL ACCEPTANCE of Section 50.

No portion of the work may be opened by the Contractor for public use until ordered by the Engineer in writing. Should it become necessary to open a portion of the work to public traffic on a temporary or intermittent basis, such openings shall be made when, in the opinion of the Engineer, such portion of the work is in an acceptable condition to support the intended traffic. Temporary or intermittent openings are considered to be inherent in the work and shall not constitute either acceptance of the portion of the work so opened or a waiver of any provision of the contract. Any damage to the portion of the work so opened that is not attributable to traffic which is permitted by the owner shall be repaired by the Contractor at his/her expense.

The Contractor shall make his/her own estimate of the inherent difficulties involved in completing the work under the conditions herein described and shall not claim any added compensation by reason of delay or increased cost due to opening a portion of the contract work.

70-14 CONTRACTOR'S RESPONSIBILITY FOR WORK. Until the Engineer's final written acceptance of the entire completed work, excepting only those portions of the work accepted in accordance with the subsection titled PARTIAL ACCEPTANCE of Section 50, the Contractor shall have the charge and care thereof and shall take every precaution against injury or damage to any part due to the action of the elements or from any other cause, whether arising from the execution or from the nonexecution of the work. The Contractor shall rebuild, repair, restore, and make good all injuries or damages to any portion of the work occasioned by any of the above causes before final acceptance and shall bear the expense thereof except damage to the work due to unforeseeable causes beyond the control of and without the fault or negligence of the Contractor, including but not restricted to acts of God such as earthquake, tidal wave, tornado, hurricane or other cataclysmic phenomenon of nature, or acts of the public enemy or of government authorities.

If the work is suspended for any cause whatever, the Contractor shall be responsible for the work and shall take such precautions necessary to prevent damage to the work. The Contractor shall provide for normal drainage and shall erect necessary temporary structures, signs, or other facilities at his/her expense. During

such period of suspension of work, the Contractor shall properly and continuously maintain in an acceptable growing condition all living material in newly established planting, seedings, and soddings furnished under his/her contract, and shall take adequate precautions to protect new tree growth and other important vegetative growth against injury.

70-15 CONTRACTOR'S RESPONSIBILITY FOR UTILITY SERVICE AND FACILITIES OF OTHERS. As provided in the subsection titled RESTORATION OF SURFACES DISTURBED BY OTHERS of this section, the Contractor shall cooperate with the owner of any public or private utility service, FAA or NOAA, or a utility service of another government agency that may be authorized by the owner to construct, reconstruct or maintain such utility services or facilities during the progress of the work. In addition, the Contractor shall control his/her operations to prevent the unscheduled interruption of such utility services and facilities.

To the extent that such public or private utility services, FAA, or NOAA facilities, or utility services of another governmental agency are known to exist within the limits of the contract work, the approximate locations have been indicated on the plans and the owners are indicated as follows:

Utility Service or Facility
Person to Contract (Name, Title, Address, & Phone)
Owner's Emergency Contact (Phone)

* *

It is intended that the plans will show the approximate location of the utilities or facilities known to exist within the limits of the contract work. It is also intended that the proposed contract plans and specifications be coordinated with the various owners at the earliest possible time to avoid overlooking utility conflicts in the design and to obtain the best possible information needed to protect such utility services or facilities from damage resulting from the Contractor's operations. Where conflicts are indicated during the coordination, they should be resolved by the airport owner and the utility owner, in accordance with existing legal agreements, by providing for work in the proposed contract or by the utility owner. In such cases of conflict, regardless of how the conflict is resolved, the airport owner and utility owner should also be advised of the need to furnish the best information possible as to location of the utility service or facility to ensure protection during the proposed contract work.

* *

It is understood and agreed that the owner does not guarantee the accuracy or the completeness of the location information relating to existing utility services, facilities, or structures that may be shown on the plans or encountered in the work. Any inaccuracy or omission in such information shall not relieve the Contractor of his/her responsibility to protect such existing features from damage or unscheduled interruption of service.

It is further understood and agreed that the Contractor shall, upon execution of the contract, notify the owners of all utility services or other facilities of his/her plan of operations. Such notification shall be in writing addressed to THE PERSON TO CONTACT as provided hereinbefore in this subsection and the subsection titled RESTORATION OF SURFACES DISTURBED BY OTHERS of this section. A copy of each notification shall be given to the Engineer.

In addition to the general written notification hereinbefore provided, it shall be the responsibility of the Contractor to keep such individual owners advised of changes in his/her plan of operations that would affect such owners.

Prior to commencing the work in the general vicinity of an existing utility service or facility, the Contractor shall again notify each such owner of his/her plan of operation. If, in the Contractor's opinion, the owner's assistance is needed to locate the utility service or facility or the presence of a representative of the owner is desirable to observe the work, such advice should be included in the notification. Such notification shall be given by the most expeditious means to reach the utility owner's PERSON TO CONTACT no later than two normal business days prior to the Contractor's commencement of operations in such general vicinity. The Contractor shall furnish a written summary of the notification to the Engineer.

The Contractor's failure to give the two day's notice hereinabove provided shall be cause for the Engineer to suspend the Contractor's operations in the general vicinity of a utility service or facility.

Where the outside limits of an underground utility service have been located and staked on the ground, the Contractor shall be required to use excavation methods acceptable to the Engineer within 3 feet (90 cm) of such outside limits at such points as may be required to ensure protection from damage due to the Contractor's operations.

Should the Contractor damage or interrupt the operation of a utility service or facility by accident or otherwise, he shall immediately notify the proper authority and the Engineer and shall take all reasonable measures to prevent further damage or interruption of service. The Contractor, in such events, shall cooperate with the utility service or facility owner and the Engineer continuously until such damage has been repaired and service restored to the satisfaction of the utility or facility owner.

The Contractor shall bear all costs of damage and restoration of service to any utility service or facility due to his/her operations whether or not due to negligence or accident. The contract owner reserves the right to deduct such costs from any monies due or which may become due the Contractor, or his/her surety.

70-16 FURNISHING RIGHTS-OF-WAY. The owner will be responsible for furnishing all rights-of-way upon which the work is to be constructed in advance of the Contractor's operations.

70-17 PERSONAL LIABILITY OF PUBLIC OFFICIALS. In carrying out any of the contract provisions or in exercising any power or authority granted to him by this contract, there shall be no liability upon the Engineer, his/her authorized representatives, or any officials of the owner either personally or as an official of the owner. It is understood that in such matters they act solely as agents and representatives of the owner.

70-18 NO WAIVER OF LEGAL RIGHTS. Upon completion of the work, the owner will expeditiously make final inspection and notify the Contractor of final acceptance. Such final acceptance, however, shall not preclude or estop the owner from correcting any measurement, estimate, or certificate made before or after completion of the work, nor shall the owner be precluded or estopped from recovering from the Contractor or his/her surety, or both, such overpayment as may be sustained, or by failure on the part of the Contractor to fulfill his/her obligations under the contract. A waiver on the part of the owner of any breach of any part of the contract shall not be held to be a waiver of any other or subsequent breach.

The Contractor, without prejudice to the terms of the contract, shall be liable to the owner for latent defects, fraud, or such gross mistakes as may amount to fraud, or as regards the owner's rights under any warranty or guaranty.

70-19 ENVIRONMENTAL PROTECTION. The Contractor shall comply with all Federal, state, and local laws and regulations controlling pollution of the environment. He shall take necessary precautions to prevent pollution of streams, lakes, ponds, and reservoirs with fuels, oils, bitumens, chemicals, or other harmful materials and to prevent pollution of the atmosphere from partiulate and gaseous matter.

* *

For AIP contracts, the contract provisions required to mitigate the environmental consequences of the contract work should be specified in the contract specifications as required generally and specifically by the Environmental Impact Statement or Assessment Report for the particular AIP project.

* *

70-20 ARCHAEOLOGICAL AND HISTORICAL FINDINGS. Unless otherwise specified in this subsection, the Contractor is advised that the site of the work is not within any property, district, or site, and does not contain any building, structure, or object listed in the current National Register of Historic Places published by the United States Department of Interior.

Should the Contractor encounter, during his/her operations, any building, part of a building, structure, or object which is incongruous with its surroundings, he shall immediately cease operations in that location and notify the Engineer. The Engineer will immediately investigate the Contractor's finding and will direct the Contractor to either resume his/her operations or to suspend operations as directed.

Should the Engineer order suspension of the Contractor's operations in order to protect an archaeological or historical finding, or order the Contractor to perform extra work, such shall be covered by an appropriate contract modification (change order or supplemental agreement) as provided in the subsection titled EXTRA WORK of Section 40 and the subsection titled PAYMENT FOR EXTRA WORK AND FORCE ACCOUNT WORK of Section 90. If appropriate, the contract modification shall include an extension of contract time in accordance with the subsection titled DETERMINATION AND EXTENSION OF CONTRACT TIME of Section 80.

* *

The contract language suggested in subsection 70-20 is intended to remind owners of airports that proper planning will prevent construction delays that may be caused when objects of archaeological or historical significance are encountered in the work. Airport owners should include in their planning the coordination with state and local planning bodies as may be required by state and local laws pertaining to the National Historic Preservation Act of 1966.

As a general rule, disposition of known archaeological or historic objects that are situated on the site of the work should be covered by a separate contract when such disposition is required as a part of FAA project approval.

* *

SECTION 80

PROSECUTION AND PROGRESS

80-01 SUBLETTING OF CONTRACT. The owner will not recognize any subcontractor on the work. The Contractor shall at all times when work is in progress be represented either in person, by a qualified superintendent, or by other designated, qualified representative who is duly authorized to receive and execute orders of the Engineer.

Should the Contractor elect to assign his/her contract, said assignment shall be concurred in by the surety, shall be presented for the consideration and approval of the owner, and shall be consummated only on the written approval of the owner. In case of approval, the Contractor shall file copies of all subcontracts with the Engineer.

80-02 NOTICE TO PROCEED. The notice to proceed shall state the date on which it is expected the Contractor will begin the construction and from which date contract time will be charged. The Contractor shall begin the work to be performed under the contract within 10 days of the date set by the Engineer in the written notice to proceed, but in any event, the Contractor shall notify the Engineer at least 24 hours in advance of the time actual construction operations will begin.

80-03 PROSECUTION AND PROGRESS. Unless otherwise specified, the Contractor shall submit his/her progress schedule for the Engineer's approval within 10 days after the effective date of the notice to proceed. The Contractor's progress schedule, when approved by the Engineer, may be used to establish major construction operations and to check on the progress of the work. The Contractor shall provide sufficient materials, equipment, and labor to guarantee the completion of the project in accordance with the plans and specifications within the time set forth in the proposal.

If the Contractor falls significantly behind the submitted schedule, the Contractor shall, upon the Engineer's request, submit a revised schedule for completion of the work within the contract time and modify his/her operations to provide such additional materials, equipment, and labor necessary to meet the revised schedule. Should the prosecution of the work be discontinued for any reason, the Contractor shall notify the Engineer at least 24 hours in advance of resuming operations.

For AIP contracts, the Contractor shall not commence any actual construction prior to the date on which the notice to proceed is issued by the owner.

* *

It is important that the owner (sponsor) issue the notice to proceed for AIP contracts because any actual construction work, performed prior to the execution of a grant agreement, (between the sponsor and the FAA) would be ineligible for FAA participation in its cost.

* *

80-04 LIMITATION OF OPERATIONS. The Contractor shall control his/her operations and the operations of his/her subcontractors and all suppliers so as to provide for the free and unobstructed movement of aircraft in the AIR OPERATIONS AREAS of the airport.

When the work requires the Contractor to conduct his/her operations within an AIR OPERATIONS AREA of the airport, the work shall be coordinated with airport management (through the Engineer) at least 48 hours prior to commencement of such work. The Contractor shall not close an AIR OPERATIONS AREA until so authorized by the Engineer and until the necessary temporary marking and associated lighting is in place as provided in the subsection titled BARRICADES, WARNING SIGNS, AND HAZARD MARKINGS of Section 70.

When the contract work requires the Contractor to work within an AIR OPERATIONS AREA of the airport on an intermittent basis (intermittent opening and closing of the AIR OPERATIONS AREA), the Contractor shall maintain constant communications as hereinafter specified; immediately obey all instructions to vacate the AIR OPERATIONS AREA; immediately obey all instructions to resume work in such AIR

OPERATIONS AREA. Failure to maintain the specified communications or to obey instructions shall be cause for suspension of the Contractor's operations in the AIR OPERATIONS AREA until the satisfactory conditions are provided. The following AIR OPERATIONS AREA (AOA) cannot be closed to operating aircraft to permit the Contractor's operations on a continuous basis and will therefore be closed to aircraft operations intermittently as follows:

AOA
TIME PERIODS AOA CAN BE CLOSED
TYPE OF COMMUNICATIONS REQUIRED WHEN WORKING IN AN AOA
CONTROL AUTHORITY

* *

It is intended that the contract provisions which limit the Contractor's operations be specified for all AIR OPERATIONS AREAS of the airport that are not intended to be closed to permit continuous construction operations. These contract provisions vary widely from airport to airport and require careful coordination (during the early stages of designing the work) with the owner, FAA, and the users of the airport. AC 150/5300-9, Predesign, Prebid, and Preconstruction Conferences for Airport Grant Projects, contains additional information on this subject.

* *

80-05 CHARACTER OF WORKERS, METHODS, AND EQUIPMENT. The Contractor shall, at all times, employ sufficient labor and equipment for prosecuting the work to full completion in the manner and time required by the contract, plans, and specifications.

All workers shall have sufficient skill and experience to perform properly the work assigned to them. Workers engaged in special work or skilled work shall have sufficient experience in such work and in the operation of the equipment required to perform the work satisfactorily.

All equipment which is proposed to be used on the work shall be of sufficient size and in such mechanical condition as to met requirements of the work and to produce a satisfactory quality of work. Equipment used on any portion of the work shall be such that no injury to previously completed work, adjacent property, or existing airport facilities will result from its use.

When the methods and equipment to be used by the Contractor in accomplishing the work are not prescribed in the contract, the Contractor is free to use any methods or equipment that will accomplish the work in conformity with the requirements of the contract, plans, and specifications.

When the contract specifies the use of certain methods and equipment, such methods and equipment shall be used unless others are authorized by the Engineer. If the Contractor desires to use a method or type of equipment other than specified in the contract, he may request authority from the Engineer to do so. The request shall be in writing and shall include a full description of the methods and equipment proposed and of the reasons for desiring to make the change. If approval is given, it will be on the condition that the Contractor will be fully responsible for producing work in conformity with contract requirements. If, after trial use of the substituted methods or equipment, the Engineer determines that the work produced does not meet contract requirements, the Contractor shall discontinue the use of the substitute method or equipment and shall complete the remaining work with the specified methods and equipment. The Contractor shall remove any deficient work and replace it with work of specified quality, or take such other corrective action as the Engineer may direct. No change will be made in basis of payment for the contract items involved nor in contract time as a result of authorizing a change in methods or equipment under this subsection.

80-06 TEMPORARY SUSPENSION OF THE WORK. The Engineer shall have the authority to suspend the work wholly, or in part, for such period or periods as he may deem necessary, due to unsuitable weather, or such other conditions as are considered unfavorable for the prosecution of the work, or for such time as is necessary due to the failure on the part of the Contractor to carry out orders given or perform any or all provisions of the contract.

In the event that the Contractor is ordered by the Engineer, in writing, to suspend work for some unforeseen cause not otherwise provided for in the contract and over which the Contractor has no control, the

Contractor may be reimbursed for actual money expended on the work during the period of shutdown. No allowance will be made for anticipated profits. The period of shutdown shall be computed from the effective date of the Engineer's order to suspend work to the effective date of the Engineer's order to resume the work. Claims for such compensation shall be filed with the Engineer within the time period stated in the Engineer's order to resume work. The Contractor shall submit with his/her claim information substantiating the amount shown on the claim. The Engineer will forward the Contractor's claim to the owner for consideration in accordance with local laws or ordinances. No provision of this article shall be construed as entitling the Contractor to compensation for delays due to inclement weather, for suspensions made at the request of the Contractor, or for any other delay provided for in the contract, plans, or specifications.

If it should become necessary to suspend work for an indefinite period, the Contractor shall store all materials in such manner that they will not become an obstruction nor become damaged in any way. He shall take every precaution to prevent damage or deterioration of the work performed and provide for normal drainage of the work. The Contractor shall erect temporary structures where necessary to provide for traffic on, to, or from the airport.

80-07 DETERMINATION AND EXTENSION OF CONTRACT TIME. The number of calendar or working days allowed for completion of the work shall be stated in the proposal and contract and shall be known as the CONTRACT TIME.

Should the contract time require extension for reasons beyond the Contractor's control, it shall be adjusted as follows:

CONTRACT TIME based on WORKING DAYS shall be calculated weekly by the Engineer. The Engineer will furnish the Contractor a copy of his/her weekly statement of the number of working days charged against the contract time during the week and the number of working days currently specified for completion of the contract (the original contract time plus the number of working days, if any, that have been included in approved CHANGE ORDERS or SUPPLEMENTAL AGREEMENTS covering EXTRA WORK).

The Engineer shall base his/her weekly statement of contract time charged on the following considerations:

(1) No time shall be charged for days on which the Contractor is unable to proceed with the principal item of work under construction at the time for at least 6 hours with the normal work force employed on such principal item. Should the normal work force be on a double-shift, 12 hours shall be used. Should the normal work force be on a triple-shift, 18 hours shall apply. Conditions beyond the Contractor's control such as strikes, lockouts, unusual delays in transportation, temporary suspension of the principal item of work under construction or temporary suspension of the entire work which have been ordered by the Engineer for reasons not the fault of the Contractor, shall not be charged against the contract time.

(2) The Engineer will not make charges against the contract time prior to the effective date of the notice to proceed.

(3) The Engineer will begin charges against the contract time on the first working day after the effective date of the notice to proceed.

(4) The Engineer will not make charges against the contract time after the date of final acceptance as defined in the subsection titled FINAL ACCEPTANCE of Section 50.

(5) The Contractor will be allowed 1 week in which to file a written protest setting forth his/her objections to the Engineer's weekly statement. If no objection is filed within such specified time, the weekly statement shall be considered as acceptable to the Contractor.

The contract time (stated in the proposal) is based on the originally estimated quantities as described in the subsection titled INTERPRETATION OF ESTIMATED PROPOSAL QUANTITIES of Section 20. Should the satisfactory completion of the contract require performance of work in greater quantities than those estimated in the proposal, the contract time shall be increased in the same proportion as the cost of the actually completed quantities bears to the cost of the originally estimated quantities in the proposal. Such increase in contract time shall not consider either the cost of work or the extension of contract time that has been covered by change order or supplemental agreement and shall be made at the time of final payment.

b. CONTRACT TIME based on CALENDAR DAYS shall consist of the number of calendar days stated in the contract counting from the effective date of the notice to proceed and including all Saturdays, Sundays, holidays, and nonwork days. All calendar days elapsing between the effective dates of the Engineer's orders to suspend and resume all work, due to causes not the fault of the Contractor, shall be excluded.

At the time of final payment, the contract time shall be increased in the same proportion as the cost of the actually completed quantities bears to the cost of the originally estimated quantities in the proposal. Such increase in the contract time shall not consider either cost of work or the extension of contract time that has been covered by a change order or supplemental agreement. Charges against the contract time will cease as of the date of final acceptance.

c. When the contract time is a specified completion date, it shall be the date on which all contract work shall be substantially completed.

If the Contractor finds it impossible for reasons beyond his/her control to complete the work within the contract time as specified, or as extended in accordance with the provisions of this subsection, he may, at any time prior to the expiration of the contract time as extended, make a written request to the Engineer for an extension of time setting forth the reasons which he believes will justify the granting of his/her request. The Contractor's plea that insufficient time was specified is not a valid reason for extension of time. If the Engineer finds that the work was delayed because of conditions beyond the control and without the fault of the Contractor, he may extend the time for completion in such amount as the conditions justify. The extended time for completion shall then be in full force and effect, the same as though it were the original time for completion.

80-08 FAILURE TO COMPLETE ON TIME. For each calendar day or working day, as specified in the contract, that any work remains uncompleted after the contract time (including all extensions and adjustments as provided in the subsection titled DETERMINATION AND EXTENSION OF CONTRACT TIME of this Section) the sum specified in the contract and proposal as liquidated damages will be deducted from any money due or to become due the Contractor or his/her surety. Such deducted sums shall not be deducted as a penalty but shall be considered as liquidation of a reasonable portion of damages that will be incurred by the owner should the Contractor fail to complete the work in the time provided in his/her contract.

Permitting the Contractor to continue and finish the work or any part of it after the time fixed for its completion, or after the date to which the time for completion may have been extended, will in no way operate as a wavier on the part of the owner of any of its rights under the contract.

* *

The contract time is an essential part of each contract for construction on airports and should be considered carefully in the preparation of plans and specifications.

In selecting the method of specifying the contract time (working days, calendar days, or a specified completion date), the primary consideration should be the impact on the operations of the airport should the Contractor be unable to complete the work within the time specified. These considerations should be coordinated with the airport users as indicated in AC 150/5300-9, Predesign, Prebid, and Preconstruction Conferences for Airport Grant Projects.

The amount of liquidated damages to be specified should be tailored to each contract and should be based on the cost per day incurred by the owner should the Contractor overrun the contract time. For large airports (where the impact on airport operations may be great), it is not practical for the owner to attempt to recover all loss of revenue through liquidated damages. Consequently, the amount of liquidated damages specified must be balanced somewhere between the cost per day incurred for a time overrun and the cost that bidders would have to add to their bids to cover the contingency of a time overrun.

Generally speaking, contract time is based on working days when completion is not critical to operation of the airport. As the impact on airport operations increases, the use of calendar days will give more control. Use of a specified completion date should be used only in cases

where the construction operations require long-range rescheduling of airport operations. Also, generally speaking, the amount of liquidated damages would be greater for a calendar day contract than for a working day contract and would be greatest for a specified completion date contract.

* *

80-09 DEFAULT AND TERMINATION OF CONTRACT. The Contractor shall be considered in default of his/her contract and such default will be considered as cause for the owner to terminate the contract for any of the following reasons if the Contractor:

a. Fails to begin the work under the contract within the time specified in the "Notice to Proceed," or

b. Fails to perform the work or fails to provide sufficient workers, equipment or materials to assure completion of work in accordance with the terms of the contract, or

c. Performs the work unsuitably or neglects or refuses to remove materials or to perform anew such work as may be rejected as unacceptable and unsuitable, or

d. Discontinues the prosecution of the work, or

e. Fails to resume work which has been discontinued within a reasonable time after notice to do so, or

f. Becomes insolvent or is declared bankrupt, or commits any act of bankruptcy or insolvency, or

g. Allows any final judgment to stand against him unsatisfied for a period of 10 days, or

h. Makes an assignment for the benefit of creditors, or

i. For any other cause whatsoever, fails to carry on the work in an acceptable manner.

Should the Engineer consider the Contractor in default of the contract for any reason hereinbefore, he shall immediately give written notice to the Contractor and the Contractor's surety as to the reasons for considering the Contractor in default and the owner's intentions to terminate the contract.

If the Contractor or surety, within a period of 10 days after such notice, does not proceed in accordance therewith, then the owner will, upon written notification from the Engineer of the facts of such delay, neglect, or default and the Contractor's failure to comply with such notice, have full power and authority without violating the contract, to take the prosecution of the work out of the hands of the Contractor. The owner may appropriate or use any or all materials and equipment that have been mobilized for use in the work and are acceptable and may enter into an agreement for the completion of said contract according to the terms and provisions thereof, or use such other methods as in the opinion of the Engineer will be required for the completion of said contract in an acceptable manner.

All costs and charges incurred by the owner, together with the cost of completing the work under contract, will be deducted from any monies due or which may become due the Contractor. If such expense exceeds the sum which would have been payable under the contract, then the Contractor and the surety shall be liable and shall pay to the owner the amount of such excess.

80-10 TERMINATION FOR NATIONAL EMERGENCIES. The owner shall terminate the contract or portion thereof by written notice when the Contractor is prevented from proceeding with the construction contract as a direct result of an Executive Order of the President with respect to the prosecution of war or in the interest of national defense.

When the contract, or any portion thereof, is terminated before completion of all items of work in the contract, payment will be made for the actual number of units or items of work completed at the contract price or as mutually agreed for items of work partially completed or not started. No claims or loss of anticipated profits shall be considered.

Reimbursement for organization of the work, and other overhead expenses, (when not otherwise included in the contract) and moving equipment and materials to and from the job will be considered, the intent being that an equitable settlement will be made with the Contractor.

Acceptable materials, obtained or ordered by the Contractor for the work and that are not incorporated in the work shall, at the option of the Contractor, be purchased from the Contractor at actual cost as shown by receipted bills and actual cost records at such points of delivery as may be designated by the Engineer.

Termination of the contract or a portion thereof shall neither relieve the Contractor of his/her responsibilities for the completed work nor shall it relieve his/her surety of its obligation for and concerning any just claim arising out of the work performed.

SECTION 90

MEASUREMENT AND PAYMENT

90-01 MEASUREMENT OF QUANTITIES. All work completed under the contract will be measured by the Engineer, or his/her authorized representatives, using United States Customary Units of Measurement or the International System of Units.

The method of measurement and computations to be used in determination of quantities of material furnished and of work performed under the contract will be those methods generally recognized as conforming to good engineering practice.

Unless otherwise specified, longitudinal measurements for area computations will be made horizontally, and no deductions will be made for individual fixtures (or leave-outs) having an area of 9 square feet (0.8 square meter) or less. Unless otherwise specified, transverse measurements for area computations will be the neat dimensions shown on the plans or ordered in writing by the Engineer.

Structures will be measured according to neat lines shown on the plans or as altered to fit field conditions.

Unless otherwise specified, all contract items which are measured by the linear foot such as electrical ducts, conduits, pipe culverts, underdrains, and similar items shall be measured parallel to the base or foundation upon which such items are placed.

In computing volumes of excavation the average end area method or other acceptable methods will be used.

The thickness of plates and galvanized sheet used in the manufacture of corrugated metal pipe, metal plate pipe culverts and arches, and metal cribbing will be specified and measured in decimal fraction of inches.

The term "ton" will mean the short ton consisting of 2,000 pounds (907 kilograms) avoirdupois. All materials which are measured or proportioned by weights shall be weighed on accurate, approved scales by competent, qualified personnel at locations designed by the Engineer. If material is shipped by rail, the car weight may be accepted provided that only the actual weight of material be paid for. However, car weights will not be acceptable for material to be passed through mixing plants. Trucks used to haul material being paid for by weight shall be weighed empty daily at such times as the Engineer directs, and each truck shall bear a plainly legible identification mark.

Materials to be measured by volume in the hauling vehicle shall be hauled in approved vehicles and measured therein at the point of delivery. Vehicles for this purpose may be of any size or type acceptable to the Engineer, provided that the body is of such shape that the actual contents may be readily and accurately determined. All vehicles shall be loaded to at least their water level capacity, and all loads shall be leveled when the vehicles arrive at the point of delivery.

When requested by the Contractor and approved by the Engineer in writing, material specified to be measured by the cubic yard (cubic meter) may be weighed, and such weights will be converted to cubic yards (cubic meters) for payment purposes. Factors for conversion from weight measurement to volume measurement will be determined by the Engineer and shall be agreed to by the Contractor before such method of measurement of pay quantities is used.

Bituminous materials will be measured by the gallon (liter) or ton (kilogram). When measured by volume, such volumes will be measured at 60° F (15° C) or will be corrected to the volume at 60° F (15° C) using ASTM D 1250 for asphalts or ASTM D 633 for tars.

Net certified scale weights or weights based on certified volumes in the case of rail shipments will be used as a basis of measurement, subject to correction when bituminous material has been lost from the car or the distributor, wasted, or otherwise not incorporated in the work.

When bituminous materials are shipped by truck or transport, net certified weights by volume, subject to correction for loss or foaming, may be used for computing quantities.

Cement will be measured by the ton (kilogram) or hundredweight (kilogram).

Timber will be measured by the thousand feet board measure (M.F.B.M.) actually incorporated in the structure. Measurement will be based on nominal widths and thicknesses and the extreme length of each piece.

The term "lump sum" when used as an item of payment will mean complete payment for the work described in the contract.

When a complete structure or structural unit (in effect, "lump sum" work) is specified as the unit of measurement, the unit will be construed to include all necessary fittings and accessories.

Rental of equipment will be measured by time in hours of actual working time and necessary traveling time of the equipment within the limits of the work. Special equipment ordered by the Engineer in connection with force account work will be measured as agreed in the change order or supplemental agreement authorizing such force account work as provided in the subsection titled PAYMENT FOR EXTRA AND FORCE ACCOUNT WORK of this section.

When standard manufactured items are specified such as fence, wire, plates, rolled shapes, pipe conduit, etc., and these items are identified by gage, unit weight, section dimensions, etc., such identification will be considered to be nominal weights or dimensions. Unless more stringently controlled by tolerances in cited specifications, manufacturing tolerances established by the industries involved will be accepted.

Scales for weighing materials which are required to be proportioned or measured and paid for by weight shall be furnished, erected, and maintained by the Contractor, or be certified permanently installed commercial scales.

Scales shall be accurate within one-half percent of the correct weight throughout the range of use. The Contractor shall have the scales checked under the observation of the inspector before beginning work and at such other times as requested. The intervals shall be uniform in spacing throughout the graduated or marked length of the beam or dial and shall not exceed one-tenth of 1 percent of the nominal rated capacity of the scale, but not less than 1 pound (454 grams). The use of spring balances will not be permitted.

Beams, dials, platforms, and other scale equipment shall be so arranged that the operator and the inspector can safely and conveniently view them.

Scale installations shall have available ten standard 50-pound (2.3 kilogram) weights for testing the weighing equipment or suitable weights and devices for other approved equipment.

Scales must be tested for accuracy and serviced before use at a new site. Platform scales shall be installed and maintained with the platform level and rigid bulkheads at each end.

Scales "overweighing" (indicating more than correct weight) will not be permitted to operate, and all materials received subsequent to the last previous correct weighting-accuracy test will be reduced by the percentage of error in excess of one-half of 1 percent.

In the event inspection reveals the scales have been "underweighing" (indicating less than correct weight), they shall be adjusted, and no additional payment to the Contractor will be allowed for materials previously weighed and recorded.

All costs in connection with furnishing, installing, certifying, testing, and maintaining scales; for furnishing check weights and scale house; and for all other items specified in this subsection, for the weighing of materials for proportioning or payment, shall be included in the unit contract prices for the various items of the project.

When the estimated quantities for a specific portion of the work are designated as the pay quantities in the contract, they shall be the final quantities for which payment for such specific portion of the work will be made, unless the dimensions of said portions of the work shown on the plans are revised by the Engineer. If revised dimensions result in an increase or decrease in the quantities of such work, the final quantities for payment will be revised in the amount represented by the authorized changes in the dimensions.

90-02 SCOPE OF PAYMENT. The Contractor shall receive and accept compensation provided for in the contract as full payment for furnishing all materials, for performing all work under the contract in a complete and acceptable manner, and for all risk, loss, damage, or expense of whatever character arising out

of the nature of the work or the prosecution thereof, subject to the provisions of the subsection titled NO WAIVER OF LEGAL RIGHTS of Section 70.

When the "basis of payment" subsection of a technical specification requires that the contract price (price bid) include compensation for certain work or material essential to the item, this same work or material will not also be measured for payment under any other contract item which may appear elsewhere in the contract, plans, or specifications.

90-03 COMPENSATION FOR ALTERED QUANTITIES. When the accepted quantities of work vary from the quantities in the proposal, the Contractor shall accept as payment in full, so far as contract items are concerned, payment at the original contract price for the accepted quantities of work actually completed and accepted. No allowance, except as provided for in the subsection titled ALTERATION OF WORK AND QUANTITIES of Section 40 will be made for any increased expense, loss of expected reimbursement, or loss of anticipated profits suffered or claimed by the Contractor which results directly from such alterations or indirectly from his/her unbalanced allocation of overhead and profit among the contract items, or from any other cause.

90-04 PAYMENT FOR OMITTED ITEMS. As specified in the subsection titled OMITTED ITEMS of Section 40, the Engineer shall have the right to omit from the work (order nonperformance) any contract item, except major contract items, in the best interest of the owner.

Should the Engineer omit or order nonperformance of a contract item or portion of such item from the work, the Contractor shall accept payment in full at the contract prices for any work actually completed and acceptable prior to the Engineer's order to omit or nonperform such contract item.

Acceptable materials ordered by the Contractor or delivered on the work prior to the date of the Engineer's order will be paid for at the actual cost to the Contractor and shall thereupon become the property of the owner.

In addition to the reimbursement hereinbefore provided, the Contractor shall be reimbursed for all actual costs incurred for the purpose of performing the omitted contract item prior to the date of the Engineer's order. Such additional costs incurred by the Contractor must be directly related to the deleted contract item and shall be supported by certified statements by the Contractor as to the nature the amount of such costs.

90-05 PAYMENT FOR EXTRA AND FORCE ACCOUNT WORK. Extra work, performed in accordance with the subsection titled EXTRA WORK of Section 40, will be paid for at the contract prices or agreed prices specified in the change order or supplemental agreement authorizing the extra work. When the change order or supplemental agreement authorizing the extra work requires that it be done by force account, such force account shall be measured and paid for based on expended labor, equipment, and materials plus a negotiated and agreed upon allowance for overhead and profit.

a. Miscellaneous. No additional allowance will be made for general superintendence, the use of small tools, or other costs for which no specific allowance is herein provided.

b. Comparison of Record. The Contractor and the Engineer shall compare records of the cost of force account work at the end of each day. Agreement shall be indicated by signature of the Contractor and the Engineer or their duly authorized representatives.

c. Statement. No payment will be made for work performed on a force account basis until the Contractor has furnished the Engineer with duplicate itemized statements of the cost of such force account work detailed as follows:

(1) Name, classification, date, daily hours, total hours, rate and extension for each laborer and foreman.

(2) Designation, dates, daily hours, total hours, rental rate, and extension for each unit of machinery and equipment.

(3) Quantities of materials, prices, and extensions.

(4) Transportation of materials.

(5) Cost of property damage, liability and workman's compensation insurance premiums, unemployment insurance contributions, and social security tax.

Statements shall be accompanied and supported by a receipted invoice for all materials used and transportation charges. However, if materials used on the force account work are not specifically purchased for such work but are taken from the Contractor's stock, then in lieu of the invoices the Contractor shall furnish an affidavit certifying that such materials were taken from his/her stock, that the quantity claimed was actually used, and that the price and transportation claimed represent the actual cost to the Contractor.

90-06 PARTIAL PAYMENTS. Partial payments will be made at least once each month as the work progresses. Said payments will be based upon estimates prepared by the Engineer of the value of the work performed and materials complete in place in accordance with the contract, plans, and specifications. Such partial payments may also include the delivered actual cost of those materials stockpiled and stored in accordance with the subsection titled PAYMENT FOR MATERIALS ON HAND of this section.

No partial payment will be made when the amount due the Contractor since the last estimate amounts to less than five hundred dollars.

From the total of the amount determined to be payable on a partial payment, 10 percent of such total amount will be deducted and retained by the owner until the final payment is made, except as may be provided (at the Contractor's option) in the subsection titled PAYMENT OF WITHHELD FUNDS of this section. The balance (90 percent) of the amount payable, less all previous payments, shall be certified for payment. Should the Contractor exercise his/her option, as provided in the subsection titled PAYMENT OF WITHHELD FUNDS of this section, no such 10 percent retainage shall be deducted.

When not less than 95 percent of the work has been completed the Engineer may, at his/her discretion and with the consent of the surety, prepare an estimate from which will be retained an amount not less than twice the contract value or estimated cost, whichever is greater, of the work remaining to be done. The remainder, less all previous payments and deductions, will then be certified for payment to the Contractor.

It is understood and agreed that the Contractor shall not be entitled to demand or receive partial payment based on quantities of work in excess of those provided in the proposal or covered by approved change orders or supplemental agreements, except when such excess quantities have been determined by the Engineer to be a part of the final quantity for the item of work in question.

No partial payment shall bind the owner to the acceptance of any materials or work in place as to quality or quantity. All partial payments are subject to correction at the time of final payment as provided in the subsection titled ACCEPTANCE AND FINAL PAYMENT of this section.

90-07 PAYMENT FOR MATERIALS ON HAND. Partial payments may be made to the extent of the delivered cost of materials to be incorporated in the work, provided that such materials meet the requirements of the contract, plans, and specifications and are delivered to acceptable sites on the airport property or at other sites in the vicinity that are acceptable to the owner. Such delivered costs of stored or stockpiled materials may be included in the next partial payment after the following conditions are met:

a. The material has been stored or stockpiled in a manner acceptable to the Engineer at or on an approved site.

b. The Contractor has furnished the Engineer with acceptable evidence of the quantity and quality of such stored or stockpiled materials.

c. The Contractor has furnished the Engineer with satisfactory evidence that the material and transportation costs have been paid.

d. The Contractor has furnished the owner legal title (free of liens or encumbrances of any kind) to the material so stored or stockpiled.

e. The Contractor has furnished the owner evidence that the material so stored or stockpiled is insured against loss by damage to or disappearance of such materials at anytime prior to use in the work.

It is understood and agreed that the transfer of title and the owner's payment for such stored or stockpiled materials shall in no way relieve the Contractor of his/her responsibility for furnishing and placing such materials in accordance with the requirements of the contract, plans, and specifications.

In no case will the amount of partial payments for materials on hand exceed the contract price for such materials or the contract price for the contract item in which the material is intended to be used.

No partial payment will be made for stored or stockpiled living or perishable plant materials.

The Contractor shall bear all costs associated with the partial payment of stored or stockpiled materials in accordance with the provisions of this subsection.

90-088 PAYMENT OF WITHHELD FUNDS. At the Contractor's option, he/she may request that the owner accept (in lieu of the 10 percent retainage on partial payments described in the subsection titled PARTIAL PAYMENTS of this section) the Contractor's deposits in escrow under the following conditions.

a. The Contractor shall bear all expenses of establishing and maintaining an escrow account and escrow agreement acceptable to the owner.

b. The Contractor shall deposit to and maintain in such escrow only those securities or bank certificates of deposit as are acceptable to the owner and having a value not less than the 10 percent retainage that would otherwise be withheld from partial payment.

c. The Contractor shall enter into an escrow agreement satisfactory to the owner.

d. The Contractor shall obtain the written consent of the surety to such agreement.

90-09 ACCEPTANCE AND FINAL PAYMENT. When the contract work has been accepted in accordance with the requirements of the subsection titled FINAL ACCEPTANCE of Section 50, the Engineer will prepare the final estimate of the items of work actually performed. The Contractor shall approve the Engineer's final estimate or advise the Engineer of his/her objections to the final estimate which are based on disputes in measurements or computations of the final quantities to be paid under the contract as amended by change order or supplemental agreement. The Contractor and the Engineer shall resolve all disputes (if any) in the measurement and computation of final quantities to be paid within 30 calendar days of the Contractor's receipt of the Engineer's final estimate. If, after such 30-day period, a dispute still exists, the Contractor may approve the Engineer's estimate under protest of the quantities in dispute, and such disputed quantities shall be considered by the owner as a claim in accordance with the subsection titled CLAIMS FOR ADJUSTMENT AND DISPUTES of Section 50.

After the Contractor has approved, or approved under protest, the Engineer's final estimate, final payment will be processed based on the entire sum, or the undisputed sum in case of approval under protest, determined to be due the Contractor less all previous payments and all amounts to be deducted under the provisions of the contract. All prior partial estimates and payments shall be subject to correction in the final estimate and payment.

If the Contractor has filed a claim for additional compensation under the provisions of the subsection titled CLAIMS FOR ADJUSTMENTS AND DISPUTES of Section 50 or under the provisions of this subsection, such claims will be considered by the owner in accordance with local laws or ordinances. Upon final adjudication of such claims, any additional payment determined to be due the Contractor will be paid pursuant to a supplemental final estimate.

PART II—EARTHWORK

ITEM P-151 CLEARING AND GRUBBING

DESCRIPTION

151-1.1 This item shall consist of clearing or clearing and grubbing, including the disposal of materials, for all areas within the limits designated on the plans or as required by the Engineer.

Clearing shall consist of the cutting and removal of all trees, stumps, brush, logs, hedges, the removal of fences and other loose or projecting material from the designated areas. The grubbing of stumps and roots will not be required.

Clearing, when so designated, shall consist of the cutting and removal of isolated single trees or isolated groups of trees. The cutting of all the trees of this classification shall be in accordance with the requirements for the particular area being cleared, or as shown on the plans, or as directed by the Engineer. The trees shall be considered isolated when they are 40 feet (12 m) or more apart, with the exception of a small clump of approximately five trees or less.

Clearing and grubbing shall consist of clearing the surface of the ground of the designated areas of all trees, stumps, down timber, logs, snags, brush, undergrowth, hedges, heavy growth of grass or weeds, fences, structures, debris, and rubbish of any nature, natural obstructions or such material which in the opinion of the Engineer is unsuitable for the foundation of strips, pavements, or other required structures, including the grubbing of stumps, roots, matted roots, foundations, and the disposal from the project of all spoil materials resulting from clearing and grubbing by burning or otherwise.

CONSTRUCTION METHODS

151-2.1 GENERAL. The areas denoted on the plans to be cleared or cleared and grubbed shall be staked on the ground by the Engineer. The clearing and grubbing shall be done at a satisfactory distance in advance of the grading operations.

All spoil materials removed by clearing or by clearing and grubbing shall be disposed of by burning, when permitted by local laws, or by removal to approved disposal areas. When burning of material is permitted, it shall be burned under the constant care of competent watchmen so that the surrounding vegetation and other adjacent property will not be jeopardized. Burning shall be done in accordance with all applicable laws, ordinances, and regulations. Before starting any burning operations, the Contractor shall notify the agency having jurisdiction.

As far as practicable, waste concrete and masonry shall be placed on slopes of embankments or channels. When embankments are constructed of such material, this material shall be placed in accordance with requirements for formation of embankments. Any broken concrete or masonry which cannot be used in construction, and all other materials not considered suitable for use elsewhere, shall be disposed of by the Contractor. In no case shall any discarded materials be left in windrows or piles adjacent to or within the airport limits. The manner and location of disposal of materials shall be subject to the approval of the Engineer and shall not create an unsightly or objectionable view. When the Contractor is required to locate a disposal area outside the airport property limits at his/her own expense, he shall obtain and file with the Engineer, permission in writing from the property owner for the use of private property for this purpose.

If the plans or the specifications require the saving of merchantable timber, the Contractor shall trim the limbs and tops from designated trees, saw them into suitable lengths, and make the material available for removal by other agencies.

Any blasting necessary shall be done at the Contractor's responsibility, and the utmost care shall be taken not to endanger life or property.

The removal of existing structure and utilities required to permit orderly progress of work shall be accomplished by local agencies, unless otherwise shown on the plans. Whenever a telephone or telegraph pole, pipeline, conduit, sewer, roadway, or other utility is encountered and must be removed or relocated the

Contractor shall advise the Engineer who will notify the proper local authority or owner and attempt to secure prompt action.

151-2.2 CLEARING. The Contractor shall clear the staked or indicated area of all objectionable materials. Trees unavoidably falling outside the specified limits must be cut up, removed, and disposed of in a satisfactory manner. In order to minimize damage to trees that are to be left standing, trees shall be felled toward the center of area being cleared. The Contractor shall preserve and protect from injury all trees not to be removed. The trees, stumps, and brush shall be cut to a height of not more than 12 inches (300 mm) above the ground. The grubbing of stumps and roots will not be required.

When isolated trees are designated for clearing, the trees shall be classed in accordance with the butt diameter size as measured at a point 18 inches (45 cm) above the ground level or at a designated height specified in the proposal.

Fences shall be removed and disposed of when directed by the Engineer. Fence wire shall be neatly rolled and the wire and posts stored on the airport if they are to be used again, or stored at a designated location if the fence is to remain the property of a local owner or of a civic authority.

151-2.3 CLEARING AND GRUBBING. In areas designated to be cleared and grubbed, all stumps, roots, buried logs, brush, grass, and other unsatisfactory materials shall be removed, except where embankments exceeding 3-1/2 feet (105 cm) in depth are to be made outside of paved areas. In cases where such depth of embankments is to be made, all unsatisfactory materials shall be removed, but sound trees, stumps, and brush can be cut off within 6 inches (150 mm) above the ground and allowed to remain. Tap roots and other projections over 1-1/2 inches (37 mm) in diameter shall be grubbed out to a depth of at least 18 inches (45 cm) below the finished subgrade or slope elevation.

Any buildings and miscellaneous structures that are shown on the plans to be removed shall be demolished or removed, and all materials therefrom shall be disposed of either by burning or otherwise removed from the site. The remaining or existing foundations, wells, cesspools, and all like structures shall be destroyed by breaking our or breaking down the materials of which the foundations, wells, cesspools, etc., are built to a depth at least 2 feet (60 cm) below the existing surrounding ground. Any broken concrete, blocks, or other objectionable material which cannot be used in backfill shall be removed and disposed of. The holes or openings shall be backfilled with acceptable material and properly compacted.

All holes remaining after the grubbing operation in embankment areas shall have the sides broken down to flatten out the slopes, and shall be filled with acceptable material, moistened and properly compacted in layers to the density required in Item P-152. The same construction procedure shall be applied to all holes remaining after grubbing in excavation areas where the depth of holes exceeds the depth of the proposed excavation.

METHOD OF MEASUREMENT

151-3.1 The quantities of clearing or clearing and grubbing as shown by the limits on the plans or as ordered by the Engineer shall be the number of acres (square meters) or fractions thereof, of land specifically cleared or cleared and grubbed.

When isolated trees are designated for clearing, the quantities of trees, as determined in accordance with ranges of butt diameter size, measured at a point 18 inches (45 cm) above the ground level at the tree, shall be paid for according to the schedule of sizes as follows:

The number of trees:

From 0 to 2-1/2 feet (75 cm), butt diameter
From 2-1/2 to 5 feet (75 to 150 cm), butt diameter
For 5 feet (150 cm) or more, butt diameter

BASIS OF PAYMENT

151-4.1 Payment shall be made at the contract unit price per acre (square meter) for clearing. This price shall be full compensation for furnishing all materials and for all labor, equipment, tools, and incidentals necessary to complete the item.

151-4.2 Payment shall be made at the contract unit price for clearing isolated trees. This price shall be full compensation for furnishing all materials and for all labor, equipment, tools, and incidentals necessary to complete the item.

151-4.3 Payment shall be made at the contract unit price per acre (square meter) for clearing and grubbing. This price shall be full compensation for furnishing all materials and for all labor, equipment, tools, and incidentals necessary to complete the item.

Payment will be made under:

Item P-151-4.1 Clearing—per acre (square meter)

Item P-151-4.2 Clearing for isolated trees:

From 0 to 2-1/2 feet (75 cm) butt diameter, per tree
From 2-1/2 to 5 feet (75 to 150 cm) butt diameter, per tree

For 5 feet (150 cm) or more butt diameter, per tree

Item P-151-4.3 Clearing and grubbing--per acre (square meter)

ITEM P-152 EXCAVATION AND EMBANKMENT

DESCRIPTION

152-1.1 This item covers excavation, disposal, placement, and compaction of all materials within the limits of the work required to construct runway safety areas, runways, taxiways, aprons, and intermediate as well as other areas for drainage, building construction, parking, or other purposes in accordance with these specifications and in conformity to the dimensions and typical section shown on the plans.

152-1.2 CLASSIFICATION. All material excavated shall be classified as defined below:

a. Unclassified Excavation. Unclassified excavation shall consist of the excavation and disposal of all material, regardless of its nature, which is not otherwise classified and paid for under the following items.

b. Rock Excavation. Rock excavation shall include all solid rock in ledges, in bedded deposits, in unstratified masses, and conglomerate deposits which are so firmly cemented they cannot be removed without blasting or using rippers. All boulders containing a volume of more than 1/2 cubic yard (0.4 cubic meter) will be classified as "rock excavation."

c. Muck Excavation. Muck excavation shall consist of the removal and disposal of deposits of mixtures of soils and organic matter not suitable for foundation material. Muck shall include materials which will decay or produce subsidence in the embankment. It may be made up of decaying stumps, roots, logs, humus, or other material not satisfactory for incorporation in the embankment.

d. Drainage Excavation. Drainage excavation shall consist of all excavation made for the primary purpose of drainage and includes drainage ditches, such as intercepting, inlet or outlet; temporary levee construction; or any other type as shown on the plans.

e. Borrow Excavation. Borrow excavation shall consist of approved material required for the construction of embankment or for other portions of the work in excess of the quantity of usable material available from required excavations. Borrow material shall be obtained from areas within the limits of the airport property but outside the normal limits of necessary grading, or from areas outside the airport.

* *

All material excavated shall be considered "unclassified" unless the Engineer specifies other classifications in the project specifications.

Delete the classifications not applicable to a project.

* *

152-1.3 Unsuitable Excavation. Any material containing vegetable or organic matter, such as muck, peat, organic silt, or sod shall be considered unsuitable for use in embankment construction. Material, when approved by the Engineer as suitable to support vegetation, may be used on the embankment slope.

CONSTRUCTION METHODS

152-2.1 General. Before beginning excavation, grading, and embankment operations in any area, the area shall be completely cleared and grubbed in accordance with Item P-151.

The suitability of material to be placed in embankments shall be subject to approval by the Engineer. All unsuitable material shall be disposed of in waste areas shown on the plans. All waste areas shall be graded to allow positive drainage of the area and of adjacent areas. The surface elevation of waste areas shall not extend above the surface elevation of adjacent usable areas of the airport, unless specified on the plans or approved by the Engineer.

When the Contractor's excavating operations encounter artifacts of historical or archaeological significance, the operations shall be temporarily discontinued. At the direction of the Engineer, the Contractor shall exca-

vate the site in such a manner as to preserve the artifacts encountered and allow for their removal. Such excavation will be paid for as extra work.

Those areas outside of the pavement areas in which the top layer of soil material has become compacted, by hauling or other activities of the Contractor shall be scarified and disked to a depth of 4 inches (100 mm), in order to loosen and pulverize the soil.

If it is necessary to interrupt existing surface drainage, sewers or under-drainage, conduits, utilities, or similar underground structures the Contractor shall be responsible for and shall take all necessary precautions to preserve them or provide temporary services. When such facilities are encountered, the Contractor shall notify the Engineer, who shall arrange for their removal if necessary. The Contractor shall, at his/her own expense, satisfactorily repair or pay the cost of all damage to such facilities or structures which may result from any of the Contractor's operations during the period of the contract.

152-2.2 EXCAVATION. No excavation shall be started until the work has been staked out by the Contractor and the Engineer has obtained elevations and measurements of the ground surface. All suitable excavated material shall be used in the formation of embankment, subgrade, or for other purposes shown on the plans. All unsuitable material shall be disposed of as shown on the plans.

When the volume of the excavation exceeds that required to construct the embankments to the grades indicated, the excess shall be used to grade the areas of ultimate development or disposed of as directed. When the volume of excavation is not sufficient for constructing the fill to the grades indicated, the deficiency shall be obtained from borrow areas.

The grade shall be maintained so that the surface is well drained at all times. When necessary, temporary drains and drainage ditches shall be installed to intercept or divert surface water which may affect the work.

a. Selective Grading. When selective grading is indicated on the plans, the more suitable material as designated by the Engineer shall be used in constructing the embankment or in capping the pavement subgrade. If, at the time of excavation, it is not possible to place this material in its final location, it shall be stockpiled in approved areas so that it can be measured for payment for rehandling as specified in paragraph 3.3.

b. Undercutting. Rock, shale, hardpan, loose rock, boulders, or other material unsatisfactory for runway safety areas, subgrades, roads, shoulders, or any areas intended for turfing shall be excavated to a minimum depth of 12 inches (300 mm), or to the depth specified by the Engineer, below the subgrade. Muck, peak, matted roots, or other yielding material, unsatisfactory for subgrade foundation, shall be removed to the depth specified. Unsuitable materials shall be disposed of at locations shown on the plans. This excavated material shall be paid for at the contract unit price per cubic yard (per cubic meter) for [ ]. The excavated area shall be refilled with suitable material, obtained from the grading operations or borrow areas and thoroughly compacted by rolling. The necessary refilling will constitute a part of the embankment. Where rock cuts are made and refilled with selected material, any pockets created in the rock surface shall be drained in accordance with the details shown on the plans.

* *

The Engineer shall specify the appropriate class of excavation. If rock or muck excavation is not included under paragraph 1.2, unclassified excavation should be specified.

The plans shall show details for draining pockets created in rock cuts.

* *

c. Overbreak. Overbreak, including slides, is that portion of any material displaced or loosened beyond the finished work as planned or authorized by the Engineer. The Engineer shall determine if the displacement of such material was unavoidable and his/her decision shall be final. All overbreak shall be graded or removed by the Contractor and disposed of as directed; however, payment will not be made for the removal and disposal of overbreak which the Engineer determines as avoidable. Unavoidable overbreak will be classified as "Unclassified Excavation."

d. Removal of Utilities. The removal of existing structures and utilities required to permit the orderly progress of work will be accomplished by someone other than the Contractor, e.g., the utility unless other-

wise shown on the plans. All existing foundations shall be excavated for at least 2 feet (6 cm) below the top of subgrade or as indicated on the plans, and the material disposed of as directed. All foundations thus excavated shall be backfilled with suitable material and compacted as specified herein.

e. **Compaction Requirements.** The subgrade under areas to be paved shall be compacted to a depth of [ ] and to a density of not less than [ ] percent of the maximum density as determined by ASTM [ ].

* *

Subgrades Under Flexible Pavements. The Engineer shall specify compaction to a depth of 6 inches (150 mm) and to a density of not less than 95 percent for cohesive soils or 100 percent for noncohesive soils for areas serving single gear aircraft. For areas serving dual gear or dual tandem gear aircraft the Engineer shall specify the required compaction depths and densities as determined from AC 150/5320-6, Chapter 3, Section 2.

Subgrades Under Rigid Pavements. The Engineer shall specify the compaction depth and densities as determined from AC 150/5320-6, Chapter 3, Section 3.

The Engineer shall specify ASTM D 698 for areas designated for aircraft with gross weights of 60,000 pounds (27 200 Kg) or less, and ASTM D 1557 for areas designated for aircraft with gross weights greater than 60,000 pounds (27 200 Kg).

* *

Payment for suitable materials removed, manipulated, and replaced in order to obtain the required depth of density will be paid for as unclassified excavation.

The in-place field density shall be determined in accordance with ASTM D 1556 or ASTM D 2167. Stones or rock fragments larger than 4 inches (100 mm) in their greatest dimension will not be permitted in top 6 inches (150 mm) of the subgrade. The finished grading operations, conforming to the typical cross section, shall be completed and maintained at least 1,000 feet (300 m) ahead of the paving operations or as directed by the Engineer.

In cuts, all loose or protruding rocks on the back slopes shall be bared loose or otherwise removed to line of finished grade of slope. All cut-and-fill slopes shall be uniformly dressed to the slope, cross section, and alignment shown on the plans or as directed by the Engineer.

Blasting will be permitted only when proper precautions are taken for the safety of all persons, the work, and the property. All damage done to the work or property shall be repaired at the Contractor's expense. All operations of the Contractor in connection with the transportation, storage, and use of explosives shall conform to all state and local regulations and explosive manufacturers' instructions, with applicable approved permits reviewed by the Engineer. Any approval given, however, will not relieve the Contractor of his/her responsibility in blasting operations.

Where blasting is approved, the Contractor shall employ a vibration consultant, approved by the Engineer, to advise on explosive charge weights per delay and to analyze records from seismograph recordings. The seismograph shall be capable of producing a permanent record of the three components of the motion in terms of particle velocity, and in addition shall be capable of internal dynamic calibration.

In each distinct blasting area, where pertinent factors affecting blast vibrations and their effects in the area remain the same, the Contractor shall submit a blasting plan of the initial blasts to the Engineer for approval. This plan must consist of hole size, depth, spacing, burden, type of explosives, type of delay sequence, maximum amount of explosive on any one delay period, depth of rock, and depth of overburden if any. The maximum explosive charge weights per delay included in the plan shall not be increased without the approval of the engineering.

The Contractor shall keep a record of each blast fired—its date, time and location; the amount of explosives used, maximum explosive charge weight per delay period, and, where necessary, seismograph records identified by instrument number and location.

These records shall be made available to the Engineer on a monthly basis or in tabulated form at other times as required.

152-2.3 BORROW EXCAVATION. Borrow area(s) within the airport property are indicated on the plans. Borrow excavation shall be made only at these designated locations and within the horizontal and vertical limits as staked or as directed.

When borrow sources are outside the boundaries of the airport property, it shall be the Contractor's responsibility to locate and obtain the supply, subject to the approval of the Engineer. The Contractor shall notify the Engineer, at least 15 days prior to beginning the excavation, so necessary measurements and tests can be made. All unsuitable material shall be disposed of by the Contractor. All borrow pits shall be opened up to expose the vertical face of various strata of acceptable material to enable obtaining a uniform product. Borrow pits shall be excavated to regular lines to permit accurate measurements, and they shall be drained and left in a neat, presentable condition with all slopes dressed uniformly.

152-2.4 DRAINAGE EXCAVATION. Drainage excavation shall consist of excavating for drainage ditches such as intercepting, inlet or outlet, for temporary levee construction; or for any other type as designed or as shown on the plans. The work shall be performed in the proper sequence with the other construction. All satisfactory material shall be placed in fills; unsuitable material shall be placed in waste areas or as directed. Intercepting ditches shall be constructed prior to starting adjacent excavation operations. All necessary work shall be performed to secure a finish true to line, elevation, and cross section.

The Contractor shall maintain ditches constructed on the project to the required cross section and shall keep them free of debris or obstructions until the project is accepted.

152-2.5 PREPARATION OF EMBANKMENT AREA. Where an embankment is to be constructed to a height of 4 feet (120 m) or less, all sod and vegetable matter shall be removed from the surface upon which the embankment is to be placed, and the cleared surface shall be completely broken up by plowing or scarifying to a minimum depth of 6 inches (150 mm). This area shall then be compacted as indicated in paragraph 2.6. When the height of fill is greater than 4 feet (120 m), sod not required to be removed shall be thoroughly disked and recompacted to the density of the surrounding ground before construction of embankment.

Where embankments are to be placed on natural slopes steeper than 3 to 1, horizontal benches shall be constructed as shown on the plans.

* *

The Engineer shall include benching details on the plans based on the type of material, degree of consolidation of the material, and the degree of homogeneity of the material. The minimum width of the bench shall be sufficient to accommodate construction equipment.

* *

No direct payment shall be made for the work performed under this section. The necessary clearing and grubbing and the quantity of excavation removed will be paid for under the respective items of work.

152-2.6 FORMATION OF EMBANKMENTS. Embankments shall be formed in successive horizontal layers of not more than 8 inches (200 mm) in loose depth for the full width of the cross section, unless otherwise approved to the Engineer.

The grading operations shall be conducted, and the various soil strata shall be placed, to produce a soil structure a shown on the typical cross section or as directed. Materials such as brush, hedge, roots, stumps, grass and other organic matter, shall not be incorporated or buried in the embankment.

Operations on earthwork shall be suspended at any time when satisfactory results cannot be obtained because of rain, freezing, or other unsatisfactory conditions of the field. The Contractor shall drag, blade, or slope the embankment to provide proper surface drainage.

The material in the layer shall be within ± 2 percent of optimum moisture content before rolling to obtain the prescribed compaction. In order to achieve a uniform moisture content throughout the layer, wetting or drying of the material and manipulation shall be required when necessary. Should the material be too wet to

permit proper compaction or rolling, all work on all of the affected portions of the embankment shall be delayed until the material has dried to the required moisture content. Sprinkling of dry material to obtain the proper moisture content shall be done with approved equipment that will sufficiently distribute the water. Sufficient equipment to furnish the required water shall be available at all times. Samples of all embankment materials for testing, both before and after placement and compaction, will be taken for each [ ]. Based on these tests, the Contractor shall make the necessary corrections and adjustments in methods, materials or moisture content in order to achieve the correct embankment density.

* *

It is recommended that density tests be made for each 1000 cubic yards (30 cubic meters) of material placed per layer. The Engineer may specify other frequencies as appropriate to the job size. If it is necessary (because of the presence of expansive soils or other unusually sensitive soils) to apply special controls to the moisture content of the soil during or after compaction to ensure strength, the Engineer shall specify the appropriate moisture content. The moisture limitations shall be specified using acceptable moisture ranges as determined by ASTM D 698 or ASTM D 1557.

* *

Rolling operations shall be continued until the embankment is compacted to not less than 95 percent of maximum density for noncohesive soils, and 90 percent of maximum density for cohesive soils as determined by ASTM [ ]. Under all areas to be paved, the embankments shall be compacted to a depth of [ ] and to a density of not less than [ ] percent of the maximum density as determined by ASTM [ ].

* *

Subgrade Under Flexible Pavements. The Engineer shall specify the required compaction depths and densities as determined from AC 150/5320-6, Chapter 3, Section 3.

Subgrade Under Rigid Pavements. The Engineer shall specify the required compaction depths and densities as determined from AC 150/5320-6, Chapter 3, Section 3.

The Engineer shall specify ASTM D 698 for areas designated for aircraft with gross weights of 60,000 pounds (27 200 kg) or less and ASTM D 1557 for areas designated for aircraft with gross weights greater than 60,000 pounds (27 200 kg).

For soils with expansive characteristics, the maximum density should be determined in accordance with ASTM D 698 regardless of aircraft weight.

* *

On all areas outside of the pavement areas, no compaction will be required on the top 4 inches (100 mm).

The in-place field density shall be determined in accordance with ASTM D 1556 or ASTM D 2167.

Compaction areas shall be kept separate, and no layer shall be covered by another until the proper density is obtained.

During construction of the embankment, the Contractor shall route his/her equipment at all times, both when loaded and when empty, over the layers as they are placed and shall distribute the travel evenly over the entire width of the embankment. The equipment shall be operated in such a manner that hardpan, cemented gravel, clay, or other chunky soil material will be broken up into small particles and become incorporated with the other material in the layer.

In the construction of embankments, layer placement shall begin in the deepest portion of the fill; as placement progresses, layers shall be constructed approximately parallel to the finished pavement grade line.

When rock and other embankment material are excavated at approximately the same, time, the rock shall be incorporated into the outer portion of the embankment and the other material shall be incorporated under the future paved areas. Stones or fragmentary rock larger than 4 inches (100 mm) in their greatest dimensions will not be allowed in the top 6 inches (150 mm) of the subgrade. Rockfill shall be brought up in

layers as specified or as directed and every effort shall be exerted to fill the voids with the finer material forming a dense, compact mass. Rock or boulders shall not be disposed of outside the excavation or embankment areas, except at places and in the manner designated by the Engineer.

When the excavated material consists predominantly of rock fragments of such size that the material cannot be placed in layers of the prescribed thickness without crushing, pulverizing or further breaking down the pieces, such material may be placed in the embankment as directed in layers not exceeding 2 feet (60 cm) in thickness. Each layer shall be leveled and smoothed with suitable leveling equipment and by distribution of spalls and finer fragments of rock. These type lifts shall not be constructed above an elevation 4 feet (120 cm) below the finished subgrade. Density requirements will not apply to portions of embankments constructed of materials which cannot be tested in accordance with specified methods.

Frozen material shall not be placed in the embankment nor shall embankment be placed upon frozen material.

There will be no separate measurement of payment for compacted embankment, and all costs incidental to placing in layers, compacting, disking, watering, mixing, sloping, and other necessary operations for construction of embankments will be included in the contract price for excavation, borrow, or other items.

* *

The Engineer may specify payment for compacted "Embankment in Place." In this case, delete the preceding paragraph and indicate that payment will be made under embankment and that no payment will be made for excavation, borrow, or other items.

* *

152-2.7 FINISHING AND PROTECTION OF SUBGRADE. After the subgrade has been substantially completed the full width shall be conditioned by removing any soft or other unstable material which will not compact properly. The resulting areas and all other low areas, holes or depressions shall be brought to grade with suitable select material. Scarifying, blading, rolling and other methods shall be performed to provide a thoroughly compacted subgrade shaped to the lines and grades shown on the plans.

Grading of the subgrade shall be performed so that it will drain readily. The Contractor shall take all precautions necessary to protect the subgrade from damage. He/she shall limit hauling over the finished subgrade to that which is essential for construction purposes.

All ruts or rough places that develop in a completed subgrade shall be smoothed and recompacted.

No subbase, or surface course shall be placed on the subgrade until the subgrade has been approved by the Engineer.

152-2.8 HAUL. All hauling will be considered a necessary and incidental part of the work. Its cost shall be considered by the Contractor and included in the contract unit price for the pay of items of work involved. No payment will be made separately or directly for hauling on any part of the work.

152-2.9 TOLERANCES. In those areas upon which a subbase or base course is to be placed, the top of the subgrade shall be of such smoothness that, when tested with a 16-foot (4.8 m) straightedge applied parallel and at right angles to the centerline, it shall not show any deviation in excess of 1/2-inch (12 mm), or shall not be more than 0.05-foot (.015 m) from true grade as established by grade hubs or pins. Any deviation in excess of these amounts shall be corrected by loosening, adding, or removing materials; reshaping; and recompacting by sprinkling and rolling.

On runway safety areas, intermediate and other designated areas, the surface shall be of such smoothness that it will not vary more than 0.10 foot (0.03 m) from true grade as established by grade hubs. Any deviation in excess of this amount shall be corrected by loosening, adding or removing materials, and reshaping.

152-2.10 TOPSOIL. When topsoil is specified or required as shown on the plans or under Item T-905, it shall be salvaged from stripping or other grading operations. The topsoil shall meet the requirements of Item T-905. If, at the time of excavation or stripping, the topsoil cannot be placed in its proper and final section of finished construction, the material shall be stockpiled at approved locations. Stockpiles shall not be placed within [ ] feet of runway pavement or [ ] feet of taxiway pavement and shall not be placed

on areas which subsequently will require any excavation or embankment. If, in the judgment of the Engineer, it is practical to place the salvaged topsoil at the time of excavation or stripping, the material shall be placed in its final position without stockpiling or further rehandling.

* *

The Engineer shall specify the appropriate clearances in accordance with AC 150/5370-2, Operational Safety on Airports During Construction, Appendix 1.

* *

Upon completion of grading operations, stockpiled topsoil shall be handled and placed as directed, or as required in Item T-905.

No direct payment will be made for topsoil as such under Item P-152. The quantity removed and placed directly or stockpiled shall be paid for at the contract unit price per cubic yard (cubic meter) for "Unclassified Excavation."

When stockpiling of topsoil and later rehandling of such material is directed by the Engineer, the material so rehandled shall be paid for at the contract unit price per cubic yard (cubic meter) for "Topsoiling," as provided in Item T-905.

METHOD OF MEASUREMENT

152-3.1 The quantity of excavation to be paid for shall be the number of cubic yards (cubic meters) measured in its original position.

Measurement shall not include the quantity of materials excavated without authorization beyond normal slope lines, or the quantity of material used for purposes other than those directed.

152-3.2 Borrow material shall be paid for on the basis of the number of cubic yards (cubic meters) measured in its original position at the borrow pit.

152-3.3 Stockpiled material shall be paid for on the basis of the number of cubic yards (cubic meters) measured in the stockpiled position as soon as the material has been stockpiled.

* *

If the Engineer wishes to specify payment for he quantity of embankment in place in lieu of paying for excavation, delete paragraph 3.1 and substitute the following: The quantity of embankment to be paid for shall be the number of cubic yards (cubic meters) measured in its final position.

* *

152-3.4 For payment specified by the cubic yard (cubic meter), measurement for all **[excavation] [embankment]** shall be computed by the average end area method. The end area is that bound by the original ground line established by field cross sections and the final theoretical pay line established by **[excavation][embankment]** cross sections shown on the plans, subject to verification by the Engineer. After completion of all **[excavation][embankment]** operations and prior to the placing of base or subbase material, the final **[excavation][embankment]** shall be verified by the Engineer by means of field cross sections taken randomly at intervals not exceeding 500 linear feet (150 meters).

Final field cross sections shall be employed if the following changes have been made:

a. Plan width of embankments or excavations are changed by more than plus or minus 1.0 foot (0.3 meter); or

b. Plan elevations of embankments or excavations are changed by more than plus or minus 0.5 foot (0.15 meter).

BASIS OF PAYMENT

152-4.1 For "Unclassified excavation" payment shall be made at the contract unit price per cubic yard (cubic meter). This price shall be full compensation for furnishing all materials, labor, equipment, tools, and incidentals necessary to complete the item.

152-4.2 For "Rock Excavation" payment shall be made at the contract unit price per cubic yard (cubic meter). This price shall be full compensation for furnishing all materials, labor, equipment, tools, and incidentals necessary to complete the item.

152-4.3 For "Muck Excavation" payment shall be made at the contract unit price per cubic yard (cubic meter). This price shall be full compensation for furnishing all materials, labor, equipment, tools, and incidentals necessary to complete the item.

152-4.4 For "Drainage Excavation" payment shall be made at the contract unit price per cubic yard (cubic meter). This price shall be full compensation for furnishing all materials, labor, equipment, tools, and incidentals necessary to complete the item.

152-4.5 For "Borrow Excavation" payment shall be made at the contract unit price per cubic yard (cubic meter). This price shall be full compensation for furnishing all materials, labor, equipment, tools, and incidentals necessary to complete the item.

152-4.6 For "Stockpiled Material" payment shall be made at the contract unit price per cubic yard (cubic meter). This price shall be full compensation for furnishing all materials, labor, equipment, tools, and incidentals necessary to complete the item.

152-4.7 For "Embankment in Place" payment shall be made at the contract unit price per cubic yard (cubic meter). This price shall be full compensation for furnishing all materials, labor, equipment, tools, and incidentals necessary to complete the item.

Payment will be made under:

Item P-152-4.1	Unclassified Excavation--per cubic yard (cubic meter)
Item P-152-4.2	Rock Excavation--per cubic yard (cubic meter)
Item P-152-4.3	Muck Excavation--per cubic yard (cubic meter)
Item P-152-4.4	Drainage Excavation--per cubic yard (cubic meter)
Item P-152-4.5	Borrow Excavation--per cubic yard (cubic meter)
Item P-152-4.6	Stockpiled material--per cubic yard (cubic meter)
Item P-152-4.7	Embankment in Place--per cubic yard (cubic meter)

* *

The Engineer shall include only those classifications shown in the bid schedule.

* *

TESTING REQUIREMENTS

ASTM D 698	Tests for Moisture-Density Relations of Soils and Soil-Aggregate Mixtures, Using 5.5-pound (2.5 kg) Rammer and 12-inch (300 mm) Drop
ASTM D 1556	Test for Density of Soil In-Place by the Sand Cone Method
ASTM D 1557	Tests for Moisture-Density Relations of Soils and Soil-Aggregate Mixtures, Using 10-pound (4.5 kg) Rammer and 18-inch (45 cm) Drop
ASTM D 2167	Test for Density of Soil In-Place by the Rubber Balloon Method.

ITEM P-154 SUBBASE COURSE

DESCRIPTION

154-1.1 This item shall consist of a subbase course composed of granular materials constructed on a prepared subgrade or underlying course in accordance with these specifications, and in conformity with the dimensions and typical cross section shown on the plans.

MATERIALS

154-2.1 MATERIALS. The subbase material shall consist of hard durable particles or fragments of granular aggregates. This material will be mixed or blended with fine sand, clay, stone dust, or other similar binding or filler materials produced from approved sources. This mixture must be uniform and shall comply with the requirements of these specifications as to gradation, soil constants, and shall be capable of being compacted into a dense and stable subbase. the material shall be free from vegetable matter, lumps or excessive amounts of clay, and other objectionable or foreign substances. Pit-run material may be used, provided the material meets the requirements specified.

TABLE 1. GRADATION REQUIREMENTS

Sieve designation (square openings) as per ASTM C 136	Percentage by weight passing sieves
3 inch (75.0 mm)	100
No. 10 (2.0 mm)	20-100
No. 40 (0.450 mm)	5-60
No. 200 (0.075 mm)	0-15

The portion of the material passing the No. 40 (0.450 mm) sieve shall have a liquid limit of not more than 25 and a plasticity index of not more than 6 when tested in accordance with ASTM D 4318.

In those cases where frost penetration is a problem, the maximum amount of material finer than 0.02 mm in diameter shall be less than 3%.

CONSTRUCTION METHODS

154-3.1 GENERAL. The subbase course shall be placed where designated on the plans or as directed by the Engineer. The material shall be shaped and thoroughly compacted within the tolerances specified.

Granular subbases which, due to grain sizes or shapes, are not sufficiently stable to support without movement the construction equipment, shall be mechanically stabilized to the depth necessary to provide such stability as directed by the Engineer. The mechanical stabilization shall principally include the addition of a fine-grained medium to bind the particles of the subbase material sufficiently to furnish a bearing strength, so that the course will not deform under the traffic of the construction equipment. The addition of the binding medium to the subbase material shall not increase the soil constants of that material above the limits specified.

154-3.2 OPERATION IN PITS. All work involved in clearing and stripping pits and handling unsuitable material encountered shall be performed by the Contractor at his/her own expense. The subbase material shall be obtained from pits or sources that have been approved. The material in the pits shall be excavated and handled in such manner that a uniform and satisfactory product can be secured.

154-3.3 PREPARING UNDERLYING COURSE. Before any subbase material is placed, the underlying course shall be prepared and conditioned as specified. The course shall be checked and accepted by the Engineer before placing and spreading operations are started.

To protect the subgrade and to ensure proper drainage, the spreading of the subbase shall begin along the centerline of the pavement on a crowned section or on the high side of pavements with a one-way slope.

154-3.4 MATERIALS ACCEPTABLE IN EXISTING CONDITION. When the entire subbase material is secured in a uniform and satisfactory condition and contains approximately the required moisture, such approved material may be moved directly to the spreading equipment for placing. The material may be obtained from gravel pits, stockpiles, or may be produced from a crushing and screening plant with the proper blending. The materials from these sources shall meet the requirements for gradation, quality, and consistency. It is the intent of this section of the specifications to secure materials that will not require further mixing. The moisture content of the material shall be approximately that required to obtain maximum density. Any minor deficiency or excess of moisture may be corrected by surface sprinkling or by aeration. In such instances, some mixing or manipulation may be required, immediately preceding the rolling, to obtain the required moisture content. The final operation shall be blading or dragging, if necessary, to obtain a smooth uniform surface true to line and grade.

154-3.5 PLANT MIXING. When materials from several sources are to be blended and mixed, the subbase material shall be processed in a central or travel mixing plant. The subbase material, together with any blended material, shall be thoroughly mixed with the required amount of water. After the mixing is complete, the material shall be transported to and spread on the underlying course without undue loss of the moisture content.

154-3.6 MIXED IN PLACE. When materials from different sources are to be proportioned and mixed or blended in place, the relative proportions of the components of the mixture shall be as designated by the Engineer.

The subbase material shall be deposited and spread evenly to a uniform thickness and width. Then the binder, filler or other material shall be deposited and spread evenly over the first layer. There shall be as many layers of materials added as the Engineer may direct to obtain the required subbase mixture.

When the required amount of materials have been placed, they shall be thoroughly mixed and blended by means of graders, discs, harrows, rotary tillers, supplemented by other suitable equipment if necessary. The mixing shall continue until the mixture is uniform throughout. Areas of segregated material shall be corrected by the addition of binder or filler material and by thorough remixing. Water in the amount and as directed by the Engineer shall be uniformly applied prior to and during the mixing operations, if necessary, to maintain the material at its required moisture content. When the mixing and blending has been completed, the material shall be spread in a uniform layer which, when compacted, will meet the requirements of thickness and typical cross section.

154-3.7 GENERAL METHODS FOR PLACING. The subbase course shall be constructed in layers. Any layer shall be not less than 3 inches (75 mm) nor more than 8 inches (200 mm) of compacted thickness. The material, as spread, shall be of uniform gradation with no pockets of fine or coarse materials. The subbase, unless otherwise permitted by the Engineer, shall not be spread more than 2,000 square yards (1700 square meters) in advance of the rolling. Any necessary sprinkling shall be kept within this limit. No material shall be placed in snow or on a soft, muddy, or frozen course.

When more than one layer is required, the construction procedure described herein shall apply similarly to each layer.

During the placing and spreading, sufficient caution shall be exercised to prevent the incorporation of subgrade, shoulder, or foreign material in the subbase course mixture.

154-3.8 FINISHING AND COMPACTING. After spreading or mixing, the subbase material shall be thoroughly compacted by rolling and sprinkling, when necessary. Sufficient rollers shall be furnished to adequately handle the rate of placing and spreading of the subbase course.

The field density of the compacted material shall be at least 100 percent of the maximum density of laboratory specimens prepared from samples of the subbase material delivered to the jobsite. The laboratory specimens shall be compacted and tested in accordance with [ ]. The in-place field density shall be determined in accordance with ASTM D 1556 or ASTM D 2167. The moisture content of the material at the start of compaction shall not be below nor more than 1-1/2 percentage points above the optimum moisture content.

* *

The Engineer shall specify ASTM D 698 for areas designated for aircraft with gross weights of 60,000 pounds (27 200 kg) or less and ASTM D 1557 for areas designated for aircraft with gross weights greater than 60,000 pounds (27 200 kg).

* *

The course shall not be rolled when the underlying course is soft or yielding or when the rolling causes undulation in the subbase. When the rolling develops irregularities that exceed 1/2 inch (12 mm) when tested with a 16-foot (4.8 m) straightedge, the irregular surface shall be loosened and then refilled with the same kind of material as that used in constructing the course and again rolled as required above.

Along places inaccessible to rollers, the subbase material shall be tamped thoroughly with mechanical or hand tampers.

Sprinkling during rolling, if necessary, shall be in the amount and by equipment approved by the Engineer. Water shall not be added in such a manner or quantity that free water will reach the underlying layer and cause it to become soft.

154-3.9 SURFACE TEST. After the course is completed compacted, the surface shall be tested for smoothness and accuracy of grade and crown; any portion found to lack the required smoothness or to fail in accuracy of grade or crown shall be scarified, reshaped, recompacted, and otherwise manipulated as the Engineer may direct until the required smoothness and accuracy re obtained. The finished surface shall not vary more than 1/2 inch (12 mm) when tested with a 16-foot (4.8 m) straightedge applied parallel with, and at right angles to, the centerline.

154-3.11 THICKNESS. The thickness of the completed subbase course shall be determined by depth tests or cores taken at intervals so each test shall represent no more than 500 square yards (420 square meters). When the deficiency in thickness is more than 1/2 inch (12 mm), the Contractor shall correct such areas by scarifying, adding satisfactory mixture, rolling, sprinkling, reshaping, and finishing in accordance with these specifications. The Contractor shall replace at his/her expense the subbase material where borings are taken for test purposes.

154-3.12 PROTECTION. Work on subbase course shall not be conducted during freezing temperature nor when the subgrade is wet. When the subbase material contains frozen material or when the underlying course is frozen, the construction shall be stopped.

154-3.13 MAINTENANCE. Following the final shaping of the material, the subbase shall be maintained throughout its entire length by the use of standard motor graders and rollers until, in the judgment of the Engineer, the subbase meets all requirements and is acceptable for the construction of the next course.

METHOD OF MEASUREMENT

154-4.1 The yardage of subbase course to be paid for shall be the number of cubic yards (cubic meters) of subbase course material placed, compacted, and accepted in the completed course. The quantity of subbase course material shall be measured in final position based upon depth tests or cores taken as directed by the Engineer, or at the rate of 1 depth test for each 500 square yards (420 square meters) of subbase course, or by means of average end areas on the complete work computed from elevations to the nearest 0.01 foot (3 mm). On individual depth measurements, thicknesses more than 1/2 inch (12 mm) in excess of that shown on the plans shall be considered as the specified thickness plus 1/2 inch (12 mm) in computing the yardage for payment. Subbase materials shall not be included in any other excavation quantities.

BASIS OF PAYMENT

154-5.1 Payment shall be made at the contract unit price per cubic yard (cubic meter) for subbase course. This price shall be full compensation for furnishing all materials; for all preparation, hauling, and placing of these materials; and for all labor, equipment, tools, and incidentals necessary to complete the item.

Payment will be made under:

Item P-154-5.1	Subbase Course--per cubic yard (cubic meter)

TESTING REQUIREMENTS

ASTM C 136	Sieve or Screen Analysis of Fine and Coarse Aggregate
ASTM D 698	Moisture-Density Relations of Soils and Soil-Aggregate Mixtures Using 5.5 lb (2.49 kg) Rammer and 12-in (305 mm) Drop
ASTM D 1556	Density of Soil in Place by the Sand-Cone Method
ASTM D 1557	Moisture-Density Relations of Soils and Soil-Aggregate Mixtures Using 10-lb (4.5 kg) Rammer and 18-in (457 mm) Drop
ASTM D 2167	Density of Soil in Place by the Rubber-Ballon Method
ASTM D 4318	Liquid Limit, Plastic Limit, and Plasticity Index of Soils

ITEM P-155 LIME-TREATED SUBGRADE

DESCRIPTION

155-1.1 This item shall consist of constructing one or more courses of a mixture of soil, lime, and water in accordance with this specification, and in conformity with the lines, grades, thicknesses, and typical cross sections shown on the plans.

MATERIALS

155-2.1 HYDRATED LIME. Hydrated lime shall conform to the requirements of ASTM C 207, Type N.

155-2.2 COMMERCIAL LIME SLURRY. Commercial lime slurry shall be a pumpable suspension of solids in water. The water or liquid portion of the slurry shall not contain dissolved material in sufficient quantity naturally injurious or objectionable for the purpose intended. The solids portion of the mixture, when considered on the basis of "solids content," shall consist principally of hydrated lime of a quality and fineness sufficient to meet the following requirements as to chemical composition and residue.

a. Chemical Composition. The "solids content" of the lime slurry shall consist of a minimum of 70%, by weight, of calcium and magnesium oxides.

b. Residue. The percent by weight of residue retained in the "solids content" of lime slurry shall conform to the following requirements:

Residue retained on a No. 6 (3360 micron) sieve ——— Max. 0.0%
Residue retained on a No. 10 (2000 micron) sieve ——— Max. 1.0%
Residue retained on a No. 30 (590 micron) sieve ——— Max. 2.5%

c. Grade. Commercial lime slurry shall conform to one of the following two grades:

Grade 1. The "dry solids content" shall be at least 31% by weight, of the slurry.
Grade 2. The "dry solids content" shall be at least 35%, by weight, of the slurry.

155-2.3 WATER. Water used for mixing or curing shall be reasonably clean and free of oil, salt, acid, alkali, sugar, vegetable, or other substances injurious to the finished product. Water shall be tested in accordance with and shall meet the suggested requirements of AASHO T 26. Water known to be of potable quality may be used without test.

155-2.4 SOIL. The soil for this work shall consist of materials on the site or selected materials from other sources and shall be uniform in quality and gradation, and shall be approved by the Engineer. The soil shall be free of roots, sod, weeds, and stones larger than 2-1/2 inches (60 mm).

COMPOSITION

155-3.1 LIME. Lime shall be applied at the rate specified on the plans for the depth of subgrade treatment shown.

155-3.2 TOLERANCES. At final compaction, the lime and water content for each course of subgrade treatment shall conform to the following tolerances:

Material	Tolerance
Lime	+ 0.5%
Water	+ 2%, -0%

WEATHER LIMITATIONS

155-4.1 WEATHER LIMITATION. The lime-treated subgrade shall not be mixed while the atmospheric temperature is below 40° F (4° C) or when conditions indicate that temperatures may fall below 40° F (4° C) within 24 hours, when it is foggy or rainy, or when soil or subgrade is frozen.

EQUIPMENT

155-5.1 EQUIPMENT. The equipment required shall include all equipment necessary to complete this item such as: grading and scarifying equipment, a spreader for the lime or lime slurry, mixing or pulverizing equipment, sheepsfoot and pneumatic or vibrating rollers, sprinkling equipment, and trucks.

CONSTRUCTION METHODS

155-6.1 GENERAL. It is the primary requirement of this specification to secure a completed subgrade containing a uniform lime mixture, free from loose or segregated areas, of uniform density and moisture content, well bound for its full depth, and with a smooth surface suitable for placing subsequent courses. It shall be the responsibility of the Contractor to regulate the sequence of his/her work, to use the proper amount of lime, maintain the work, and rework the courses as necessary to meet the above requirements.

Prior to beginning any lime treatment the subgrade shall be constructed and brought to grade as specified in Item P-152 "Excavation and Embankment" and shall be shaped to conform to the typical sections, lines, and grades as shown on the plans. The material to be treated shall then be excavated to the secondary grade (proposed bottom of lime treatment) and removed or windrowed to expose the secondary grade. Any wet or unstable materials below the secondary grade shall be corrected, as directed by the Engineer, by scarifying, adding lime, and compacting until it is of uniform stability. The excavated material shall then be spread to the desired cross section.

If the Contractor elects to use a cutting and pulverizing machine that will remove the subgrade material accurately to the secondary grade and pulverize the material at the same time, he will not be required to expose the secondary grade nor windrow the material. However, the Contractor shall be required to roll the subgrade, as directed by the Engineer, and correct any soft areas that this rolling may reveal before using the pulverizing machine. This method will be permitted only where a machine is provided which will ensure that the material is cut uniformly to the proper depth and which has cutters that will plane the secondary grade to a smooth surface over the entire width of the cut. The machine must give visible indication at all times that it is cutting to the proper depth.

155-6.2 APPLICATION. Lime shall be spread only on that area where the first mixing operations can be completed during the same working day. The application and mixing of lime with the soil shall be accomplished by the methods hereinafter described as "Dry Placing" or "Slurry Placing." Whey hydrated lime is specified, the Contractor may use either method.

a. Dry Placing. The lime shall be spread uniformly over the top of the subgrade by an approved screw-type spreader box or other approved spreading equipment. The amount of lime spread shall be the amount required for mixing to the specified depth which will result in the percentage determined in the job mix formula.

The lime shall be distributed in such manner that scattering by wind will be minimal. Lime shall not be applied when wind conditions, in the opinion of the Engineer, are detrimental to a proper application. A motor grader shall not be used to spread the lime. The material shall be sprinkled, as directed by the Engineer, until the proper moisture content has been reached.

b. Slurry Placing. The lime shall be mixed with water in trucks with approved distributors and applied as a thin water suspension or slurry. Commercial lime slurry shall be applied with a lime percentage not less than that applicable for the grade used. The distribution of lime shall be attained by successive passes over a measured section of subgrade until the proper amount of lime has been spread. The amount of

lime spread shall be the amount required for mixing to the specified depth which will result in the percentage determined in the job mix formula. The distributor truck shall continually agitate the slurry to keep the mixture uniform.

155-6.3 MIXING. The mixing procedure shall be the same for "Dry Placing" or "Slurry Placing" as hereinafter described:

a. First mixing. The full depth of the treated subgrade shall be mixed with an approved mixing machine. Lime shall not be left exposed for more than 6 hours. The mixing machine shall make two coverages. Water shall be added to the subgrade during mixing to provide a moisture content above the optimum moisture of the material and to ensure chemical action of the lime and subgrade. After mixing, the subgrade shall be lightly rolled to seal the surface and help prevent evaporation of moisture. The water content of the subgrade mixture shall be maintained at a moisture content above the optimum moisture content for a minimum of 48 hours or until the material becomes friable. During the curing period, the material shall be sprinkled as directed. During the interval of time between application and mixing, lime that has been exposed to the open air for 6 hours or more, or to excessive loss due to washing or blowing will not be accepted for payment.

b. Final Mixing. After the required curing time, the material shall be uniformly mixed by approved methods. If the mixture contains clods, they shall be reduced in size by glading, discing, harrowing, scarifying, or the use of other approved pulverization methods so that the remainder of the clods shall meet the following requirements when tested dry by laboratory sieves:

	Percent
Minimum of clods passing 1½ inch sieve	100
Minimum of clods passing No. 4 sieve	60

155-6.4 COMPACTION. Compaction of the mixture shall begin immediately after final mixing. The material shall be aerated or sprinkled as necessary to provide optimum moisture. The field density of the compacted mixture shall be at least 93 percent of the maximum density of laboratory specimens prepared from samples taken from the material in place. The specimens shall be compacted and tested in accordance with ASTM D 698. The in-place field density shall be determined in accordance with ASTM D 1556 or ASTM D 2167. Any mixture that has not been compacted shall not be left undisturbed for more than 30 minutes. The moisture content of the mixture at the start of compaction shall not be below nor more than 2 percentage points above the optimum moisture content. The optimum moisture content shall be determined in accordance with ASTM D 698 and shall be less than that amount which will cause the mixture to become unstable during compaction and finishing.

The material shall be sprinkled and rolled as directed by the Engineer. All irregularities, depressions, or weak spots which develop shall be corrected immediately by scarifying the areas affected, adding or removing material as required, and reshaping and recompacting by sprinkling and rolling. The surface of the course shall be maintained in a smooth condition, free from undulations and ruts, until other work is placed thereon or the work is accepted.

In addition to the requirements specified for density, the full depth of the material shown on the plans shall be compacted to the extent necessary to remain firm and stable under construction equipment. After each section is completed, tests will be made by the Engineer. If the material fails to meet the density requirements, it shall be reworked to meet these requirements. Throughout this entire operation, the shape of the course shall be maintained by blading, and the surface upon completion shall be smooth and shall conform with the typical section shown on the plans and to the established lines and grades. Should the material, due to any reason or cause, lose the required stability, density, and finish before the next course is placed or the work is accepted, it shall be recompacted and refinished at the sole expense of the Contractor.

155-6.5 FINISHING AND CURING. After the final layer or course of lime-treated subgrade has been compacted, it shall be brought to the required lines and grades in accordance with the typical sections. The completed section shall then be finished by rolling, as directed, with a pneumatic or other suitable roller sufficiently light to prevent hair cracking. The finished surface shall not vary more than 3/8 inch (9 mm)

when tested with a 16-foot (4.8 meter) straightedge applied parallel with and at right angles to the pavement centerline. Any variations in excess of this tolerance shall be corrected by the Contractor, at his/her own expense, in a manner satisfactory to the Engineer.

The completed section shall be moist-cured for a minimum of 7 days before further courses are added or any traffic is permitted, unless otherwise directed by the Engineer. Subsequent courses shall be applied within 14 days after the lime-treated subgrade is cured.

155-6.6 THICKNESS. The thickness of the lime-treated subgrade shall be determined by depth tests or cores taken at intervals so that each test shall represent no more than 300 square yards (250 square meters). When the base deficiency is more than 1/2 inch (12 mm), the Contractor shall correct such areas in a manner satisfactory to the Engineer. The Contractor shall replace, at his/her expense, the base material where borings are taken for test purposes.

155-6.7 MAINTENANCE. The Contractor shall maintain, at his/her own expense, the entire lime-treated subgrade in good condition from the start of work until all the work has been completed, cured, and accepted by the Engineer.

METHOD OF MEASUREMENT

155-7.1 The yardage of lime-treated subgrade to be paid for shall be the number of square yards (square meters) completed and accepted.

155-7.2 The amount of lime to be paid for shall be the number of pounds (kg) of hydrated lime (or the calculated dry-lime content of the lime slurry) used as authorized.

BASIS OF PAYMENT

155-8.1 Payment shall be made at the contract unit price per square yard (square meter) for the lime-treated subgrade of the thickness specified. the price shall be full compensation for furnishing all material, except the lime, and for all preparation, delivering, placing and mixing these materials, and all labor, equipment, tools and incidentals necessary to complete this item.

155-8.2 Payment shall be made at the contract unit price per pound (kg) of lime. This price shall be full compensation for furnishing this material; for all delivery, placing and incorporation of this material; and for all labor, equipment, tools, and incidentals necessary to complete this item.

Payment will be made under:

Item P-155-8.1	Lime-treated subgrade—per square yard (square meter)
Item P-155-8.2	Lime--per pound (kg)

TESTING REQUIREMENTS

ASTM D 698	Moisture-Density Relations of Soils and Soil-Aggregate Mixtures Using 5.5 lb (2.49 kg) Rammer and 12-in. (305 mm) Drop
ASTM D 1556	Density of Soil in Place by the Sand-Cone Method
ASTM D 2167	Density of Soil in Place by the Rubber-Ballon Method
AASHTO T 26	Quality of Water to be Used in Concrete

MATERIAL REQUIREMENTS

ASTM C 207	Hydrated Lime for Masonry Purposes

ITEM P-156 TEMPORARY AIR AND WATER POLLUTION, SOIL EROSION, AND SILTATION CONTROL

DESCRIPTION

156-1.1 This item shall consist of temporary control measures as shown on the plans or as ordered by the Engineer during the life of a contract to control water pollution, soil erosion, and siltation through the use of berms, dikes, dams, sediment basins, fiber mats, gravel, mulches, grasses, slope drains, and other erosion control devices or methods.

The temporary erosion control measures contained herein shall be coordinated with the permanent erosion control measures specified as part of this contract to the extent practical to assure economical, effective, and continuous erosion control throughout the construction period.

Temporary control may include work outside the construction limits such as borrow pit operations, equipment and material storage sites, waste areas, and temporary plant sites.

MATERIALS

156-2.1 GRASS. Grass which will not compete with the grasses sown later for permanent cover shall be a quick-growing species (such as ryegrass, Italian ryegrass, or cereal grasses) suitable to the area providing a temporary cover.

156-2.2 MULCHES. Mulches may be hay, straw, fiber mats, netting, bark, wood chips, or other suitable material reasonably clean and free of noxious weeds and deleterious materials.

156-2.3 FERTILIZER. Fertilizer shall be a standard commercial grade and shall conform to all Federal and state regulations and to the standards of the Association of Official Agricultural Chemists.

156-2.4 SLOPE DRAINS. Slope drains may be constructed of pipe, fiber mats, rubble, portland cement concrete, bituminous concrete, or other materials that will adequately control erosion.

156-2.5 OTHER. All other materials shall meet commercial grade standards and shall be approved by the Engineer before being incorporated into the project.

CONSTRUCTION REQUIREMENTS

156-3.1 GENERAL. In the event of conflict between these requirements and pollution control laws, rules, or regulations of other Federal, state, or local agencies, the more restrictive laws, rules, or regulations shall apply.

The Engineer shall be responsible for assuring compliance to the extent that construction practices, construction operations, and construction work are involved.

* *

Some states, municipalities, and pollution control authorities have very specific regulations for air and water pollution controls. These may include requirements for:

Use of smoke density charts.

Measurement of weight and density (micrograms per cubic meter of air) of suspended particulate.

Permissible weights of emission in pounds per hour (kilograms per hour) versus pounds per hour (kilograms per hour) of material processed.

Open burning.

Erosion control measures.

* *

156-3.2 SCHEDULE. Prior to the start of construction, the Contractor shall submit schedules for accomplishment of temporary and permanent erosion control work, as are applicable for clearing and grubbing; grading; construction; paving; and structures at watercourses. The Contractor shall also submit a proposed method of erosion and dust control on haul roads and borrow pits and a plan for disposal of waste materials. Work shall not be started until the erosion control schedules and methods of operation for the applicable construction have been accepted by the Engineer.

* *

Several methods of controlling dust and other air pollutants include:

Exposing the minimum area of erodible earth.

Applying temporary mulch with or without seeding.

Using water sprinkler trucks.

Using covered haul trucks.

Using dust palliatives or penetration asphalt on haul roads.

Using plastic sheet coverings.

* *

156-3.3 AUTHORITY OF ENGINEER. The Engineer has the authority to limit the surface area of erodible earth material exposed by clearing and grubbing, to limit the surface area of erodible earth material exposed by excavation, borrow and fill operations, and to direct the Contractor to provide immediate permanent or temporary pollution control measures to minimize contamination of adjacent streams or other watercourses, lakes, ponds, or other areas of water impoundment.

156-3.4 CONSTRUCTION DETAILS. The Contractor will be required to incorporate all permanent erosion control features into the project at the earliest practicable time as outlined in the accepted schedule. Except where future construction operations will damage slopes, the Contractor shall perform the permanent seeding and mulching and other specified slope protection work in stages, as soon as substantial areas of exposed slopes can be made available. Temporary erosion and pollution control measures will be used to correct conditions that develop during construction that were not foreseen during the design stage; that are needed prior to installation of permanent control features; or that are needed temporarily to control erosion that develops during normal construction practices, but are not associated with permanent control features on the project.

Where erosion is likely to be a problem, clearing and grubbing operations should be scheduled and performed so that grading operations and permanent erosion control features can follow immediately thereafter if the project conditions permit; otherwise, temporary erosion control measures may be required between successive construction stages.

The Engineer will limit the area of clearing and grubbing, excavation, borrow, and embankment operations in progress, commensurate with the Contractor's capability and progress in keeping the finish grading, mulching, seeding, and other such permanent control measures current in accordance with the accepted schedule. Should seasonal limitations make such coordination unrealistic, temporary erosion control measures shall be taken immediately to the extent feasible and justified.

In the event that temporary erosion and pollution control measures are required due to the Contractor's negligence, carelessness, or failure to install permanent controls as a part of the work as scheduled or are ordered by the Engineer, such work shall be performed by the Contractor at his/her own expense.

The Engineer may increase or decrease the area of erodible earth material to be exposed at one time as determined by analysis of project conditions.

The erosion control features installed by the Contractor shall be acceptably maintained by the Contractor during the construction period.

Whenever construction equipment must cross watercourses at frequent intervals, and such crossings will adversely affect the sediment levels, temporary structures should be provided.

Pollutants such as fuels, lubricants, bitumen, raw sewage, wash water from concrete mixing operations, and other harmful materials shall not be discharged into or near rivers, streams, and impoundments or into natural or manmade channels leading thereto.

METHOD OF MEASUREMENT

156–4.1 Temporary erosion and pollution control work required which is not attributed to the Contractor's negligence, carelessness, or failure to install permanent controls will be performed as scheduled or ordered by the Engineer. Completed and accepted work will be measured as follows:

a. Temporary seeding and mulching will be measured by the square yard (square meter).

b. Temporary slope drains will be measured by the linear foot (meter).

c. Temporary benches, dikes, dams, and sediment basins will be measured by the cubic yard (cubic meter) of excavation performed, including necessary cleaning of sediment basins, and the cubic yard (cubic meter) of embankment placed at the direction of the Engineer, in excess of plan lines and elevations.

d. All fertilizing will be measured by the ton (kilogram).

156–4.2 Control work performed for protection of construction areas outside the construction limits, such as borrow and waste areas, haul roads, equipment and material storage sites, and temporary plant sites, will not be measured and paid for directly but shall be considered as a subsidiary obligation of the Contractor with costs included in the contract prices bid for the items to which they apply.

BASIS OF PAYMENT

156–5.1 Accepted quantities of temporary water pollution, soil erosion, and siltation control work ordered by the Engineer and measured as provided in paragraph 156–4.1 will be paid for under:

Item P–156–5.1	Temporary seeding and mulching—per square yard (square meter)
Item P–156–5.2	Temporary slope drains—per linear foot (meter)
Item P–156–5.3	Temporary benches, dikes, dams and sediment basins—per cubic yard (cubic meter)
Item P–156–5.4	Fertilizing—per ton (kilogram)

Where other directed work falls within the specifications for a work item that has a contract price, the units of work shall be measured and paid for at the contract unit price bid for the various items.

Temporary control features not covered by contract items that are ordered by the Engineer will be paid for in accordance with Section 90–05.

PART III—FLEXIBLE BASE COURSES

ITEM P-208 AGGREGATE BASE COURSE

DESCRIPTION

208-1.1 This item shall consist of a base course composed of **[crushed][uncrushed]** coarse aggregate bonded with either soil or fine aggregate or both. It shall be constructed on a prepared underlying course in accordance with these specifications and shall conform to the dimensions and typical cross section shown on the plans.

MATERIALS

208-2.1 UNCRUSHED COARSE AGGREGATE. The base course material shall consist of hard, durable particles or fragments of stone or gravel mixed or blended with sand, stone dust, or other similar binding or filler materials produced from approved sources. All oversized stones, rocks and boulders occurring in the pit or quarry material shall be wasted; those of acceptable quality may be crushed and become a part of the base material, provided the blend meets the specified gradations. The aggregate shall be free from vegetation, lumps, or excessive amounts of clay and other objectionable substances. The coarse aggregate shall have a percent of wear not more than 45 at 500 revolutions as determined by ASTM C 131.

208-2.2. CRUSHED COARSE AGGREGATE. The aggregates shall consist of both fine and coarse fragments of crushed stone, crushed slag, or crushed gravel mixed or blended with sand, screenings, or other similar approved materials. The crushed stone shall consist of hard, durable particles or fragments of stone and shall be free from excess flat, elongated, soft or disintegrated pieces, dirt, or other objectionable matter.

The crushed slag shall be air-cooled, blast furnace slag and shall consist of angular fragments reasonably uniform in density and quality and shall be reasonably free from thin, elongated, or soft pieces, dirt, and other objectionable matter. It shall weigh not less than 70 pounds per cubic foot (1.12 Mg/cubic meter) as determined by ASTM C 29.

The crushed gravel shall consist of hard, durable stones, rock, and boulders crushed to specified size and shall be free from excess flat, elongated, soft or disintegrated pieces, dirt, or other objectionable matter. The method used in production of crushed gravel shall be such that the fractured particles occurring in the finished product shall be as nearly constant and uniform as practicable and shall result in at least the specified percentage of material retained on a No. 4 mesh (4.75 mm) sieve having one or more fractured faces.

If necessary to meet this requirement or to eliminate an excess of fine, uncrushed particles, the gravel shall be screened before crushing. All stones, rocks, and boulders of inferior quality in the pit shall be wasted.

The crushed coarse aggregate shall have a percent of wear not more than 50 at 500 revolutions as determined by ASTM C 131.

All material passing the No. 4 mesh (4.75 mm) sieve produced in the crushing operation of either stone, slag, or gravel shall be incorporated in the base material to the extent permitted by the gradation requirements.

208-2.3 GRADATION. The gradation of the uncrushed or crushed material shall meet the requirements of one of the gradations given in Table 1 when tested in accordance with ASTM C 117 and C 136.

TABLE 1. REQUIREMENTS FOR GRADATION OF AGGREGATE

Sieve Designation (square openings)	Percentage by weight passing sieves		
	2" maximum	1½" maximum	1" maximum
2 inch (50.0 mm)	100	—	—
1½ inch (37.0 mm)	—	100	—
1 inch (25.0 mm)	55–85	70–95	100
¾ inch (13.0 mm)	50–80	55–85	70–100
No. 4 (4.75 mm)	30–60	30–60	35–65
No. 40 (0.45 mm)	10–30	10–30	15–30
No. 200 (0.075 mm)	5–15	5–15	5–15

The gradations in the table represent the limits which shall determine suitability of aggregate for use from the sources of supply. The final gradations decided on within the limits designated in the table shall be well graded from coarse to fine and shall not vary from the low limit on one sieve to the high limit on the adjacent sieves, or vice versa.

The amount of the fraction of material passing the No. 200 mesh (0.075 mm) sieve shall not exceed one-half the fraction passing the No. 40 mesh (0.45 mm) sieve.

The portion of the filler and binder, including any blended material, passing the No. 40 mesh (0.45 mm) sieve have a liquid limit not more than 25 and a plasticity index not more than 6 when tested in accordance with ASTM D 4318.

The selection of any of the gradations shown in the table shall be such that the maximum size aggregate used in any course shall be not more than two-thirds the thickness of the layer of the course being constructed.

208-2.4 FILLER FOR BLENDING. If filler, in addition to that naturally present in the base course material, is necessary for satisfactory bonding of the material, for changing the soil constants of the material passing the No. 40 mesh (0.45 mm) sieve, or for correcting the gradation to the limitations of the specified gradation, it shall be uniformly blended with the base course material at the crushing plant or at the mixing plant. The material for such purpose shall be obtained from sources approved by the Engineer and shall be of a gradation necessary to accomplish the specified gradation in the finally processed material.

The additional filler may be composed of sand, but the amount of sand shall not exceed 20% by weight of the total combined base aggregate. All the sand shall pass a No. 4 mesh (0.45 mm) sieve and not more than 5% by weight shall pass a No. 200 mesh (4.75 mm) sieve.

CONSTRUCTION METHODS

208-3.1 OPERATIONS IN PITS AND QUARRIES. All work involved in clearing and stripping pits and quarries, including handling of unsuitable material, shall be performed by the Contractor. All material shall be handled in a manner that shall secure a uniform and satisfactory base product. The base course material shall be obtained from sources that have been approved.

208-3.2 PREPARING UNDERLYING COURSE. The underlying course shall be checked and accepted by the Engineer before placing and spreading operations are started. Any ruts or soft, yielding places due to improper drainage conditions, hauling, or any other cause, shall be corrected and rolled to the required density before the base course is placed thereon.

To protect the underlying course and to ensure proper drainage, the spreading of the base shall begin along the centerline of the pavement on a crowned section or on the high side of the pavement with a one-way slope.

208-3.3 METHODS OF PRODUCTION

a. Plant Mix. When provided in the proposal, or when selected by the Contractor and approved by the Engineer, the base material shall be uniformly blended or mixed in an approved plant. The mixing plant shall include bins for storage and batching of the aggregate, pump and tanks for water, and batch mixers of either the pugmill or drum type. All mineral aggregates shall be batched into the mixer by weight. The agitation shall be such that a thorough dispersion of moisture is obtained. The size of the batch and the time of mixing shall be fixed by the Engineer and shall produce the results and requirements specified. The base course material produced by combining two or more materials from different sources shall be mixed in a mixing plant described herein. The mixture material shall be at a satisfactory moisture content to obtain maximum density.

b. Travel Plant. When the use of a traveling plant is allowed, the plant shall blend and mix the materials to meet these specifications. It shall accomplish a thorough mixing in one trip. The agitation shall be such that the dispersion of the moisture is complete. The machine shall move at a uniform rate of speed and this speed shall be regulated to fix the mixing time. If a windrow-type of travel plant is employed for mixing, the aggregate shall be placed in windrows parallel to the pavement centerline.

The windrow volume shall be sufficient to cover exact areas as planned. The windrow contents shall produce a mixture of the required gradation and bonding qualities. If a travel plant is used which is of the type that mixes previously spread aggregates in-place, the material shall have been spread in such thickness and proportions as may be handled by the machine to develop a base course of the thickness of each layer and of the gradation required. With either type of equipment, the mixed material shall be at a satisfactory moisture content to obtain the maximum density.

c. Proportioning or Blending In-Place. When the base materials are to be proportioned and mixed or blended in-place, the different layers shall be placed and spread with the relative proportions of the components of the mixture being designated by the Engineer. The base aggregate shall be deposited and spread evenly to a uniform thickness and width. Then the binder or filler shall be deposited and spread evenly over the first layer. There shall be as many layers of materials added as the Engineer may direct to obtain the required gradation and layer thickness. When the required amount of materials have been placed, they shall be thoroughly mixed and blended by means of approved graders, discs, harrows, rotary tillers, or a machine capable of combining these operations, supplemented by other suitable equipment if necessary. The mixing shall continue until the mixture is uniform throughout and accepted by the Engineer. Areas of segregated material shall be corrected by the addition of needed material and by remixing. Water shall be uniformly applied, prior and during the mixing operation if necessary to maintain the material at the proper moisture content. When the mixing and blending have been completed, the material shall be bladed and dragged, if necessary, until a smooth uniform surface is obtained, true to line and grade.

d. Materials of Proper Gradation. When the entire base course material from coarse to fine is secured in a uniform and well-graded condition and contains approximately the proper moisture, such approved material may be handled directly to the spreading equipment. The material may be obtained from gravel pits, stockpiles, or produced from a crushing and screening plant with the proper blending. The materials from these sources shall meet the requirements for gradation, quality, and consistency. The intent of this section of these specifications is to secure materials that will not require further mixing. The base material shall be at a satisfactory moisture content to obtain maximum density. Any minor deficiency or excess of moisture may be corrected by surface sprinkling or by aeration. In such instances some mixing or manipulation may be required immediately preceding the rolling to obtain the required moisture content. The final operation shall be blading or dragging, if necessary, to obtain a smooth uniform surface true to line and grade.

208-3.4 PLACING.

a. The aggregate base material that is correctly proportioned, or has been processed in a plant, shall be placed on the prepared underlying course and compacted in layers of the thickness shown on the plans. The depositing and spreading of the material shall commence where designated and shall progress continuously without breaks. The material shall be deposited and spread in lanes in a uniform layer and without segregation of size to such loose depth that, when compacted, the layer shall have the required thickness. The base aggregate shall be spread by spreader boxes or other approved devices having positive thickness controls that shall spread the aggregate in the required amount to avoid or minimize the need for hand

manipulation. Dumping from vehicles in piles which require rehandling shall not be permitted. Hauling over the uncompacted base course shall not be permitted.

b. The aggregate base material that has been processed in a traveling plant, or mixed and blended in-place, shall be spread in a uniform layer of required depth and width and to the typical cross section. The spreading shall be by a self-powered blade grader, mechanical spreader, or other approved method. In spreading, care shall be taken to prevent cutting into the underlying layer. The material shall be bladed until a smooth, uniform surface is obtained, true to line and grade.

c. The base course shall be constructed in a layer not less than 3 inches (75 mm) nor more than 6 inches (150 mm) of compacted thickness. The aggregate as spread shall be of uniform grading with no pockets of fine or coarse materials. The aggregate, unless otherwise permitted by the Engineer, shall not be spread more than 2,000 square yards (1700 square meters) in advance of the rolling. Any necessary sprinkling shall be kept within these limits. No material shall be placed in snow or on a soft, muddy, or frozen course.

When more than one layer is required, the construction procedure described herein shall apply similarly to each layer.

During the mixing and spreading process, sufficient caution shall be exercised to prevent the incorporation of subgrade, subbase, or shoulder material in the base course mixture.

208-3.5 COMPACTION. Immediately upon completion of the spreading operations, the aggregate shall be thoroughly compacted. The number, type, and weight of rollers shall be sufficient to compact the material to the required density.

The moisture content of the material during placing operations shall not be below, nor more than 1-1/2 percentage points above, the optimum moisture content as determined by ASTM [ ].

208-3.6 ACCEPTANCE SAMPLING AND TESTING FOR DENSITY. Aggregate base course shall be accepted for density on a lot basis. A lot will consist of one day's production where it is not expected to exceed 2400 square yards (2000 square meters). A lot will consist of one-half day's production where a day's production is expected to consist of between 2400 and 4800 square yards (2000 and 4000 square meters).

Each lot shall be divided into two equal sublots. One test shall be made for each sublot. Sampling locations will be determined by the Engineer on a random basis in accordance with statistical procedures contained in ASTM D 3665.

Each lot will be accepted for density when the field density is at least 100 percent of the maximum density of laboratory specimens prepared from samples of the material delivered to the jobsite. The specimens shall be compacted and tested in accordance with ASTM [ ]. The in-place field density shall be determined in accordance with ASTM D 1556 or D 2167. If the specified density is not attained, the entire lot shall be reworked and/or recompacted and two additional random tests made. This procedure shall be followed until the specified density is reached.

* *

The Engineer shall specify ASTM D 698 for areas designated for aircraft with gross weights of 60,000 pounds (27 200 kg) or less and ASTM D 1557 for areas designated for aircraft with gross weights greater than 60,000 pounds (27 200 kg).

* *

208-3.7 SURFACE TEST. After the course has been completely compacted, the surface shall be tested for smoothness and accuracy of grade and crown. Any portion lacking the required smoothness or failing in accuracy of grade or crown shall be scarified, reshaped, recompacted, and otherwise manipulated as the Engineer may direct until the required smoothness and accuracy are obtained. The finished surface shall not vary more than 3/8 inch (9 mm) from a 16-foot (4.8 m) straightedge when applied to the surface parallel width, and at right angles to, the centerline.

208-3.8 THICKNESS. The thickness of the base course shall be determined by depth tests or cores taken at intervals in such manner that each test shall represent no more than 300 square yards (250 square meters).

When the base deficiency is more than 1/2 inch (12 mm), the Contractor shall correct such areas by scarifying, adding satisfactory base mixture, rolling, sprinkling, reshaping, and finishing in accordance with these specifications. The Contractor shall replace, at his/her expense, the base material where borings have been taken for test purposes.

208-3.9 PROTECTION. Work on the base course shall not be accomplished during freezing temperatures nor when the subgrade is wet. When the aggregates contain frozen materials or when the underlying course is frozen, the construction shall be stopped.

Hauling equipment may be routed over completed portions of the base course, provided no damage results and provided that such equipment is routed over the full width of the base course to avoid rutting or uneven compaction. However, the Engineer in charge shall have full and specific authority to stop all hauling over completed or partially completed base course when, in his/her opinion, such hauling is causing damage. Any damage resulting to the base course from routing equipment over the base course shall be repaired by the Contractor at his/her own expense.

208-3.10 MAINTENANCE. Following the completion of the base course, the Contractor shall perform all maintenance work necessary to keep the base course in a condition satisfactory for priming. After priming, the surface shall be kept clean and free from foreign material. The base course shall be properly drained at all times. If cleaning is necessary, or if the prime coat becomes disturbed, any work or restitution necessary shall be performed at the expense of the Contractor.

Before preparations begin for the application of a surface treatment or for a surface course, the base course shall be allowed to partially dry until the average moisture content of the full depth of base is less than 80% of the optimum moisture of the base mixture. The drying shall not continue to the extent that the surface of the base becomes dusty with consequent loss of binder. If during the curing period the surface of the base dries too fast, it shall be kept moist by sprinkling until such time as the prime coat is applied as directed.

METHOD OF MEASUREMENT

208-4.1 The quantity of **[uncrushed][crushed]** aggregate base course to be paid for shall be the number of cubic yards (cubic meters) of base course material placed, bonded, and accepted in the completed base course. The quantity of base course material shall be measured in final position based upon depth test, or cores taken as directed by the Engineer, or at the rate of 1 depth test for each 300 square yards (250 square meters) of base course, or by means of average end areas on the complete work computed from elevations to the nearest 0.01 foot (3 mm). On individual depth measurements, thicknesses more than 1/2 inch (12 mm) in excess of that shown on the plans shall be considered as specified thickness plus 1/2 inch (12 mm) in computing the yardage for payment. Base materials shall not be included in any other excavation quantities.

BASIS OF PAYMENT

208-5.1 Payment shall be made at the contract unit price per cubic yard (cubic meter) for aggregate base course. This price shall be full compensation for furnishing all materials and for all operations, hauling, and placing of these materials, and for all labor, equipment, tools, and incidentals necessary to complete the item.

Payment will be made under:

Item P-208-5.1	**[Uncrushed][Crushed]** Aggregate Base Course--per cubic yard (cubic meter)

TESTING REQUIREMENTS

ASTM C 29	Unit Weight of Aggregate
ASTM C 117	Materials Finer than 75um (No. 200) Sieve in Mineral Aggregates by Washing

ASTM C 131	Resistance to Abrasion of Small Size Coarse Aggregate by Use of the Los Angeles Machine
ASTM C 136	Sieve or Screen Analysis of Fine and Coarse Aggregate
ASTM D 698	Moisture-Density Relations of Soils and Soil-Aggregate Mixtures Using 5.5 lb (2.49 kg) Rammer and 12-in (305 mm) Drop
ASTM D 1556	Density of Soil in Place by the Sand-Cone Method
ASTM D 1557	Moisture-Density Relations of Soils and Soil-Aggregate Mixtures Using 10-lb (4.5 kg) Rammer and 18-in (457 mm) Drop
ASTM D 2167	Density of Soil in Place by the Rubber-Ballon Method
ASTM D 3665	Random Sampling of Paving Materials
ASTM D 4318	Liquid Limit, Plastic Limit, and Plasticity Index of Soils

ITEM P-209 CRUSHED AGGREGATE BASE COURSE

DESCRIPTION

209-1.1 This item consists of a base course composed of crushed aggregates constructed on a prepared course in accordance with these specifications and in conformity to the dimensions and typical cross sections shown on the plans.

MATERIALS

209-2.1 AGGREGATE. Aggregates shall consist of clean, sound, durable particles of crushed stone, crushed gravel, or crushed slag and shall be free from coatings of clay, silt, vegetable matter, and other objectionable materials and shall contain no clay balls. Fine aggregate passing the No. 4 (4.75 mm) sieve shall consist of fines from the operation of crushing the coarse aggregate. If necessary, fine aggregate may be added to produce the correct gradation. The fine aggregate shall be produced by crushing stone, gravel, or slag that meet the requirements for wear and soundness specified for coarse aggregate.

The crushed slag shall be an air-cooled, blast furnace slag and shall have a unit weight of not less than 70 pounds per cubic foot (1.12 Mg/cubic meter) when tested in accordance with ASTM C 29.

The crushed aggregate portion which is retained on the No. 4 (4.75 mm) sieve shall contain not more than 15 percent, by weight, of flat or elongated pieces as defined in ASTM D 693 and shall have at least 90 percent by weight of particles with at least two fractured faces and 100 percent with at least one fractured face. The area of each face shall be equal to at least 75 percent of the smallest midsectional area of the piece. When two fractured faces are contiguous, the angle between the planes of fractures shall be at least 30° to count as two fractured faces.

The percentage of wear shall not be greater than 45 percent when tested in accordance with ASTM C 131. The sodium sulfate soundness loss shall not exceed 12 percent, after 5 cycles, when tested in accordance with ASTM C 88.

The fraction passing the No. 40 (0.42 mm) sieve shall have a liquid limit no greater than 25 and a plasticity index of not more than 4 when tested in accordance with ASTM D 4318. The fine aggregate shall have a minimum sand equivalent value of 35 when tested in accordance with ASTM D 2419.

a. Sampling and Testing. Aggregates for preliminary testing shall be furnished by the Contractor prior to the start of production. All tests for initial aggregate submittals necessary to determine compliance with the specification requirements will be made by the Engineer at no expense to the Contractor.

Samples of aggregates shall be furnished by the Contractor at the start of production and at intervals during production. The sampling points and intervals will be designated by the Engineer. The samples will be the basis of approval of specific lots of aggregates from the standpoint of the quality requirements of this section.

In lieu of testing, the Engineer may accept certified state test results indicating that the aggregate meets specification requirements.

Samples of aggregates to check gradation shall be taken by the Engineer at least once daily. Sampling shall be in accordance with ASTM D 75, and testing shall be in accordance with ASTM C 136 and C 117.

b. Gradation Requirements. The gradation (job mix) of the final mixture shall fall within the design range indicated in Table 1, when tested in accordance with ASTM C 117 and C 136. The final gradation shall be continuously well graded from coarse to fine and shall not vary from the low limit on one sieve to the high limit on an adjacent sieve or vice versa.

TABLE 1. REQUIREMENTS FOR GRADATION OF AGGREGATE [1]

Sieve Size	Design Range Percentage by Weight Passing Sieves	Job Mix Tolerances Percent
2 in (50.0 mm)	100	
1½ in (37.0 mm)	95–100	±5
1 in (25.0 mm)	70–95	±8
¾ in (19.0 mm)	55–85	±8
No. 4 (4.75 mm)	30–60	±8
No. 30 (0.60 mm)	12–30	±5
No. 200 (0.075 mm)	0–8	±3

[1] Where environmental conditions (temperature and availability of free moisture) indicate potential damage due to frost action, the maximum percent of material, by weight, of particles smaller than 0.02 mm shall be 3 percent. It also may be necessary to have a lower percentage of material passing the No. 200 sieve to help control the percentage of particles smaller than 0.02 mm.

The job mix tolerances in Table 1 shall be applied to the job mix gradation to establish a job control grading band. The full tolerance still will apply if application of the tolerances results in a job control grading band outside the design range.

The fraction of the final mixture that passes the No. 200 (0.075 mm) sieve shall not exceed 60 percent of the fraction passing the No. 30 (0.60 mm) sieve.

CONSTRUCTION METHODS

209-3.1 PREPARING UNDERLYING COURSE. The underlying course shall be checked and accepted by the Engineer before placing and spreading operations are started. Any ruts or soft yielding places caused by improper drainage conditions, hauling, or any other cause shall be corrected at the Contractor's expense before the base course is placed thereon. Material shall not be placed on frozen subgrade.

209-3.2 MIXING. The aggregate shall be uniformly blended during crushing operations or mixed in a plant. The plant shall blend and mix the materials to meet the specifications and to secure the proper moisture content for compaction.

209-3.3 PLACING. The crushed aggregate base material shall be placed on the moistened subgrade in layers of uniform thickness with a mechanical spreader.

The maximum depth of a compacted layer shall be 6 inches (150 mm). If the total depth of the compacted material is more than 6 inches (150 mm), it shall be constructed in two or more layers. In multi-layer construction, the base course shall be placed in approximately equal-depth layers.

The previously constructed layer should be cleaned of loose and foreign material prior to placing the next layer. The surface of the compacted material shall be kept moist until covered with the next layer.

209-3.4 COMPACTION. Immediately upon completion of the spreading operations, the crushed aggregate shall be thoroughly compacted. The number, type, and weight of rollers shall be sufficient to compact the material to the required density.

The moisture content of the material during placing operations shall not be below, nor more than 1-1/2 percentage points above, the optimum moisture content as determined by ASTM [ ].

209-3.5 ACCEPTANCE SAMPLING AND TESTING FOR DENSITY. Aggregate base course shall be accepted for density on a lot basis. A lot will consist of one day's production where it is not expected to exceed 2400 square yards (2000 square meters). A lot will consist of one-half day's production where a day's production is expected to consist of between 2400 and 4800 square yards (2000 and 4000 square meters).

Each lot shall be divided into two equal sublots. One test shall be made for each sublot. Sampling locations will be determined by the Engineer on a random basis in accordance with statistical procedures contained in ASTM D 3665.

Each lot will be accepted for density when the field density is at least 100 percent of the maximum density of laboratory specimens prepared from samples of the base course material delivered to the job site. The specimens shall be compacted and tested in accordance with ASTM [ ]. The in-place field density shall be determined in accordance with ASTM D 1556 or D 2167. If the specified density is not attained, the entire lot shall be reworked and/or recompacted and two additional random tests made. This procedure shall be followed until the specified density is reached.

* *

The Engineer shall specify ASTM D 698 for areas designated for aircraft with gross weights of 60,000 pounds (27 200 kg) or less and ASTM D 1557 for areas designated for aircraft with gross weights greater than 60,000 pounds (27 200 kg).

* *

In lieu of the core method of field density determination, acceptance testing may be accomplished using a nuclear gage in accordance with ASTM D 2922. The gage should be field calibrated in accordance with paragraph 4 of ASTM D 2922. Calibration tests shall be conducted on the first lot of material placed that meets the density requirements.

Use of ASTM D 2922 results in a wet unit weight, and when using this method, ASTM D 3017 shall be used to determine the moisture content of the material. The calibration curve furnished with the moisture gages shall be checked as described in paragraph 7 of ASTM D 3017. The calibration checks of both the density and moisture gages shall be made at the beginning of a job and at intervals as determined by the Engineer.

If a nuclear gage is used for density determination, two random readings shall be made for each sublot.

209-3.6 FINISHING. The surface of the aggregate base course shall be finished by blading or with automated equipment especially designed for this purpose.

In no case will the addition of thin layers of material be added to the top layer of base course to meet grade. If the elevation of the top layer is 1/2 inch (12 mm) or more below grade, the top layer of base shall be scarified to a depth of at least 3 inches (75 mm), new material added, and the layer shall be blended and recompacted to bring it to grade. If the finished surface is above plan grade, it shall be cut back to grade and rerolled.

209-3.7 SURFACE TOLERANCES. The finished surface shall not vary more than 3/8 inch (9 mm) when tested with a 16-foot (4.8 m) straightedge applied parallel with or at right angles to the centerline. Any deviation in excess of this amount shall be corrected by the Contractor at the Contractor's expense.

209-3.8 THICKNESS CONTROL. The completed thickness of the base course shall be within 1/2 inch (12 mm) of the design thickness. Four determinations of thickness shall be made for each lot of material placed. The lot size shall be consistent with that specified in paragraph 3.5. Each lot shall be divided into four equal sublots. One test shall be made for each sublot. Sampling locations will be determined by the Engineer on a random basis in accordance with procedures contained in ASTM D 3665. Where the thickness is deficient by more than 1/2 inch (12 mm), the Contractor shall correct such areas at no additional cost by excavating to the required depth and replacing with new material. Additional test holes may be required to identify the limits of deficient areas.

209-3.9 MAINTENANCE. The base course shall be maintained in a condition that will meet all specification requirements until the work is accepted. Equipment used in the construction of an adjoining section may be routed over completed portions of the base course, provided no damage results and provided that the equipment is routed over the full width of the base course to avoid rutting or uneven compaction.

METHOD OF MEASUREMENT

209-4.1 The quantity of crushed aggregate base course to be paid for will be determined by measurement of the number of **[square yards (square meters)][cubic yards (cubic meters)]** of material actually constructed and accepted by the Engineer as complying with the plans and specifications. **[On individual depth measurements, thicknesses more than 1/2 inch (12 mm) in excess of the design thickness shall be considered as the specified thickness, plus 1/2 inch (12 mm) in computing the number of cubic yards (cubic meters) for payment.]**

BASIS OF PAYMENT

209-5.1 Payment shall be made at the contract unit price per **[square yard (square meter)][cubic yard (cubic meter)]** for crushed aggregate base course. This price shall be full compensation for furnishing all materials, for preparing and placing these materials, and for all labor, equipment tools, and incidentals necessary to complete the item.

Payment will be made under:

Item P-209-5.1	Crushed Aggregate Base Course -- per **[square yard (square meter)][cubic yard (cubic meter)]**

TESTING REQUIREMENTS

ASTM C 29	Unit Weight of Aggregate
ASTM C 88	Soundness of Aggregates by Use of Sodium Sulfate or Magnesium Sulfate
ASTM C 117	Materials Finer than 75um (No. 200) Sieve in Mineral Aggregates by Washing
ASTM C 131	Resistance to Abrasion of Small Size Coarse Aggregate by Use of the Los Angeles Machine
ASTM C 136	Sieve or Screen Analysis of Fine and Coarse Aggregate
ASTM D 75	Sampling Aggregate
ASTM D 693	Crushed Stone, Crushed Slag, and Crushed Gravel for Dry- or Water-Bound Macadam Base Courses and Bituminous Macadam Base and Surface Courses of Pavements.
ASTM D 698	Moisture-Density Relations of Soils and Soil - Aggregate Mixtures Using 5.5-lb (2.49-kg) Rammer and 12-in (305mm) Drop
ASTM D 1556	Density of Soil in Place by the Sand - Cone Method
ASTM D 1557	Moisture-Density Relations of Soils and Soil-Aggregate Mixtures Using 10-lb (4.5kg) Rammer and 18 in (457 mm) Drop
ASTM D 2167	Density of Soil in Place by the Rubber-Ballon Method
ASTM D 2419	Sand Equivalent Value of Soils and Fine Aggregate
ASTM D 2922	Density of Soil and Soil-Aggregate in Place by Nuclear Methods
ASTM D 3017	Moisture Content of Soil and Soil-Aggregate in Place by Nuclear Methods
ASTM D 3665	Random Sampling of Paving Materials
ASTM D 4318	Liquid Limit, Plastic Limit, and Plasticity Index of Soils

ITEM P-210 CALICHE BASE COURSE

DESCRIPTION

210-1.1. This item shall consist of a base course composed of caliche, caliche-gravel, caliche and limestone, or material of similar characteristics, constructed on the prepared underlying course in accordance with these specifications and in conformity to the dimensions and typical cross section shown on the plans.

MATERIALS

210-2.1 Materials. The base course material shall consist of caliche, caliche-gravel, caliche limestone, or similar materials obtained from sources approved by the Engineer prior to use of the materials. All acceptable material shall be screened, and the oversize shall be crushed and returned to the screened material in such manner and proportions that will produce a uniform product.

The gradation of the material, as finally processed and blended, shall meet the following requirements when tested in accordance with ASTM C 136.

Sieve Designation (Square Openings)	Percentage by Weight Passing Sieves
2 inch (50.0 mm)	100
No. 40 (0.425 mm)	15-35
No. 200 (0.075 mm)	0-15

That portion of the material, including the blended filler, passing a No. 40 (0.425 mm) mesh sieve shall be known as soil binder and shall have a liquid limit of not more than 35 and a plasticity index of not more than 10 as determined as ASTM D 4318.

If necessary, the Contractor shall blend or combine materials so that the final processed material meets all of the requirements of these specifications. The Contractor shall make such modifications in materials and methods as are necessary to secure a material which is capable of being compacted into a dense and well-bonded base.

210-2.2 FILLER FOR BLENDING. If filler, in addition to that naturally present in the base course material, is necessary for satisfactory bonding of the material, for changing the soil constants of the material passing the No. 40 mesh sieve, or for correcting the gradation to the limitations of the specified gradation, it shall be uniformly blended with the base course material on the runway, at the crushing plant, or at the mixing plant. The material for such purpose shall be obtained from sources approved by the Engineer.

CONSTRUCTION METHODS

210-3.1 OPERATION IN PITS. All work involved in clearing and stripping pits, including the handling of unsuitable material, shall be performed by the Contractor at his/her own expense. The pits shall be operated in such a manner that a clean and uniform material will be secured. The base course material shall be obtained from approved sources.

210-3.2 EQUIPMENT. All equipment necessary for the proper construction of the work shall be on the project, in first-class working condition, and approved by the Engineer before construction is permitted to start.

210-3.3 PREPARING UNDERLYING COURSE. The underlying course shall be checked and accepted by the Engineer before placing and spreading operations are started. Any ruts or soft, yielding places caused by improper drainage conditions, hauling, or any other cause, shall be corrected at the Contractor's expense.

210-3.4 PLACING AND SPREADING

a. The aggregate base material that has proportioned or processed shall be placed on the prepared underlying course and compacted in layers to the thickness shown on the plans. The depositing and spreading of the material shall commence where designated and shall progress without breaks. The material shall be deposited and spread in lanes in a uniform layer and without segregation of size to such loose depth that, when compacted, the layer shall have the required thickness. The base aggregate shall be spread by spreader boxes or other approved devices that shall spread the aggregate in the required amount. The base material shall be spread and shaped the same day as placed.

b. If the travel plant method is used for mixing, the base material shall be placed on the underlying course in windrows parallel to the centerline of the runway. Sufficient quantity and proportions of materials shall be placed in the windrow to provide a base mixture conforming to the specified grading and compacted thickness. The windrow shall be shaped to a uniform section and left undisturbed until measuring and sampling are complete. After mixing and before spreading, the mixture shall be examined by the Engineer, who shall determine whether the mixing is complete and satisfactory and whether the proper moisture content is maintained for spreading. No spreading shall be done, except when authorized.

After the mixing has been completed, the base material shall be spread to the required depth and width by a self-powered blade grader, mechanical spreader, or other approved method. In spreading, care shall be taken to prevent cutting into the underlying layer. The material shall be bladed, disced, and dragged if necessary until a smooth, uniform surface is obtained true to line, grade, and cross section.

c. When the base materials are to be proportioned and mixed or blended in-place, the different layers shall be spread and placed as follows with the relative proportions of the components of the mixture designated by the Engineer.

The base aggregate shall be deposited and spread evenly to a uniform thickness and width. Then the binder or filler or other admixture shall be deposited and spread evenly over the first layer. As many layers of materials as the Engineer may direct shall be added to obtain the required base materials.

When the required materials have been placed, they shall be thoroughly mixed and blended by means of approved graders, discs, harrows, or rotary-tillers, supplemented by other suitable equipment, if necessary. The mixing shall continue until the mixture is uniform throughout. Areas of segregated material shall be corrected by the addition of binder or filler material and shall be uniformly applied, prior to and during the mixing operations if necessary, to maintain the material at the proper moisture content. When the mixing and blending have been completed, the material shall be spread in a uniform layer which, when compacted, will meet the requirements of thickness and typical cross section. Hauling over material that has not been mixed and shaped shall not be permitted, except when necessitated by the placing of successive layers of materials. Layers of base material allowed to become partially compacted shall be scarified and disced before placing binder material or before blading and shaping for rolling.

d. The base course shall be constructed in a layer not less than 3 inches (75 mm) nor more than 6 inches (150 mm) of compacted thickness. The aggregate, as spread, shall be of uniform grading with no pockets of fine or coarse materials. Unless otherwise permitted by the Engineer, the aggregate shall not be spread more than 2,000 square yards (1700 square meters) in advance of the rolling. Any necessary sprinkling shall be kept within these limits. No material shall be placed in snow or on a soft, muddy, or frozen course.

When more than one layer is required, the construction procedure described herein shall apply similarly to each layer.

During the placing and spreading, sufficient caution shall be exercised to prevent the incorporation of subgrade, subbase, or shoulder material in the base course mixture.

210-3.5 COMPACTION. Immediately after completion of the spreading operations, the mixture shall be thoroughly compacted. The number, type, and weight of rollers shall be sufficient to compact the mixture to the required density.

The field density of the compacted material shall be at least 100 percent of the maximum density of laboratory specimens prepared from samples of the material delivered to the jobsite. The laboratory specimens

shall be compacted and tested in accordance with [ ]. The in-place field density shall be determined in accordance with ASTM D 1556 or ASTM D 2167. The moisture content of the material at the start of compaction shall not be below nor more than 1-1/2 percentage points above the optimum moisture content.

* *

The Engineer shall specify ASTM D 698 for areas designated for aircraft with gross weights of 60,000 pounds (27 200 kg) or less and ASTM D 1557 for areas designated for aircraft with gross weights greater than 60,000 pounds (27 200 kg).

* *

The course shall not be rolled when the underlying course is soft or yielding or when the rolling causes undulation in the base course. When the rolling develops irregularities that exceed 3/8 inch (9 mm) when tested with a 16-foot (4.8 m) straightedge, the irregular surface shall be loosened, then refilled with the same kind of material as that used in constructing the course, and again rolled as required above.

210-3.6 FINISHING. The surface of the base course shall be finished by blading or with automated equipment especially designed for this purpose.

In no case will the addition of thin layers of material be added to the top layer of base course to meet grade. If the elevation of the top layer is 1/2 inch (12 mm) or more below grade, the top layer of base shall be scarified to a depth of at least 3 inches (75 mm), new material added, and the layer shall be blended and recompacted to bring it to grade. If the finished surface is above plan grade, it shall be cut back to grade and rerolled.

210-3.7 SURFACE TOLERANCE. After the course has been completely compacted, the surface shall be tested for smoothness and accuracy of grade and crown. Any portion lacking the required smoothness or failing in accuracy of grade or crown shall be scarified, reshaped, recompacted, and otherwise manipulated as the Engineer may direct until the required smoothness and accuracy are obtained. The finished surface shall not vary more than 3/8 inch (9 mm) from a 16-foot (4.8 m) straightedge when applied to the surface parallel with, and at right angles to, the centerline.

210-3.8 THICKNESS CONTROL. The thickness of the base course shall be determined by depth tests or cores taken at intervals in such manner that each test shall represent no more than 300 square yards (250 square meters). Where the thickness is deficient by more than 1/2 inch (12 mm), the Contractor shall correct such areas at no additional cost by excavating to the required depth and replacing with new material. Additional test holes may be required to identify the limits of deficient areas. The Contractor shall replace, at his/her expense, the base material where borings have been taken for test purposes.

210-3.9 PROTECTION. Work on the base course shall not be accomplished during freezing temperatures nor when the subgrade is wet. When the aggregates contain frozen materials or when the underlying course is frozen, the construction shall be stopped.

Hauling equipment may be routed over completed portions of the base course, provided no damage results and provided that such equipment is routed over the full width of the base course to avoid rutting or uneven compaction. However, the Engineer in charge shall have full and specific authority to stop all hauling over completed or partially completed base course when, in his/her opinion, such hauling is causing damage. Any damage resulting to the base course from routing equipment over the base course shall be repaired by the Contractor at his/her own expense.

210-3.10 MAINTENANCE. Following the completion of the base course, the Contractor shall perform all maintenance work necessary to keep the base course in a condition satisfactory for priming. After priming, the surface shall be kept clean and free from foreign material. The base course shall be properly drained at all times. If cleaning is necessary, or if the prime coat becomes disturbed, any work or restitution necessary shall be performed at the expense of the Contractor.

METHOD OF MEASUREMENT

210-4.1 The quantity of caliche base course to be paid for shall be the number of cubic yards (cubic meters) of base course material placed, bonded, and accepted in the completed base course. The quantity of base course material shall be measured in final position, based upon depth tests or cores taken as directed by the Engineer, at the rate of 1 depth test for each 300 square yards (250 square meters) of base course, or by means of average end areas on the complete work computed from elevations to the nearest 0.01 foot (3 mm). On individual depth measurements, thickness more than 1/2 inch (12 mm) in excess of that shown on the plans shall be considered as specified thickness, plus 1/2 inch (12 mm) in computing the yardage for payment. Base material shall not be included in any other excavation quantities.

BASIS OF PAYMENT

210-5.1 Payment shall be made at the contract unit price per cubic yard (cubic meter) for caliche base course. This price shall be full compensation for furnishing all materials and for all preparation, hauling, and placing of these materials, and for all labor, equipment, tools, and incidentals necessary to complete the item.

Payment will be made under:

Item P-210-5.1	Caliche Base Course--per cubic yard (cubic meter)

TESTING REQUIREMENTS

ASTM C 136	Sieve or Screen Analysis of Fine and Coarse Aggregate
ASTM D 698	Moisture-Density Relations of Soils and Soil-Aggregate Mixtures Using 5.5 lb (2.49 kg) Rammer and 12-in. (305 mm) Drop
ASTM D 1557	Density of Soil in Place by the Sand-Cone Method
ASTM D 2167	Density of Soil in Place by the Rubber-Ballon Method
ASTM D 4318	Liquid Limit, Plastic Limit, and Plasticity Index of Soils

ITEM P-211 LIME ROCK BASE COURSE

DESCRIPTION

211-1.1 This item shall consist of a base course composed of lime rock constructed on the prepared underlying course in accordance with these specifications and shall conform to the dimensions and typical cross section shown on the plans.

MATERIALS

211-2.1 MATERIALS. The lime rock base course material shall consist of fossiliferous limestone of uniform quality, and shall not contain hard or flinty pieces which will cause a rough surface containing pits and pockets. The rock shall show no tendency to "air slack" or undergo chemical change when exposed to the weather. The material when watered and rolled shall be capable of being compacted into a dense and well-bonded base.

The oölitic type of lime rock shall meet the following requirements:

Carbonates of calcium and magnesium - not less than 70%.
Oxides of iron and aluminum - nor more than 2%.
The combined amount of carbonates, oxides, and silica shall be at least 97%. The material shall be non-plastic.

All other types of lime rock shall contain not less than 95% of carbonates of calcium and magnesium. Liquid limit shall not exceed 35, plasticity index shall not exceed 6, as determined in accordance with ASTM D 4318.

The chemical analysis of lime rock shall consist of determining the silica insoluble, iron oxide, and alumina by solution of the sample in hydrochloric (HCl) acid, evaporating, dehydrating, redissolving the residue, and neutralizing with ammonium hydroxide, filtering, washing, and igniting the residue lime rock. The difference between this insoluble matter and 100% is reported as carbonates of calcium and magnesium.

The lime rock shall not contain more than 0.5% of roots, leaf mold, organic, or foreign matter and shall be obtained from pits from which all overburden has been removed previous to blasting and quarrying.

The gradation of the lime rock shall meet the following requirements:

Sieve designation (square openings)	Percentage by Weight Passing Sieves
3½ inch (90.mm)	100
¾ inch (19.0 mm)	50-100

All fine material shall consist entirely of dust of fracture.

CONSTRUCTION METHODS

211-3.1 SOURCES OF SUPPLY. All work involved in cleaning and stripping pits, including the handling of unsuitable material shall be performed by the Contractor at his/her own expense. The lime rock shall be obtained from approved sources. The pits shall be operated in such a manner that a clean and uniform material will be secured.

211-3.2 EQUIPMENT. All equipment necessary for the proper construction of this work shall be on the project, in first-class working condition, and approved by the Engineer before construction is permitted to start.

211-3.3 PREPARING UNDERLYING COURSE. The underlying course shall be checked and accepted by the Engineer before placing and spreading operations are started. Any ruts or soft yielding places caused by improper drainage conditions, hauling, or any other cause shall be corrected at the Contractor's expense before the base course is placed thereon. Material shall not be placed on frozen subgrade.

211-3.4 PLACING AND SPREADING. All base course material shall be placed on the prepared underlying course and compacted in layers to the thickness shown on the plans. The depositing and spreading of the material on the prepared course or on a completed layer shall commence where designated and shall progress without breaks. The material shall be deposited and spread in lanes in a uniform layer and without segregation of size to such loose depth that, when compacted, the layer shall have the required thickness. When more than one layer is required, the construction procedure described herein shall apply similarly to each layer, excepting the scarifying and rerolling of the surface which shall apply to only the top layer.

The rock shall be transported to locations where it is to be used over rock previously placed and dumped at the end of the preceding spread. It shall then be spread uniformly with shovels, forks, or approved mechanical spreaders especially constructed for this purpose. In no case shall rock be dumped directly onto the underlying course. Transporting over the underlying course will not be permitted, except as directed, in which case it must be protected by planking if rutting occurs. During the dumping and spreading operations, the rock shall be brought to the proper moisture content to obtain maximum density. If water is added, it shall be uniformly mixed to the full depth of the course by discing. All segregated areas of fine or coarse rock shall be removed and replaced with well-graded rock, and approved by the Engineer. Lime rock shall not be spread when the subgrade is in an unsuitable condition.

The lime rock base course shall be constructed in a layer not less than 4 inches (100 mm) nor more than 6 inches (150 mm) of compacted thickness. The base course shall be constructed in lanes or strips parallel with the centerline of the paved area.

During the placing operation, sufficient caution shall be exercised to prevent the incorporation of subgrade, subbase, or shoulder material in the lime rock.

211-3.5 ROLLING. Immediately after completion of the spreading operations, the base material shall be thoroughly compacted. The number, type, and weight of rollers shall be sufficient to compact the mixture to the required density.

The field density of the compacted material shall be at least 100 percent of the maximum density of laboratory specimens prepared from samples of the base material delivered to the jobsite. The laboratory specimens shall be compacted and tested in accordance with [ ]. The in-place field density shall be determined in accordance with ASTM D 1556 or ASTM D 2167. The moisture content of the material at the start of compaction shall not be below nor more than 1-1/2 percentage points above the optimum moisture content.

* *

The Engineer shall specify ASTM D 698 for areas designated for aircraft with gross weights of 60,000 pounds (27 200 kg) or less and ASTM D 1557 for areas designated for aircraft with gross weights greater than 60,000 pounds (27 200 kg).

* *

211-3.6 FINISHING BASE COURSE. After the watering and rolling of the base course, the entire surface shall be scarified to a depth of at least 3 inches (75 mm) and shaped to the exact crown and cross section with a blade grader. The scarified material shall be rewatered and thoroughly rolled. Rolling shall continue until the base is bonded and compacted into a dense, unyielding mass, true to grade and cross section. The scarifying and rolling of the surface of the base shall follow the initial rolling of the lime rock by not more than 4 days. When the lime rock base is constructed in two layers, the scarifying of the surface shall be to a depth of 2 inches (50 mm).

If, in the opinion of the Engineer, the surface of the base is glazed or cemented to the extent that the prime coat could not penetrate properly, and after determining that the condition of the base meets all requirements, he will direct that the surface of the base be hard-planed with a blade grader and broomed immediately prior to the application of the prime coat. This hard-planing shall be done in such a manner that only

the glazed or cemented surface is removed, leaving a granular or porous condition that will allow free penetration of the prime material. The material planed from the base shall be removed from the base area.

If at any time the underlying material becomes churned up and mixed with the base course material, the Contractor shall, without additional compensation, dig out and remove the mixture, reshape and compact the underlying course, replace the materials removed with clean rock which shall be watered and rolled until satisfactorily compacted.

Where cracks, checks, or failures appear in the base, either before or after priming and before the surface course is laid, the Contractor shall remove such cracks, checks, or failures by rescarifying, reshaping, watering, rolling, and adding lime rock where necessary.

211-3.7 SURFACE TOLERANCE. After the course has been completely compacted, the surface shall be tested for smoothness and accuracy of grade and crown. any portion lacking the required smoothness or failing in accuracy of grade or crown shall be scarified, reshaped, recompacted, and otherwise manipulated as the Engineer may direct until the required smoothness and accuracy are obtained. The finished surface shall not vary more than 3/8 inch (9 mm) from a 16-foot (4.8 mm) straightedge when applied to the surface parallel with, and at right angles to, the centerline. In testing surface of the harder lime rocks, measurement of clearances from the straightedge shall not include small holes caused by individual pieces being pulled out by the grader.

211-3.8 THICKNESS. The thickness of the base course shall be determined by depth tests or elevations taken at intervals in such a manner that each test shall represent 300 square yards (28 square meters), or it shall be as otherwise directed by the Engineer. The depth tests shall be made by test holes through the base at least 3 inches (75 mm) in diameter. Where the base deficiency is more than 1/2 inch (12 mm), the Contractor shall correct such areas by scarifying and adding rock. The base shall be scarified, rock added, and tapered a distance of 100 feet (30 m) in each direction from the edge of the deficient area for each inch of rock added. The affected area shall then be watered, bladed, rolled, and brought to a satisfactory state of compaction, required thickness, and cross section. The thickness of the base in the affected area shall be remeasured by depth tests or elevations. The operations of scarifying, adding rock, and rerolling shall continue until the base thickness is within the 1/2-inch (12 mm) tolerance of base thickness. The final base thickness of the reconditioned area shall be used to determine the average job thickness.

The average job thickness shall be the average of the depth measurement as above outlined and shall be within 1/4 inch (6 mm) of the thickness shown on the typical cross section. On individual depth measurements, thicknesses more than 1/2 inch (12 mm) in excess of that shown on the plans shall be considered as specified thickness plus 1/2 inch (12 mm) in computing the average job thickness. The Contractor shall replace, at his/her expense, the lime rock removed from test holes.

211-3.9 PROTECTION. Work on the base course shall not be accomplished during freezing temperatures nor when the subgrade is wet. When the aggregate contains frozen materials or the underlying course is frozen, the construction shall be stopped.

Hauling equipment may be routed over completed portions of the base course, provided no damage results and provided that such equipment is routed over the full width of the base course to avoid rutting or uneven compaction. however, the Engineer in charge shall have full and specific authority to stop all hauling over completed or partially completed base course when, in his/her opinion, such hauling is causing damage. Any damage resulting to the base course from routing equipment over the base course shall be repaired by the Contractor at his/her own expense.

211-3.10 MAINTENANCE. Following the completion of the base course, the Contractor shall perform all maintenance work necessary to keep the base course in a condition satisfactory for priming. After priming, the surface shall be kept clean and free from foreign material. The base course shall be properly drained at all times. If cleaning is necessary, or if the prime coat becomes disturbed, any work or restitution necessary shall be performed at the expense of the Contractor.

METHOD OF MEASUREMENT

211-4.1 The quantity of lime rock base course to be paid for shall be the number of cubic yards (cubic meters) of base material placed, bonded, and accepted in the completed base course. The quantity of base course material shall be measured in final position, based upon depth tests taken as directed by the Engineer, at the rate of 1 depth test for each 300 square yards (28 square meters) of base course, or by means of average end areas on the complete work computed from elevations to the nearest 0.01 foot (3 mm). On individual depth measurements, thicknesses more than 1/2 inch (12 mm) in excess of that shown on the plans shall be considered as the specified thickness plus 1/2 inch (12 mm) in computing the yardage for payment.

BASIS OF PAYMENT

211-5.1 Payment shall be made at the contract unit price per cubic yard (cubic meter) for lime rock base course. This price shall be full compensation for furnishing all materials and for all preparation, hauling, and placing of these materials, and for all labor, equipment, tools, and incidentals necessary to complete the item.

The cost of removing cracks and checks including the labor and material for repriming, and the additional lime rock necessary for crack elimination, will not be paid for separately but shall be included in the contract price per cubic yard (cubic meter) for lime rock base course.

Payment will be made under:

Item P-211-5.1	Lime rock base course per cubic yard (cubic meter)

TESTING REQUIREMENTS

ASTM C 136	Sieve or Screen Analysis of Fine and Course Aggregate
ASTM D 698	Moisture-Density Relations of Soils and Soil Aggregate Mixtures Using 5.5-lb (2.49-kg) Rammer and 12-in (305 mm) Drop
ASTM D 1556	Density of Soil in Place by the Sand-Cone Method
ASTM D 1557	Moisture-Density Relations of Soils and Soil-Aggregate Mixtures Using 10-lb (4.5 kg) Rammer and 18-in (145 mm) Drop
ASTM D 2167	Density of Soil in Place by the Rubber-Ballon Method
ASTM 4318	Liquid Limit, Plastic Limit, and Plasticity Index of Soils

ITEM P-212 SHELL BASE COURSE

DESCRIPTION

212-1.1 This item shall consist of a base course composed of shell and binder constructed on a prepared underlying course in accordance with these specifications and shall conform to the dimensions and typical cross section shown on the plans.

MATERIALS

212-2.1 MATERIALS. The shell shall consist of durable particles of "dead" oyster or clam shell. The base material shall consist of oyster shell, together with an approved binding or filler material, blended or processed to produce a uniform mixture complying with the specifications for gradation, soil constants, and compaction capability. Clam shell may be used only in combination with oyster shell in the proportion up to and including 50%.

The shell shall be reasonably clean and free from excess amounts of clay or organic matter such as leaves, grass, roots, and other objectionable and foreign material.

The gradation of the blended or processed material shall meet the requirements of the gradation given in the following table, when tested in accordance with ASTM C 136.

Sieve Designation (square openings)	Percentage by Weight Passing Sieves
3 inch (75.0 mm)	100
¾ inch (19.0 mm)	60–90
No. 4 (4.75 mm)	15–55
No. 200 (0.075 mm)	0–15

That portion of the material, including the blended filler, passing a No. 40 (0.42 mm) mesh sieve shall be known as soil binder and shall have a liquid limit of not more than 25 and a plasticity index of not more than 8 as determined by ASTM D 4318.

If necessary, the Contractor shall blend or combine materials so that the final processed material meets all the specifications. The Contractor shall make such modifications in materials and methods as are necessary to secure a material which is capable of being compacted into a dense and well-bonded base without an excess of soil binder.

212-2.2 FILLER FOR BLENDING. If filler, in addition to that naturally present in the base course material, is necessary for satisfactory bonding of the material, or for changing the soil constants of the material passing the No. 40 (0.42 mm) mesh sieve, or for correcting the gradation to the limitations of the specified gradation, it shall be uniformly blended with the base course material on the pavement or at the plant. The material for such purpose shall be obtained from sources approved by the Engineer and shall be of a gradation necessary to accomplish the specified gradation in the final processed material.

CONSTRUCTION METHODS

212-3.1 SOURCES OF SUPPLY. The Contractor shall notify the Engineer, sufficiently in advance, of the intended source of supply of shell. the shell shall be obtained from approved sources. The material in the stockpile shall be handled in a manner that will secure a uniform and satisfactory product.

212-3.2 EQUIPMENT. All equipment necessary for the proper construction of this work shall be on the project, in first-class working condition, and approved by the Engineer before construction is permitted to start.

The processing plant shall be designed, constructed, operated, and capable of thoroughly mixing the shell, binder, and water in the directed proportions to produce base material of the gradation and consistency required.

212-3.3 PREPARING UNDERLYING COURSE. The underlying course shall be checked and accepted by the Engineer before placing and spreading operations are started. Any ruts or soft yielding places caused by improper drainage conditions, hauling, or any other cause shall be corrected at the Contractor's expense before the base course is placed thereon. Material shall not be placed on frozen subgrade or subbase.

212-3.4 PLANT MIXING. The base material shall be uniformly blended and mixed in an approved central or travel mixing plant. The shell, together with any blended material, shall be thoroughly mixed with the required amount of water. After the mixing is complete, the material shall be transported to, or spread on, the underlying course without undue loss of the moisture content.

212-3.5 PLACING AND SPREADING. The base course material that is correctly proportioned or that has been processed in a central plant shall be placed on the prepared underlying course and compacted in the thickness shown on the plans. The depositing and spreading of the material shall commence where designated and shall progress without breaks. The materials shall be deposited and spread in lanes in a uniform layer and without segregation of size to such loose depth that, when compacted, the layer shall have the required thickness. The material shall be spread by spreader boxes or other approved devices that shall distribute the material in a uniform layer. Dumping from vehicles in piles requiring rehandling will not be permitted. hauling over the uncompacted base course shall not be permitted.

212-3.6 TRAVEL PLANT MIX. When the use of a travel plant is approved, sufficient quantities and proportions of all material necessary shall be used to provide a base mixture that conforms to the specified gradation, quality, and thickness. If a windrow travel plant is employed for mixing, the aggregate shall be placed in windrows parallel to the pavement centerline. If a traveling plant is used which mixes previously spread aggregates in-place, the material shall be spread to a thickness that may be readily handled by the machine and that will develop the proper thickness for each layer. The base material shall be of satisfactory moisture content to obtain maximum density.

After the mixing has been completed, the base material shall be spread to the required depth and width by a self-powered blade grader, mechanical spreader, or other approved method. In spreading, care shall be taken to prevent cutting into the underlying layer. The material shall be bladed, disced, and dragged if necessary until a smooth, uniform surface is obtained true to line, grade, and cross section and in condition for compacting.

212-3.7 MIXED IN-PLACE. When specified or permitted, the base materials may be proportioned and mixed or blended in-place on the underlying course. the different layers shall be spread and placed in the following manner with the relative proportions of the components of the mixture designated by the Engineer.

The base aggregate shall be deposited and spread evenly on the subgrade to a uniform thickness and width. Then the binder or filler shall be deposited and spread evenly over the first layer. There shall be as many layers of materials added as the Engineer may direct to obtain the required base mixture.

After the required materials have been placed, they shall be thoroughly mixed and blended using approved graders, discs, harrows, or rotary-tillers, supplemented by other suitable equipment if necessary. The mixing shall continue until the mixture is uniform throughout. Areas of segregated material shall be corrected by the addition of binder or filler material and then thoroughly remixed. If necessary, water in the required amount shall be uniformly applied as directed by the Engineer prior to and during the mixing operations to maintain the material at the proper moisture content. When the mixing and blending has been completed, the material shall be spread in a uniform layer which, when compacted, will meet the requirements for thickness and typical cross section.

212-3.8 GENERAL METHODS FOR PLACING. The base course shall be constructed in layers not less than 4 inches (100 mm) nor more than 6 inches (150 mm) of compacted thickness. The aggregate, as spread, shall be of uniform gradation with no pockets of fine or coarse materials. Unless otherwise permitted by the Engineer, the aggregate shall not be spread more than 2,000 square yards (186 square meters) in advance of the rolling. Any necessary sprinkling shall be kept within this limit. No material shall be placed in snow or on a soft, muddy, or frozen course.

When more than one layer is required, the construction procedure described herein shall apply similarly to each layer.

The Engineer shall conduct tests to determine the maximum density and the proper moisture content of the base material, and this information will be available to the Contractor. The base material shall be brought to a satisfactory moisture content when rolling is started and any minor variations prior to or during rolling shall be corrected by sprinkling or aeration.

During placing and spreading operations, sufficient caution shall be exercised to prevent the incorporation of subgrade, subbase, or shoulder material into the base course mixture.

212-3.9 COMPACTION. Immediately after completion of the spreading operations, the base course shall be thoroughly compacted. The number, type, and weight of rollers shall be sufficient to compact the mixture to the required density.

The field density of the compacted material shall be at least 100 percent of the maximum density of laboratory specimens prepared from samples of the base material delivered to the jobsite. The laboratory specimens shall be compacted and tested in accordance with [ ]. The in-place field density shall be determined in accordance with ASTM D 1556 or ASTM D 2167. The moisture content of the material at the start of compaction shall not be below nor more than 1-1/2 percentage points above the optimum moisture content.

* *

The Engineer shall specify ASTM D 698 for areas designated for aircraft with gross weights of 60,000 pounds (27 200 kg) or less and ASTM D 1557 for areas designated for aircraft with gross weights greater than 60,000 pounds (27 200 kg).

* *

212-3.10 SURFACE TOLERANCE. After the course has been completely compacted, the surface shall be tested for smoothness and accuracy of grade and crown. Any portion lacking the required smoothness of failing in accuracy of grade or crown shall be scarified, reshaped, recompacted, and otherwise manipulated as the Engineer may direct until the required smoothness and accuracy are obtained. The finished surface shall not vary more than 3/8 inch (9 mm) from a 16-foot (4.8 m) straightedge when applied to the surface parallel with, and at right angles to, the centerline.

212-3.11 THICKNESS. The thickness of the base course shall be determined by depth tests or cores taken at intervals in such manner that each test shall represent no more than 300 square yards (28 square meters). When the base deficiency is more than 1/2 inch (12 mm), the Contractor shall correct such areas by scarifying, and replacing with satisfactory materials, and then rolling, bonding, and refinishing in accordance with these specifications. The Contractor shall replace, at his/her expense, the base material where borings have been taken for test purposes.

212-3.12 PROTECTION. Work on the base course shall not be accomplished during freezing temperatures nor when the subgrade is wet. When the aggregates contain frozen materials or when the underlying course is frozen, the construction shall be stopped.

Hauling equipment may be routed over completed portions of the base course, provided no damage results and provided that such equipment is routed over the full width of the base course, to avoid rutting or uneven compaction. However, the Engineer in charge shall have full and specific authority to stop all hauling over completed or partially completed base course when, in his/her opinion, such hauling is causing damage. Any damage resulting to the base course from routing equipment over the base course shall be repaired by the Contractor at his/her own expense.

212-3.13 MAINTENANCE. Following the completion of the base course, the Contractor shall perform all maintenance work necessary to keep the base course in a condition satisfactory for priming. After priming, the surface shall be kept clean and free from foreign material. The base course shall be properly drained at all times. If cleaning is necessary or if the prime coat becomes disturbed, any work or restitution necessary shall be performed at the expense of the Contractor.

METHOD OF MEASUREMENT

212-4.1 The quantity of shell base course to be paid for shall be the number of cubic yards (cubic meters) of base course material placed, bonded, and accepted in the completed base course. The quantity of base course material shall be measured in final position based upon depth tests or cores taken as directed by the Engineer, at the rate of 1 depth test for each 300 square yards (28 square meters) of base course, or by means of average end areas on the complete work computed from elevations to the nearest 0.01 foot (3 mm). On individual depth measurements, thicknesses more than 1/2 inch (12 mm) in excess of that shown on the plans shall be considered as specified thickness, plus 1/2 inch (12 mm) in computing the yardage for payment. Base materials shall not be included in any other excavation quantities.

BASIS OF PAYMENT

212-5.1 Payment shall be made at the contract unit price per cubic yard (cubic meter) for shell base course. This price shall be full compensation for furnishing all materials and for all preparation, hauling, and placing of these materials, and for all labor, equipment, tools, and incidentals necessary to complete the item.

Payment will be made under:

Item P-212-5.1	Shell Base Course—per cubic yard (cubic meter)

TESTING REQUIREMENTS

ASTM C 136	Sieve or Screen Analysis of Fine and Course Aggregate
ASTM D 698	Moisture-Content Relations of Soils and Soil Aggregate Mixtures Using 5.5-lb (2.49-kg) Rammer and 12-in (305 mm) Drop
ASTM D 1556	Density of Soil in Place by the Sand-Cone Method
ASTM D 1557	Moisture-Density Relations of Soils and Soil-Aggregate Mixtures Using 10-lb (4.5 kg) Rammer and 18-in (145 mm) Drop
ASTM D 2167	Density of Soil in Place by the Rubber-Ballon Method
ASTM D 4318	Liquid Limit, Plastic Limit, and Platicity Index of Soils

ITEM P-213 SAND-CLAY BASE COURSE

DESCRIPTION

213-1.1 This item shall consist of a base course composed of approved selected material, constructed on a prepared underlying course in accordance with these specifications and shall conform to the dimensions and typical cross section shown on the plans.

MATERIALS

213-2.1 SAND-CLAY. The materials shall be a mixture of clay and mineral aggregate. This mixture shall consist of topsoil, sand-clay, sand-clay gravel, disintegrated granite, or other approved selected aggregate, and it shall contain sufficient binder material so blended or processed as to produce a uniform mixture complying with the requirements of these specifications.

The materials shall be uniform and free from excess amounts of clay or organic matter such as leaves, grass, roots, and other objectionable or foreign substances. The coarse aggregate (particles coarser than a No. 4 mesh (4.75 mm) sieve) shall consist of hard, durable pieces or fragments of stone or gravel.

The gradation of the blended or processed material shall meet the requirements of one of the gradations given in the following table, when tested in accordance with ASTM C 136.

Sieve designation (square openings)	Percentage by Weight Passing Sieves A	B
1½ inch (38.5 mm)	100	100
1 inch (25.0 mm)	85-100	85-100
No. 4 (4.75 mm)	45-75	65-100
No. 10 (2.0 mm)	30-60	60-100
No. 40 (0.42 mm)	10-40	20-70
No. 200 (0.075 mm)	2-15	4-25

The fraction passing the No. 40 (0.42 mm) mesh sieve shall be referred to as binder. The fraction passing the No. 200 (0.075 mm) mesh sieve shall be less than one-half the fraction passing the No. 40 (0.42 mm) mesh sieve. The material passing the No. 40 mesh sieve shall have a plasticity index not to exceed 6 and have a liquid limit of not more than 25, when tested in accordance with ASTM D 4318, for gradation A; plasticity index shall not exceed 4 and the liquid limit shall not exceed 25 for gradation B.

213-2.2 FILLER FOR BLENDING. If filler, in addition to that naturally present in the base course material, is necessary for satisfactory bonding of the material, or for changing the soil constants of the material passing the No. 40 (0.42 mm) mesh sieve, or for correcting the gradation to the limitations of the specified gradation, it shall be uniformly blended with the base course material. The material for such purpose shall be obtained from sources approved by the Engineer and, when used, shall be of a gradation necessary to accomplish the specified gradation in the finally processed material.

CONSTRUCTION METHODS

213-3.1 OPERATION IN PITS. All work involved in clearing and stripping pits, including the handling of unsuitable material shall be performed by the Contractor at his/her expense. The base material shall be obtained from approved pits or other approved sources. The material in the pits shall be excavated and handled in a manner that assures a uniform and satisfactory product.

213-3.2 EQUIPMENT. All equipment necessary for the proper construction of this work shall be on the project, in first-class working condition, and approved by the Engineer before construction is permitted to start.

The processing equipment shall be designed, constructed, operated, and capable of thoroughly mixing all materials and water in the directed proportions to produce a base course of the gradation and consistency required.

213-3.3 PREPARING UNDERLYING COURSE. The underlying course shall be checked and accepted by the Engineer before placing and spreading operations are started. Any ruts or soft yielding places caused by improper drainage conditions, hauling, or any other cause shall be corrected at the Contractor's expense before the base course is placed thereon. Material shall not be placed on frozen subgrade or subbase.

213-3.4 PLANT MIXING. The base material shall be uniformly blended and mixed in an approved central or travel mixing plant. The sand-clay, together with any blended material, shall be thoroughly mixed with the required amount of water. After the mixing is complete, the base material shall be transported to, and spread on, the underlying course without undue loss of the moisture content.

213-3.5 PLACING AND SPREADING. The base course material that is correctly proportioned or that has been processed in a plant shall be placed on the prepared underlying course and compacted in the thickness shown on the plans. The depositing and spreading of the material shall commence where designated and shall progress without breaks. The material shall be deposited and spread in lanes in a uniform layer and without segregation of size to such loose depth that, when compacted, the layer shall have the required thickness. The material shall be spread by spreader boxes, or other approved devices, equipped to distribute the material in a uniform layer.

When approved, the material may be dumped in piles, but it shall be spread immediately. Hauling over the uncompacted base course shall not be permitted.

213-3.6 TRAVEL PLANT MIX. When the use of a travel plant is approved, sufficient quantities and proportions of all material necessary shall be used to provide a base mixture that conforms to the specified gradation, quality, and thickness. If a windrow travel plant is employed for mixing, the sand-clay shall be placed in windrows parallel to the pavement centerline. If a traveling plant is used which mixes previously spread material in-place, the sand-clay shall be spread to a thickness that may be readily handled by the machine and that will develop the proper thickness for each layer. The base material shall be of a satisfactory moisture content to obtain maximum density.

After mixing has been completed, the base material shall be spread to the required depth and width by a self-powered blade grader, mechanical spreader, or other approved method. In spreading, care shall be taken to prevent cutting into the underlying layer. The material shall be bladed, disced, and dragged if necessary until a smooth, uniform surface is obtained true to line, grade, and cross section and in condition for compacting.

213-3.7 MIXED IN-PLACE. When the base materials are to be proportioned and mixed or blended in-place, the different layers shall be spread and placed in the following manner with the relative proportions of the components of the mixture designated by the Engineer.

The base aggregate shall be deposited and spread evenly on the subgrade to a uniform thickness and width. Then the binder or filler shall be deposited and spread evenly over the first layer. There shall be as many layers of materials added as the Engineer may direct to obtain the required base mixture.

After the required materials have been placed, they shall be thoroughly mixed and blended using approved graders, discs, harrows, rotary-tillers, supplemented by other suitable equipment if necessary. The mixing shall continue until the mixture is uniform throughout. Areas of segregated material shall be corrected by the addition of binder or filler material and then thoroughly remixed. If necessary, water in the required amount shall be uniformly applied as directed by the Engineer prior to and during the mixing operation to maintain the material at the proper moisture content. When the mixing and blending has been completed, the material shall be spread in a uniform layer which, when compacted, will meet the requirements for thickness and typical cross section.

213-3.8 GENERAL METHODS FOR PLACING. The base course shall be constructed in layers not less than 4 inches (100 mm) nor more than 6 inches (150 mm) of compacted thickness. Each layer shall be measured for depth. The material, as spread, shall be of uniform gradation with no pockets of fine or coarse materials. Unless otherwise permitted by the Engineer, the base shall not be spread more than 2,000 square yards (186 square meters) in advance of the rolling. Any necessary sprinkling shall be kept within this limit. No material shall be placed in snow or on a soft, muddy, or frozen course.

When more than one layer is required, the construction procedure described herein shall apply similarly to each layer.

During placing and spreading operations, sufficient caution shall be exercised to prevent the incorporation of subgrade, subbase, or shoulder material into the base course mixture.

213-3.9 COMPACTION. Immediately after completion of the spreading operations, the base material shall be thoroughly compacted. The number, type, and weight of rollers shall be sufficient to compact the mixture to the required density.

The field density of the compacted material shall be at least 100 percent of the maximum density of laboratory specimens prepared from samples of the base material delivered to the jobsite. The laboratory specimens shall be compacted and tested in accordance with [ ]. The in-place field density shall be determined in accordance with ASTM D 1556 or ASTM D 2167. The moisture content of the material at the start of compaction shall not be below nor more than 1-1/2 percentage points above the optimum moisture content.

* *

The Engineer shall specify ASTM D 698 for areas designated for aircraft with gross weights of 60,000 pounds (27 200 kg) or less and ASTM D 1557 for areas designated for aircraft with gross weights greater than 60,000 pounds (27 200 kg).

* *

213-3.10 SURFACE TOLERANCE. After the course has been completely compacted, the surface shall be tested for smoothness and accuracy of grade and crown. Any portion lacking the required smoothness or failing in accuracy of grade or crown shall be scarified, reshaped, recompacted, and otherwise manipulated as the Engineer may direct until the required smoothness and accuracy are obtained. The finished surface shall not vary more than 3/8 inch (9 mm) from a 16-foot (4.8 mm) straightedge when applied to the surface parallel with, and at right angles to, the centerline.

213-3.11 THICKNESS. The thickness of the base course shall be determined by depth tests or cores taken at intervals in such manner that each test shall represent no more than 300 square yards (28 square meters). When the base deficiency is more than 1/2 inch (12 mm), the Contractor shall correct such areas by scarifying, adding satisfactory base mixture, rolling, sprinkling, reshaping, and refinishing in accordance with these specifications. The Contractor shall replace, at his/her expense, the base material where borings have been taken for test purposes.

213-3.12 PROTECTION. Work on the base course shall not be accomplished during freezing temperature nor when the subgrade is wet. When the base material contains frozen material or when the underlying course is frozen, the construction shall be stopped.

Hauling equipment may be routed over completed portions of the base course, provided no damage results and provided that such equipment is routed over the full width of the base course to avoid rutting or uneven compaction. However, the Engineer in charge shall have fall and specific authority to stop all hauling over completed or partially completed base course when, in his/her opinion, such hauling is causing damage. Any damage resulting to the base course from routing equipment over the base course shall be repaired by the Contractor at his/her own expense.

213-3.13 MAINTENANCE. Following the completion of the base course, the Contractor shall perform all maintenance work necessary to keep the base course in a condition satisfactory for priming. After priming, the surface shall be kept clean and free from foreign material. The base course shall be properly drained

at all times. If cleaning is necessary, or if the prime coat becomes disturbed, any work or restitution necessary shall be performed at the expense of the Contractor.

METHOD OF MEASUREMENT

213-4.1 The quantity of sand-clay base course to be paid for shall be the number of cubic yards (cubic meters) of base course material placed, bonded, and accepted in the completed base course. The quantity of base course material shall be measured in final position based upon depth tests or cores taken as directed by the Engineer, at the rate of 1 depth test for each 300 square yards (28 square meters) of base course, or by means of average end areas on the complete work computed from elevations to the nearest 0.01 foot (3 mm). On individual depth measurements, thicknesses more than 1/2 inch (12 mm) in excess of that shown on the plans shall be considered as the specified thickness, plus 1/2 inch (12 mm) in computing the yardage for payment. Base materials shall not be included in any other excavation quantities.

BASIS OF PAYMENT

213-5.1 Payment shall be made at the contract unit price per cubic yard (cubic meter) for sand-clay base course. This price shall be full compensation for furnishing all materials and for all preparation, hauling, and placing of these materials, and for all labor, equipment, tools, and incidentals necessary to complete the item.

Payment will be made under:

Item P-213-5.1	Sand-Clay Base Course—per cubic yard (cubic meter)

TESTING REQUIREMENTS

ASTM C 136	Sieve or Screen Analysis of Fine and Course Aggregate
ASTM D 698	Moisture-Density Relations of Soils and Soil Aggregate Mixtures Using 5.5-lb (2.49-kg) Rammer and 12-in (305 mm) Drop
ASTM D 1556	Density of Soil in Place by the Sand-Cone Method
ASTM D 1557	Moisture-Density Relations of Soils and Soil-Aggregate Mixtures Using 10-lb (4.5 kg) Rammer and 18-in (145 mm) Drop
ASTM D 2167	Density of Soil in Place by the Rubber-Ballon Method
ASTM D 4318	Liquid Limit, Plastic Limit, and Plasticity Index of Soils

ITEM P-217 AGGREGATE-TURF PAVEMENT

DESCRIPTION

217-1.1 This item shall consist of an aggregate-turf pavement composed of a base course of soil-bound crushed stone, soil-bound gravel, or soil-bound sand, and a seedbed of suitable soil or combination of soil and aggregate, constructed on a prepared subgrade or a previously constructed underlying course in accordance with these specifications, and shall conform to the dimensions and typical cross section shown on the plans.

This item may include the furnishing and applying of fertilizer, lime, top-soil, or other plant nutrients; the furnishing and planting of seed; and the furnishing and spreading of mulch. When any of these turfing materials are required, the quality, quantity, and construction methods shall be in accordance with applicable FAA Turf Specifications. When turf is to be established, the seedbed soil or topsoil shall be a natural friable soil, possessing characteristics of the best locally obtainable soils, which can produce a fairly heavy growth of crops, grass, or other vegetation.

The prepared composite mixture of aggregates used for the base course shall be **[Type A, B, or C, of Table 1][stabilizer aggregate of Table 2 mixed with in-place materials]**.

MATERIALS

217-2.1 STABILIZED MIXES. The designated stabilized base course mixtures shall conform to the following requirements.

Type A - The materials shall be natural or artificial mixtures of clay or soil binder and gravel, stone or sand, as screenings proportioned to meet the requirements specified.

Type B or C - The materials shall be natural or artificial mixtures of gravel, stone, or slag and soil so proportioned as to meet the requirement specified. The aggregate shall consist of clean, hard durable particles of crushed or uncrushed gravel, stone, or slag, and shall be free from soft, thin, elongated, or laminated pieces, and vegetable or other deleterious substances.

The prepared composite mixture used shall meet one of the applicable gradation requirements as follows when tested in accordance with ASTM C 136.

TABLE 1. REQUIREMENTS FOR GRADATION OF MIXTURE

Sieve Designation (square openings)	Percentage by weight passing sieves		
	A	B	C
2 inch (50.0 mm)			100
1 inch (24.0 mm)	100	100	70-95
¾ inch (19.0 mm)		70-100	
No. 4 (4.75 mm)			40-70
No. 10 (2.00 mm)	60-100	40-70	32-60
No. 20 (.085 mm)	50-90		
No. 40 (0.425 mm)	40-75	20-45	20-40
No. 200 (0.075 mm)	12-30	10-20	10-20

The fraction of the composite mixture passing the No. 200 (0.075 mm) mesh sieve shall be less than two-thirds of the fraction passing the No. 40 (0.425 mm) mesh sieve. the fraction passing the No. 40 (0.425 mm) mesh sieve shall have a liquid limit not greater than 30 and a plasticity index not greater than 8 when tested in accordance with ASTM D 4318.

217-2.2 STABILIZER AGGREGATE. Stabilizer aggregate conforming to one of the gradations specified in Table 2, when tested in accordance with ASTM C 136, shall be placed upon the existing soil or base course in the specified quantity per square yard (square meter). The aggregate shall be uniformly blended with the soil or base course material to the depth required or as shown on the plans. The aggregate shall consist of crushed stone, crushed or uncrushed gravel, or crushed slag, and it shall have a percent of wear not more than 60 at 500 revolutions as determined by ASTM C 131. The aggregate shall be free from soft, thin, elongated, or laminated pieces, disintegrated material, or other deleterious substances.

Where sand, as existing subgrade or base, requires stabilization, it shall be secured by the addition of clay or lime rock. The operations of spreading and mixing shall be handled as stated under construction methods.

TABLE 2. REQUIREMENTS FOR GRADATION OF STABILIZER AGGREGATE

Sieve designation (square openings)	Percentage by weight passing sieves		
	D	E	F
2 inch (50.0 mm)		100	
1½ inch (37.5 mm)	100		
1 inch (24.0 mm)	90–100		
½ inch (12.5 mm)		0–15	100
No. 4 (4.75 mm)	20–50		85–100
No. 10 (2.00 mm)	0–10		
No. 100 (0.150 mm)			0–30

CONSTRUCTION METHODS

217-3.1 OPERATION IN PITS. All work involved in clearing and stripping pits, including handling of unsuitable material, shall be performed by the Contractor at his/her own expense. The base or binder material shall be obtained from approved sources. The material in the pits shall be excavated and handled in a manner that will secure a uniform and satisfactory product.

217-3.2 EQUIPMENT. All equipment necessary for the proper construction of this work shall be on the project in first-class working condition and approved by the Engineer before construction is permitted to start.

217-3.3 PREPARING SUBGRADE. Before any base course material is placed, the subgrade or underlying course shall be prepared and conditioned as specified. The underlying course shall be checked and accepted by the Engineer before placing and spreading operations are started.

217-3.4 PLACING MATERIALS.

a. All new material shall be placed on the prepared course and compacted in layers of the thickness shown on the plans. The depositing and spreading of the material on the prepared and completed layer shall commence where designated and shall progress without breaks. The material shall be deposited and spread in lanes in a uniform layer and without segregation of size to such loose depth that, when compacted, the layer will have the required thickness. The material shall be spread with approved equipment. When it is necessary to combine materials from different sources, it may be done either at the pits, in a processing plant prior to delivery of the material, or on the course in the proper proportions and in successive spreadings that give the required gradation and thickness of layer. If the combining is done on the course, the mixing shall be as specified hereinafter.

b. When it is necessary to blend new material with material on the existing surface, the existing surface shall first be scarified lightly and bladed to uniform grade and cross section as shown on the plans.

After blading, and when necessary, the existing surface shall be further scarified and/or pulverized to provide sufficient loose material of the required depth to be mixed with the added material.

217-3.5 SPREADING AND MIXING.

a. Materials that have been mixed and processed in a processing plant at the pits, or elsewhere, shall be delivered and spread to the required depth.

b. Following the placing of the required materials being combined on the base course, the total base material shall be thoroughly pulverized and mixed by approved rotary-pulverizing mixers. The moisture content of the aggregate and soil binder shall be as specified by the Engineer to secure thorough mixing and the required compaction. The mixing shall produce a homogeneous mass of the specified gradation and soil characteristics to form a base course of the desired qualities. When the mixing is completed, the material shall be spread in a uniform layer which, when compacted, shall meet the requirements for thickness and typical cross section.

217-3.6 COMPACTION. Immediately after completion of the spreading operations, the material shall be thoroughly compacted. The number, type, and weight of rollers shall be sufficient to compact the material to the required density.

The field density of the compacted material shall be at least 90 percent of the maximum density of laboratory specimens prepared from samples of the subbase material taken from the material delivered to the jobsite. The laboratory specimens shall be compacted and tested in accordance with ASTM D 698. The in-place field density shall be determined in accordance with ASTM D 1556 or ASTM D 2167. The moisture content of the material at the start of compaction shall not be below nor more than 1-1/2 percentage points above the optimum moisture content.

217-3.7 SURFACE TEST, THICKNESS, AND MAINTENANCE. The surface shall not deviate more than 1/2 inch (12 mm) when tested with a 16-foot (4.8 m) straightedge applied parallel with, and at right angles to, the centerline. Any deviation in excess of this amount shall be corrected by loosening, adding, or removing material, reshaping, and recompacting.

The thickness of the base course shall be determined by depth tests or cores taken at intervals in such manner that each test shall represent not more than 500 square yards (418 square meters). When the base deficiency exceeds 1/2 inch (12 mm), it shall be corrected. The Contractor shall replace, at his/her expense, the base material where borings have been taken for test purposes.

The surface of the base course shall be maintained and kept in a well-drained condition until the construction of another course. Sprinkling, blading, and rolling shall be performed when necessary to prevent the base material from becoming unbonded.

217-3.8 TURF-SURFACING. Following the construction of the soil-aggregate base, the Contractor shall prepare the seedbed for the turf. If topsoil is to be placed, the surface of the base course shall be loosened slightly, as directed by the Engineer. If seeding is to be done without topsoiling, the surface of the base shall be loosened sufficiently to prepare a seedbed. This can be accomplished by discing, harrowing, rotary-tilling, or other approved methods, and should be to a depth not less than 1 inch (25 mm) nor greater than 3 inches (75 mm). Any topsoil shall be spread to the depth as required. The seedbed preparation, applying lime, fertilizer and water, seeding, rolling and mulching, shall be performed in accordance with the specification requirements.

METHOD OF MEASUREMENT

217-4.1 Soil-aggregate base course shall be measured by the number of cubic yards (cubic meters) of base course material placed, bonded, and accepted in the completed base course. The quantity shall be measured in final position based on depth tests or cores, or by means of average end areas on the completed work.

Stabilizer aggregate shall be measured by the number of cubic yards (cubic meters) of aggregate furnished, placed, and accepted in the completed base course.

When approved materials in-place are utilized in the base course, the preparation and incorporation of other materials in the base mixture shall be measured as a conditioning and mixing operation. Conditioning shall be measured by the number of square yards (square meters) of such material prepared and incorporated in the mix, completed, and accepted.

[Topsoil shall be measured by the number of cubic yards (cubic meters) of topsoil removed, placed, and spread in the accepted work.]

[Lime and fertilizer shall be measured by the number of tons (kg) or 100-pound (45.4 kg) sacks, of the quality specified in the bid schedule, furnished, incorporated, and accepted.]

[Seeding shall be measured by the number of acres seeded, and accepted.]

[Watering for planting shall be measured by the number of 1,000-gallon (4000 liters) units of water measured by an approved water meter or in the vehicle at the point of delivery, furnished and applied as specified or ordered.]

[Mulching shall be measured by the number of acres mulched, and accepted.]

BASIS OF PAYMENT

217-5.1 Payment shall be made at the contract unit price per cubic yard (cubic meter) for soil- aggregate base course; at the contract unit price per cubic yard (cubic meter) for stabilizer aggregate; at the contract unit price per square yard (square meter) for conditioning operation; at the contract unit price per cubic yard (cubic meter) for topsoil; at the contract unit price per ton (kg) for lime; at the contract unit price per ton (kg) for fertilizer; at the contract unit price per acre for seeding; at the contract unit price per 1,000-gallon (4000 liter) unit for watering; and at the contract unit price per acre for mulching. These prices shall be full compensation for furnishing all materials and for all preparation, hauling, and placing of these materials; and for all labor, equipment, tools, and incidentals necessary to complete the item.

Payment will be made under:

Item P-217-5.1	Soil Aggregate Base Course--per cubic yard (cubic meter)
Item P-217-5.2	Stabilizer Aggregate--per cubic yard (cubic meter)
Item P-217-5.3	Conditioning Operation--per square yard (square meter)
Item P-217-5.4	Topsoil--per cubic yard (cubic meter)
Item P-217-5.5	Lime--per ton (kg)
Item P-217-5.6	Fertilizer--per ton (kg)
Item P-217-5.7	Seeding--per acre
Item P-217-5.8	Watering--per 1,000-gallon (4000 liter) unit
Item P-217-5.9	Mulching--per acre

* *

The Engineer shall include only those items shown in the bid schedule.

* *

TESTING REQUIREMENTS

ASTM C 131	Resistance to Abrasion of Small Size Coarse Aggregate by Use of the Los Angeles Machine
ASTM C 136	Sieve or Screen Analysis of Fine and Coarse Aggregate

ASTM D 698	Moisture-Density Relations of Soils and Soil-Aggregate Mixtures Using 5.5 lb (2.49 kg) Rammer and 12-inch (300 mm) Drop
ASTM D 1556	Density of Soil in Place by the Sand-Cone Method
ASTM D 2167	Density of Soil in Place by the Rubber-Ballon Method

PART IV—RIGID BASE COURSES

ITEM P-301 SOIL-CEMENT BASE COURSE

DESCRIPTION

301-1.1 This item shall consist of constructing a base course by uniformly mixing together soil, portland cement, and water. The mixed material shall be spread, shaped, and compacted in accordance with these specifications and in conformity to the dimensions and typical cross section shown on the plans.

Runway, taxiway, or apron pavements shall be built in a series of parallel lanes using a plan of processing that reduces longitudinal and transverse joints to a minimum.

MATERIALS

301-2.1 PORTLAND CEMENT. Portland cement shall conform to the requirements of ASTM
[ ]

* *

The Engineer shall specify ASTM C 150, Type I, II, III, IV, or IV.

* *

301-2.2 WATER. Water shall be clean and free from sewage, oil, acid, strong alkalies, or vegetable matter. Water of questionable quality shall be tested in accordance with the requirements of AASHO T 26.

301-2.3 SOIL. The soil shall consist of an approved select soil. The soil shall be free of roots, sod, weeds, and shall not contain gravel or stone retained on a 1-inch (25 m) sieve or more than 45% retained on a No. 4 sieve, as determined by ASTM C 136.

301-2.4 BITUMINOUS MATERIAL. The types, grades, controlling specifications, and application temperatures for the bituminous materials used for curing the soil-cement are listed in Table 1. The Engineer shall designate the specific material used.

TABLE 1. BITUMINOUS MATERIALS

Type and Grade	Specification	Application Temperature	
		Deg. F	Deg. C
Cutback Asphalt			
RC-70	ASTM D 2028	120-160	50-70
RC-250	ASTM D 2028	160-200	70-95
Emulsified Asphalt			
RS-1, SS-1	ASTM D 977	75-130	25-55
CRS-1	ASTM D 2397	75-130	25-55

CEMENT QUANTITY

301-3.1 LABORATORY SOIL TESTS. Prior to base course construction, laboratory tests of soils shall be made to determine the quantity of cement required in the mix.

Test specimens containing various amounts of cement are to be compacted in accordance with ASTM D 558, and the optimum moisture for each amount of cement is to be determined. Samples at the optimum moisture shall be subjected to the wet-dry and the freeze-thaw test in accordance with ASTM D 559 and D 560, respectively.

The specified cement content for construction shall be that at which the weight loss of the specimens subjected to 12 cycles of either the wet-dry or the freeze-thaw is not more than 14% for granular soils, 10% for the more plastic granular and silty soils, and 7% for clay soils.

The compressive strength of soaked specimens should increase both with age and with increase in cement content.

CONSTRUCTION METHODS

301-4.1 WEATHER LIMITATIONS. The soil-cement base shall not be mixed or placed while the atmospheric temperature is below 35° F (2° C) or when conditions indicate that the temperature may fall below 35° F (2° C) within 24 hours, or when the weather is foggy or rainy, or when the soil or subgrade is frozen.

301-4.2 EQUIPMENT. The soil-cement may be constructed with any equipment that will meet the requirements for soil pulverization, cement application, mixing, water application, incorporation of materials, compaction, finishing, and curing specified herein.

301-4.3 PREPARATION. The area to be paved shall be graded and shaped to conform to the grades and typical cross section shown on the plans. Any soft or yielding areas in the subgrade shall be removed and replaced with acceptable soil and compacted as specified.

301-4.4 PULVERIZATION. The soil for the base course shall be so pulverized that at the completion of moist-mixing, 100% by dry weight passes a 1-inch (25 mm) sieve and a minimum of 80% passes a No. 4 sieve, exclusive of gravel or stone retained on the No. 4 sieve.

301-4.5 CEMENT APPLICATION, MIXING, AND SPREADING. Mixing of the soil, cement, and water shall be accomplished either by the mixed-in-place or the central-plant-mixed method.

The percentage of moisture in the soil, at the time of cement application, shall not exceed the quantity that will permit a uniform and intimate mixture of soil and cement during mixing operations, and it shall not exceed the specified optimum moisture content for the soil-cement mixture.

Method A - Mixed-in-place. The specified quantity of cement shall be spread uniformly on the soil.

Cement that has been displaced shall be replaced before mixing is started. After the cement has been applied, it shall be mixed with the soil. Mixing shall continue until the cement has been sufficiently blended with the soil to prevent the formation of cement balls when water is applied.

Immediately after the soil and cement have been mixed, water shall be incorporated into the mixture. Excessive concentrations of water on or near the surface shall be avoided. A water supply and pressure distributing equipment shall be provided that will assure the application within 3 hours of all mixing water on the section being processed. After all mixing water has been applied, mixing shall continue until a uniform and intimate mixture of soil, cement, and water has been obtained.

Method B - Central plant mixed. The soil, cement, and water shall be mixed in a pugmill, either of the batch or continuous-flow type. The plant shall be equipped with feeding and metering devices which will add the soil, cement, and water into the mixer in the specified quantities. Soil and cement shall be mixed sufficiently to prevent cement balls from forming when water is added. Mixing shall continue until a uniform and intimate mixture of soil, cement, and water is obtained.

The mixture shall be hauled to the project in trucks equipped with protective covers. The mixture shall be placed on the moistened subgrade in a uniform layer by an approved spreader(s). Not more than 30 minutes shall elapse between the placement of soil-cement in adjacent lanes.

The layer of soil-cement shall be uniform in thickness and surface contour and of such quantity that the completed base will conform to the required grade and cross section. Dumping of the mixture in piles or windrows upon the subgrade will not be permitted.

Not more than 60 minutes shall elapse between the start of moist mixing and the start of compaction of soil-cement.

301-4.6 COMPACTION. Immediately upon completion of the spreading operations, the mixture shall be thoroughly compacted. The number, type, and weight of rollers shall be sufficient to compact the mixture to the required density.

The field density of the compacted mixture shall be at least 98 percent of the maximum density of laboratory specimens prepared from samples of the cement-treated base material taken from the material in place. The specimens shall be compacted and tested in accordance with ASTM D 558. The in-place field desnity shall be determined in accordance with ASTM D 1556 or ASTM D 2167. Any mixture that has not been compacted shall not be left undisturbed for more than 30 minutes. The moisture content of the mixture at the start of compaction shall not be below nor more than 2 percentage points above the optimum moisture content. The optimum moisture content shall be determined in accordance with ASTM D 558 and shall be less than that amount which will cause the mixture to become unstable during compaction and finishing.

301-4.7 FINISHING. Finishing operations shall be completed during daylight hours, and the completed base course shall conform to the required lines, grades, and cross section. If necessary, the surface shall be lightly scarified to eliminate any imprints made by the compacting or shaping equipment. The surface shall then be recompacted to the required density.

301-4.8 CONSTRUCTION JOINTS. At the end of each day's run, a transverse construction joint shall be formed by a header or by cutting back into the compacted material to form a true vertical face free of loose material.

The protection provided for construction joints shall permit the placing, spreading, and compacting of base material without injury to the work previously laid. Where it is necessary to operate or turn any equipment on the completed base course, sufficient protection and cover shall be provided to prevent damage to the finished surface. A supply of mats or wooden planks shall be maintained and used as approved and directed by the Engineer.

Care shall be exercised to ensure thorough compaction of the base material immediately adjacent to all construction joints. When spreading or compacting base material adjacent to a previously constructed lane, care shall be taken to prevent injury to the work already constructed.

301-4.10 PROTECTION AND CURING. After the base course has been finished as specified herein, it shall be protected against drying for a period of 7 days by the application of bituminous material or other acceptable methods. The curing method shall begin as soon as possible, but no later than 24 hours after the completion of finishing operations. The finished base course shall be kept moist continuously until the curing material is placed.

The bituminous material specified shall be uniformly applied to the surface of the completed base course at the rate of approximately 0.2 gallon per square yard (0.92 liter/square meter) with approved heating and distributing equipment. The exact rate and temperature of application to give complete coverage without excessive runoff shall be as specified.

At the time the bituminous material is applied, the surface shall be dense, free of all loose and extraneous material, and shall contain sufficient moisture to prevent penetration of the bituminous material. Water shall be applied in sufficient quantity to fill the surface voids immediately before the bituminous curing material is applied.

The curing material shall be maintained and applied as needed by the Contractor during the 7-day protection period so that all of the soil-cement will be covered effectively during this period.

Finished portions of soil-cement that are used by equipment in constructing an adjoining section shall be protected to prevent equipment from marring or damaging the completed work.

When the air temperature may be expected to reach the freezing point, sufficient protection from freezing shall be given the soil-cement for 7 days after its construction and until it has hardened.

Other curing materials such as moist straw or hay may be used if approved.

301-4.11 CONSTRUCTION LIMITATIONS. When any of the operations after the application of cement are interrupted for more than 30 minutes or when the uncompacted soil-cement mixture is wetted by rain so that the moisture content is exceeded by a small amount, the decision to reconstruct the portion affected

shall rest with the Engineer. In the event the uncompacted, rain-wetted mixture exceeds the specified moisture content tolerance, the Contractor shall reconstruct at his/her expense the portion affected. All material along the longitudinal or transverse construction joints not properly compacted shall be removed and replaced, at the Contractor's expense, with properly moistened and mixed soil-cement compacted to specified density.

301-4.12 SURFACE TESTS. The finished surface shall not vary more than 3/8 inch (9 mm) when tested with a 16-foot (4.8 m) straightedge applied parallel with, or at right angles to, the longitudinal axis of the pavement. Any variations in excess of this tolerance shall be corrected by the Contractor, at his/her own expense, and in a manner satisfactory to the Engineer.

301-4.13 THICKNESS. The thickness of the soil-cement base course shall be determined from measurements of cores drilled from the finished base or from thickness measurements at holes drilled in the base at intervals so that each test shall represent no more than 300 square yards (250 square meters). The average thickness of the base constructed during one day shall be within 1/2 inch (12 mm) of the thickness shown on the plans, except that the thickness of any one point may be within 3/4 inch (13 mm) of that shown on the plans. Where the average thickness shown by the measurements made in one day's construction is not within the tolerance given, the Engineer shall evaluate the area and determine if, in his/her opinion, it shall be reconstructed at the Contractor's expense or the deficiency deducted from the total material in place.

301-4.14 MAINTENANCE. The Contractor shall be required to maintain, at his/her own expense, the entire base course within the limits of his/her contract in a condition satisfactory to the Engineer from the time he starts work until all the work has been completed. Maintenance shall include immediate repairs of any defects that may occur either before or after the cement is applied. The work shall be done by the Contractor at his/her own expense and repeated as often as necessary to keep the area intact at all times. Repairs shall be made in a manner that will insure restoration of a uniform surface and the durability of the part repaired. Faulty work must be replaced for the full depth of treatment. Any low areas shall be remedied by replacing the material for the full depth of treatment rather than by adding a thin layer of soil-cement to the completed work.

METHOD OF MEASUREMENT

301-5.1 The quantity of soil-cement base course to be paid for shall be the number of square yards (square meters) of completed and accepted base course.

301-5.2 Portland cement shall be measured by the hundredweight.

BASIS OF PAYMENT

301-6.1 Payment shall be made at the contract unit price per square yard (square meter) for soil-cement base course. This price shall be full compensation for furnishing all materials, except portland cement, and for all preparation, delivering, placing, and mixing of these materials; and for all labor, equipment, tools and incidentals necessary to complete the item.

301-6.2 Payment shall be made at the contract unit price per hundredweight for cement. This price shall be full compensation for furnishing this material and for all delivery, placing, and incorporation of this material, and for all labor, equipment, tools, and incidentals necessary to complete the item.

Payment will be made under:

Item P-301-6.1	Soil-Cement Base Course--per square yard (square meter)
Item P-301-6.2	Portland Cement--per hundredweight

TEST REQUIREMENTS

ASTM C 136	Sieve or Screen Analysis of Fine and Coarse Aggregate
ASTM D 558	Moisture-Density Relations of Soil-Cement Mixtures
ASTM D 559	Wetting-and-Drying Tests of Compacted Soil-Cement Mixtures
ASTM D 560	Freezing-and-Thawing Tests of Compacted Soil-Cement Mixtures
ASTM D 1556	Test for Density of Soil In-Place by the Sand Cone Method
ASTM D 2167	Test for Density of Soil In-Place by the Rubber Ballon Method
AASHTO T 26	Quality of Water to be Used in Concrete

MATERIAL REQUIREMENTS

ASTM C 150	Portland Cement
ASTM D 977	Emulsified Asphalt
ASTM D 2028	Liquid Asphalt (Rapid Curing Type)
ASTM D 2397	Cationic Emulsified Asphalt

ITEM P-304 CEMENT-TREATED BASE COURSE

DESCRIPTION

304-1.1 This item shall consist of a base course composed of mineral aggregate and cement uniformly blended and mixed with water. The mixed material shall be spread, shaped, and compacted in accordance with these specifications and in conformity to the lines, grades, dimensions, and typical cross sections shown on the plans. Runway, taxiway, or apron pavements shall be built in a series of parallel lanes using a plan of processing that reduces longitudinal and transverse joints to a minimum.

MATERIALS

304-2.1 PORTLAND CEMENT. Portland cement shall conform to the requirements of ASTM [ ].

* *

The Engineer shall specify ASTM C 150 Type I, II, III, IV, or V or ASTM C 595 Type IS, IS-A, IP, IP-A, P, or PA. Lean porous concretes such as cement-treated base courses are more susceptible to sulfate attack than are structural and pavement concretes. Consideration should be given to possible detrimental sulfate effects from the presence of pyrites, gypsum, or other sulfates in subgrade soils, ground water, or aggregates. Sulfate-resistant cements should be specified when dangerous quantities of sulfates are likely to be present.

* *

304-2.2 WATER. Water shall be clean, clear, and free from injurious amounts of sewage, oil, acid, strong alkalies, or vegetable matter, and it shall be free from clay or silt. if the water is of questionable quality, it shall be tested in accordance with the requirements of AASHO T 26.

304-2.3 AGGREGATE. The aggregate shall be select granular materials meeting the gradation requirements given in Table 1. The material shall be free of roots, sod, and weeds. The crushed or uncrushed aggregate shall consist of hard, durable particles of accepted quality, free from an excess of flat, elongated, soft, or disintegrated pieces, or objectionable matter. The method used in producing the aggregate shall be such that the finished product shall be as consistent as practicable. All stones and rocks of inferior quality shall be wasted.

Aggregates suspected of containing injurious quantities of sulfates shall be examined petrographically in accordance with ASTM C 295.

* *

While not wholly conclusive, petrographic examination will provide a valuable indicator of any substances that may be deleteriously reactive with the alkalies in the cement in an amount sufficient to cause expansion in the cement-treated base course.

* *

The aggregate shall conform to the gradation shown in Table 1 when tested in accordance with ASTM C 136.

TABLE 1. AGGREGATE CEMENT-TREATED BASE COURSE

Sieve Size	Percentage by Weight Passing Sieves
2 in. (50 mm)	*
No. 4 (4.75 mm)	*
No. 10 (1.80 mm)	*
No. 40 (450 micro-m)	*
No. 80 (210 micro-m)	*

****

The aggregate gradation band applicable to a project shall be specified by the Engineer from the gradations shown in this note. The gradation shall be inserted in Table 1. Insert points are denoted by asterisks.

Percentage by Weight Passing Sieves

Sieve Size	A	B
2 in. (50 mm)	100 [1]	100 [1]
No. 4 (4.75 mm)	45-100	55-100
No. 10 (1.80 mm)	37-80	45-100
No. 40 (450 micro-m)	15-50	25-80
No. 80 (210 micro-m)	0-25	10-35

[1] Maximum size of aggregate is 1 inch (25 mm) when used as a base course under Item P-501, Portland Cement Concrete Pavement.

Where locally available aggregates cannot be economically blended to meet the grading requirements of the gradations shown, the gradations may be modified to fit the characteristics of such local aggregates. The modified gradation must produce a mixture that meets the compressive strength requirements of paragraph 304-3.1. State highway department gradations can frequently be used to meet the requirements of this standard.

****

The gradations in the table represent the limits which shall determine suitability of aggregate for use from the sources of supply. The final gradations decided on, within the limits designated in the table, shall be well graded from coarse to fine and shall not vary from the low limit on one sieve to the high limit on adjacent sieves, or vice versa. The portion of the base aggregate, including any blended material, passing the No. 40 sieve shall have a liquid limit of not more than 25 and a plasticity index of not more than 6 when tested in accordance with ASTM D 4318.

All aggregate samples required for testing shall be furnished by the Contractor at the expense of the Contractor. Sampling shall be in accordance with ASTM D 75 and will be observed by the Engineer. No aggregate shall be used in production of mixtures without prior approval.

304-2.4 BITUMINOUS MATERIAL. The types, grades, and controlling specifications and application temperatures for the bituminous material are given in Table 2.

The Engineer shall specify the type and grade of bituminous material to be used.

TABLE 2. BITUMINOUS MATERIAL

Type and Grade	Specification	Application Temperature	
		Deg. F	Deg. C
Cutback Asphalt			
RC-70	ASTM D 2028	120-160	50-70
RC-250		160-200	70-95
Emulsified Asphalt			
RS-1, SS-1	ASTM D 977	75-130	25-55
CRS-1	ASTM D 2397	75-130	25-55

CEMENT CONTENT

304-3.1 Prior to start of work, laboratory tests of materials submitted by the Contractor shall be made to determine the quantity of cement required in the mix. The cement content for construction shall be that at which the mix develops a 7-day compressive strength of at least 750 psi (5 170 kPa). the testing procedure shall be as follows: mold and cure specimens in accordance with ASTM D 560; soak specimens in water for 4 hours; cap and break specimens in compression in accordance with ASTM D 1633.

* *

In areas subject to considerable freeze-thaw cycles, the Engineer may also specify that the freeze-thaw weight loss shall not exceed 14 percent when tested in accordance with ASTM D 560.

An estimated cement content may be determined from Table 1, Chapter 2, of the Soil-Cement Laboratory Handbook, published by the Portland Cement Association. Cement contents above and below that estimated should be used in determining the quantity of cement needed to achieve the required strength.

* *

CONSTRUCTION METHODS

304-4.1 WEATHER LIMITATIONS. The cement-treated base shall not be mixed or placed while the atmospheric temperature is below 40° F (4° C) or when conditions indicate that the temperature may fall below 35° F (2° C) within 24 hours or when the weather is rainy. Cement-treated base shall not be placed on frozen subgrade or mixed when aggregate is frozen.

304-4.2 OPERATION AT PITS. All work involved in clearing and stripping pits, including handling unsuitable material, shall be performed by the Contractor. The Contractor shall notify the Engineer sufficiently in advance of opening of any designated pit to permit staking of boundaries at the site, to take elevations and measurements of the ground surface before material is produced, to permit the Engineer to take samples of the material for tests to determine its quality and gradation, and to prepare a preliminary design of base mixture.

The pits, as utilized, shall be opened immediately to expose vertical faces of the various strata of acceptable material and, unless otherwise directed, the material shall be secured in successive vertical cuts extending through all the exposed strata in order to secure a uniform material.

304-4.3 PREPARING UNDERLYING COURSE. The underlying course shall be checked and accepted by the Engineer before placing and spreading operations are started. Any ruts or soft yielding places caused by improper drainage conditions, hauling, or any other cause shall be corrected before the base course is placed thereon.

304-4.4 MIXING. The aggregate shall be proportioned and mixed with cement and water in a central mixing plant. The plant shall be equipped with feeding and metering devices which will introduce the cement, aggregate, and water into the mixer in the quantities specified. Mixing shall continue until a thorough and uniform mixture has been obtained.

304-4.5 PLACING. The mixture shall be transported to the job site in suitable vehicles and shall be deposited on the moistened subbase in uniform layers by means of approved mechanical spreaders. Not more than 60 minutes shall elapse between the start of moist mixing and the start of compaction of the cement-treated mixture on the prepared subgrade.

304-4.6 COMPACTION. Immediately upon completion of the spreading operations, the mixture shall be thoroughly compacted. The number, type, and weight of rollers shall be sufficient to compact the mixture to the required density.

The field density of the compacted mixture shall be at least 98 percent of the maximum density of laboratory specimens prepared from samples of the cement-treated base material taken from the material in place. The specimens shall be compacted and tested in accordance with ASTM D 558. The in-place field density shall be determined in accordance with ASTM D 1556 or ASTM D 2167. Any mixture that has not been compacted shall not be left undisturbed for more than 30 minutes. The moisture content of the mixture at the start of compaction shall not be below nor more than 2 percentage points above the optimum moisture content. The optimum moisture content shall be determined in accordance with ASTM D 558 and shall be less than that amount which will cause the mixture to become unstable during compaction and finishing.

* *

The following optional paragraph applies when cement-treated base course is to be accepted for density on a statistical basis. Delete the paragraph below if not applicable. If applicable, substitute for paragraph 304-4.6.

* *

ACCEPTANCE SAMPLING AND TESTING OF CEMENT-TREATED BASE COURSE (COMPACTION). Immediately upon completion of the spreading operations, the mixture shall be thoroughly compacted. The number, type, and weight of rollers shall be sufficient to compact the mixture to the required density.

The cement-treated base course shall be accepted for density on a lot basis. A lot will consist of [ ] and will be divided into four equal sublots. One test shall be made for each sublot. Sampling locations will be determined by the Engineer on a random basis in accordance with statistical procedures contained in ASTM D 3665.

Each lot of compacted material will be accepted, with respect to density, when the average field density is equal to or greater than 98 percent of the maximum density of laboratory specimens prepared from samples of cement-treated base course taken from the material in place.

The laboratory specimens shall be compacted and tested in accordance with ASTM D 558. The in-place field density shall be determined in accordance with ASTM D 1556 or ASTM D 2167.

The lot will be accepted without adjustment in payment if the average density, based on four acceptance tests of the lot, is greater than or equal to 98 percent. If the average density does not meet this requirement, the Contractor may elect to leave the lot in place at a reduced unit price determined in accordance with Table 3.

TABLE 3. SLIDING SCALE PAY FACTORS

Average Percent Density	Recommended Percent Payment
98.0 and greater	100
97.0–97.9	95
96.0–96.9	90
95.0–95.9	75
Less than 95.0	reject

Any mixture that has not been compacted shall not be left undistributed for more than 30 minutes. The moisture content of the mixture at the start of compaction shall not be below nor more than 2 percentage points above the optimum moisture content. The optimum moisture content shall be determined in accordance with ASTM D 558 and shall be less than that amount which will cause the mixture to become unstable during compaction and finishing.

* *

A lot is the quantity of material to be controlled. The lot size, to be specified by the Engineer, should not exceed 1200 square yards (1 003 square meters) or 200 cubic yards (153 cubic meters). One day's production may be specified as the lot size where it is not expected to exceed 1200 square yards (1 003 square meters) or 200 cubic yards (153 cubic meters).

* *

304–4.7 LAYER THICKNESS. The maximum depth of a compacted layer shall be 6 inches (150 mm), except where that total depth of the compacted base course is required to be greater than 6 inches (150 mm), no layer shall be in excess of 8 inches (200 mm) or less than 4 inches (100 mm) when compacted. In multilayer construction, the surface of the compacted material shall be kept moist until covered with the next layer. Successive layers shall be placed and compacted so that the required total depth of the base course is completed the same day.

304–4.8 FINISHING. Finishing operations shall be completed during daylight hours, and the completed base course shall conform to the required lines, grades, and cross section. If necessary, the surface shall be lightly scarified to eliminate any imprints made by the compacting or shaping equipment. The surface shall then be recompacted to the required density. The compaction and finishing operations shall be completed within 2 hours of the time water is added to the mixture and shall produce a smooth, dense surface that is free of surface checking, ridges, or loose material.

304–4.9 SURFACE TOLERANCE. The finished surface shall not vary more than 3/8 inch (9 mm) when tested with a 16-foot (4.8 m) straightedge applied parallel with, or at right angles to, the centerline of the stabilized area. Any deviation in excess of this amount shall be corrected by the Contractor at the Contractor's expense.

304–4.10 CONSTRUCTION JOINTS. At the end of each day's construction, a transverse construction joint shall be formed by a header or by cutting back into the compacted material to form a true vertical face free of loose material.

Longitudinal joints shall be formed by cutting back into the compacted material to form a true vertical edge.

304–4.11 PROTECTION AND CURING. The completed cement-treated base shall be cured with a bituminous curing seal applied as soon as possible, and in no case later than 24 hours after completion of the finishing operations. The surface of the base course shall be kept moist until the bituminous material is applied.

Bituminous material shall be uniformly applied at a rate of between 0.10 and 0.25 gallons per square yard (0.47 and 1.20 liters per square meter) of surface. The rate of application shall be approved by the Engineer.

The curing seal shall be maintained and protected for 7 days.

Finished portions of the base course that are used by equipment in the construction of an adjoining section shall be protected to prevent marring or damaging the completed work. The stabilized area shall be protected from freezing during the curing period.

METHOD OF MEASUREMENT

304-5.1 The quantity of cement-treated base to be paid for will be determined by measurement of the number of **[square yards (square meters)]** **[cubic yards (cubic meters)]** of base actually constructed and accepted by the Engineer as complying with the plans and specifications.

304-5.2 Portland cement will be measured by the hundredweight.

BASIS OF PAYMENT

304-6.1 Payment shall be made at the contract unit price per **[square yard (square meter)]** **[cubic yard (cubic meter)]** for cement-treated base course. This price shall be full compensation for furnishing all materials, except portland cement; for all preparation, manipulation, and placing of these materials; and for all labor, equipment, tools, and incidentals necessary to complete the item.

* *

The following optional paragraph applies when cement-treated base course is accepted for density as described under notes in paragraph 304-4.6. Delete the paragraph below if not applicable.

* *

Each lot of cement-treated base course will be accepted for density at the full contract unit price when the results of four density tests indicate that the average density is equal to or greater than 98 percent as determined by paragraph 304-4.6. Each lot not meeting this requirement will be accepted at an adjusted contract unit price in accordance with Table 3.

304-6.2 Payment shall be made at the contract unit price per hundredweight for portland cement. This price shall be full compensation for furnishing this material; for all delivery, placing, and incorporation of this material; and for all labor, equipment, tools, and incidentals necessary to complete the item.

Payment will be made under:

Item P-304-6.1	Cement-treated base course--per **[square yard (square meter)]** **[cubic yard (cubic meter)]**
Item P-304-6.2	Portland Cement--per hundredweight

TESTING REQUIREMENTS

ASTM C 136	Sieve or Screen Analysis of Fine and Coarse Aggregate
ASTM C 295	Petrographic Examination of Aggregates for Concrete
ASTM D 75	Sampling Aggregates
ASTM D 558	Moisture-Density Relations of Soil-Cement Mixtures
ASTM D 560	Freezing-and-Thawing Tests of Compacted Soil-Cement Mixtures
ASTM D 1556	Density of Soil in Place by the Sand-Cone Method
ASTM D 1633	Compressive Strength of Molded Soil-Cement Cylinders

ASTM D 2167	Density of Soil in Place by the Rubber-Balloon Method
ASTM D 3665	Random Sampling of Paving Materials
ASTM D 4318	Liquid Limit, Plastic Limit, and Plasticity Index of Soils
AASHTO T 26	Quality of Water to be Used in Concrete

MATERIAL REQUIREMENTS

ASTM C 150	Portland Cement
ASTM C 595	Blended Hydraulic Cements
ASTM D 977	Emulsified Asphalt
ASTM D 2028	Liquid Asphalt (Rapid Curing Type)
ASTM D 2397	Cationic Emulsified Asphalt

ITEM P-306 ECONOCRETE SUBBASE COURSE

DESCRIPTION

306-1.1 This item shall consist of a subbase course composed of aggregate and cement uniformly blended together and mixed with water. The mixed material shall be spread, shaped, and compacted in accordance with these specifications and in conformity to the lines, grades, dimensions, and typical cross sections shown on the plans.

MATERIALS

306-2.1 AGGREGATE. The aggregate shall be stone or gravel, crushed or uncrushed. The fine aggregate shall be that naturally contained in the aggregate material or may be sand. The aggregate shall consist of hard, durable particles, free from excess flat, elongated, soft pieces, dirt, or other objectionable matter. The aggregate may also be a slag suitable for concrete.

A flat particle is one having a ratio of width to thickness greater than five; an elongated particle is one having a ratio of length to width greater than five.

* *

The Engineer may specify crushed portland cement concrete pavement if the existing pavement or material on hand is to be recycled.

The Engineer may specify the limits for deleterious materials contained in ASTM C 33.

* *

The aggregate shall conform to the gradation shown in Table 1 when tested in accordance with ASTM C 136.

TABLE 1. AGGREGATE - ECONOCRETE SUBBASE COURSE

Sieve Size (Square Openings)	Percentage by Weight Passing Sieves		
	2" Maximum	1½" Maximum	1" Maximum
2 in (50.8 mm)	100		
1½ in (38.1 mm)		100	
1 in (25.4 mm)	55–85	70–95	100
¾ in (19.0 mm)	50–80	55–85	70–100
No. 4 (4.75 mm)	30–60	30–60	35–65
No. 40 (0.450 mm)	10–30	10–30	15–30
No. 200 (0.75 mm)	0–15	0–15	0–15

* *

Where locally available aggregate cannot economically be blended to meet the grading requirements, or if recycled pavement is used, the gradations may be modified by the design Engineer to fit the characteristics of the available aggregates provided strength requirements are met.

* *

306-2.2 CEMENT. Cement shall conform to the requirements of ASTM C 150, Type 1.

306-2.3 WATER. Water used in mixing or curing shall be as clean and free of oil, salt, acid, alkali, sugar, vegetable, or other substances injurious to the finished product as possible. Water will be tested in accord-

ance with the requirements of AASHTO T 26. Water known to be of potable quality may be used without testing.

306-2.4 COVER MATERIAL FOR CURING. Curing materials shall conform to one of the following specifications:

a. Liquid membrane-forming compounds for curing econocrete shall conform to the requirements of ASTM C 309, Type 2, Class A or B.

b. Asphalt emulsion for curing econocrete shall conform to the requirements of ASTM D 977, Type SS-1h.

306-2.5 ADMIXTURES. The use of any material added to the econocrete mix shall be approved by the Engineer. The Contractor shall submit certificates indicating that the material to be furnished meets all the requirements listed below. In addition, the Engineer may require the Contractor to submit complete test data showing that the material to be furnished meets all the requirements of the cited specification.

a. Pozzolanic Admixtures. Pozzolanic admixtures shall be fly ash or raw or calcined natural possolans meeting the requirements of ASTM C 618.

b. Air-Entraining Admixtures. Air-entraining admixtures shall meet the requirements of ASTM C 260.

c. Water Reducing Admixtures. Water-reducing, set-controlling admixtures shall meet the requirements of ASTM C 494, Type A, water-reducing or Type D, water-reducing and retarding. Water-reducing admixtures shall be added at the mixer separately from air-entraining admixtures in accordance with the manufacturer's printed instructions. The air entrainment agent and the water-reducing admixture shall be compatible.

* *

Since the cement content is low in econocrete (which could cause poor workability for normal aggregates), the workability may be increased by extra fines in the aggregate; higher than normal amounts of entrained air; addition of pozzolanic admixtures or workability agents; or a combination of these.

* *

CONSTRUCTION METHODS

306-3.1 PROPORTIONING. Prior to the start of paving operations and after approval of all material to be used, the Contractor shall submit test data showing the proportions of materials used and the actual compressive strength obtained from the econocrete. Compressive strength shall be not less than 500 psi (3445 kPa) at 7 days and 750 psi (5167 kPa) at 28 days using test specimens prepared in accordance with ASTM C 192 and tested in accordance with ASTM C 39. The minimum allowable cement content shall be 200 pounds per cubic yard (119 kg/cubic meter).

* *

The Engineer may wish to specify an upper limit of 1200 psi (8268 kPa) since a comprehensive strength greater than 1200 psi (8268 kPa) may induce cracking in the overlying pavement.

* *

Air-entraining admixture shall be added in such a manner that will ensure uniform distribution of the agent throughout the batch. The air content of freshly mixed air-entrained econocrete shall be based upon trial mixes with the materials to be used in the work adjusted to produce a mixture of the required plasticity and workability. The percentage of air entrainment shall not be less than 4 percent or more than 9 percent. Air content shall be determined by testing in accordance with ASTM C 231 for gravel and stone coarse aggregate and ASTM C 173 for slag and other highly porous coarse aggregate. The mix shall have a slump of 1

to 3 inches (25 to 75 mm) at the time of placing the econocrete. Testing shall be in accordance with ASTM C 143.

* *

In locations subject to considerable freeze-thaw cycles, the Engineer should specify that the freeze-thaw weight loss should not exceed 14 percent when tested in accordance with ASTM D 560.

The air content should be 6-10 percent ±2 percent if the econocrete will be subject to freeze-thaw cycles.

* *

306-3.2 EQUIPMENT. Equipment and tools necessary for handling materials and performing all parts of the work shall be approved by the Engineer as to design, capacity, and mechanical condition. The equipment shall be at the job site before the start of construction operations for examination and approval.

a. Batch Plant and Equipment. The batch plant and equipment shall conform to the requirements of ASTM C 94.

b. Mixers.

(1) General. Econocrete may be mixed at a central plant, or wholly or in part in truck mixers. Each mixer shall have attached in a prominent place a manufacturer's nameplate showing the capacity of the drum in terms of volume of mixed concrete and the speed of rotation of the mixing drum or blades.

(2) Central Plant Mixer. Central plant mixers shall conform to the requirements of ASTM C 94.

The mixers shall be examined daily for changes in condition due to accumulation of hard concrete or mortar or wear of blades. The pickup and throwover blades shall be placed when they have worn down 3/4 inch (13 mm) or more. The Contractor shall have a copy of the manufacturer's design on hand showing dimensions and arrangement of blades in reference to original height and depth.

(3) Truck mixers and truck agitators. Truck mixers used for mixing and hauling econocrete and truck agitators used for hauling central-mixed econocrete shall conform to the requirements of ASTM C 94.

(4) Nonagitator trucks. Nonagitating hauling equipment shall conform to the requirements of ASTM C 94.

c. Finishing Equipment.

(1) Finishing Machine. The finishing machine shall be equipped with one or more oscillating-type transverse screeds.

(2) Vibrators. For side-form construction, vibrators may be either the surface pan type for pavements less than 8 inches (200 mm) thick or the internal type with either immersed tube or multiple spuds for the full width of the slab. They may be attached to the spreader or the finishing machine, or they may be mounted on a separate carriage. They shall not come in contact with the joint, subgrade, or side forms. The frequency of the surface vibrators shall not be less than 3,500 vibrations per minute, and the frequency of the internal type shall not be less than 7,000 vibrations per minute for spud vibrators. When spud-type internal vibrators are used adjacent to the side forms, they shall have a frequency of not less than 3,500 vibrations per minute.

For slip-form construction, the paver shall vibrate the econocrete for the full width and depth of the strip of pavement being placed. Vibration shall be accomplished by internal vibrators with a frequency range variable between 7,000 and 12,000 vibrations per minute. The amplitude of vibration shall be between 0.025 and 0.06 inches (0.6 mm and 1.5 mm).

The number, spacing, frequency, and eccentric weights shall be provided as necessary to achieve an acceptable density and finishing quality. Adequate power to operate all vibrators at the weight and frequency required for a satisfactory finish shall be available on the paver. The internal vibrators may be supplemented by vibrating screeds operating on the surface of the econocrete. The frequency of surface vibrators shall not be less than 3,500 vibrations per minute. The Contractor shall furnish a tachometer or other suitable device

for measuring the frequency of the vibrators. The vibrators and tamping elements shall be automatically controlled so that they shall be stopped as forward motion ceases. Any override switch shall be of the spring-loaded, momentary-contact type.

d. Concrete Saw. When sawing of joints is specified, the Contractor shall provide sawing equipment adequate in number of units and power to complete the sawing to the required dimensions and at the required rate. The Contractor shall provide at least one standby saw in good working order. An ample supply of saw blades shall be maintained at the site of the work at all times during sawing operations. The Contractor shall provide adequate artificial lighting facilities for night sawing. All of this equipment shall be on the job both before and at all times during econocrete placement.

e. Forms. Straight side forms shall be made of steel having a thickness of not less than 7/32 inch (6 mm) and shall be furnished in sections not less than 10 feet (3 m) in length. Forms shall have a depth equal to the prescribed edge thickness of the econocrete without horizontal joint and a base width equal to the depth of the forms. Flexible or curved forms of proper radius shall be used for curves of 100-feet (30 m) radius or less. Flexible or curved forms shall be of a design acceptable to the Engineer. Forms shall be provided with devices for secure settings so that when in place they will withstand, without visible spring or settlement, the impact and vibration of the consolidating and finishing equipment. Flange braces shall extend outward on the base not less than two-thirds the height of the form. Forms with battered top surfaces and bent, twisted, or broken forms shall be removed from the work. Repaired forms shall not be used, except as approved by the Engineer. The top face of the form shall not vary from a true plane more than 1/8 inch (3 mm) in 10 feet (3 m), and the upstanding leg shall not vary more than 1/4 inch (6 mm). The forms shall contain provisions for locking the ends of abutting sections together tightly for secure setting.

f. Slip-form Pavers. The paver shall be fully energized, self-propelled, and designed for the specific purpose of placing, consolidating, and finishing the econocrete pavement, true to grade, tolerances, and cross section. It shall be of sufficient weight and power to construct the maximum specified paving lane width as shown in the plans, at adequate forward speed, without transverse, longitudinal, or vertical instability or without displacement. The paver shall be equipped with electronic or hydraulic horizontal and vertical control devices.

306-3.3 FORM SETTING. Forms shall be set sufficiently in advance of the econocrete placement to ensure continuous paving operation. After the forms have been set to correct grade, the grade shall be thoroughly tamped, either mechanically or by hand, at both the inside and outside edges of the base of the forms. Forms shall be staked into place with not less than 3 pins for each 10-foot (3 m) section. A pin shall be placed at each side of every joint.

Form sections shall be tightly locked and shall be free from play or movement in any direction. The forms shall not deviate from true line by more than 1/4 inch (6 mm) at any joint. Forms shall be so set that they will withstand, without visible spring or settlement, the impact and vibration of the consolidating and finishing equipment. Forms shall be cleaned and oiled prior to the placing of econocrete.

The alignment and grade elevations of the forms shall be checked and corrections made by the Contractor immediately before placing the econocrete. When any form has been disturbed or any grade has become unstable, the form shall be reset and rechecked.

306-3.4 CONDITIONING OF UNDERLYING COURSE, SLIP-FORM CONSTRUCTION. The compacted subgrade on which the pavement will be placed shall be widened approximately 3 feet (90 cm) to extend beyond the paving machine track to support the paver without any noticeable displacement. After the subgrade has been placed and compacted to the required density, the areas which will support the paving machine and the area to be paved shall be trimmed to the proper elevation and profile by means of a properly designed machine. The grade of the subgrade on which the econocrete pavement is to be placed shall be controlled automatically by steel guide wires erected and maintained by the Contractor. If the density of the subgrade is disturbed by the trimming operations, it shall be corrected by additional compaction before the econocrete is placed. The grading operations should be delayed as long as possible and immediately precede paving insofar as practicable, particularly if the subgrade is subjected to haul traffic. If traffic is allowed to use the prepared grade, the grade shall be checked and corrected immediately before the placement of econocrete. The prepared grade shall be well moistened with water, without saturating, immediately ahead of econocrete placement to prevent rapid loss of moisture from the econocrete. In cold weath-

er, the underlying course shall be protected so that it will be entirely free of frost when econocrete is placed.

306-3.5 CONDITIONING OF UNDERLYING COURSE, SIDE-FORM CONSTRUCTION. The prepared grade shall be well moistened with water, without saturating, immediately ahead of econocrete placement to prevent rapid loss of moisture from the econocrete. Ruts or depressions in the subgrade caused by hauling or usage of other equipment shall be filled as they develop with suitable material and thoroughly compacted by rolling. A multi-pin templet weighting not less than 1,000 pounds (450 kg) per 20 feet (6 m) or other approved templet shall be provided and operated on the forms immediately in advance of the placing of the econocrete. The templet shall be propelled only by hand and not attached to a tractor or other power unit. Templets shall be adjustable so that they may be set and maintained at the correct contour of the underlying course. The adjustment and operation of the templet shall be such as will provide an accurate retest of the grade before placing the econocrete thereon. All excess material shall be removed. Low areas may be filled and compacted to a condition similar to that of the surrounding grade, or filled with econocrete integral with the pavement. In cold weather, the underlying course shall be protected so that it will be entirely free from frost when the econocrete is placed. The use of chemicals to eliminate frost in the underlying material will not be permitted. The template shall be maintained in accurate adjustment, at all times by the Contractor, and should be checked daily. The work described under the foregoing paragraphs does not constitute a regular subgrading operation, but rather a final accurate check of the underlying course.

306-3.6 HANDLING, MEASURING, AND BATCHING MATERIAL. The batch plant site, layout, equipment, and provisions for transporting material shall assure a continuous supply of material to the work. Stockpiles shall be built up in layers of not more than 3 feet (90 cm) in thickness. Each layer shall be completely in place before beginning the next layer and shall not be allowed to "cone" down over the next lower layer. Aggregates from different sources and of different grading shall not be stockpiled together. Improperly placed stockpiles will not be accepted by the Engineer.

Aggregates shall be handled from stockpiles or other sources to the batching plant in such manner to secure the specified grading of the material. Aggregates that have become segregated or mixed with earth or foreign material shall not be used. All aggregates produced or handled by hydraulic methods, and washed aggregates, shall be stockpiled or binned for draining at least 12 hours before being batched. Rail shipments requiring more than 12 hours will be accepted as adequate binning only if the car bodies permit free drainage. The fine aggregate and coarse aggregate shall be separately weighed into hoppers in the respective amounts set by the Engineer in the job mix except where a unit aggregate such as crusher run or pit run are used, in which case a single stockpile will be satisfactory. Cement shall be measured by weight. Separate scales and hopper, with a device to positively indicate the complete discharge of the batch of cement into the batch box or container, shall be used for weighing the cement.

When required by the contract or when permitted, batching plants shall be equipped to proportion aggregates and bulk cement, by weight, automatically using interlocked proportioning devices of an approved type. The Contractor shall use a suitable method of handling the cement from weighing hopper to transporting container or into the batch itself for transportation to the mixer, such as a chute, boot, or other approved device, to prevent loss of cement. The device shall be arranged to provide positive assurance of the actual presence in each batch of the entire cement content specified.

When cement is placed in contact with the aggregates, batches may be rejected unless mixed within 1-1/2 hours of such contact. Batching shall be conducted so that the results in the weights of each material required will be within a tolerance of 1 percent for cement and 2 percent for aggregates.

Water may be measured either by volume or by weight. The accuracy of measuring the water shall be within plus or minus 1 percent of required amounts. Unless the water is to be weighed, the water-measuring equipment shall include an auxiliary tank from which the measuring tank shall be filled.

Methods and equipment for adding air-entraining agent or other admixtures to the batch, when required, shall be approved by the Engineer. All admixtures shall be measured into the mixer with an accuracy of plus or minus 3 percent.

306-3.7 MIXING ECONOCRETE. The econocrete may be mixed at the work site, in a central mix plant or in truck mixers. The mixer shall be of an approved type and capacity. Mixing time shall be measured from the time all materials, except water, are emptied into the drum. Ready-mixed econocrete shall be mixed and delivered in accordance with the requirements of ASTM C 94, except that the minimum required revolutions of the mixing speed for transit mixed econocrete may be reduced to not less than that recommended by the mixer manufacturer. The number of revolutions recommended by the mixer manufacturer shall be indicated on the manufacturer's serial plate attached to the mixer. The Contractor shall furnish test data acceptable to the Engineer verifying that the make and model of the mixer will produce uniform econocrete conforming to the provisions of ASTM C 94 at the reduced number of revolutions shown on the serial plate.

When mixed at the work site or in a central mix plant, the mixing time shall not be less than 50 seconds nor more than 90 seconds. Mixing time ends when the discharge chute opens. Transfer time in multiple drum mixers is included in mixing time. The contents of an individual mixer drum shall be removed before a succeeding batch is emptied therein.

The mixer shall be operated at the drum speed as shown on the manufacturer's nameplate on the approved mixer. Any econocrete mixed less than the specified time shall be discarded at the Contractor's expense. The volume of econocrete mixed per bath shall not exceed the mixer's nominal capacity in cubic feet (cubic meters), as shown on the manufacturer's standard rating plate on the mixer. An overload up to 10 percent above the mixer's nominal capacity may be permitted provided test data for segregation and uniform consistency are satisfactory, and provided no spillage of econocrete takes place. The batch shall be charged into the drum so that a portion of the mixing water shall enter in advance of the cement and aggregates. The flow of water shall be uniform, and all water shall be in the drum by the end of the first 15 seconds of the mixing period. The throat of the drum shall be kept free of such accumulations as may restrict the free flow of materials into the drum.

Mixed econocrete from the central mixing plant shall be transported in truck mixers, truck agitators, or nonagitating trucks. The time elapsing from the time water is added to the mix until the econocrete is deposited in place at the work site shall not exceed 45 minutes when the econocrete is hauled in nonagitating trucks nor 90 minutes when the econocrete is hauled in truck mixers or truck agitators. Retempering econocrete by adding water or by other means will not be permitted, except when econocrete is delivered in transit mixers. With transit mixers, additional water may be added to the batch materials and additional mixing performed to increase the slump to meet the specified requirements, if permitted by the Engineer. All these operations must be performed within 45 minutes after the initial mixing operations, and the water-cement ratio must not be exceeded. Admixtures for increasing the workability or for accelerating the set will be permitted only when approved by the Engineer. At the option of the Contractor or when specified by the Engineer, a water-reducing admixture may be used.

306-3.8 LIMITATIONS OF MIXING. No econocrete shall be mixed, placed, or finished when the natural light is insufficient, unless an adequate and approved artificial lighting system is operated.

Unless authorized in writing by the Engineer, mixing and econocreting operations shall be discontinued when a descending air temperature in the shade and away from artificial heat reaches 40° F (4° C) and shall not be resumed until an ascending air temperature in the shade and away from artificial heat reaches 35° F (2° C).

When econocreting is authorized during cold weather, the aggregates may be heated by either steam or dry heat prior to being placed in the mixer. The apparatus used shall heat the mass uniformly and shall be arranged to preclude the possible occurrence of overheated areas which might be detrimental to the materials. Unless otherwise authorized, the temperature of the mixed econocrete shall not be less than 50° F (10° C) at the time of placement in the forms.

If the air temperature is 35° F (2° C) or less at the time of placing econocrete, the Engineer may require the water and/or the aggregates to be heated to not less than 70° F (20° C) nor more than 150° F (66° C). Econocrete shall not be placed on frozen subgrade nor shall frozen aggregates be used in the econocrete.

During the periods of warm weather when the maximum daily air temperature exceeds 85° F (30° C), the following precautions should be taken. The forms and/or the underlying material shall be sprinkled with

water immediately before placing the econocrete. The econocrete shall be placed at the coolest temperature practicable, and in no case shall the temperature of the econocrete when placed exceed 100° F (38° C). The aggregates and/or mixing water shall be cooled as necessary to maintain the econocrete temperature at or not more than the specified maximum.

306-3.9 PLACING ECONOCRETE.

a. Side-Form Method. For the side-form method, the econocrete shall be deposited on the moistened grade to require as little rehandling as possible. Truck mixers, truck agitators, or nonagitating hauling equipment equipped with means for discharge of econocrete without segregation of the materials, shall unload the econocrete on the grade to prevent segregation of the materials. Placing shall be continuous between transverse joints without the use of intermediate bulkheads. Necessary hand spreading shall be done with shovels—not rakes. Workers shall not be allowed to walk in the freshly mixed econocrete with boots or shoes coated with earth or foreign substances.

b. Slip-Form Method. For the slip-form method, the econocrete shall be placed with an approved crawler-mounted, slip-form paver designed to spread, consolidate, and shape the freshly placed econocrete in one complete pass of the machine so that a minimum of hand finishing will be necessary to provide a pavement in conformance with requirements of the plans and specifications. Side forms and finishing screeds shall be adjustable to the extent required to produce the specified pavement edge and surface tolerance. The side forms shall be of dimensions, shape and strength to support the econocrete laterally for a sufficient length of time so that no appreciable edge slumping will occur. Final finishing shall be accomplished while the econocrete is still in the plastic state.

306-3.10 FIELD TEST SPECIMENS. Econocrete samples shall be furnished by the Contractor and shall be taken in the field to determine the consistency, air content, and strength of the econocrete. The samples shall be taken in the presence of the Engineer, at locations determined by the Engineer. Econocrete cylinders shall be made each day that the econocrete is placed. Each group of cylinders shall be molded from the same batch of econocrete and shall consist of a sufficient number of specimens to provide two compressive strength tests at each test age. One group of specimens will be made during the first half of each shift, and the other will be made during the last portion of the shift. The specimens shall be made in accordance with ASTM C 31. However, at the start of paving operations and when the aggregate source, aggregate characteristics, or mix design is changed, additional groups of test cylinders may be required until the Engineer is satisfied that the econocrete mixture being used complies with the strength requirements of these specifications. Test ages will be 7 days and 28 days.

* *

At least one set of cylinders should be made for each 500 cubic yards (380 cubic meters) or fraction thereof of econocrete placed.

* *

Since the strength level of econocrete at an early age is considerably lower than pavement concrete, special care is required in handling test specimens. Cylinders should be field cured 48 hours prior to moving.

The compressive strength of the econocrete shall meet the following requirements: (1) the average of any 4 consecutive strength tests, tested at the end of 28 days, shall have an average compressive strength equal to or greater than the specified compressive strength; (2) not more than 20 percent of the cylinders tested at the end of 28 days shall have a compressive strength less than the specified strength. Specimens which are obviously defective shall not be considered in the determination of the strength. When it appears that the test specimens will fail to conform to the requirements for strength, the Engineer shall have the right to order changes in the econocrete sufficient to increase the strength to meet these requirements. When a satisfactory relationship between 7-day and 28-day strengths has been established and approved, the 7-day test results may be used as an indication of the 28-day strengths. However, the 7-day test results will not replace the results of the 28-day tests if the 28-day results fall below the requirements. Econocrete not meeting these requirements shall be replaced at the Contractor's expense.

306-3.11 JOINTS. Transverse joints shall be constructed every 50 feet (15 m). Joints shall be **[sawed in the hardened econocrete]** **[formed in the plastic mixture]** to depth of at least one-sixth the thickness of the

econocrete base. All joints in the econocrete base shall be offset at least 6 inches (150 mm) from joints in the surface course.

* *

Joints are not considered necessary in econocrete subbases because of the normally lower strengths and moduli of elasticity of these subbases relative to these parameters in the overlying portland cement concrete pavement. When a relatively high strength econocrete subbase is placed (compressive strength greater than 1200 psi), joints should be constructed, unless a good bond breaker, such as a wax-based curing compound, is used between the econocrete and the overlying pavement.

Paragraph 3.11 should be deleted if the Engineer determines joints are not necessary.

* *

306-3.12 FINAL STRIKE-OFF, CONSOLIDATION, AND FINISHING.

a. Sequence. The sequence of operations shall be strike-off, consolidation, and finishing.

b. Strike-off, Consolidation, and Finishing. The econocrete shall be placed with a slip-form paver capable of striking-off, consolidating, and finishing in one pass of the equipment. Form-paving methods may be used at the Contractor's option.

c. Surface Testing and Corrections. After the econocrete base has been struck off and consolidated and while the econocrete is still plastic, it shall be tested for trueness with a 16-foot (4.8 m) straightedge. The surface shall show no variations of more than 3/8 inch (9 mm) from a 16-foot (4.8 m) straightedge laid in any location parallel with or at right angles to the longitudinal axis of the centerline. Any surplus material shall be removed and the surface refinished by hand. Any depressions shall be immediately filled with freshly mixed econocrete, struck off, consolidated, and refinished.

306-3.13 CURING. Immediately after the finishing operations have been complete and marring of the econocrete will not occur, the entire surface of the newly placed econocrete shall be cured in accordance with one of the methods below. Failure to provide sufficient cover material of whatever kind the Contractor may elect to use, or lack of water to adequately take care of both curing and other requirements, shall be cause for immediate suspension of econocreting operations. The econocrete shall not be left exposed for more than 1/2 hour during the curing period. The following are alternate approved methods for curing econocrete pavements.

a. Impervious Membrane Method. The entire surface of the pavement shall be sprayed uniformly with white pigmented curing compound immediately after the finishing of the surface and before the set of the econocrete has taken place. The curing compound shall not be applied during rainfall. Curing compound shall be applied by mechanical sprayers under pressure at the rate of 1 gallon (4 liters) to not more than 200 square feet (18 square meters). The spraying equipment shall be of the fully atomizing type equipped with a tank agitator. At the time of use, the compound shall be in a thoroughly mixed condition with pigment uniformly dispersed throughout the vehicle. During application, the compound shall be stirred continuously by effective mechanical means. Hand spraying of odd widths or shapes and concrete surfaces exposed by the removal of forms will be permitted. Curing compound shall not be applied to the inside faces of joints to be sealed, but approved means shall be used to ensure proper curing for 72 hours. The curing compound shall be of such character that the film will harden within 30 minutes after application. Should the film become damaged from any cause within the required curing period, the damaged portions shall be repaired immediately with additional compound. Upon removal of side forms, the sides of the exposed slabs shall be protected immediately to provide a curing treatment equal to that provided for the surface.

b. Asphalt Emulsion. The entire surface of the pavement shall be uniformly sprayed with asphalt emulsion before the set of the econocrete has taken place. The asphalt emulsion shall be applied by distributing equipment at the rate of approximately 0.2 gallons (0.95 liter) per square yard (square meter). Should the film become damaged from any cause within the required curing period, the damaged portions shall be repaired immediately with additional asphalt emulsion.

c. Curing in Cold Weather. When the average daily temperature is below 40° F (4° C), curing shall consist of covering the newly laid pavement with not less than 12 inches (300 mm) of loose, dry hay or straw, or equivalent protective curing authorized by the Engineer, which shall be retained in place for 10 days. The hay or straw shall be secured to avoid being blown away.

When econocrete is being placed and the air temperature may be expected to drop below 35° F (2° C), a sufficient supply of straw, hay, grass, or other suitable blanketing material such as burlap or polyethylene shall be provided along the work. Any time the temperature may be expected to reach the freezing point during the day or night, the material so provided shall be spread over the pavement to a sufficient depth to prevent freezing of the econocrete.

The period of time such protection shall be maintained shall not be less than 10 days. The Contractor shall be responsible for the quality and strength of the econocrete placed during cold weather, and any econocrete injured by frost action shall be removed and replaced at the Contractor's expense.

306-3.14 PROTECTION OF ECONOCRETE. The Contractor shall protect the pavement against traffic caused by the Contractor's employees and agents. This shall include watchmen to direct traffic and erection and maintenance of warning signs, lights, pavement bridges, or crossovers, etc. The plans or special provisions will indicate the location and type of device or facility required to protect the work and provide adequately for traffic. Any damage to the subbase course occurring prior to final acceptance shall be repaired or the pavement replaced at the Contractor's expense. In order that the econocrete be properly protected against the effects of rain before the econocrete is sufficiently hardened, the Contractor will be required to have available at all times materials for the protection of the edges and surfaces of the unhardened econocrete. Such protective materials shall consist of rolled polyethylene sheeting at least 4 mils (0.1 mm) thick of sufficient length and width to cover the plastic econocrete slab and any edges. The sheeting may be mounted on either the paver or a separate movable bridge from which it can be unrolled without dragging over the plastic econocrete surface. When rain appears imminent, all paving operations shall stop and all available personnel shall begin covering the surface of the unhardened econocrete with the protective covering.

Traffic shall not be permitted on the econocrete until a minimum compressive strength of 500 psi has been developed as determined from test specimens.

306-3.15 TOLERANCE IN THICKNESS. Econocrete will be accepted for thickness on a lot basis. A lot will consist of [ ] square yards (square meters). One core shall be taken at random by the Engineer in each lot. When the measurement of the core from a lot is not deficient more than 0.5 inch (12 mm) from the plan thickness, full payment will be made. When such measurement is deficient more than 0.5 inch (12 mm) and not more than 1 inch (25 mm) from the plan thickness, two additional cores shall be taken at random and used in determining the average thickness for that lot. The thickness of the cores shall be determined by average caliper measurement of cores tested in accordance with ASTM C 174. When the average measurement of the 3 cores is not deficient more than 0.5 inch (12 mm) from the plan thickness, full payment will be made. If the average measurement of the three cores is deficient more than 0.5 inch (12 mm) from the plan thickness, the entire lot shall be removed and replaced at the Contractor's expense or be permitted to remain in place at an adjusted payment of 75 percent of the contract unit price.

When the average thickness is deficient by more than 1 inch (25 mm), the entire lot shall be replaced.

* *

The Engineer shall specify the lot size. The lot should contain approximately 4000 square yards (3 350 square meters) but not exceed a day's pour.

* *

METHOD OF MEASUREMENT

306-4.1 The quantity to be paid for will be the number of square yards (square meters) of econocrete completed and accepted as measured complete in place, less deductions as required in paragraph 3.15 for deficient thickness.

BASIS OF PAYMENT

306-5.1 The accepted quantities of econocrete will be paid for at the contract unit price for square yard (square meter). The price and payment shall be full compensation for furnishing and placing all materials, provided, however, that for any pavement found deficient in thickness as specified in paragraph 3.15 the reduced unit price shall be paid.

Payment will be made under:

Item P-306.1	Econocrete Base Course--per square yard (per square meter)

TESTING REQUIREMENTS

ASTM C 31	Making and Curing Concrete Test Specimens in the Field
ASTM C 39	Compressive Strength of Cylindrical Concrete Specimens
ASTM C 136	Sieve or Screen Analysis of Fine and Course Aggregates
ASTM C 143	Slump of Portland Cement Concrete
ASTM C 173	Air Content of Freshly Mixed Concrete by the Volumetric Method
ASTM C 174	Measuring Length of Drilled Concrete Cores
ASTM C 192	Making and Curing Concrete Test Specimens in the Laboratory
ASTM C 231	Air Content of Freshly Mixed Concrete by the Pressure Method
AASHTO T 26	Quality of Water to be Used in Concrete

MATERIAL REQUIREMENTS

ASTM C 33	Specification for Concrete Aggregates
ASTM C 94	Specification for Ready-Mixed Concrete
ASTM C 150	Specification for Portland Cement
ASTM C 260	Specification for Air-Entraining Admixtures for Concrete
ASTM C 309	Specification for Liquid Membrane-Forming Compounds for Curing Concrete
ASTM C 494	Specification for Chemical Admixtures for Concrete
ASTM C 618	Specification for Fly Ash and Raw and Calcined Natural Pozzolans for Use in Portland Cement Concrete
ASTM C 977	Specification for Emulsified Asphalt

PART V—FLEXIBLE SURFACE COURSES

ITEM P-401 PLANT MIX BITUMINOUS PAVEMENTS

DESCRIPTION

401-1.1 This item shall consist of a [ ] course composed of mineral aggregate and bituminous material mixed in a central mixing plant and placed on a prepared course in accordance with these specifications and shall conform to the lines, grades, thicknesses, and typical cross sections shown on the plans. Each course shall be constructed to the depth, typical section, or elevation required by the plans and shall be rolled, finished, and approved before the placement of the next course.

* *

The Engineer shall specify surface or base course.

* *

MATERIALS

401-2.1 AGGREGATE. Aggregates shall consist of crushed stone, crushed gravel, or crushed slag with or without sand or other inert finely divided mineral aggregate. The portion of materials retained on the No. 8 sieve shall be known as coarse aggregate. The portion passing the No. 8 (2.36 mm) sieve and retained on the No. 200 (0.075 mm) sieve as fine aggregate, and the portion passing the No. 200 (0.075 mm) sieve as mineral filler.

a. Coarse Aggregate. Coarse aggregate shall consist of sound, tough, durable particles, free from adherent films of matter that would prevent thorough coating with the bituminous material. The percentage of wear shall not be greater than [ ] percent when tested in accordance with ASTM C 131. The sodium sulfate soundness loss shall not exceed [ ] percent, after five cycles, when tested in accordance with ASTM C 88.

* *

Percentage of wear shall not exceed 40 for surface course and 50 for base course; sodium sulfate loss should not exceed 9 percent. In certain specific cases, where aggregates complying with these maximums cannot economically be obtained, aggregates with a higher percentage loss or wear may be specified, provided a satisfactory service record under similar conditions of service and exposure shall have been demonstrated.

The sodium sulfate soundness test need only be performed on initial samples from sources where quality of the aggregates is unknown by reason of no prior use or lack of service behavior dates.

* *

Aggregate shall contain at least [ ] percent by weight of crushed pieces having two or more fractured faces and [ ] percent having at least one fractured face. The area of each face shall be equal to at least 75 percent of the smallest midsectional area of the piece. When two fractured faces are contiguous, the angle between the planes of fractures shall be at least 30 degrees to count as two fractured faces. Fractured faces shall be obtained by artificial crushing.

* *

For pavements designed for aircraft gross weights of 60,000 pounds (27 200 kg) or more the Engineer shall specify 70 percent for two fractured faces and 85 percent for one fractured face. For pavements designed for aircraft gross weights less than 60,000 pounds (27 200 kg) the Engineer shall specify 50 percent for two fractured faces and 65 percent for one fractured face.

* *

The aggregate shall not contain more than 8 percent, by weight, of flat or elongated pieces, a flat particle is one having a ratio of width to thickness greater than five; an elongated particle is one having a ratio of length to width greater than five.

Slag shall be air-cooled, blast furnace slag, and shall have a compacted weight of not less than 70 pounds per cubic foot (1.12 mg/cubic meter) when tested in accordance with ASTM C 29.

b. Fine Aggregate. Fine aggregate shall consist of clean, sound, durable, angular particles produced by crushing stone, slag, or gravel that meets the requirements for wear and soundness specified for coarse aggregate. The aggregate particles shall be free from coatings of clay, silt, or other objectionable matter and shall contain no clay balls. The fine aggregate, including any blended filler, shall have a plasticity index of not more than six and a liquid limit of not more than 25 when tested in accordance with ASTM D 4318.

Natural sand may be used to obtain the gradation of the aggregate blend or to improve the workability of the mix. The amount of sand to be added will be adjusted to produce mixtures conforming to requirements of this specification.

* *

The addition of natural sand to a mix containing coarse and fine aggregates of excessive angularity will normally increase its workability and compactability. However, the addition of excessive amounts of natural sand tends to decrease the stability of the mixture.

* *

c. Sampling and Testing. ASTM D 75 shall be used in sampling coarse and fine aggregate, and ASTM C 183 shall be used in sampling mineral filler. The Contractor shall furnish documentation to the Engineer confirming that the aggregates meet specification requirements.

d. Sources of Aggregates. Sources of aggregates shall be selected well in advance of the time the materials are required in the work. When the aggregates are obtained from a previously approved source or an existing source producing aggregates that has a satisfactory service record in airport bituminous pavement construction for at least 5 years, samples shall be submitted [ ] days prior to start of production. An inspection of the producer's operation will be made by the Engineer. When new sources are to be developed, the Contractor shall indicate the sources and shall submit a plan for operation [ ] days in advance of starting production. Samples from test pits, borings, and other excavations shall be submitted at the same time. Approval of the source of aggregate does not relieve the Contractor in any way of the responsibility for delivery at the job site of aggregates that meet the requirements specified herein.

* *

Recommended time periods are 14 days for previously approved aggregates and 30 days for new sources of aggregates, however the time periods chosen must allow sufficient time for shipping and testing.

* *

e. Samples of Aggregates. Samples of aggregates shall be furnished by the Contractor at the start of production and at intervals during production of bituminous mixtures. The sampling points and intervals will be designated by the Engineer. The samples will be the basis of approval of specific lots of aggregates from the standpoint of the quality requirements of this section.

401-2.2 FILLER. If filler, in addition to that naturally present in the aggregate, is necessary, it shall meet the requirements of ASTM D 242.

401-2.3 BITUMINOUS MATERIAL. Bituminous material shall conform to the following requirements: [ ].

* *

The Engineer shall specify the type and grade of bituminous material, based on geographical location and climatic conditions, as well as the controlling specification. Types of materials are listed below.

Type and Grade Asphalt Cement		Specification
Penetration Grade	60-70 85-100 100-120	ASTM D 946
Viscosity Grade	AC-5 AC-10 AC-30 AC-40	ASTM D 3381
Viscosity Grade	AR-1000 AR-2000 AR-4000 AR-8000	ASTM D 3381
Tar	RT-10 RT-11 RT-12	ASTM D 490

* *

The Contractor shall furnish vendor's certified test reports for each tankload of bitumen shipped to the project. The report shall be delivered to the Engineer before permission is granted for use of the material. The furnishing of the vendor's certified test report for the bituminous material shall be the basis for final acceptance.

COMPOSITION

401-3.1 COMPOSITION OF MIXTURE. The bituminous plant mix shall be composed of a mixture of aggregate, filler if required, and bituminous material. The several aggregate fractions shall be sized, uniformly graded, and combined in such proportions that the resulting mixture meets the grading requirements of the job mix formula.

401-3.2 JOB MIX FORMULA. No bituminous mixture for payment shall be produced until a job mix formula has been approved by the Engineer. The formula shall be submitted in writing by the Contractor to the Engineer at least [ ] days prior to the start of paving operations and shall indicate the definite percentage of each sieve fraction of aggregate, the percentage of bitumen, and the temperature of the completed mixture when discharged from the mixer. All test data used to develop the job mix formula shall also be submitted. The job mix formula for each mixture shall be in effect until modified in writing by the Engineer. Should a change in sources of materials be made, a new job mix formula must be established before the new material is used.

* *

The Engineer shall specify the number of days. A minimum of 10 days is recommended.

* *

The bituminous mixture shall be designed using procedures contained in Chapter III, MARSHALL METHOD OF MIX DESIGN, of the Asphalt Institute's Manual Series No. 2 (MS-2), current edition, and shall meet the requirements of Tables 1 and 2.

* *

The Marshall Design Criteria applicable to a project shall be specified by the Engineer from the information shown below and inserted into Table 1. Asterisks denote insert points.

Test Property	**Pavements Designed for Aircraft Gross Weights of 60,000 lbs. or more or Tire Pressure Greater than 100 psi**	**Pavements Designed for Aircraft Gross Weights Less than 60,000 lbs. or Tire Pressure Less than 100 psi**
Number of Blows	**75**	**50**
Stability, pounds (newtons) minimum	**1800 (8000)**	**1000 (4450)**
Flow, 0.01 in. (0.25 mm)	**8-16**	**8-20**
Percent air voids		
Surface	**3-5**	**3-5**
Base	**3-5**	**3-5**
Percent voids in mineral aggregate	**See Table 2**	**See Table 2**

* *

TABLE 1. MARSHALL DESIGN CRITERIA

TEST PROPERTY	*
Number of Blows	*
Stability, Minimum pounds (newtons)	*
Flow, 0.01 in. (0.25 mm)	*
Percent air voids	*
Percent voids in mineral aggregate	See Table 2

TABLE 2. MINIMUM PERCENT VOIDS IN MINERAL AGGREGATE

Maximum Particle Size (Table 3)		Minimum Voids in Mineral Aggregate
in.	mm	Percent
½	12.5	16
¾	19.0	15
1	25.0	14
1¼	31.25	13

The mineral aggregate shall be of such size that the percentage composition by weight, as determined by laboratory screens, will conform to the gradation or gradations specified in Table 3 when tested in accordance with ASTM Standard C 136 and C 117. The percentage by weight for the bituminous material shall be within the limits specified.

The gradations in Table 3 represent the limits which shall determine the suitability of aggregate for use from the sources of supply. The aggregate, as finally selected, shall have a gradation within the limits designated in Table 3 and shall not vary from the low limit on one sieve to the high limit on the adjacent sieve, or vice versa, but shall be uniformly graded from coarse to fine.

TABLE 3. AGGREGATE - BITUMINOUS PAVEMENTS

Sieve Size	Percentage by Weight Passing Sieves
	*
1¼ in. (31.25 mm)	*
1 in. (25.0 mm)	*
¾ in. (19.0 mm)	*
½ in. (12.5 mm)	*
⅜ in. (9.5 mm)	*
No. 4 (4.75 mm)	*
No. 8 (2.36 mm)	*
No. 16 (1.18 mm)	*
No. 30 (0.60 mm)	*
No. 50 (0.30 mm)	*
No. 100 (0.15 mm)	*
No. 200 (0.075 mm)	*
Bitumen percent	
Stone or gravel	*
Slag	*

* *

The aggregate gradation band(s) applicable to a project shall be specified by the Engineer from the gradations shown in this note. The gradation shall be inserted into Table 3. Asterisks denote insert points.

The selection of any of the gradations shall be such that the maximum size aggregate used shall not be more than one-half of the thickness of the course being constructed.

Where locally-available aggregates cannot be economically blended to meet the grading requirements of the gradations shown, the gradations may be modified to fit the characteristics of such local aggregates. The modified gradation must produce a paving mixture that satisfies the mix design requirements.

The aggregate gradations shown are based on aggregates of uniform specific gravity, and the percentages passing the various sieves will be subject to appropriate correction by the Engineer when aggregates of varying specific gravities are used. See the Asphalt Institute Manual Series No. 2 (MS-2), Appendix A.

AGGREGATE—BITUMINOUS PAVEMENTS

Sieve Size	Percentage by Weight Passing Sieves			
	1¼"max	1" max	¾" max	½" max
1¼ in. (30.0 mm)	100	—	—	—
1 in. (24.0 mm)	86–98	100	—	—
¾ in. (19.0 mm)	68–93	76–100	100	—
½ in. (12.5 mm)	57–81	66–86	79–99	100
⅜ in. (9.5 mm)	49–69	57–77	68–88	79–99
No. 4 (4.75 mm)	34–54	40–60	48–68	58–78
No. 8 (2.36 mm)	22–42	26–46	33–53	39–59
No. 16 (1.18 mm)	13–33	17–37	20–40	26–46
No. 30 (0.600 mm)	8–24	11–27	14–30	19–35
No. 50 (0.300 mm)	6–18	7–19	9–21	12–24
No. 100 (0.150 mm)	4–12	6–16	6–16	7–17
No. 200 (0.075 mm)	3–6	3–6	3–6	3–6
Bitumen percent:				
Stone or gravel	4.5–7.0	4.5–7.0	5.0–7.5	5.5–8.0
Slag	5.0–7.5	5.0–9.0	6.5–9.5	7.0–10.5

* *

The job mix tolerances shown in Table 4 shall be applied to the job mix formula to establish a job control grading band. The full tolerances still will apply if application of the job mix tolerances results in a job control grading band outside the master grading band.

TABLE 4. JOB MIX FORMULA TOLERANCES

(Based on a Single Test)

Material	Tolerance – plus or minus
Aggregate passing No. 4 sieve or larger	7 percent
Aggregate passing Nos. 8 and 16 sieves	6 percent
Aggregate Passing Nos. 30 and 50 sieves	5 percent
Aggregate Passing Nos. 100 and 200 sieves	3 percent
Bitumen	0.45 percent
Temperature of mix	20° F (11° C)

The aggregate gradation may be adjusted within the limits of Table 3 as directed, without adjustments in the contract unit prices.

Deviation from the final approved design for bitumen content and gradation of aggregates shall not be greater than the tolerances permitted and shall be based on daily plant extraction. Extraction tests for bitumen content and aggregate gradation will be made at least twice daily. The mixture will be tested for bitumen content in accordance with ASTM D 2172 and for aggregate gradation in accordance with AASHTO T 30.

The completed mixture shall be sampled at the plant to retain job control. One sample shall be taken from each sublot on a random basis, in accordance with procedures contained in ASTM D 3665. A lot shall consist of [ ] tons and shall be divided into 4 sublots. Testing shall be in accordance with the Marshall Method procedures contained in Chapter III of the Asphalt Institute Manual Series No. 2 (MS-2), current edition. If any two consecutive Marshall test results of any property do not conform to the requirements shown in Tables 1 and 2, the Contractor shall take immediate corrective action. In no instance shall the percent air voids exceed ± 1 percent of the job mix formula value.

The Engineer may halt production if the Marshall test criteria are not met and not allow it to resume until the problem is corrected.

If the index of retained strength of the specimens of composite mixture, as determined by ASTM D 1075, is less than 75, the aggregates shall be rejected or the asphalt shall be treated with an antistripping agent. The amount of antistripping agent added to the asphalt shall be sufficient to produce an index of retained strength of not less than 75.

* *

For airport pavements designed to accommodate aircraft gross weights of 12,500 pounds (5 662 kg) or less, this section may be modified to permit the use of state highway department specifications for high-quality, hot-mix bituminous pavements that have a satisfactory performance record under equivalent loadings and exposure, including design criteria, gradations, and density requirements. The Engineer may wish to specify stability, percent air voids, and density values when not required by state specifications.

Mixes designed with stabilities greater than 2,500 pounds (1 125 kg) may result in mixtures difficult to compact to the required density.

The lot size shall be consistent with that specified in paragraph 401-4.12a.

* *

401-3.3 TEST SECTION. Prior to full production, the Contractor shall prepare a quantity of bituminous mixture according to the job mix formula. the amount of mixture should be sufficient to construct a test section [ ] long and [ ] wide placed in two sections and shall be of the same depth specified for the construction of the course which it represents. The underlying grade or pavement structure upon which the test section is to be constructed shall be the same as the remainder of the course represented by the test section. The equipment used in construction of the test section shall be the same type and weight to be used on the remainder of the course represented by the test section.

If the test section should prove to be unsatisfactory, the necessary adjustments to the mix design, plant operation, and/or rolling procedures shall be made. Additional test sections, as required, shall be constructed and evaluated for conformance to the specifications. When test sections do not conform to specification requirements, the pavement shall be removed and replaced at the Contractor's expense. A marginal quality test section that has been placed in an area of little or no traffic may be left in place. If a second test section also does not meet specification requirements both sections shall be removed at the Contractor's expense. Full production shall not begin without the Engineer's approval. Test sections will be paid for in accordance with paragraph 6.1.

* *

The test section should be a minimum of 50 feet (15 m) long and 20 feet (6 m) wide. The test section affords the Contractor and the Engineer an opportunity to determine the quality of the mixture in place, as well as performance of the plant and laydown equipment. Wherever

possible, the test section should be placed in an area where it will receive little or no traffic so that marginal quality trial runs can be safely left in place.

Job mix control testing is performed at the start of plant production and in conjunction with the calibration of the plant for the job mix formula. It should be recognized that the aggregates produced by the plant may not satisfy the gradation requirements or produce a mix that meets the design requirements of the specification. In those instances, it will be necessary to reevaluate and redesign the mix using plant-produced aggregates. Specimens should be prepared and the optimum bitumen content determined in the same manner as for the original design tests.

Until the plant is producing the desired mix consistently, a large number of tests may be necessary. Once the plant has been placed in continuous operation the number of tests shall be reduced to the number specified in paragraph 401-3.2.

* *

401-3.4 TESTING LABORATORY. The testing laboratory used to develop the job mix formula and to perform the tests required by this specification shall meet the requirements of ASTM D 3666. A certification that the laboratory meets these requirements shall be submitted to the Engineer. An approved testing laboratory will not be required for quality control tests made by the Contractor.

CONSTRUCTION METHODS

401-4.1 WEATHER LIMITATIONS. The bituminous mixture shall not be placed upon a wet surface or when the surface temperature of the underlying course is less than specified in Table 5. The temperature requirements may be waived, but only at the discretion of the Engineer.

TABLE 5. BASE TEMPERATURE LIMITATIONS

Mat Thickness	Base Temperature (Minimum) Deg. F	Deg. C
3 in. (7.5 cm) or greater	40	4
Greater than 1 in. (2.5 cm) but less than 3 in. (7.5 cm)	45	7
1 in. (2.5 cm) or less	50	10

401-4.2 BITUMINOUS MIXING PLANT. Plants used for the preparation of bituminous mixtures shall conform to the requirements of ASTM D 995 with the following changes:.

a. Requirements for All Plants.

(1) Truck Scales. The bituminous mixture shall be weighed on approved scales furnished by the Contractor, or on public scales at the Contractor's expense. Such scales shall be inspected and sealed as often as the Engineer deems necessary to assure their accuracy. Scales shall conform to the requirements of Section 90.

(2) Testing Laboratory. The Contractor or producer shall provide laboratory facilities for control and acceptance testing functions during periods of mix production, sampling, and testing and whenever materials subject to the provisions of these specifications are being supplied or tested. The laboratory shall provide adequate equipment, space, and utilities as required for the performance of the specified tests.

(3) Inspection of Plant. The Engineer, or his/her authorized representative, shall have access, at all times, to all parts of the plant for checking adequacy of equipment; inspecting operation of the plant: verify-

ing weights, proportions, and character of materials; and checking the temperatures maintained in the preparation of the mixtures.

(4) Storage Bins and Surge Bins. Paragraph 3.9 of ASTM D 995 is deleted. Instead, the following applies. Use of surge bins or storage bins for temporary storage of hot bituminous mixtures will be permitted as follows:

(a) The bituminous mixture may be stored in surge bins for period of time not to exceed 3 hours,

(b) The bituminous mixture may be stored in insulated storage bins for a period of time not to exceed 24 hours, provided an inert gas atmosphere is maintained in the bin during the storage period.

The bins shall be such that mix drawn from them meets the same requirements as mix loaded directly into trucks.

If the Engineer determines that there is an excessive amount of heat loss, segregation or oxidation of the mixture due to temporary storage, no overnight storage will be allowed.

401-4.3 HAULING EQUIPMENT. Trucks used for hauling bituminous mixtures shall have tight, clean, and smooth metal beds. To prevent the mixture from adhering to them, the truck beds shall be lightly coated with a minimum amount of paraffin oil, lime solution, or other approved material. Each truck shall have a suitable cover to protect the mixture from adverse weather. When necessary, to ensure that the mixture will be delivered to the site at the specified temperature, truck beds shall be insulated and covers shall be securely fastened.

401-4.4 BITUMINOUS PAVERS. Bituminous pavers shall be self-contained, power-propelled units with an activated screed or strike-off assembly, heated if necessary, and shall be capable spreading and finishing courses of bituminous plant mix material which will meet the specified thickness, smoothness, and grade. Pavers used for shoulders and similar construction shall be capable of spreading and finishing courses of bituminous plant mix material in widths shown on the plans.

The paver shall have a receiving hopper of sufficient capacity to permit a uniform spreading operation. The hopper shall be equipped with a distribution system to place the mixture uniformly in front of the screed. The screed or strike-off assembly shall effectively produce a finished surface of the required evenness and texture without tearing, shoving, or gouging the mixture.

The paver shall be capable of operating at forward speeds consistent with satisfactory laying of the mixture.

If an automatic grade control device is used, the paver shall be equipped with a control system capable of automatically maintaining the specified screed elevation. The control system shall be automatically actuated from either a reference line or surface through a system of mechanical sensors or sensor-directed mechanisms or devices which will maintain the paver screed at a predetermined transverse slope and at the proper elevation to obtain the required surface. The transverse slope controller shall be capable of maintaining the screed at the desired slope within plus or minus 0.1 percent.

The controls shall be capable of working in conjunction with any of the following attachments:

a. Ski-type device of not less than 30 feet (9.14 m) in length or as directed by the Engineer.

b. Taut stringline (wire) set to grade.

c. Short ski or shoe.

* *

For pavements serving aircraft over 60,000 pounds (27 200 kg) gross weight, it is recommended that the specifications require the use of automatic grade controls.

* *

401-4.5 ROLLERS. Rollers of the vibratory, steel wheel, or pneumatic-tired type may be used. They shall be in good condition, capable of operating at slow speeds to avoid displacement of the bituminous mixture. The number, type, and weight of rollers shall be sufficient to compact the mixture to the required density while it is still in a workable condition.

The use of equipment which causes excessive crushing of the aggregate will not be permitted.

401-4.6 PREPARATION OF BITUMINOUS MATERIAL. The bituminous material shall be heated in a manner that will avoid local overheating and provide a continuous supply of the bituminous material to the mixer at a uniform temperature. The temperature of the bituminous material delivered to the mixer shall be sufficient to provide a suitable viscosity for adequate coating of the aggregate particles but shall not exceed 325° F (160° C).

401-4.7 PREPARATION OF MINERAL AGGREGATE. The aggregate for the mixture shall be dried and heated to the temperature designated by the job formula within the job tolerance specified. The maximum temperature and rate of heating shall be such that no permanent damage occurs to the aggregates. Particular care shall be taken that aggregates high in calcium or magnesium content are not damaged by overheating. The temperature shall not be lower than is required to obtain complete coating and uniform distribution on the aggregate particles and to provide a mixture of satisfactory workability.

401-4.8 PREPARATION OF BITUMINOUS MIXTURE. The aggregates and the bituminous material shall be weighed or metered and introduced into the mixer in the amount specified by the job mix formula.

The combined materials shall be mixed until the aggregate obtains a uniform coating of bitumen and is thoroughly distributed throughout the mixture. Wet mixing time shall be the shortest time that will produce a satisfactory mixture. It shall be established by the Contractor, based on the procedure for determining the percentage of coated particles described in ASTM D 2489, and approved by the Engineer for each individual plant and for each type of aggregate used. The minimum mixing time shall be 25 seconds. The mixing time will be set to achieve 95 percent of coated particles. For continuous mix plants, the minimum mixing time shall be determined by dividing the weight of its contents at operating level by the weight of the mixture delivered per second by the mixer. The moisture content of the mix shall not exceed 1.0 percent.

* *

For batch plants, wet mixing time begins with the introduction of bituminous material into the mixer and ends with the opening of the mixer discharge gate. Distribution of aggregate and bituminous material as they enter the pugmill, speed of mixer shafts, and arrangement and pitch of paddles are factors governing efficiency of mixing. Prolonged exposure to air and heat in the pugmill harden the asphalt film on the aggregate. Mixing time, therefore, should be the shortest time required to obtain uniform distribution of aggregate sizes and thorough coating of aggregate particles with bituminous material.

* *

401-4.9 TRANSPORTING, SPREADING, AND FINISHING. The mixture shall be transported from the mixing plant to the point of use in vehicles conforming to the requirements of Section 401-4.3. Deliveries shall be scheduled so that spreading and rolling of all mixture prepared for one day's run can be completed during daylight, unless adequate artificial lighting is provided. Hauling over freshly placed material shall not be permitted until the material has been compacted, as specified, and allowed to cool to atmospheric temperature.

Immediately before placing the bituminous mixture, the underlying course shall be cleared of all debris with power blowers, power brooms, or hand brooms as directed.

The mix shall be placed at a temperature of not less than 250° F (107° C) when asphalt cement is used, and not less than 150° F (65° C) when tar is used.

Upon arrival, the mixture shall be spread to the full width by an approved bituminous paver. It shall be struck off in a uniform layer of such depth that, when the work is completed, it shall have the required thickness and conform to the grade and contour indicated. The speed of the paver shall be regulated to eliminate pulling and tearing of the bituminous mat. Unless otherwise directed, placement of the mixture shall begin along the centerline of a crowned section or on the high side of areas with a one-way slope. The mixture shall be placed in consecutive adjacent strips having a minimum width of [ ] except where edge lanes require less width to complete the area. The longitudinal joint in one layer shall offset that in the layer immediately below by at least 1 foot (30 cm); however, the joint in the top layer shall be at the center-

line of the pavement. Transverse joints in one layer shall be offset by at least 2 feet (60 cm) from transverse joints in the previous layer. Transverse joints in adjacent lanes shall be offset a minimum of 10 feet (3 m).

On areas where irregularities or unavoidable obstacles make the use of mechanical spreading and finishing equipment impractical, the mixture may be spread, raked, and luted by hand tools.

* *

The Engineer should specify the widest paving lane practicable in an effort to hold the number of longitudinal joints to a minimum.

* *

401-4.10 COMPACTION OF MIXTURE. After spreading, the mixture shall be thoroughly and uniformly compacted by rolling. The surface shall be rolled when the mixture has attained sufficient stability so that the rolling does not cause undue displacement, cracking or shoving. The sequence of rolling operations and the type of rollers used shall be at the discretion of the Contractor.

The speed of the roller shall, at all times, be sufficiently slow to avoid displacement of the hot mixture. Any displacement occurring as a result of reversing the direction of the roller, or from any other cause, shall be corrected at once.

Sufficient rollers shall be furnished to handle the output of the plant. Rolling shall continue until all roller marks are eliminated, the surface is of uniform texture and true to grade and cross section, and the required field density is obtained.

To prevent adhesion of the mixture to the roller, the wheels shall be kept properly moistened, but excessive water will not be permitted.

In areas not accessible to the roller, the mixture shall be thoroughly compacted with hot hand tampers.

Any mixture that becomes loose and broken, mixed with dirt, or in any way defective shall be removed and replaced with fresh hot mixture and immediately compacted to conform to the surrounding area. This work shall be done at the Contractor's expense. Skin patching shall not be allowed.

401-4.11 JOINTS. The formation of all joints shall be made in such a manner as to ensure a continuous bond between old and new sections of the course. All joints shall have the same texture, density, and smoothness as other sections of the course.

The roller shall not pass over the unprotected end of the freshly laid mixture except when necessary to form a transverse joint. When necessary to form a transverse joint, it shall be made by means of placing a bulkhead or by tapering the course, in which case the edge shall be cut back to its full depth and width on a straight line to expose a vertical face. In both methods all contact surfaces shall be given a tack coat of bituminous material before placing any fresh mixture against the joint.

Longitudinal joints which are irregular, damaged, or other defective shall be cut back to expose a clean, sound surface for the full depth of the course. All contact surfaces shall be given a tack coat of bituminous material prior to placing any fresh mixture against the joint.

401-4.12 ACCEPTANCE SAMPLING AND TESTING OF BITUMINOUS MIXTURE (DENSITY). Pavement density will be determined by comparing the density of cores taken from the compacted pavement to the density of laboratory-compacted specimens.

a. Lot Sizes. The pavement will be accepted for density on a lot basis. A lot will consist of:

(1) One day's production where it is not expected to exceed 2,000 tons (1 814 000 kg).

(2) A half day's production where a days production is expected to consist of between 2,000 and 4,000 tons (1 814 000 and 3 628 000 kg).

(3) Similar subdivisions for quantities greater than 4,000 tons (3 628 000 kg).

b. Laboratory Density. Bituminous mixture for laboratory-compacted specimens shall be sampled on a lot basis from trucks delivering material to the job site. The lot size shall be the same as indicated in paragraph 401-4.12a and shall be divided into four equal sublots. One sample shall be taken from each sublot

on a random basis, in accordance with procedures contained in ASTM D 3665. One laboratory compacted specimen shall be prepared from each sublot.

The specimens shall be compacted in accordance with ASTM D 1559, Section 3.5. The sample of bituminous mixture may be put in a covered metal tin and placed in an oven for not more than 30 minutes to maintain the heat. In no instance shall the mixture cool more than 20° F (12° C) below the job-mix temperature prior to compaction. The density of each specimen shall be determined in accordance with ASTM D 2726 or D 1188, whichever is applicable.

c. Core Density. Cores for determining the density of the compacted pavement shall be taken on a lot basis. The lot size shall be the same as indicated in paragraph 401-4.12a and shall be divided into four equal sublots. One core shall be taken from each sublot on a random basis in accordance with procedures contained in ASTM D 3665. The cores shall be taken in accordance with the requirements of paragraph 401-4.13. The density of each core shall be determined in accordance with ASTM D 2726 or D 1188, whichever is applicable.

d. Partial Lots - Plant Produced Material. If operational conditions cause a lot to be terminated before the specified four tests have been made for the lot, the following procedure will be used to adjust the lot size and the number of tests for the lot:

Where three sublots have been produced, they shall constitute a lot. Where one or two sublots have been produced, they shall be incorporated into the next lot or the previous lot and the total number of sublots shall be used in the acceptance criteria calculation, i.e., $n=5$ or $n=6$.

e. Partial Lots - Compacted Pavement. The lot size for the compacted pavement shall correspond to that of the plant produced material.

f. Pavement Density. The pavement density shall be determined by dividing the core density of each sublot by the average density of the laboratory-prepared specimens.

g. Acceptance Criteria. Acceptance of each lot of in-place pavement shall be based on the percentage of material within specification limits (PWL). The PWL acceptance plan considers the variability (standard deviation) of the material and the testing procedures, as well as the mean value of the densities. In this plan, producing at a target density of 98 percent and a standard deviation of 1.3 percent will result in a PWL of 90 and 100 percent payment. If a material of greater variability is produced, then a higher target density must be maintained in order to achieve a PWL of 90 or more. The PWL is determined using standard statistical techniques and involves the average of the pavement densities (X) as determined under paragraph 401-4.12(f), the standard deviation of the pavement densities (S_n), the lower specification limit (L) and the Quality Index (Q). The Quality Index is calculated from the following formula:

$$Q = \frac{X-L}{S_n}$$

Where: Q = Quality Index
X = average of pavement densities in the lot
L = lower specification limit=96.3 percent
S_n = standard deviation of the number of samples in the lot

The standard deviation is calculated by use of the following formula:

$$S_n = \sqrt{\frac{d_1^2 + d_2^2 + d_3^2 + \ldots d_n^2}{n-1}}$$

Where:

d_1, d_2 = deviations of the individual sample values $X_1, X_2 \ldots\ldots$ from the average value X

that is $d_1 = (X_1 - X), d_2 = (X_2 - X). .d_n = (X_n - X)$

n = number of samples or measurements

A calculator which performs this function may also be used.

The PWL shall be determined from Table 6, using the appropriate number of tests (n) and the Quality Index (Q).

Each lot of bituminous mix shall be accepted for density when the PWL equals or exceeds 90 percent. Each lot not meeting the 90 percent PWL requirement will be accepted at an adjusted contract unit price in accordance with Table 7.

TABLE 6. TABLE FOR ESTIMATING PERCENT OF LOT WITHIN LIMITS (PWL)

Percent Within Limits	Positive Values of Q					
	n=3	n=4	n=5	n=6	n=7	n=8
99	1.1541	1.4700	1.6714	1.8008	1.8888	1.9520
98	1.1524	1.4400	1.6016	1.6982	1.7612	1.8053
97	1.1496	1.4100	1.5427	1.6181	1.6661	1.6993
96	1.1456	1.3800	1.4897	1.5497	1.5871	1.6127
95	1.1405	1.3500	1.4407	1.4887	1.5181	1.5381
94	1.1342	1.3200	1.3946	1.4329	1.4561	1.4716
93	1.1269	1.2900	1.3508	1.3810	1.3991	1.4112
92	1.1184	1.2600	1.3088	1.3323	1.3461	1.3554
91	1.1089	1.2300	1.2683	1.2860	1.2964	1.3032
90	1.0982	1.2000	1.2290	1.2419	1.2492	1.2541
89	1.0864	1.1700	1.1909	1.1995	1.2043	1.2075
88	1.0736	1.1400	1.1537	1.1587	1.1613	1.1630
87	1.0597	1.1100	1.1173	1.1191	1.1199	1.1204
86	1.0448	1.0800	1.0817	1.0808	1.0800	1.0794
85	1.0288	1.0500	1.0467	1.0435	1.0413	1.0399
84	1.0119	1.0200	1.0124	1.0071	1.0037	1.0015
83	0.9939	0.9900	0.9785	0.9715	0.9672	0.9643
82	0.9749	0.9600	0.9452	0.9367	0.9325	0.9281
81	0.9550	0.9300	0.9123	0.9025	0.8966	0.8928
80	0.9342	0.9000	0.8799	0.8690	0.8625	0.8583
79	0.9124	0.8700	0.8478	0.8360	0.8291	0.8245
78	0.8897	0.8400	0.8160	0.8036	0.7962	0.7915
77	0.8662	0.8100	0.7846	0.7716	0.7640	0.7590
76	0.8417	0.7800	0.7535	0.7401	0.7322	0.7271
75	0.8165	0.7500	0.7226	0.7089	0.7009	0.6958
74	0.7904	0.7200	0.6921	0.6781	0.6701	0.6649
73	0.7636	0.6900	0.6617	0.6477	0.6396	0.6344
72	0.7360	0.6600	0.6316	0.6176	0.6095	0.6044
71	0.7077	0.6300	0.6016	0.5878	0.5798	0.5747
70	0.6787	0.6000	0.5719	0.5583	0.5504	0.5454
69	0.6490	0.5700	0.5423	0.5290	0.5213	0.5164
68	0.6187	0.5400	0.5129	0.4999	0.4924	0.4877
67	0.5878	0.5100	0.4836	0.4710	0.4638	0.4592
66	0.5563	0.4800	0.4545	0.4424	0.4354	0.4310
65	0.5242	0.4500	0.4255	0.4139	0.4073	0.4031
64	0.4916	0.4200	0.3967	0.3856	0.3793	0.3753
63	0.4586	0.3900	0.3679	0.3575	0.3515	0.3477
62	0.4251	0.3600	0.3392	0.3295	0.3239	0.3203
61	0.3911	0.3300	0.3107	0.3016	0.2964	0.2931
60	0.3568	0.3000	0.2822	0.2738	0.2691	0.2660
59	0.3222	0.2700	0.2537	0.2461	0.2418	0.2391
58	0.2872	0.2400	0.2254	0.2186	0.2147	0.2122
57	0.2519	0.2100	0.1971	0.1911	0.1877	0.2122
56	0.2164	0.1800	0.1688	0.1636	0.1877	0.1855
55	0.1806	0.1500	0.1408	0.1363	0.1338	0.1322
54	0.1447	0.1200	0.1125	0.1090	0.1070	0.1057

TABLE 6. TABLE FOR ESTIMATING PERCENT OF LOT WITHIN LIMITS (PWL)—Continued

Percent Within Limits	Positive Values of Q					
	n=3	n=4	n=5	n=6	n=7	n=8
53	0.1087	0.0900	0.0843	0.0817	0.0802	0.0792
52	0.0725	0.0600	0.0562	0.0544	0.0534	0.0528
51	0.0363	0.0300	0.0281	0.0272	0.0267	0.0264
50	0.0	0.0	0.0	0.0	0.0	0.0

TABLE 7. PRICE ADJUSTMENT SCHEDULE

Percentage of Material Above the Specification Limit (PWL)	Percent of Contract Unit Price to be Paid
90–100	100
80–90	0.5 PWL + 55.0
65–80	2.0 PWL – 65.0
Below 65	[1]

[1] The lot shall be removed and replaced. However, the Engineer may decide to accept the deficient lot. In that case, if the Engineer and Contractor agree in writing, that lot shall not be removed, and it will be paid for at 50 percent of the contract price.

* *

A lot is the quantity of material to be controlled and may represent a specified tonnage or a specified number of truckloads. The lot size, to be determined by the Engineer, should, for the most part, depend on the operational capacity of the plant, but shall in no case exceed 2,000 tons (1 814 360 kg).

* *

401–4.13 SAMPLING PAVEMENT. Core samples for determination of the density of completed pavements shall be obtained by the Contractor at no extra cost. The size, number, and locations of the samples will be as directed by the Engineer. Samples shall be neatly cut with a saw, core drill, or other approved equipment. Cores that are clearly defective shall be resampled. The Contractor shall furnish all tools, labor, and materials for cutting samples and replacing pavement.

All tests necessary to determine conformance with requirements specified in this item will be performed by the Engineer without cost to the Contractor.

a. Resampling. Resampling of the pavement for density will be allowed if the Contractor requests, in writing, resampling and retesting of a lot of material within 48 hours after receiving the written test results from the Engineer. A retest shall consist of all the sampling and testing procedures contained in paragraphs 401–4.12c, f, and g. Only one resampling per lot will be permitted.

(1) A Redefined PWL shall be calculated for the resampled lot. The number of tests used to calculate the Redefined PWL shall include the initial tests made for that lot plus the retests.

(2) If the Redefined PWL results in a PWL greater than the original lot and a payment of 100 percent, the cost of resampling and retesting shall be borne by the Engineer. If payment of less than 100 percent results, the costs shall be borne by the Contractor.

(3) If the Redefined PWL for a resampled lot results in a PWL equal to or less than the original lot the cost of resampling and retesting shall be borne by the Contractor.

b. Payment for Resampled Lots. The Redefined PWL for a resampled lot shall be used to calculate the payment for that lot in accordance with Table 7.

c. Outliers. If the tests within a lot include a very large or a very small value which appears to be outside the normal limits of variation, check for an outlier in accordance with ASTM E 178, at a significance level of 5 percent, to determine if this value should be discarded and another measurement substituted. Failing test results should not be discarded unless it is clear that an outlying observation is the result of gross deviation from the prescribed testing procedures, i.e., core not taken properly, dropped core.

401-4.14 SURFACE TESTS. Tests for conformity with the specified crown and grade shall be made by the Contractor immediately after initial compaction. Any variation shall be corrected by the removal or addition of materials and by continuous rolling.

The finished surface shall not vary more than [ ] for the surface course when tested with a 16-foot (4.8 m) straightedge applied parallel with, or at right angles to, the centerline.

* *

Specify 1/4 inch (6.35 mm) for surface course and 3/8 inch (9.51 mm) for base course.

* *

After the completion of final rolling, the smoothness of the course shall be tested by the Engineer; humps or depressions exceeding the specified tolerances shall be immediately corrected by removing the defective work and replacing with new material, as directed by the Engineer. This shall be done at the Contractor's expense.

The finished surfaces of bituminous courses shall not vary from the gradeline, elevations, and cross sections shown on the contract drawings by more than 1/2 inch (12.70 mm). The Contractor shall correct pavement areas varying in excess of this amount by paving and replacing the defective work. skin patching will not be permitted.

METHOD OF MEASUREMENT

401-5.1 Plant mix bituminous concrete pavement shall be measured by the number of tons (kg) of bituminous mixture used in the accepted work. Recorded batch weights or truck scale weights will be used to determine the basis for the tonnage.

BASIS OF PAYMENT

401-6.1 Payment for an accepted bituminous concrete pavement shall be made at the full or adjusted contract unit price per ton (kg). The price shall be full compensation for furnishing all materials, for all preparation, mixing, and placing of these materials, and for all labor, equipment, tools, and incidentals necessary to complete the item.

a. Basis of Adjusted Payment. Table 7 shall be used to determine the adjusted contract price for a lot of material when the results of the pavement density tests for that lot indicate that the percentage of material above the specification limit is less than 90 percent.

b. Payment. Payment will be made under:

Item P-401-6.1	Bituminous **[Surface][Base]** Course—per ton (kg)

TESTING REQUIREMENTS

ASTM C 29	Unit Weight of Aggregate
ASTM C 88	Soundness of Aggregates by Use of Sodium Sulfate or Magnesium Sulfate

ASTM C 131	Resistance to Abrasion of Small Size Coarse Aggregate by Use of the Los Angeles Machine
ASTM C 136	Sieve or Screen Analysis of Fine and Coarse Aggregates
ASTM C 183	Sampling Hydraulic Cement
ASTM D 75	Sampling Aggregates
ASTM D 995	Requirements for Mixing Plants for Hot-Mixed Hot-Laid Bituminous Paving Mixtures
ASTM D 1075	Effect of Water on Cohesion of Compacted Bituminous Mixtures
ASTM D 1188	Bulk Specific Gravity of Compacted Bituminous Mixtures Using Paraffin-Coated Specimens
ASTM D 1559	Resistance to Plastic Flow of Bituminous Mixtures Using Marshall Apparatus
ASTM D 2172	Quantitative Extraction of Bitumen from Bituminous Paving Mixtures
ASTM D 2489	Degree of Particle Coating of Bituminous-Aggregate Mixtures
ASTM D 2726	Bulk Specific Gravity of Compacted Bituminous Mixtures Using Saturated Surface-Dry Specimens
ASTM D 3665	Random Sampling of Paving Materials
ASTM D 3666	Inspection and Testing Agencies for Bituminous Paving Materials
ASTM D 4318	Liquid Limit, Plastic Limit, and Plasticity Index of Soils
AASHTO T 30	Mechanical Analysis of Extracted Aggregate
The Asphalt Institute's Manual No. 2 (MS-2)	Mix Design Methods for Asphalt Concrete

MATERIAL REQUIREMENTS

ASTM D 242	Mineral Filler for Bituminous Paving Mixtures
ASTM D 490	Tar
ASTM D 946	Asphalt Cement for Use in Pavement Construction
ASTM D 3381	Viscosity-Graded Asphalt Cement for Use in Pavement Construction

ITEM P-402 POROUS FRICTION COURSE

(Central Plant Hot Mix)

DESCRIPTION

402-1.1 This item shall consist of an open-graded, bituminous surface course composed of mineral aggregate and bituminous material, mixed in a central mixing plant, and placed on a prepared surface in accordance with these specifications and shall conform to the dimensions shown on the plans.

* *

The porous friction course (PFC) is designed as a free-draining, wearing surface of uniform thickness which will provide a skid resistant and hydroplane resistant surface for aircraft landing and takeoff operations.

* *

MATERIALS

402-2.1 AGGREGATE. The aggregate shall consist of crushed stone, crushed gravel, or crushed slag with or without other inert finely divided mineral aggregate. The aggregate shall be composed of clean, sound, tough, durable particles, free from clay balls, organic matter, and other deleterious substances. The crushed aggregate portion which is retained on the 3/8-inch (9.5 mm) sieve shall not contain more than 15 percent by weight of flat or elongated particles as defined in ASTM D 693.

The crushed aggregate portion which is retained on the No. 4 (4.75 mm) sieve shall not show a percentage of wear greater than [ ] when tested in accordance with ASTM C 131.

* *

Percentage of wear shall not exceed 30. However, if local aggregates cannot meet this requirement and hauling of aggregates that meet the requirement is economically infeasible, the Engineer may waive the requirement for a higher percentage loss than specified if local aggregates have proven satisfactory performance under similar conditions of service.

* *

The crushed aggregate portion which passes the 3/4-inch (19.0 mm) sieve and is retained on the No. 4 (4.75 mm) sieve shall not show a total weighted average loss greater than [ ] percent in sodium sulfate solution or a magnesium soundness loss exceeding [ ] percent after 5 cycles when tested in accordance with ASTM C 88. The soundness test (ASTM C 88) may be waived by the Engineer where porous friction course will not be subjected to freezing and thawing.

* *

Sodium sulfate loss should not exceed 9 percent; magnesium loss should not exceed 12 percent. In certain specified cases where aggregates cannot economically comply with these maximums, aggregates with a higher percentage loss may be specified, provided satisfactory service has been demonstrated.

* *

The crushed aggregate portion passing the 3/4-inch (19.0 mm) sieve and retained on the 1/4-inch (6.3 mm) sieve shall have an estimated coated area "above 95 percent" when tested in accordance with ASTM D 1664. If coated area is "below 95 percent," the asphalt shall be treated with an antistripping agent. The amount of antistripping agent used shall be sufficient to produce a coated area "above 95 percent."

If crushed gravel aggregate is used, that portion retained on the No. 8 (2.36 mm) sieve and each succeeding coarser sieve shall contain at least 75 percent by weight of crushed pieces having two or more fractured faces and at least 90 percent by weight of particles containing one or more fractured faces. To count as a fractured face, the area of the fractured surface must be at least 75 percent of the smallest midsectional area of the particle being examined. To count as two fractured faces, the angle between two contiguous planes of fracture should be 30 degrees or more.

If crushed slag aggregates are used, the slag shall be air-cooled from the blast furnace process and shall have a compacted unit weight of not less than 70 pounds per cubic foot (1.12 mg/cubic meters) when tested in accordance with ASTM C 29.

402-2.2 FILLER. If filler, in addition to that naturally present in the aggregate, is necessary, it shall meet the requirements of ASTM D 242. When mineral filler is required to be batched separately, hydrated lime in the amount of 1.5 percent maximum by weight of the total aggregate shall be batched as part of the added mineral filler. No additional compensation will be allowed the Contractor for furnishing and using hydrated lime or other approved mineral filler that may be required by this specification.

402-2.3 BITUMINOUS MATERIAL. The bituminous material shall conform to the following requirements: [ ]

* *

The Engineer shall specify the type and grade of bituminous material based on geographical location and climatic conditions. The maximum mixing temperature and controlling specification shall also be specified. Types of material are listed below.

Type and Grade	Specification	Maximum Mixing Temperature Deg. F	Deg. C
Penetration Grade	**ASTM D 946**		
60-70		**335**	**170**
85-100		**325**	**165**
120-150		**310**	**155**
200-300		**295**	**146**
Viscosity Grade	**ASTM D 3381**		
AC-5		**295**	**145**
AC-10		**315**	**155**
AC-20		**330**	**165**
Viscosity Grade	**ASTM D 3381**		
AR-2000		**325**	**165**
AR-4000		**325**	**165**
AR-8000		**325**	**165**

In extremely hot climates, the Engineer should consider using AC-40 in lieu of AC-20. Experience of constructing PFC overlays in hot climates has shown the need for using a stiffer asphalt cement.

The Engineer may also want to consider using a neoprene additive in the asphalt cement. This modification exhibits improved elasticity, less tendency to flow, and greater stability at extreme temperatures. No more than 1-1/2 percent of the neoprene additive should be used in the total asphalt cement required, and it should be rejected if heated above 340° F (171° C).

* *

COMPOSITION

402-3.1 COMPOSITION OF MIXTURES. The porous friction course shall be composed of a mixture of aggregate, filler, bituminous material, and antistripping agent (if required). The several aggregate fractions shall be sized, graded, and combined in the proportions that meet the requirements of the job mix formula.

402-3.2 JOB MIX FORMULA. No bituminous mixture shall be produced for payment until the Contractor has submitted samples of the formula for each mixture to be used. The job mix formula for each mixture shall be in effect until modified in writing by the Engineer. The job mix formula for each mixture shall establish a single percentage passing each required sieve size, a single percentage of bituminous material to be added to the aggregate, and a single temperature for the mixture as it is discharged into the hauling units.

* *

The job mix formula should be determined by taking samples from the plant's hot bins by trial runs. Due to the variability in normal plant operations, the job mix formula based on stockpile sampling could give misrepresentative results.

* *

The combined aggregate shall be of such size that the percentage composition by weight, as determined by laboratory sieves, will conform to the gradation shown in Table 1 when tested in accordance with ASTM C 136. The range of bituminous contents shown in Table 1 is representative of most crushed stone and crushed gravel aggregates and is not intended to limit the bituminous content established in the job mix formula.

The gradations in Table 1 represent the limits which shall determine the suitability of the aggregate for use from the sources of supply. The aggregate, as finally selected, shall have a gradation within the limits designated in Table 1 and shall not vary from the low limit on one sieve to the high limit on the adjacent sieve, or vice versa, but shall be uniformly graded from coarse to fine.

TABLE 1. AGGREGATE—POROUS FRICTION COURSE

Sieve Size	Percentage by Weight Passing Sieve
¾ in. (19.0 mm)	*
½ in. (12.5 mm)	*
⅜ in. (9.5 mm)	*
No. 4 (4.75 mm)	*
No. 8 (2.36 mm)	*
No. 30 (600 micro-m)	*
No. 200 (75 micro-m)	*
Compacted Thickness	*
Bituminous Cement	5-7 percent by weight of total mix

* *

The aggregate gradation band applicable to a project shall be specified by the Engineer from the gradations in this note. The gradation shall be inserted in Table 1. Insert points are denoted by asterisks.

AGGREGATE—POROUS FRICTION COURSE

Sieve Size	Percentage by Weight Passing Sieves	
	¾ in. maximum	½ in. maximum
¾ in. (19.0 mm)	100	—
½ in. (12.5 mm)	70–100	100
⅜ in. (9.5 mm)	45–75	80–100
No. 4 (4.75 mm)	20–40	20–40
No. 8 (2.36 mm)	12–20	12–20
No. 30 (600 micro-m)	8–14	8–14
No. 200 (75 micro-m)	3–5	3–5
Compacted Thickness	1 in. (25 mm)	¾ in. (19 mm)
Bituminous Cement	5–7 percent by weight of total mix	

The gradations shown are based on aggregates of uniform specific gravity, and the percentages passing the various sieves will be subject to appropriate adjustments by the Engineer when aggregates of varying specific gravities are used. The adjustments to the job mix gradation curve should result in a curve of the same general shape as the median curve of the gradation band in Table 1 and fall within the gradation band.

Appendix A of the The Asphalt Institute's Manual Series No. 2 (MS-2), March 1979, contains a convenient procedure for "adjusting" the job mix gradation when aggregates of non-uniform specific gravity are proposed for use.

The bituminous content of porous friction courses shall be expressed as a percentage of the total mix by weight and shall be estimated by the Engineer on the basis of laboratory tests of the aggregates the Contractor proposes to use and the bituminous material specified.

The bituminous content estimated by the Engineer shall be within plus or minus 1 percent of the value obtained from the formula:

$$2\,K_c + 4.0$$

Where K_c is the surface constant for that part of the total dry aggregate that will pass a 3/4-inch (19.0 mm) sieve and be retained on the No. 4 (4.75 mm) sieve. Procedures for determining K_c are contained in Chapter IV of The Asphalt Institute's Manual Series No. 2 (MS-2). The bituminous content so estimated is the percentage by weight of the total dry aggregates and must be converted to the percent by weight of the total mix in the approved job mix formula.

* *

The job mix tolerances shown in Table 2 shall be applied to the job mix formula to establish a job control grading band. The full tolerances will still apply if application of the job mix tolerances results in a job control grading band outside the master grading band.

TABLE 2. JOB MIX FORMULA TOLERANCES

(Based on a Single Test)

Material	Tolerance - Plus or Minus
Aggregate passing No. 4 sieve or larger	7.0 percent
Aggregate passing No. 8 and No. 30 sieves	4.0 percent
Aggregate passing No. 20 sieve	2.0 percent
Bitumen	0.40 percent
Temperature of mix	26° F (14° C)

If a change is made in any component of the bituminous mix, a new job mix formula shall be established and approved by the Engineer before any additional material on the project is produced and placed. When unsatisfactory results or other conditions made it necessary, the Engineer may establish a new job mix formula.

402-3.3 TEST SECTIONS. Prior to full plant production, the Contractor shall prepare a quantity of PFC mixture according to the job mix formula. The amount of mixture should be sufficient to construct a test section [ ] long and [ ] wide. The test area will be designated by the Engineer. The mixture shall be placed in two sections and shall be of the same depth specified on the plans. The underlying pavement on which the test section is to be constructed shall be the same as the remainder of the course represented by the test section. The equipment to be used in construction of the test section shall be the same type and weight to be used on the remainder of the course represented by the test section.

If the test section should prove to be unsatisfactory, the necessary adjustments to the mix design, plant operation, and/or rolling procedures shall be made. Additional test sections, as required, shall be constructed and evaluated for conformance to the specifications. When test sections do not conform to specification requirements, the pavement shall be removed and replaced at the Contractor's expense. Full production shall not begin without approval of the Engineer. Test sections will be paid for in accordance with paragraph 402-6.1.

* *

The test section should be a minimum of 50 feet (15 m) long and 20 feet (6 m) wide. The test section affords the Contractor and the Engineer an opportunity to determine the quality of the mixture in place, as well as performance of the plant and laydown equipment. Wherever possible, the test section should be placed in an area where it will receive little or no traffic so that marginal quality trial runs can be safely left in place.

* *

CONSTRUCTION METHODS

402-4.1 WEATHER AND SEASONAL LIMITATIONS. The porous friction course shall be constructed only on a dry surface when the atmospheric temperature is 50° F (10° C) and rising (at calm wind conditions) and when the weather is not foggy or rainy.

402-4.2 BITUMINOUS MIXING PLANT. Plants used for the preparation of bituminous mixtures shall conform to the requirements of ASTM D 995 with the following changes:

a. Requirements for all Plants.

(1) Truck Scales. The bituminous mixture shall be weighed on approved scales furnished by the Contractor, or on public scales at the Contractor's expense. Such scales shall be inspected and sealed as often as the Engineer deems necessary to assure their accuracy. Scales shall conform to the requirements of Section 90.

(2) Testing Laboratory. The Contractor or producer shall provide laboratory facilities for control and acceptance testing functions during periods of mix production, sampling, and testing and whenever materials subject to the provisions of these specifications are being supplied or tested. The laboratory shall provide adequate equipment, space, and utilities as required for the performance of the specified tests.

(3) Inspection of Plant. The Engineer, or his/her authorized representative, shall have access, at all times, to all parts of the plant for checking adequacy of equipment; inspecting operation of the plant; verifying weights, proportions, and character of materials; and checking the temperatures maintained in the preparation of the mixtures.

(4) Storage Bins and Surge Bins. Paragraph 3.9 of ASTM D 995 is deleted.

402-4.3 HAULING EQUIPMENT. Trucks used for hauling the bituminous mixture shall have tight, clean, smooth beds. To prevent the mixture from adhering to them, the truck beds shall be lightly coated with a minimum amount of concentrated hydrated lime and water solution. The truck beds shall be raised to drain any excess solution before loading the mixture in the trucks. Each truck shall have a suitable cover to protect the mixture from adverse weather or long hauls. An insulated bed may be required to maintain the mixture at the specified temperature during hauling.

402-4.4 BITUMINOUS PAVERS. Bituminous pavers shall be self-contained, power-propelled units with an activated screed or strike-off assembly, heated if necessary, and shall be capable of spreading and finishing courses of bituminous plant mix material which will meet the specified thickness, smoothness, and grade.

The paver shall have a receiving hopper of sufficient capacity to permit a uniform spreading operation. The hopper shall be equipped with a distribution system to place the mixture uniformly in front of the screed. The screed or strike-off assembly shall produce a finished surface of the required evenness and texture without tearing, shoving, or gouging the mixture.

The paver shall be capable of operating at forward speeds consistent with satisfactory laying of the mixture.

If an automatic grade control device is used, the paver shall be equipped with a control system capable of automatically maintaining the screed elevation as specified herein. The control system shall be automatically actuated from either a reference line or a surface through a system of mechanical sensors or sensor-directed mechanisms or devices which will maintain the paver screed at a predetermined transverse slope and at the proper elevation to obtain the required surface.

402-4.5 ROLLERS. A minimum of two self-propelled, steel-wheel rollers shall be furnished. They shall be in good condition, capable of reversing without backlash, and capable of operating at slow speeds to avoid displacement of the bituminous mixture. The wheels shall be equipped with adjustable scrapers, water tanks, and sprinkling apparatuses to prevent the bituminous mixture from sticking to the wheels. The weight of each roller shall be 6 to 12 tons (5 400 to 10 800 kg). The use of equipment which results in excessive crushing of the aggregate will not be permitted.

402-4.6 PREPARATION OF MINERAL AGGREGATE. The aggregate for the mixture shall be dried and heated at the central mixing plant before entering the mixer. When introduced into the mixer, the combined aggregate moisture content (weighted according to the composition of the blend) shall be less than 0.25 percent for aggregate blends with water absorption of 2.5 percent or less and less than 0.50 percent for aggregate blends with water absorption greater than 2.5 percent. Water absorption of aggregates shall be determined by ASTM C 127 and C 128. The water absorption for the aggregate blend shall be the weighted average of the absorption values for the coarse aggregate retained on the No. 4 sieve (4.75 mm) and the fine aggregate passing the No. 4 sieve (4.75 mm). The water content test will be conducted in accordance with ASTM C 566. In no case shall the moisture content be such that foaming of the mixture occurs prior to placement. At the time of mixing, the temperature of the aggregate shall be within the range specified in the job mix formula. The maximum temperature and rate of heating shall be such that no damage occurs to the aggregates. particular care shall be taken so that aggregates high in calcium or magnesium content are not damaged by overheating. The aggregate shall be screened to specified sizes and conveyed in separate bins ready for mixing with bituminous material.

402-4.7 PREPARATION OF BITUMINOUS MIXTURE. The bituminous mixture shall be prepared in a central mixing plant. The mixture shall be prepared at the temperature designated by the Engineer within the range shown in paragraph 402-2.3.

The dry aggregate shall be combined in the plant in the proportionate amounts of each aggregate size required to meet the specified gradation. The quantity of aggregate for each batch shall be determined, measured, and conveyed into the mixer. In case of volumetric proportioning, the size of the openings shall be determined, and the gates shall be locked in position.

The quantity of bituminous material for each batch or the calibrated amount for continuous mixers shall be determined by the Engineer. It shall be measured by weight and introduced into the mixer within the temperature range specified in the job mix formula. For batch mixers, all aggregates shall be in the mixer before the bituminous material is added. In no case shall the temperature of the aggregate be more than 25° F (4° C) above the temperature of the bituminous material when adding the bituminous material. As determined by the Engineer, the mixing shall continue until all particles are coated uniformly. In no case shall the bituminous mixture be stored in storage silos or surge bins.

402-4.8 TRANSPORTATION AND DELIVERY OF THE MIXTURE. The mixture shall be transported from the central mixing plant to the paving job in trucks described in paragraph 402-4.3. The mixture shall be placed at a temperature between 200° F (94° C) and 295° F (146° C). Delivery of the mixture shall be scheduled so that spreading and rolling of a day's production can be completed during daylight hours the same day.

402-4.9 SPREADING AND LAYING.

a. Preparation of Existing Surfaces. All porous friction courses shall be constructed on an existing pavement surface that is structurally sound; is in good condition; is constructed to new pavement surface course smoothness criteria; and has Marshall stability and flow values comparable to those specified in Item P-401. The work involved in rehabilitating the existing pavement surface shall be otherwise provided for in the contract and is not a part of this PFC specification. Rehabilitation of the existing pavement including construction of bituminous overlay; joint sealing; crack repair; reconstruction of failed pavement areas; removal of rubber deposits; removal of pavement markings; and cleaning of grease, oil, and fuel spills shall be completed and accepted by the Engineer prior to the placement of the porous friction course.

Immediately before placing the porous friction course, the underlying course shall be cleared of all loose or deleterious material with power blowers, power brooms, or hand brooms as directed. A tack coat conforming to Item P-603 shall be placed, as directed by the Engineer, on those existing surfaces where a tack coat is necessary for bonding the PFC to the existing surface. If emulsified asphalt is used, placement of the PFC can be applied immediately. However, if cutback asphalt is used, placement of the PFC must be delayed until the tack coat has properly aired.

b. Placing. Hauling over material already placed shall not be permitted until the material has been thoroughly compacted as specified and allowed to develop its stability for a period of, at least, 12 hours. In areas where extremely hot temperatures occur, it is suggested that no traffic be allowed on the PFC until it has cooled overnight. Traffic should be discontinued if any closing of the PFC is observed. The bituminous mixture shall be placed at the required minimum lane width with an approved bituminous paver as specified in paragraph 402-4.4.

402-4.10 COMPACTION OF MIXTURE. After spreading, the mixture shall be thoroughly and uniformly compacted with power rollers. Rolling of the mixture shall begin as soon after spreading as it will bear the roller without undue displacement or hair-checking. Rolling shall be initiated with the drive wheel toward the paving machine. The sequence of rolling the first paving lane should be to first roll the lower edge (with reference to the transverse slope) of the lane and then to roll the upper edge. The interior of the lane should then be rolled from the lower side toward the upper edge with overlapping roller paths. On adjoining paving lanes, rolling shall begin by overlapping the joint (with the previous lane) by 6 to 9 inches (15 to 23 cm) and then rolling the outside edge of the new lane. The interior should be rolled from the outside edge toward the compacted joint with overlapping wheel paths. Alternate trips of the roller shall be of slightly different lengths. The number of passes with a steel-wheel roller shall be as determined by the test section. The optimum weight of the roller shall also be determined during test section construction.

The speed of the roller shall be slow enough to avoid displacement of the hot mixture. Any displacement occurring as a result of reversing the direction of the roller, or from any other cause, shall be corrected at once by raking and applying fresh mixture.

Sufficient rollers shall be furnished to handle the output of the plant. Rolling shall continue until all roller marks are eliminated and the surface is of uniform texture and conforms to the required cross section.

To prevent adhesion of the mixture to the roller, the wheels shall be kept properly moistened, but excessive water will not be permitted.

In areas not accessible to the roller, the mixture shall be thoroughly compacted with hot hand tampers.

Any mixture which becomes loose and broken, mixed with dirt, or in any way defective shall be removed and replaced with fresh hot mixture and immediately compacted to conform to the surrounding area. This work will be done at the Contractor's expense. Skin patching and handworking of the PFC mixture will not be allowed.

402–4.11 JOINTS. The formation of all joints shall be made in such a manner as to ensure a continuous bond between old and new sections of the course. All joints shall present the same texture, density, and smoothness as other sections of the course.

The roller shall not pass over the unprotected end of the freshly laid mixture except when necessary to form a transverse joint. When necessary to form a transverse joint, it shall be made by means of placing a bulkhead or by tapering the course, in which case the edge shall be cut back to its full depth and width on a straight line to expose vertical face. In both methods all contact surfaces shall be given a tack coat of bituminous material before placing any fresh mixture against the joint.

Longitudinal joints which are irregular, damaged, or otherwise defective shall be cut back to expose a clean, sound surface for the full depth of the course. All contact surfaces shall be given a tack coat of bituminous material prior to placing any fresh mixture against the joint. The longitudinal joint shall offset that in the existing course by at least 1 foot (30 cm).

402–4.12 SHAPING EDGES. While the surface is being compacted and finished, the Contractor shall carefully shape the longitudinal outside edges of the PFC to a vertical face at the established edge. When transitioning from PFC to existing pavement, transverse edges shall be constructed with a finer graded bituminous mixture.

402–4.13 SURFACE TESTS. After completion of the final rolling, the finished surface shall be tested with a 16–foot (5 m) straightedge and shall not vary more than 1/4 inch (6 mm). The 16–foot (5 m) straightedge shall be applied parallel with and at right angles to the runway centerline in a pattern that includes longitudinal and transverse joints. The 16–foot (5 m) straightedge shall be advanced approximately 1/2 its length in the line of measurement.

Areas of the porous friction course exceeding the specified tolerances shall be corrected at the Contractor's expense by removing the defective work and replacing it with new material. Skin patching or handworking will not be permitted.

402–4.14 SAMPLING PFC MIXTURE AND HOT BINS. Samples of the PFC mixture shall be taken at the point of discharge in hauling units and tested to control uniformity in the bituminous content and gradation. Samples shall be taken in accordance with ASTM D 979. Enough mixture shall be taken to prepare duplicate tests on each sample of mixture in accordance with ASTM D 2172. Samples shall be taken, at least, once for any central plant–run of more than 30 minutes and at least twice for any central plant–run of more than 5 hours.

Should the bituminous content of the duplicate tests agree within 0.50 percent, the average results shall be recorded. Variations greater than 0.50 percent between duplicate tests of the same sample shall also be recorded, and duplicate tests on an additional sample shall be run. The average value of the bituminous content should fall within the tolerance of the job mix formula as specified in paragraph 402–3.2. Should the average bituminous content for four samples not fall within the job mix tolerances, the Engineer may order the Contractor to cease production until such out–of–tolerance conditions have been remedied by the Con-

tractor. The gradation of the residual aggregate should be determined by using AASHTO T 30 and compared to the approved job mix formula.

The samples of PFC mixture will be used to control the uniformity of the Contractor's plant production. In addition, the Contractor shall clearly mark each hauling unit from which the representative samples have been taken so that the same mixture sample may be located in the completed pavement.

Completed PFC shall be determined "acceptable" or "unacceptable" on the basis of visual inspection by the Engineer. The Engineer shall immediately notify the Contractor of visual defects such as nonuniform texture, roller marks, bleeding of bituminous material, cracking and shoving of the mixture, and evidence of aggregate crushing during the roller operations, or nonconformance to the surface smoothness criteria as specified in paragraph 402–4.13.

"Unacceptable" PFC shall be removed, leaving a vertical face at the remaining PFC. The underlying surface shall be cleaned and a tack coat applied prior to replacing the PFC. All work shall be at the Contractor's expense. Unacceptable PFC shall not be measured for payment.

In addition to sampling and testing the PFC mixture, the Engineer shall sample each hot bin twice daily and furnish a gradation analysis of each hot bin according to ASTM C 136. The combined gradation analysis of the hot bins shall fall within the job mix formula tolerances. Should the hot bin gradation analysis fail to meet the tolerances of the job mix formula (on the same sieve size), the Engineer may order another analysis in addition to the two analyses required each day to confirm the results of the previous tests or tell the Contractor to cease plant production until such out–of–tolerance conditions have been corrected.

402–4.15 BITUMINOUS AND AGGREGATE MATERIAL (CONTRACTOR'S RESPONSIBILITY). Samples of the bituminous and aggregate materials that the Contractor proposes to use, together with a statement of their source and character, shall be submitted for approval prior to use. The Contractor shall require the manufacturer or producer of the bituminous and aggregate materials to furnish material subject to this and all other pertinent requirements of the contract. Only those materials which have been tested and approved for the intended use shall be acceptable.

The Contractor shall furnish the vendor's certified test reports for each carload or equivalent of bituminous material shipped to the project. The report shall be delivered to the Engineer before permission is granted to use the material. The vendor's certified test report for the bituminous material shall not be interpreted as a basis for final acceptance. All test reports shall be subject to verification by testing sample materials received for use on the project.

402–4.16 PROTECTION OF PAVEMENT. After final rolling, no vehicular traffic of any kind shall be permitted on the pavement until it has cured at least 12 hours. Newly constructed pavement areas shall not be opened to aircraft traffic until 24 hours after completion or unless otherwise authorized by the Engineer.

METHOD OF MEASUREMENT

402–5.1 Porous friction course shall be measured by the number of **[square yards (square meters)][tons (kg)]** of mixture used in the accepted work.

Only the areas of the porous friction course meeting the following thickness requirements shall be measured for payment:

To determine the thickness of the finished PFC, the Engineer shall take one core sample, not less than 2 inches (5 cm) in diameter, at random from each unit of the completed PFC area. A unit of the completed area shall be one paving lane wide by 1,000 feet (304 m) long. The last unit in any one paving lane shall include any remaining length in addition to the 1,000 feet (304 m).

When the measurement of any core is more than the maximum or less than the minimum allowable thickness, as shown in Table 3, additional cores shall be taken at 20–foot intervals (6 m) (parallel to and at right angles to the runway centerline) until the completed PFC is within such maximum or minimum thickness for the subunit being tested. Out–of–tolerance areas shall be deducted from the total **[square yards (square meters)] [tons (kg)]** PFC for payment. If, in the Engineer's judgment, such out of tolerance areas warrant

removal, the PFC shall be removed and the underlying course shall be cleaned (ready for reconstruction), all at the Contractor's expense.

TABLE 3. ALLOWABLE FINISHED PFC THICKNESS

	Nominal		Maximum		Minimum	
	in.	mm	in.	mm	in.	mm
¾ in. aggregate	1.0	25	1.50	37	0.75	19
½ in. aggregate	0.75	19	1.25	32	0.50	12

BASIS OF PAYMENT

402-6.1 Payment shall be made at the respective contract prices per **[square yard (square meter)][ton (kg)]** for porous friction course and per **[gallon (liter)][ton (kg)]** for bituminous material. The prices shall be full compensation for furnishing all materials; for all preparation and storage of materials; for cleaning the existing surface; for mixing, hauling, placing, and compacting the mixture (including initial test section); and for all tools, equipment, and incidentals necessary to complete each item. No separate payment is included in the contract for furnishing and batching mineral filler, or antistripping agents, should such items be required.

Rehabilitation of the existing pavement surface and the tack coat shall be measured and paid for at their respective contract prices.

Payment will be made under:

Item P-402-6.1	Porous Friction Course—**[per square yard (square meter)] [ton (kg)]**
Item P-402-6.2	Bituminous material—**[per gallon (liter)] [ton (kg)]**

TESTING REQUIREMENTS

ASTM C 29	Unit Weight of Aggregate
ASTM C 88	Soundness of Aggregates by Use of Sodium Sulfate or Magnesium Sulfate
ASTM C 127	Specific Gravity and Absorption of Coarse Aggregate
ASTM C 128	Specific Gravity and Absorption of Fine Aggregate
ASTM C 131	Resistance to Abrasion of Small Size Coarse Aggregate by Use of the Los Angeles Machine
ASTM C 136	Sieve or Screen Analysis of Fine and Coarse Aggregates
ASTM C 566	Total Moisture Content of Aggregate by Drying
ASTM D 693	Crushed Stone, Crushed Slag, and Crushed Gravel for Bituminous Macadam Base and Surface Courses of Pavements
ASTM D 979	Sampling Bituminous Paving Mixtures
ASTM D 1664	Coating and Stripping of Bitumen - Aggregate Mixtures
ASTM D 2172	Quantitative Extraction of Bitumen from Bituminous Paving Mixtures
AASHTO T30	Mechanical Analysis of Extracted Aggregate

MATERIAL REQUIREMENTS

ASTM D 242	Mineral Filler for Bituminous Paving Mixtures
ASTM D 946	Asphalt Cement for Use in Pavement Construction
ASTM D 3381	Viscosity-Graded Asphalt Cement for Use in Pavement Construction

PART VI—RIGID PAVEMENT

ITEM P-501 PORTLAND CEMENT CONCRETE PAVEMENT

DESCRIPTION

501-1.1 This work shall consist of pavement composed of portland cement concrete, **[with reinforcement]** **[without reinforcement]** constructed on a prepared subgrade or subbase course in accordance with these specifications and shall conform to the lines, grades, thicknesses, and typical cross sections shown on the plans.

* *

The Engineer shall specify with or without reinforcement.

* *

MATERIALS

501-2.1 FINE AGGREGATE. Fine aggregate for concrete shall conform to the requirements of ASTM C 33 and shall meet the requirements of Table 1.

TABLE 1. GRADATION FOR FINE AGGREGATE

ASTM C 33

Sieve Designation (square openings)	Percentage by Weight Passing Sieves
⅜ in (9.5 mm)	100
No. 4 (4.75 mm)	95–100
No. 8 (2.36 mm)	80–100
No. 16 (1.18 mm)	50–85
No. 30 (600 micro-m)	25–60
No. 50 (300 micro-m)	10–30
No. 100 (150 micro-m)	2–10

501-2.2 COARSE AGGREGATE. Coarse aggregate shall conform to the requirements of ASTM C 33. Gradation shall be in accordance with Table 2.

TABLE 2. GRADATION FOR COARSE AGGREGATE

ASTM C 33

Sieve Designations (square openings)		*	
		Percentage by Weight Passing Sieves	
in.	mm	*	*
2½	63	*	*
2	50.8	*	*
1½	38.1	*	*
1	25.0	*	*
¾	19.0	*	*
½	12.5	*	*
⅜	9.5	*	*
No. 4	4.75	*	*
No. 8	2.36	*	*

* *

The Engineer shall specify the aggregate to be furnished from the table shown in this note. The appropriate gradation shall be inserted into table 2. insert points are denoted by asterisks. Where locally available aggregates cannot be economically blended to meet the grading requirements, the gradations may be modified to fit the characteristics of such locally available aggregates.

Sieve Designations (square openings)		**From 2" to No. 4 (50.8mm - 4.75mm)**		**From 1½" to No. 4 (38.1mm - 4.75mm)**		**From 1" to No. 4 (25.0mm - 4.75mm)**
		Percentage by Weight Passing Sieves				
in.	**mm**	**2"-1"**	**1"-No.4**	**1½"-¾"**	**¾"-No.4**	**1"-No.4**
2½	**63**	---	---	---	---	---
2	**50.8**	**90-100**	---	**100**	---	---
1½	**38.1**	**35-70**	**100**	**90-100**	---	**100**
1	**25.0**	**0-15**	**95-100**	**20-55**	**100**	**95-100**
¾	**19.0**	---	---	**0-15**	**90-100**	---
½	**12.5**	**0-5**	**25-60**	---	---	**25-60**
⅜	**9.5**	---	---	**0-5**	**20-55**	---
No. 4	**4.75**	---	**0-10**	---	**0-10**	**0-10**
No. 8	**2.36**	---	**0-5**	---	**0-5**	**0-5**

* *

The percentage of wear shall be no more than [ ] when tested in accordance with [ ].

* *

The Engineer shall specify the percentage of wear. It should not exceed 40 percent. In certain cases where aggregate of this quality cannot be obtained economically, aggregate with a higher percentage of wear may be used if a satisfactory service record of at least 5 years' duration under similar conditions of service and exposure has been demonstrated. The Engineer shall specify ASTM C 131 for aggregates smaller than 1-1/2 inches (37 mm) and ASTM C 535 for aggregates larger than 3/4 inch (13 mm).

* *

Aggregates delivered to the mixer shall consist of crushed stone, crushed or uncrushed gravel, air-cooled blast furnance slag, or natural sand. The aggregate shall be composed of sound, tough, durable particles and shall meet the requirements for deleterious substances given in ASTM C 33. The aggregate in any size group shall not contain more than 8 percent by weight of flat or elongated pieces. A flat or elongated particle is one having a ratio between the maximum and the minimum dimensions of a circumscribing rectangular prism exceeding 5 to 1.

501-2.3 CEMENT. Cement shall conform to the requirements of [ ] type [ ].

* *

The Engineer shall specify one of the following: ASTM C 150 - Type I, IA, II, IIA, III, IIIA; ASTM C 595 - Type IP, IP-A, IS, IS-A.

* *

If, for any reason, cement becomes partially set or contains lumps of caked cement, it shall be rejected. Cement salvaged from discarded or used bags shall not be used.

501-2.4 PREMOLDED JOINT FILLER. Premolded joint filler for expansion joints shall conform to the requirements of ASTM [ ] and shall be punched to admit the dowels where called for on the plans. For contraction joints, the filler shall be a resin-impregnated fiberboard conforming to the physical requirements of ASTM D 1752. The filler for each joint shall be furnished in a single piece for the full depth and width required for the joint, unless otherwise specified by the Engineer. When the use of more than one piece is authorized for a joint, the abutting ends shall be fastened securely and held accurately to shape by stapling or other positive fastening means satisfactory to the Engineer.

* *

The Engineer shall designate either ASTM D 1751 or ASTM D 1752.

* *

501-2.5 JOINT SEALER. The joint sealer for the joints in the concrete pavement shall meet the requirements of Item P-605 and shall be of the type(s) specified in the plans.

501-2.6 STEEL REINFORCEMENT. Reinforcing shall consist of [ ] conforming to the requirements of [ ].

* *

The Engineer shall designate one of the following:

Welded Steel Wire Fabric	**ASTM A 185**
Welded Deformed Steel Fabric	**ASTM A 497**
Bar Mats	**ASTM A 184 or A 74D4**

Delete this section when not applicable to the project.

* *

501-2.7 DOWEL AND TIE BARS. Tie bars shall be deformed steel bars and conform to the requirements of ASTM A 615, ASTM A 616 or ASTM A 617, except that rail steel bars, grade 50 or 60, shall not be used for tie bars that are to be bent or restraightened during construction. tie bars designated as grade 40 in ASTM A 615 can be used for construction requiring bent bars.

Dowel bars shall be plain steel bars conforming to ASTM A 615, ASTM A 616, or ASTM A 617, and shall be free from burring or other deformation restricting slippage in the concrete. Before delivery to the construction site, a minimum of two-thirds of the length of each dowel bar shall be painted with one coat of zinc-chromate. If plastic or epoxy-coated steel dowels are used, no zinc-chromate coating is required, except when specified for a particular situation on the contract plans. Coated dowels shall conform to the requirements given in AASHTO M 254.

The sleeves for dowel bars used in expansion joints shall be metal, of an approved design to cover 2 to 3 inches (50 mm to 75 mm) of the dowel, with a closed end and with a suitable stop to hold the end of the bar at least 1 inch (25 mm) from the closed end of the sleeve. Sleeves shall be of such design that they will not collapse during construction.

501-2.8 WATER. Water used in mixing or curing shall be as clean and free of oil, salt, acid, alkali, sugar, vegetable, or other substances injurious to the finished product as possible. Water will be tested in accordance with the requirements of AASHTO T 26. Water known to be of potable quality may be used without testing.

501-2.9 COVER MATERIAL FOR CURING. Curing materials shall conform to one of the following specifications:

a. Liquid membrane-forming compounds for curing concrete shall conform to the requirements of ASTM C 309, Type 2.

b. White polyethylene film for curing concrete shall conform to the requirements of ASTM C 171.

c. White burlap-polyethylene sheeting for curing concrete shall conform to the requirements of ASTM C 171.

d. Waterproof paper for curing concrete shall conform to the requirements of ASTM C 171.

501-2.10 ADMIXTURES. The use of any material added to the concrete mix shall be approved by the Engineer. The Contractor shall submit certificates indicating that the material to be furnished meets all of the requirements indicated below. In addition, the Engineer may require the Contractor to submit complete test data from an approved laboratory showing that the material to be furnished meets all of the requirements of the cited specifications. Subsequent tests will be made of samples taken by the Engineer from the supply of the material being furnished or proposed for use on the work to determine whether the admixture is uniform in quality with that approved.

a. Pozzolanic Admixtures. Pozzolanic admixtures shall be fly ash or raw or calcined material pozzolans meeting the requirements of ASTM C 618 with the exception of loss of ignition, where the maximum should be less than 6 percent.

b. Air-Entraining Admixtures. Air-entraining admixtures shall meet the requirements of ASTM C 260 and shall be added to the mixer in the amount necessary to produce the specified air content. The air-entrainment agent and the water reducer admixture shall be compatible.

c. Water-Reducing Admixtures. Water-reducing, set-controlling admixtures shall meet the requirements of ASTM C 494, Type A, water-reducing or Type D, water-reducing and retarding. Water-reducing admixtures shall be added at the mixer separately from air-entraining admixtures in accordance with the manufacturer's printed instructions.

CONSTRUCTION METHODS

501-3.1 EQUIPMENT. Equipment and tools necessary for handling materials and performing all parts of the work shall be approved by the Engineer as to design, capacity, and mechanical condition. The equipment shall be at the job site before the start of construction operations for examination and approval.

a. Batching Plant and Equipment.

(1) General. The batching plant shall include bins, weighing hoppers, and scales for the fine aggregate and coarse aggregate. If bulk cement is used, a bin, hopper, and separate scale for cement shall be included. The weighing hoppers shall be properly sealed and vented to preclude dusting during operation.

(2) Bins and Hopper. Bins with adequate separate compartments for fine aggregate and coarse aggregate shall be provided in the batching plant. Each compartment shall discharge efficiently and freely into the weighing hopper. Means of control shall be provided so that, as the quantity desired in the weighing hopper is approached, the material may be added slowly and shut off with precision. A port or other opening for removing an overload of any one of the several materials from the hopper shall be provided. Weighing hoppers shall be constructed to eliminate accumulations of materials and to discharge fully.

(3) Scales. The scales for weighing aggregates and cement shall be of either the beam or the springless dial type. They shall be accurate within 0.5 percent throughout their range of use. When beam-type scales are used, provisions such as a "telltale" dial shall be made for indicating to the operator that the required load in the weighing hopper is being approached. A device on the weighing beams shall clearly indicate critical position. Poises shall be designed to be locked in any position and to prevent unauthorized change. The weight beam and "telltale" device shall be in full view of the operator while charging the hopper, and the operator shall have convenient access to all controls.

Scales shall be inspected and sealed as often as the Engineer may seem necessary to assure their continued accuracy. The Contractor shall have on hand not less than ten 50-pound (23 kg) weights for testing of all scales when directed by the Engineer.

b. Mixers.

(1) General. Concrete may be mixed at a central plant, or wholly or in part in truck mixers. Each mixer shall have attached in a prominent place a manufacturer's nameplate showing the capacity of the drum in terms of volume of mixed concrete and the speed of rotation of the mixing drum or blades.

A device accurate within 3 percent and satisfactory to the Engineer shall be provided at the mixer for determining the amount of air-entraining agent or other admixture to be added to each batch requiring such admixtures.

Mixers shall be examined daily for the accumulation of hard concrete or mortar and the wear of blades.

(2) Central Plant Mixer. Mixing shall be in an approved mixer capable of combining the aggregates, cement, and water into a thoroughly mixed and uniform mass within the specified mixing period, and of discharging the mixture without segregation. Central plant mixers shall be equipped with an acceptable timing device that will not permit the batch to be discharged until the specified mixing time has elapsed. The water system for a central mixer shall be either a calibrated measuring tank or a meter and shall not necessarily be an integral part of the mixer.

The mixers shall be examined daily for changes in condition due to accumulation of hard concrete or mortar or wear of blades. The pickup and throwover blades shall be replaced when they have worn down 3/4 inch (13 mm) or more. The Contractor shall have a copy of the manufacturer's design on hand showing dimensions and arrangement of blades in reference to original height and depth.

(3) Truck Mixers and Truck Agitators. Truck mixers used for mixing and hauling concrete and truck agitators used for hauling central mixed concrete shall conform to the requirements of ASTM C 94.

(4) Nonagitator Trucks. Nonagitating hauling equipment shall conform to the requirements of ASTM C 94.

c. Finishing Equipment.

(1) **Finishing Machine.** The finishing machine shall be equipped with one or more oscillating-type transverse screeds.

(2) **Vibrators.** For side-form construction, vibrators may be either the surface pan type for pavements less than 8 inches (200 mm) thick or the internal type with either immersed tube or multiple spuds, for the full width of the concrete slab. They may be attached to the spreader or the finishing machine, or they may be mounted on a separate carriage. They shall not come in contact with the joint, load-transfer devices, subgrade, or side forms. The frequency of the surface vibrators shall not be less than 3,500 vibrations per minute, and the frequency of the internal type shall not be less than 7,000 vibrations per minute for spud vibrators. When spud-type internal vibrators are used adjacent to the side forms, they shall have a frequency of not less than 3,500 vibrations per minute. Hand vibrators should be used to consolidate the concrete along forms and other isolated areas.

For slip-form construction, the paver shall vibrate the concrete for the full width and depth of the strip of pavement being placed. Vibration shall be accomplished by internal vibrators with a frequency range variable between 7,000 and 12,000 vibrations per minute. The amplitude of vibration shall be between 0.025 (0.6 mm) and 0.06 (1.5 mm) inches.

The number, spacing, frequency, and eccentric weights shall be provided as necessary to achieve an acceptable concrete density and finishing quality. Adequate power to operate all vibrators at the weight and frequency required for a satisfactory finish shall be available on the paver. The internal vibrators may be supplemented by vibrating screeds operating on the surface of the concrete. The frequency of surface vibrators shall not be less than 3,500 vibrations per minute. The Contractor shall furnish a tachometer or other suitable device for measuring the frequency of the vibrators. The vibrators and tamping elements shall be automatically controlled so that they shall be stopped as forward motion ceases. Any override switch shall be of the spring-loaded, momentary contact type:

d. Concrete Saw. When sawing of joints is specified, the Contractor shall provide sawing equipment adequate in number of units and power to complete the sawing to the required dimensions and at the required rate. The Contractor shall provide at least one standby saw in good working order. An ample supply of saw blades shall be maintained at the site of the work at all times during sawing operations. The Contractor shall provide adequate artificial lighting facilities for night sawing. All of this equipment shall be on the job both before and at all times during concrete placement.

e. Forms. Straight side forms shall be made of steel having a thickness of not less than 7/32 inch (6 mm) and shall be furnished in sections not less than 10 feet (3 m) in length. Forms shall have a depth equal to the prescribed edge thickness of the concrete without horizontal joint, and a base width equal to the depth of the forms. Flexible or curved forms of proper radius shall be used for curves of 100-foot (30 m) radius or less. Flexible or curved forms shall be of a design acceptable to the Engineer. Forms shall be provided with adequate devices for secure settings so that when in place they will withstand, without visible spring or settlement, the impact and vibration of the consolidating and finishing equipment. Flange braces shall extend outward on the base not less than two-thirds the height of the form. Forms with battered top surfaces and bent, twisted, or broken forms shall be removed from the work. Repaired forms shall not be used until inspected and approved. Built-up forms shall not be used, except as approved by the Engineer. The top face of the form shall not vary from a true plane more than 1/8 inch (3 mm) in 10 feet (3 m), and the upstanding leg shall not vary more than 1/4 inch (6 mm). The forms shall contain provisions for locking the ends of abutting sections together tightly for secure setting.

f. Slip-form Pavers. The paver shall be fully energized, self-propelled, and designed for the specific purpose of placing, consolidating, and finishing the concrete pavement, true to grade, tolerances, and cross section. It shall be of sufficient weight and power to construct the maximum specified concrete paving lane width as shown in the plans, at adequate forward speed, without transverse, longitudinal or vertical instability or without displacement. The paver should be equipped with electronic or hydraulic horizontal and vertical control devices.

501-3.2 FORM SETTING. Forms shall be set sufficiently in advance of the concrete placement to insure continuous paving operation. After the forms have been set to correct grade, the grade shall be thoroughly tamped, either mechanically or by hand, at both the inside and outside edges of the base of the forms.

Forms shall be staked into place with not less than 3 pins for each 10-foot (3 m) section. A pin shall be placed at each side of every joint.

Form sections shall be tightly locked and shall be free from play or movement in any direction. The forms shall not deviate from true line by more than 1/4 inch (6 mm) at any joint. Forms shall be so set that they will withstand, without visible spring or settlement, the impact and vibration of the consolidating and finishing equipment. Forms shall be cleaned and oiled prior to the placing of concrete.

The alignment and grade elevations of the forms shall be checked and corrections made by the Contractor immediately before placing the concrete. When any form has been disturbed or any grade has become unstable, the form shall be reset and rechecked.

501-3.3 CONDITIONING OF UNDERLYING COURSE, SLIP-FORM CONSTRUCTION. The compacted subgrade or subbase on which the pavement will be placed shall be widened approximately 3 feet (90 cm) to extend beyond the paving machine track to support the paver without any noticeable displacement. After the subgrade or subbase has been placed and compacted to the required density, the areas which will support the paving machine and the area to be paved shall be trimmed to the proper elevation and profile by means of a properly designed machine. The grade of the subbase on which the concrete pavement is to be placed shall be controlled automatically by steel guide wires erected and maintained by the Contractor. If the density of the base is disturbed by the trimming operations, it shall be corrected by additional compaction before the concrete is placed except when stabilized subbases are being constructed. If damage occurs on a stabilized subbase, it shall be corrected full depth by the Contractor or the damaged areas filled with concrete integral with the pavement. The grading operations should be delayed as long as possible and immediately precede paving insofar as practical, particularly if the base course is subjected to haul traffic. If traffic is allowed to use the prepared grade, the grade shall be checked and corrected immediately before the placement of concrete. The prepared grade shall be well moistened with water, without saturating, immediately ahead of concrete placement to prevent rapid loss of moisture from concrete. In cold weather the underlying subbase shall be protected so that it will be entirely free of frost when concrete is placed.

* *

Stabilized subbase is required to accommodate dual tandem gear aircraft with gross weights in excess of 200,000 pounds (90 700 kg).

* *

501-3.4 CONDITIONING OF UNDERLYING COURSE, SIDE-FORM CONSTRUCTION. The prepared grade shall be well moistened with water, without saturating, immediately ahead of concrete placement to prevent rapid loss of moisture from the concrete. Ruts or depressions in the subgrade or subbase caused by hauling or usage of other equipment shall be filled as they develop with suitable material (not with concrete or concrete aggregates) and thoroughly compacted by rolling. If damage occurs to a stabilized subbase, it shall be corrected full depth by the Contractor, or the damaged areas filled with concrete integral with the pavement. A multiple-pin templet weighing not less than 1,000 pounds (454 kg) per 20 feet (6 m) or other approved templet shall be provided and operated on the forms immediately in advance of the placing of the concrete. The templet shall be propelled only by hand and not attached to a tractor or other power unit. Templets shall be adjustable so that they may be set and maintained at the correct contour of the underlying course. The adjustment and operation of the templet shall be such as will provide an accurate retest of the grade before placing the concrete thereon. All excess material shall be removed. Low areas may be filled and compacted to a condition similar to that of the surrounding grade, or filled with concrete integral with the pavement. In cold weather, the underlying subbase shall be protected so that it will be entirely free from frost when the concrete is placed. The use of chemicals to eliminate frost in the underlying material will not be permitted. The templet shall be maintained in accurate adjustment, at all times by the Contractor, and should be checked daily. The work described under the foregoing paragraphs does not constitute a regular subgrading operation, but rather a final accurate check of the underlying course.

501-3.5 HANDLING, MEASURING, AND BATCHING MATERIAL. The batch plant site, layout, equipment, and provisions for transporting material shall assure a continuous supply of material to the work. Stockpiles shall be built up in layers of not more than 3 feet (90 cm) in thickness. Each layer shall be completely in place before beginning the next layer and shall not be allowed to "cone" down over the next

lower layer. Aggregates from different sources and of different grading shall not be stockpiled together. Improperly placed stockpiles will not be accepted by the Engineer.

Aggregates shall be handled from stockpiles or other sources to the batching plant in such manner to secure the specified grading of the material. Aggregates that have become segregated or mixed with earth or foreign material shall not be used. All aggregates produced or handled by hydraulic methods, and washed aggregates, shall be stockpiled or binned for draining at least 12 hours before being batched. Rail shipments requiring more than 12 hours will be accepted as adequate binning only if the car bodies permit free drainage. The fine aggregate and coarse aggregate shall be separately weighed into hoppers in the respective amounts set by the Engineer in the job mix. Cement shall be measured by weight. Separate scales and hopper, with a device to positively indicate the complete discharge of the batch of cement into the batch box or container, shall be used for weighing the cement.

When required by the contract or when permitted, batching plants shall be equipped to proportion aggregates and bulk cement, by weight, automatically using interlocked proportioning devices of an approved type. When bulk cement is used, the Contractor shall use a suitable method of handling the cement from weighing hopper to transporting container or into the batch itself for transportation to the mixer, such as a chute, boot, or other approved device, to prevent loss of cement. The device shall be arranged to provide positive assurance of the actual presence in each batch of the entire cement content specified.

When cement is placed in contact with the aggregates, batches may be rejected unless mixed within 1-1/2 hours of such contact. Batching shall be conducted so that the results in the weights of each material required will be within a tolerance of 1 percent for cement and 2 percent for aggregates.

Water may be measured either by volume or by weight. The accuracy of measuring the water shall be within plus or minus 1 percent of required amounts. Unless the water is to be weighed, the water-measuring equipment shall include an auxiliary tank from which the measuring tank shall be filled. The measuring tank shall be equipped with an outside tap and valve to provide for checking the setting, unless other means are provided for readily and accurately determining the amount of water in the tank. The volume of the auxiliary tank shall be at least equal to that of the measuring tank.

Methods and equipment for adding air-entraining agent or other admixtures to the batch, when required, shall be approved by the Engineer. All admixtures shall be measured into the mixer with an accuracy of plus or minus 3 percent.

501-3.6 PROPORTIONS. Proportioning requirements for concrete shall be designed for a flexural strength of [ ].

* *

The Engineer shall designate the design flexural strength. The minimum flexural strength allowable for airport pavements is 600 psi (4136 kPa) and the minimum allowable cement content is 5.2 bags of cement per cubic yard (cubic meter). Higher flexural strengths should be specified when local materials make this economically feasible.

* *

Prior to the start of paving operations and after approval of all material to be used in the concrete, the Contractor's test data showing the proportions and actual flexural strength obtained from the concrete. Flexural strength shall be as specified at 28 days using test specimens prepared in accordance with ASTM C 31 and tested in accordance with ASTM C 78. The mix determined shall be workable concrete having a slump for side-form concrete between 1 and 2 inches (25 mm and 50 mm) as determined by ASTM C 143. For vibrated slip-form concrete, the slump shall be between 1/2 inch (12 mm) and 1-1/2 inches (37 mm).

* *

Low slump concrete is a necessity for slip-form pavement, particularly for pavement with keyways or for pavement in excess of 10 inches (250 mm) thick.

* *

The minimum cement content shall be maintained to produce concrete of suitable durability and workability. The maximum water-cement ratio specified for concrete shall not be exceeded. Entrained air shall be required to increase durability and provide workability.

For slip-form construction, a high degree of uniformity in the plastic concrete is required. Caution should be exercised in establishing the air-entrainment percentage, as excessive air entrainment will aggravate edge slumping and insufficient air entrainment will result in poor concrete durability. Batches with slump in excess of 1-1/2 inches (37 mm) shall be wasted. Some edge slump of the wet concrete behind the side form on the paving machine will occur, even with low slump concrete. This may continue, though very slowly, until initial set has taken place. Provision for adequate compensating adjustment in the side form and in the final screed must be incorporated in the paver.

The cement content shall not be less than 5.2 sacks per cubic yard (cubic meter) nor shall the water-cement ratio, including free surface moisture on the aggregates but not including moisture absorbed by the aggregates, be more than 6 gallons per sack of cement. The cement content shall be determined in accordance with ASTM C 138.

Air-entraining admixture shall be added in such a manner that will insure uniform distribution of the agent throughout the batch. The air content of freshly mixed air-entrained concrete shall be based upon trial mixes with the materials to be used in the work adjusted to produce concrete of the required plasticity and workability. The percentage of air entrainment in the mix shall be [ ] percent plus or minus 1-1/2 percentage points. Air content shall be determined by testing in accordance with ASTM C 231 for gravel and stone coarse aggregate and ASTM C 173 for slag and other highly porous coarse aggregate.

* *

The Engineer shall specify the appropriate air content as determined from the table in this note.

ENTRAINED AIR TOLERANCES

Coarse Aggregate	Air Content Percent by Volume
1½ in. (38.1 mm), 2 in. (51 mm), 2½ in. (63 mm)	5½
¾ in. (19.1 mm), 1 in. (25.0 mm)	6
⅜ in. (9.5 mm), 1/2 in. (12.5 mm)	7½

* *

501-3.7 FIELD TEST SPECIMENS. Concrete samples shall be furnished by the Contractor and shall be taken in the field to determine the consistency, air content, and strength of the concrete. Flexural test beams shall be made each day that the concrete is placed. Each group of test beams shall be molded from the same batch of concrete and shall consist of a sufficient number of specimens to provide two flexural strength tests at each test age. One group of specimens will be made during the first half of each shift, and the other during the last portion of the shift. The specimens shall be made in accordance with ASTM C 31. However, at the start of paving operations and when the aggregate source, aggregate characteristics, or mix design is changed, additional groups of test beams may be required until the Engineer is satisfied that the concrete

mixture being used complies with the strength requirements of these specifications. Test ages will be 7 days and 28 days.

The flexural strength of the concrete shall meet the following requirements: (1) the average of any 4 consecutive strength tests, tested at the end of 28 days, shall have an average flexural strength equal to or greater than the specified flexural strength; (2) not more than 20 percent of the beams tested at the end of 28 days shall have a flexural strength less than the specified strength. Specimens which are obviously defective shall not be considered in the determination of the strength. When it appears that the test specimens will fail to conform to the requirements for strength, the Engineer shall have the right to order changes in the concrete sufficient to increase the strength to meet the requirements. When a satisfactory relationship between 7-day and 28-day strengths has been established and approved, the 7-day test results may be used as an indication of the 28-day strengths. However, the 7-day test results will not replace the results of the 28-day tests if the 28-day results fall below the requirements.

* *

Compressive strength tests offer some degree of correlation with flexural strength tests and may be used to obtain approximations of flexural strength. However, they shall not be used for project acceptance. The specimens shall be tested in accordance with ASTM C 39.

An alternate method of accepting concrete for flexural strength is on a lot basis. A lot will consist of [ ] square yards (square meters) or cubic yards (cubic meters) and will be divided into four equal sublots. One test will be made for each sublot. Random samples will be taken from the plastic concrete at the site in accordance with accepted statistical procedures.

The concrete shall be sampled in accordance with ASTM C 172. Flexural strength specimens shall be made in accordance with ASTM C 31 and tested in accordance with ASTM C 78.

The lot will be accepted without adjustment in payment if the average 28-day flexural strength, based on four acceptance tests of the lot, is equal to or greater than the acceptance limit shown under the 1.00 pay factor in the table in this note. If the average strength does not meet this limit, the Contractor may elect to leave the lot in place at a reduced payment determined in accordance with the table. If the average 28-day flexural strength of the lot fails to attain the lower acceptance limit shown for a 0.75 pay factor, the Engineer may order the removal of all the concrete in the lot. The pay factor for concrete which is allowed to remain in place when the flexural strength is below the 0.75 pay factor limit will be 0.50.

The Engineer shall specify the lot size in the specifications.

PAY FACTOR SCHEDULE FOR FLEXURAL STRENGTH AT 28 DAYS

Pay Factor	Acceptance Limits Average Flexural Strength (4 tests)
1.00	greater than M +0.120 R
0.95	M TO M +0.115 R
0.85	M -0.090 R TO M -0.005 R
0.75	M -0.170 R TO M -0.095 R

Where: M = Modulus of Rupture (specified 28 day flexural strength)
R = The range of a sample of Size N=4; the difference between the largest and smallest test

* *

501-3.8 MIXING CONCRETE. The concrete may be mixed at the work site, in a central mix plant or in truck mixers. The mixer shall be of an approved type and capacity. Mixing time shall be measured from the time all materials, except water, are emptied into the drum. Ready-mixed concrete shall be mixed and deliv-

ered in accordance with the requirements of ASTM C 94, except that the minimum required revolutions of the mixing speed for transit mixed concrete may be reduced to not less than that recommended by the mixer manufacturer. The number of revolutions recommended by the mixer manufacturer shall be indicated on the manufacturer's serial plate attached to the mixer. The Contractor shall furnish test data acceptable to the Engineer verifying that the make and model of the mixer will produce uniform concrete conforming to the provisions of ASTM C 94 at the reduced number of revolutions shown on the serial plate.

When mixed at the work site or in a central mixing plant, the mixing time shall not be less than 50 seconds nor more than 90 seconds. Mixing time ends when the discharge chut opens. Transfer time in multiple drum mixers is included in mixing time. The contents of an individual mixer drum shall be removed before a succeeding batch is emptied therein.

The mixer shall be operated at the drum speed as shown ont he manufacturer's nameplate on the approved mixer. Any concrete mixed less than the specified time shall be discarded at the Contractor's expense. The volume of concrete mixed per batch shall not exceed the mixer's nominal capacity in cubic feet (cubic meters), as shown on the manufacturer's standard rating plate on the mixer. An overload up to 10 percent above the mixer's nominal capacity may be permitted provided concrete test data for segregation and uniform consistency are satisfactory, and provided no spillage of concrete takes place. The batch shall be charged into the drum so that a portion of the mixing water shall enter in advance of the cement and aggregates. The flow of water shall be uniform, and all water shall be in the drum by the end of the first 15 seconds of the mixing period. The throat of the drum shall be kept free of such accumulations as may restrict the free flow of materials into the drum.

Mixed concrete from the central mixing plant shall be transported in truck mixers, truck agitators, or nonagitating trucks. The time elapsing from the time water is added to the mix until the concrete is deposited in place at the work site shall not exceed 30 minutes when the concrete is hauled in nonagitating trucks, nor 60 minutes when the concrete is hauled in truck mixers or truck agitators. Retempering concrete by adding water or by other means will not be permitted, except when concrete is delivered in transit mixers. With transit mixers additional water may be added to the batch materials and additional mixing performed to increase the slump to meet the specified requiremens, if permitted by the Engineer. All these operations must be performed within 45 minutes after the initial mixing operations and the water–cement ratio must not be exceede. Admixtures for increasing the workability or for accelerating the set will be permitted only when specified for in the contract.

501-3.9 LIMITATIONS OF MIXING. No concrete shall be mixed, placed, or finished when the natural light is insufficient, unless an adequate and approved artifical lighting system is operated.

Unless authorized in writing by the Engineer, mixing and concreting operations shall be discontinued when a descending air temperature in the shade and away from artificial het reaches 40° F (4° C) and shall not be resumed until an ascending air temperature in the shade and away from artificial heat reaches 35° F (2° C).

When concreting is authorized during cold weather, the aggregates may be heated by either steam or dry heat prior to being placed in the mixer. The apparatus used shall heat the mass uniformly and shall be arranged to preclude the possible occurrence of overheated areas which might be detrimental to the materials. Unless otherwise authorized, the temperature of the mixed concrete shall not be less than 50° F (10° C) at the time of placement in the forms.

If the air temperature is 35° F (2° C) or less at the time of placing concrete, the Engineer may require the water and/or the aggregates to be heated to not less than 70° F (20° C) nor more than 150° F (66° C). Concrete shall not be placed on frozen subgrade nor shall frozen aggregates by used in the concrete.

During periods of warm weather when the maximum daily air temperature exceeds 85° F (30° C), the following precautions should be taken. The forms and/or the underlying material shall be sprinkled with water immediately before placing the concrete. The concrete shall be placed at the coolest temperature practicable, and in no case shall the temperature of the concrete when placed exceed 90° F (33° C). The aggregates and/or mixing water shall be cooled as necessary to maintain the concrete temperature at or not more than the specified maximum.

501-3.10 PLACING CONCRETE.

a. Side-Form Method For the side-form method, the concrete shall be deposited on the moistened grade to require as little rehandling as possible. Unless truck mixers, truck agitators, or nonagitating hauling equipment are equipped with means for discharge of concrete without segregation of the materials, the concrete shall be unloaded into an approved spreading device and mechanically spread on the grade to prevent segregation of the materials. Placing shall be continuous between transverse joints without the use of intermediate bulkheads. Necessary hand spreading shall be done with shovels -- not rakes. Workmen shall not be allowed to walk in the freshly mixed concrete with boots or shoes coated with earth or foreign substances.

When concrete is to be placed adjoining a previously constructed lane of pavement and when mechanical equipment will be operated upon the existing lane of pavement, the concrete shall be at least 7 days old and at a flexural strength approved by the Engineer. If only finishing equipment is carried on the existing lane, paving in adjoining lanes may be permitted after 3 days, if approved by the Engineer.

Concrete shall be thoroughly consolidated against and along the faces of all forms and along the full length and on both sides of all joint assemblies by means of vibrators inserted in the concrete. Vibrators shall not be permitted to come in contact with a joint assembly, the grade, or a side form. In no case shall the vibrator be operated longer than 15 seconds in any one location, nor shall the vibrators be used to move the concrete.

Concrete shall be deposited as near to expansion and contraction joints as possible without disturbing them but shall not be dumped from the discharge bucket or hopper onto a joint assembly unless the hopper is well centered on the joint assembly.

Should any concrete materials fall on or be worked into the surface of a completed slab, they shall be removed immediately by approved methods.

b. Slip-Form Method. For the slip-form method, the concrete shall be placed with an approved crawler-mounted, slip-form paver designed to spread, consolidate, and shape the freshly placed concrete in one complete pass of the machine so that a minimum of hand finishing will be necessary to provide a dense and homogeneous pavement in conformance with requirements of the plans and specifications. The concrete should be placed directly on top of the joint assemblies to prevent them from moving when the paver moves over them. Side forms and finishing screeds shall be adjustable to the extent required to produce the specified pavement edge and surface tolerance. The side forms shall be of dimensions, shape, and strength to support the concrete laterally for a sufficient length of time so that no appreciable edge slumping will occur. Final finishing shall be accomplished while the concrete is still in the plastic state.

It is the intent of the specification to produce a high quality, dense, long lasting, and smooth pavement suitable for the high speed operations of roughness-sensitive heavy jet aircraft. This requires that all joints, and particularly all longitudinal joints, meet the specified tolerance throughout their length. The Engineer will designate the paving lanes in an apron, taxiway, or the outer runway paving lanes to be used for the initial paving operations. In the event that slumping or sloughing occurs behind the paver or if there are any other structural or surface defects which, in the opinion of the Engineer, cannot be corrected within permissible tolerances, the Engineer may halt paving operations until proper adjustment of the equipment or procedures have been made. In the event that satisfactory procedures and pavement are not achieved after not more than 2,000 linear feet (600 m) of single lane paving, the Contractor shall complete the balance of the work with the use of standard metal forms and the formed method of placing and curing.

501-3.11 STRIKE-OFF OF CONCRETE AND PLACEMENT OF REINFORCEMENT. Following the placing of the concrete, it shall be struck off to conform to the cross section shown on the plans and to an elevation such that when the concrete is properly consolidated and finished, the surface of the pavement shall be at the elevation shown on the plans. When reinforced concrete pavement is placed in two layers, the bottom layer shall be struck off to such length and depth that the sheet of reinforcing steel fabric or bar mat may be laid full length on the concrete in its final position without further manipulation. The reinforcement shall then be placed directly upon the concrete, after which the top layer of the concrete shall be placed, struck off, and screeded. If any portion of the bottom layer of concrete has been placed more than 30 minutes without being covered with the top layer or if initial set has taken place, it shall be removed and replaced with freshly mixed concrete at the Contractor's expense. When reinforced concrete is placed in one layer, the reinforcement may be positioned in advance of concrete placement or it may be placed in plastic concrete by mechanical or vibratory means after spreading.

Reinforcing steel, at the time concrete is placed, shall be free of mud, oil, or other organic matter that may adversely affect or reduce bond. Reinforcing steel with rust, mill scale, or a combination of both will be considered satisfactory, provided the minimum dimensions, weight, and tensile properties of a hand wire-brushed test specimen are not less than the applicable ASTM specification requirements.

501-3.12 JOINTS.

a. General.

(1) Longitudinal and Transverse Joints. Longitudinal and transverse joints shall be constructed as indicated on the plans and in accordance with these requirements. All joints shall be constructed true to line with their faces perpendicular to the surface of the pavement. Joints shall not vary more than 1/2 inch (12 mm) from a true line or from their designated position. The vertical surface of the pavement adjacent to all expansion joints shall be finished to a true plane and edged to a radius of 1/4 inch (6 mm) or as shown on the plans. The surface across the joints shall be tested with a 10-foot (3 m) straightedge as the joints are finished and any irregularities in excess of 1/4 inch (6 mm) shall be corrected before the concrete has hardened. When required, keyways shall be accurately formed with a template of metal or wood. The gauge or thickness of the material in the template shall be such that the full keyway, as specified, is formed and is in the correct location. Transverse joints shall be at right angles to the centerline of the pavement and shall extend the full width of the slab. The transverse joints in succeeding lanes shall be placed in line with similar joints in the first lane. All joints shall be so prepared, finished, or cut to provide a groove of the width and depth shown on the plans.

(2) Tie Bars. Tie bars shall consist of deformed bars installed principally in longitudinal joints as shown on the plans. Tie bars shall be placed at right angles to the centerline of the concrete slab and shall be spaced at intervals of 30 inches (76 cm), unless otherwise specified. They shall be held in position parallel to the pavement surface and midway between the surfaces of the slab. When tie bars extend into an unpaved lane, they may be bent at right angles against the form at longitudinal construction joints, unless threaded bolt or other assembled tie bars are specified. These bars shall not be painted, greased, or enclosed in sleeves.

(3) Dowel Bars. Dowel bars or other load-transfer units of an approved type shall be placed across transverse or other joints in the manner as specified on the plans. They shall be of the dimensions and spacings as shown and held rigidly in the middle of the slab depth in the proper horizontal and vertical alignment by an approved assembly device to be left permanently in place. The dowel or load-transfer and joint devices shall be rigid enough to permit complete assembly as a unit ready to be lifted and placed into position. A metal, or other type, dowel expansion cap or sleeve shall be furnished for each dowel bar used with expansion joints. These caps shall be substantial enough to prevent collapse and shall be placed on the ends of the dowels as shown on the plans. The caps or sleeves shall fit the dowel bar tightly and the closed end shall be watertight. The portion of each dowel painted with rust preventative paint, as required under Section 501-2.7, shall be thoroughly coated with asphalt MC-70, or an approved lubricant, to prevent the concrete from binding to that portion of the dowel. If free-sliding plastic-coated or epoxy-coated steel dowels are used, a lubrication bond breaker shall be used except when approved pullout tests indicate it is not necessary. In lieu of using dowel assemblies at contraction joints, dowel bars may be placed in the full thickness of pavement by a mechanical device approved by the Engineer.

(4) Slip-Form Construction. For slip-form construction, the following shall apply: when keyed construction joints are called for, a sheet metal keyway liner shall be required. The liner may remain in place permanently and become part of the keyed joint and shall be galvanized, copper clad, or of similar rust-resistant material, of sufficient stiffness to support the upper keyway flange. Two-piece hook bolts may be installed in either the male or female side of the keyed joint providing the installation is made without distorting the keyed dimensions or causing edge slump. If a bent tie bar installation is used, the tie bars shall be inserted through the sheet metal keyway liner only on the female side of the joint. The bent tie bar installation may cause breaking of some small amount of laitance where the bar goes through the liner when the exposed portion of the bar is bent for extension into the adjacent lane. In no case shall a bent tie bar installation for male keyways be permitted which will require chipping away of concrete to perform the straightening of the tie bar. Alternate methods of bar installation may be approved by the Engineer if the keyway can be formed to a tolerance of 1/4 inch (6 mm) in any dimension and without distortion or slump-

ing of the top of the male flange. Transverse joints with dowels will require particular care to insure the dowels are accurately placed and not disturbed during concrete placement. Transverse dowels will require use of an apparatus to firmly hold the dowels perpendicular to the joint and parallel to the slab surface. During the concrete placement operation, it is advisable to place plastic concrete directly on the dowel assembly immediately prior to passage of the paver to help maintain dowel alignment. In lieu of using dowel assemblies at contraction joints, dowel bars may be placed in the full thickness of pavement by a mechanical device approved by the Engineer.

b. Installation. The top of an assembled joint device shall be set at the proper distance below the pavement surface and the elevation shall be checked. Such devices shall be set to the required position and line and shall be securely held in place by stakes or other means during the pouring and finishing of the concrete. The premolded joint material shall be placed and held in a vertical position; if constructed in sections, there shall be no offsets between adjacent units. Dowel bars shall be checked for exact position and alignment as soon as the joint device is staked in place, and the device shall be tested to determine whether it is firmly supported. The maximum permissible tolerance on dowel bar alignment in each plane, horizontal and vertical, shall not exceed 2 percent or 1/4 inch (6 mm) per foot of a dowel bar. The most effective way to obtain proper alignment is with well-fabricated dowel baskets and dowel assemblies. In lieu of using dowel assemblies at contraction joints, dowel bars may be placed in the full thickness of pavement by mechanical device approved by the Engineer.

When joints in concrete pavements are sawed, the joints shall be cut as shown on the plans. Equipment shall be as described in section 501-3.1. The circular cutter shall be capable of cutting a groove in a straight line and shall produce a slot at least 1/8 inch (3 mm) wide and to the depth shown on the plans. When shown on the plans or required by the specifications, the top portion of the slot or groove shall be widened by means of a second shallower cut or by suitable and approved beveling to provide adequate space for joint sealers. Sawing of the joints shall commence as soon as the concrete has hardened sufficiently to permit cutting without chipping, spalling, or tearing. Sawing shall be carried on both during the day and night as required. The joints shall be sawed at the required spacing consecutively in sequence of the concrete placement, unless otherwise approved by the Engineer.

c. Longitudinal Joints.

(1) Construction. Longitudinal construction joints necessary for lane construction shall be formed against suitable side forms (usually made of steel) with or without keyways, as indicated in the plans. Wooden forms may be used under special conditions, when approved by the Engineer. When the concrete is placed using slip-form pavers, the keyway shall be formed in the plastic concrete by means of preformed metal keyway liners which are inserted during the slip-form operations to form the female side of the key and which may be left in place. The dimensions of the keyway forms shall not vary more than plus or minus 1/4 inch (6 mm) from the dimensions indicated and shall not deviate more than plus or minus 1/4 inch (6 mm) from the mid-depth of the pavement. A male keyway may be used providing the keyway and edge tolerances are met. Where butt-type joints with dowels are designated, the dowels for this type shall be painted and greased. The edges of the joint shall be finished with a grooving tool or edging tool, and a space or slot shall be formed along the joint of the dimensions, as indicated, to receive the joint sealing material. Longitudinal construction joints shall be sawed to provide a groove at the top conforming to the details and dimensions indicated on the plans. Provisions shall be made for the installation of tie bars as noted on the plans.

(2) Contraction or weakened-plane type. The longitudinal groove formed or sawed in the top of the slab shall be installed where indicated on the drawings. The groove shall be formed in the plastic concrete with suitable tools or material to obtain the width and depth specified, or it shall be sawed with approved equipment in the hardened concrete to the dimensions required. When the groove is formed in plastic concrete, it shall be true to line with not more than 1/4-inch (6 mm) variation in 10 feet (3 m); it shall be uniform in width and depth; and the sides of the groove shall be finished even and smooth with an edging tool. If an insert material is used, the installation and edge finish shall be according to the manufacturer's instructions. The sawed groove shall be straight and of uniform width and depth. In either case, the groove shall be clean cut so that spalling will be avoided at intersections with transverse joints. Tie bars shall be installed across these joints where indicated on the plans.

(3) **Expansion.** Longitudinal expansion joints shall be installed as indicated on the plans. The premolded filler, of the thickness as shown on the plans, shall extend for the full depth and width of the slab at the joint, except for space for sealant at the top of the slab. The filler shall be securely staked or fastened into position perpendicular to the proposed finished surface. A metal cap shall be provided to protect the top edge of the filler and to permit the concrete to be placed and finished. After the concrete has been placed and struck off, the cap shall be carefully withdrawn leaving the space over the premolded filler. The edges of the joint shall be finished and tooled while the concrete is still plastic.

d. Transverse Joints.

(1) **Expansion.** Transverse expansion joints shall be installed at the locations and spacing as shown on the plans. The joints shall be installed at right angles to the centerline and perpendicular to the surface of the pavement. The joints shall be installed and finished to insure complete separation of the slabs. Expansion joints shall be of a premolded type conforming to these specifications and with the plans and shall be the full width of the pavement strip.

All concrete shall be cleaned from the top of the joint material. Before the pavement is opened to traffic, this space shall be swept clean and filled with approved joint sealing material.

All devices used for the installation of expansion joints shall be approved by the Engineer. They shall be easily removable without disturbing the concrete and held in proper transverse and vertical alignment. Immediately after forms are removed, any concrete bridging the joint space at the ends shall be removed for the full width and depth of the joint.

When specified, expansion joints shall be equipped with dowels of the dimensions and at the spacing and location indicated on the plans. The dowels shall be firmly supported in place and accurately aligned parallel to the subgrade and the centerline of the pavement by means of a dowel assembly which will remain in the pavement and will ensure that the dowels are not displaced during construction.

Other types of load-transfer devices may be used, when approved by the Engineer.

(2) **Contraction.** Transverse contraction joints, weakened-plane joints, or both, shall be installed at the locations and spacing as shown on the plans. These joints will be installed by forming a groove or cleft in the top of the slab while the concrete is still plastic or by sawing a groove into the concrete surface after the concrete has hardened in the same manner as specified in paragraph 501-3.12c(2). Dowel bar assemblies shall be installed, when required, as shown on the plans.

(3) **Construction.** Ttransverse construction joints shall be installed at the end of each day's placing operations and at any other points within a paving lane when concrete placement is interrupted for more than 30 minutes or it appears that the concrete will obtain its initial set before fresh concrete arrives. When the installation of the joint can be planned in advance, it shall be located at a contraction or expansion joint. The joint shall not be allowed within 8 feet (240 cm) of a regular spaced transverse joint. If the pouring of the concrete has been stopped, causing a joint to fall within this limit, it shall not be installed, and the fresh placed concrete shall be removed back to the 8 foot (240 cm) limit.

501-3.13 FINAL STRIKE-OFF, CONSOLIDATION, AND FINISHING.

a. Sequence. The sequence of operations shall be the strike-off and consolidation, floating and removal of laitance, straightedging, and final surface finish. The addition of superficial water to the surface of the concrete to assist in finishing operations generally will not be permitted. If the application of water to the surface is permitted, it shall be applied as a fog spray by means of approved spray equipment.

b. Finishing at Joints. The concrete adjacent to joints shall be compacted or firmly placed without voids or segregation against the joint material; it shall be firmly placed without voids or segregation under and around all load-transfer devices, joint assembly units, and other features designed to extend into the pavement. Concrete adjacent to joints shall be mechanically vibrated as required in section 501-3.10. After the concrete has been placed and vibrated adjacent to the joints, the finishing machine shall be operated in a manner to avoid damage or misalignment of joints. If uninterrupted operations of the finishing machine, to, over, and beyond the joints, cause segregation of concrete, damage to, or misalignment of the joints, the finishing machine shall be stopped when the screed is approximately 8 inches (200 mm) from the joint. Segregated concrete shall be removed from the front of and off the joint,; the screed shall be lifted and set

directly on top of the joint, and the forward motion of the finishing machine shall be resumed. Thereafter, the finishing machine may be run over the joint without lifting the screed, provided there is no segregated concrete immediately between the joint and the screed or on top of the joint.

c. Machine Finishing. The concrete shall be spread as soon as it is placed, and it shall be struck off and screeded by an approved finishing machine. The machine shall go over each area as many times and at such intervals as necessary to give the proper consolidation and to leave a surface of uniform texture. Excessive operation over a given area shall be avoided. When side forms are used, the tops of the forms shall be kept clean by an effective device attached to the machine, and the travel of the machine on the forms shall be maintained true without lift, wobbling, or other variation tending to affect the precision finish. During the first pass of the finishing machine, a uniform ridge of concrete shall be maintained ahead of the front screed for its entire length. When in operation, the screed shall be moved forward with a combined longitudinal and transverse shearing motion, always moving in the direction in which the work is progressing, and so manipulated that neither end is raised from the side forms during the striking-off process. If necessary, this shall be repeated until the surface is of uniform texture, true to grade and cross section, and free from porous areas.

d. Hand Finishing. Hand finishing methods will not be permitted, except under the following conditions: in the event of breakdown of the mechanical equipment, hand methods may be used to finish the concrete already deposited on the grade; in areas of narrow widths or of irregular dimensions where operation of the mechanical equipment is impractical. Concrete, as soon as placed, shall be struck off and screeded. An approved portable screed shall be used. A second screed shall be provided for striking off the bottom layer of concrete when reinforcement is used.

The screed for the surface shall be at least 2 feet (6 cm) longer than the maximum width of the slab to be struck off. It shall be of approved design, sufficiently rigid to retain its shape, and shall be constructed either of metal or of other suitable material covered with metal. Consolidation shall be attained by the use of a suitable vibrator.

e. Floating. After the concrete has been struck off and consolidated, it shall be further smoothed, trued, and consolidated by means of a longitudinal float, using one of the following methods:

(1) Hand Method. The hand-operated longitudinal float shall not be less than 12 feet (3.5 m) in length and 6 inches (150 mm) in width, properly stiffened to prevent flexibility and warping. The longitudinal float, operated from foot bridges resting on the side forms and spanning but not touching the concrete, shall be worked with a sawing motion, while held in a floating position parallel to the pavement centerline and passing gradually from one side of the pavement to the other. Forward movement along the centerline of the pavement shall be in successive advances of not more than one-half the length of the float. Any excess water or soupy material shall be wasted over the pavement edge on each pass.

(2) Mechanical Method. The Contractor may use a machine composed of a cutting and smoothing float(s), suspended from and guided by a rigid frame. The frame shall be carried by four or more visible wheels riding on, and constantly in contact with, the side forms or pavement subgrade. If necessary, long-handled floats having blades not less than 5 feet (150 cm) in length and 6 inches (150 mm) in width may be used to smooth and fill in open-textured areas in the pavement. Long-handled floats shall not be used to float the entire surface of the pavement in lieu of mechanical methods. When strike-off and consolidation are done by hand and the crown of the pavement will not permit the use of the longitudinal float, the surface shall be floated transversely by means of a long-handled float. Care shall be taken not to work the crown out of the pavement during the operation. After floating, any excess water and laitance shall be removed from the surface of the pavement by a straightedge 10 feet (3 m) or more in length. Successive drags shall be lapped one-half the length of the blade.

f. Straight-edge Testing and Surface Correction. After the pavement has been struck off and consolidated and while the concrete is still plastic, it shall be tested for trueness with a 16-foot (4.8 m) straightedge. For this purpose the Contractor shall furnish and use an accurate 16-foot (4.8 m) straightedge swung from handles 3 feet (90 cm) longer than one-half the width of the slab. The straightedge shall be held in contact with the surface in successive positions parallel to the centerline and the whole area gone over from one side of the slab to the other, as necessary. Advancing shall be in successive stages of not more than one-half the length of the straightedge. Any excess water and laitance shall be removed from the surface of the

pavement. Any depressions shall be immediately filled with freshly mixed concrete, struck off, consolidated, and refinished. High areas shall be cut down and refinished. Special attention shall be given to assure that the surface across joints meets the requirements for smoothness. Straightedge testing and surface corrections shall continue until the entire surface is found to be free from observable departures from the straightedge and until the slab conforms to the required grade and cross section. The use of long-handled wood floats shall be confined to a minimum; they may be used only in emergencies and in areas not accessible to finishing equipment.

501-3.14 SURFACE TEXTURE. The surface of the pavement shall be finished with either a broom or burlap drag finish for all newly constructed concrete pavements.

a. Brush or Broom Finish. If the pavement surface texture is to be a type of brush or broom finish, it shall be applied when the water sheen has practically disappeared. The equipment shall operate transversely across the pavement surface, providing corrugations that are uniform in appearance and approximately 1/16 of an inch (2 mm) in depth. It is important that the texturing equipment not tear or unduly roughen the pavement surface during the operation. Any imperfections resulting from the texturing operation shall be corrected.

b. Burlap Drag Finish. If a burlap drag is used to texture the pavement surface, it shall be at least 15 ounces per square yard (555 grams per square meter). To obtain a rough-textured surface, the transverse threads of the burlap should be removed approximately 1 foot (3 cm) from the trailing edge. A heavy build-up of grout on the burlap threads produces the desired wide sweeping longitudinal striations on the pavement surface. The corrugations shall be uniform in appearance and approximately 1/16 of an inch (2 mm) in depth.

* *

Several methods are available for providing skid resistant runway pavement surfaces. They are saw-cut grooves, and grooves or wire combed texture constructed in plastic concrete. In all cases, either a broom, brush, or burlap finish in the plastic concrete pavement shall be provided prior to construction of the skid surface treatment. The Engineer shall specify one of the above methods if a skid resistant surface is required.

* *

501-3.15 SKID RESISTANT SURFACES. A skid resistant surface shall be provided by construction of [ ].

* *

The Engineer shall specify either sawcut grooves, plastic grooves, or wire combing and include one of the following paragraphs in the specification:

Sawcut Grooves. For new concrete pavements that have hardened, transverse grooves shall be saw-cut in the pavement forming a 1/4 inch (6 mm) by 1/4 inch (6 mm) by 1-1/4 inches (31 mm) configuration. The grooves shall be continuous for the entire runway length. They shall be saw-cut transversely in the runway pavement to within 10 feet (3 m) of the runway pavement edge to allow adequate space for equipment operation. The maximum transverse saw-cut grooves shall not exceed 130 feet (40 m). The tolerances for the saw-cut grooves shall meet the following:

Alignment tolerance.

Plus or minus 1-1/2 inches (37 mm) in alignment for 75 feet (23 m).

Groove tolerance.

Minimum depth 3/16 inch (5 mm).

Maximum depth 5/16 inch (8 mm).

Minimum width 3/16 inch (5 mm).

Maximum width 5/16 inch (8 mm).

Center-to-center spacing.

Minimum spacing 1-1/4 inches (31 mm).

Maximum spacing 2 inches (50 mm).

Saw-cut grooves shall not be closer than 3 inches (75 mm) to transverse paving joints. Grooves may be continued through longitudinal construction joints. Cleanup of waste material shall be continuous during the grooving operation. Waste material may be disposed of by either flushing with water, sweeping, or vacuuming. Waste material must not be allowed to enter the airport storm or sanitary sewer system.

Plastic grooves. The grooves formed in the plastic concrete shall be 1/4 inch by 1/4 inch by 1-1/4 inches (6 mm x 6mm x 31 mm). The grooves shall be continuous for the entire runway length and width. The tolerances for the grooves formed in plastic concrete shall meet the following:

Alignment tolerance.

Plus or minus 3 inches (75 mm) in alignment for 75 feet (23 m).

Groove tolerance.

Minimum depth 1/8 inch (3 mm).

Maximum depth 3/8 inch (10 mm).

Minimum width 1/8 inch (3 mm).

Maximum width 3/8 inch (10 mm).

Center-to-center spacing.

Minimum spacing 1-1/4 inches (31 mm).

Maximum spacing 2 inches (50 mm).

Wire Combing. The wire combing technique shall use steel combs or tines of various dimensions to form groove-like texture in the plastic concrete pavement and shall provide grooves that are approximately 1/8 inch (3 mm) by 1/8 inch (3 mm) spaced 1/2 inch (13 mm) center-to-center.

****

501-3.16 SURFACE TEST. As soon as the concrete has hardened sufficiently, the pavement surface shall be tested with a 16-foot (4.8 m) straightedge or other specified device. Areas in a slab showing high spots of more than 1/4 inch (6 mm) but not exceeding 1/2 inch (12 mm) in 16 feet (4.8 m) shall be marked and immediately ground down with an approves grinding machine to an elevation that will fall within the tolerance of 1/4 inch (6 mm) or less. Where the departure from correct cross section exceeds 1/2 inch (12 mm), the pavement shall be removed and replaced at the expense of the Contractor when so directed by the Engineer.

Any area or section so removed shall not be less than 10 feet (3 m) in length nor less than the full width of the lane involved. When it is necessary to remove and replace a section of pavement, any remaining portion of the slab adjacent to the joints that is less than 10 feet (3 m) in length shall also be removed and replaced.

501-3.17 CURING. Immediately after the finishing operations have been completed and marring of the concrete will not occur, the entire surface of the newly placed concrete shall be cured in accordance with one of the methods below. In all cases in which curing requires the use of water, the curing shall have prior right to all water supply or supplies. Failure to provide sufficient cover material of whatever kind the Contractor may elect to use, or lack of water to adequately take care of both curing and other requirements, shall be cause for immediate suspension of concreting operations. The concrete shall not be left exposed for more than 1/2 hour during the curing period. The following are alternate approved methods for curing concrete pavements.

a. Impervious Membrane Method. The entire surface of the pavement shall be sprayed uniformly with white pigmented curing compound immediately after the finishing of the surface and before the set of the concrete has taken place. The curing compound shall not be applied during rainfall. Curing compound shall be applied by mechanical sprayers under pressure at the rate of 1 gallon (4 liters) to not more than 150 square feet (14 square meters). The spraying equipment shall be of the fully atomizing type equipped with a tank agitator. At the time of use, the compound shall be in a thoroughly mixed condition with the pigment uniformly dispersed throughout the vehicle. During application the compound shall be stirred continuously by effective mechanical means. Hand spraying of odd widths or shapes and concrete surfaces exposed by the removal of forms will be permitted. Curing compound shall not be applied to the inside faces of joints to be sealed, but approved means shall be used to insure proper curing for 72 hours. The curing compound shall be of such character that the film will harden within 30 minutes after application. Should the film become damaged from any cause within the required curing period, the damaged portions shall be repaired immediately with additional compound. Upon removal of side forms, the sides of the exposed slabs shall be protected immediately to provide a curing treatment equal to that provided for the surface.

b. Polyethylene Films. The top surface and sides of the pavement shall be entirely covered with polyethylene sheeting. The units shall be lapped at least 18 inches (45 cm). The sheeting shall be placed and weighted to cause it to remain in contact with the surface covered. The sheeting shall have dimensions that will extend at least twice the thickness of the pavement beyond the edges of the pavement. Unless otherwise specified, the sheeting shall be maintained in place for 72 hours after the concrete has been placed.

c. Waterproof Paper. The top surface and sides of the pavement shall be entirely covered with waterproofed paper. The units shall be lapped at least 18 inches (45 cm). The paper shall be placed and weighted to cause it to remain in contact with the surface covered. The paper shall have dimensions that will extend at least twice the thickness of the pavement beyond the edges of the slab. The surface of the pavement shall be thoroughly wetted prior to placing of the paper. Unless otherwise specified, the paper shall be maintained in place for 72 hours after the concrete has been placed.

d. White Burlap–Polyethylene Sheets. The surface of the pavement shall be entirely covered with the sheeting. The sheeting used shall be such length (or width) that it will extend at least twice the thickness of the pavement beyond the edges of the slab. The sheeting shall be placed so that the entire surface and both edges of the slab are completely covered. The sheeting shall be placed and weighted to remain in contact with the surface covered, and the covering shall be maintained fully wetted and in position for 72 hours after the concrete has been placed.

e. Curing in Cold Weather. When the average daily temperature is below 40° F (4° C), curing shall consist of covering the newly laid pavement with not less than 12 inches (300 mm) of loose, dry hay or straw, or equivalent protective curing authorized by the Engineer, which shall be retained in place for 10 days. The hay or straw shall be secured to avoid being blown away. Admixture for curing or temperature control may be used only when authorized by the Engineer.

When concrete is being placed and the air temperature may be expected to drop below 35° F (2° C), a sufficient supply of straw, hay, grass, or other suitable blanketing material such as burlap or polyethylene shall be provided along the work. Any time the temperature may be expected to reach the freezing point during the day or night, the material so provided shall be spread over the pavement to a sufficient depth to prevent freezing of the concrete. The period of time such protection shall be maintained shall not be less than 10 days. A minimum of 3 days is required when high, early strength concrete is used. The Contractor shall be responsible for the quality and strength of the concrete placed during cold weather, and any concrete injured by frost action shall be removed and replaced at the Contractor's expense.

501-3.18 REMOVING FORMS. Unless otherwise specified, forms shall not be removed from freshly placed concrete until it has set for at least 12 hours, except where auxiliary forms are used temporarily in widened areas. Forms shall be removed carefully to avoid damage to the pavement. After the forms have been removed, the sides of the slab shall be cured as outlined in one of the methods indicated in paragraph 501-3.17. Major honeycombed areas shall be considered as defective work and shall be removed and replaced. Any area or section so removed shall not be less than 10 feet (3 m) in length nor less than the full width of the lane involved. When it is necessary to remove and replace a section of pavement, any remain-

ing portion of the slab adjacent to the joints that is less than 10 feet (3 m) in length shall also be removed and replaced.

501-3.19 SEALING JOINTS. The joints in the pavement shall be sealed in accordance with Item P-605.

501-3.20 PROTECTION OF PAVEMENT. The Contractor shall protect the pavement and its appurtenances against both public traffic and traffic caused by the Contractor's employees and agents. This shall include watchmen to direct traffic and the erection and maintenance of warning signs, lights, pavement bridges, or crossovers, etc. The plans or special provisions will indicate the location and type of device or facility required to protect the work and provide adequately for traffic. Any damage to the pavement occurring prior to final acceptance shall be repaired or the pavement replaced at the Contractor's expense. In order that the concrete be properly protected against the effects of rain before the concrete is sufficiently hardened, the Contractor will be required to have available at all time materials for the protection of the edges and surfaces of the unhardened concrete. Such protective materials shall consist of rolled polyethylene sheeting at least 4 mils (0.1 mm) thick of sufficient length and width to cover the plastic concrete slab and any edges. The sheeting may be mounted on either the paver or a separate movable bridge from which it can be unrolled without dragging over the plastic concrete surface. When rain appears imminent, all paving operations shall stop and all available personnel shall begin covering the surface of the unhardened concrete with the protective covering.

501-3.21 OPENING TO TRAFFIC. The Engineer shall decide when the pavement shall be opened to traffic. The pavement will not be opened to traffic until test specimens molded and cured in accordance with ASTM C 31 have attained a flexural strength of 550 pounds per square inch (3792 kPa) when tested in accordance with ASTM C 78. If such tests are not conducted, the pavement shall not be opened to traffic until 14 days after the concrete was placed. Prior to opening to traffic, the pavement shall be cleaned.

501-3.22 SURFACE TOLERANCES. Extreme care must be exercised in all phases of the operation to assure the pavement will pass the specified tolerances. The following tolerances are applicable:

a. Lateral deviation from established alignment of the pavement edge shall not exceed plus or minus 0.10 foot (30 mm) in any lane.

b. Vertical deviation from established grade shall not exceed plus or minus 0.04 foot (120 cm) at any point.

c. Surface smoothness deviations shall not exceed 1/4 inch (6 mm) from a 16-foot (4.8 m) straightedge placed in any direction, including placement along and spanning any pavement joint or edge.

501-3.23 TOLERANCE IN PAVEMENT THICKNESS. Concrete will be accepted for thickness on a lot basis. A lot will consist of [ ] square yards (square meters). One core shall be taken at random by the Engineer in each lot. When the measurement of the core from a lot is not deficient more than 0.2 inch (5 mm) from the plan thickness, full payment will be made. When such measurement is deficient more than 0.2 inch (5 mm) and not more than 1.0 inch (25 mm) from the plan thickness, two additional cores shall be taken at random and used in determining the average thickness for that lot. An adjusted unit price, as provided in paragraph 501-5.2, will be paid for the lot. The thickness of the pavement shall be determined by average caliper measurement of cores tested in accordance with ASTM C 174.

In calculating the average thickness of the pavement, measurements which are in excess of the specified thickness by more than 0.2 inch (5 mm) shall be considered as the specified thickness plus 0.2 inch (5 mm), and measurements which are less than the specified thickness by more than 1.0 inch (25 mm) shall not be included in the average.

When the measurement of any core is less than the specified thickness by more than 1.0 inch (25 mm), the actual thickness of the pavement in this area shall be determined by taking additional cores at not less than 10-foot (3 m) intervals parallel to the centerline in each direction from the affected location, until in each direction a core is found which is not deficient by more than 1.0 inch (25 mm). Areas found deficient in thickness by more than 1.0 inch (25 mm) shall be evaluated by the Engineer and, if the deficient areas warrant removal, they shall be removed and replaced with concrete of the thickness shown on the plans. Exploratory cores for deficient thickness will not be used in averages for adjusted unit price. Core holes shall be filled with non-shrink grout.

* *

The lot size shall be equal to that specified for flexural strength determinations under paragraph 501-3.7 (alternate method) and should not exceed a day's pour.

* *

METHOD OF MEASUREMENT

501-4.1 The quantity to be paid for shall be the number of square yards (square meters) of **[plain][reinforced]** pavement in place, completed and accepted, less deductions as hereinafter required for deficient thickness.

BASIS OF PAYMENT

501-5.1 General. The accepted quantities of concrete pavement will be paid for at the contract unit price per square yard (square meters) which price and payment shall be full compensation for furnishing and placing all materials, including any dowels, steel reinforcement and joint material texturing, except for saw-cut grooving, provided, however, that for any pavement found deficient in thickness by more than 0.2 inch (5 mm), but not more than 1.0 inch (25 mm) only the reduced price stipulated below shall be paid.

No additional payment over the unit contract bid price shall be made for any pavement which has an average thickness in excess of that shown on the plans.

Payment will be made under:

Item P-501-5.1	Portland Cement Concrete Pavement--per square yard (per square meter).
Item P-501-5.1	Saw-Cut Grooving--per square foot (per square meter).

501-5.2 Price Adjustment

a. Thickness Adjustment. Where the average thickness of pavement is deficient in thickness by more than 0.2 inch (5 mm) but not more than 1.0 inch (25 mm), payment will be made at an adjusted price as specified in Table 3.

TABLE 3. PAVEMENT DEFICIENCY

Deficiency in Thickness Determined by Cores		Proportional Part of Contract Price Allowed (Percent)
(Average of 3 tests)		
inches	mm	
0.00 to 0.20	0.00 to 5	100
0.21 to 0.30	5 to 8	80
0.31 to 0.40	8 to 10	72
0.41 to 0.50	10 to 13	68
0.51 to 0.75	13 to 19	57
0.76 to 1.00	19 to 25	50

When the thickness of pavement is deficient by more than 1 inch (25 mm) and, in the judgment of the Engineer, the area of such deficiency should not be removed and replaced, there shall be no payment for the area retained.

* *

The following optional paragraph applies when concrete is accepted for flexural strength as described under notes to the Engineer in paragraph 501-3.7. Delete paragraph below if not applicable.

* *

b. Flexural Strength Adjustment. When any pay factor for a lot of concrete is less than 1.0, payment for the material in that lot shall be made at a reduced price arrived at by multiplying the contract price per unit of measurement by the appropriate pay factor. If pay factors for pavement thickness deficiency and flexural strength deficiency are both used for any given lot, the reduced price will be determined by successively multiplying the contract unit price by both pay factors.

TESTING REQUIREMENTS

ASTM C 31	Making and Curing Concrete Test Specimens in the Field
ASTM C 39	Compressive Strength of Cylindrical Concrete Specimens
ASTM C 78	Test for Flexural Strength of Concrete (Using Simple Beam with Third-Point Loading)
ASTM C 131	Test for Resistance to Abrasion of Small Size Coarse Aggregate by Use of the Los Angeles Machine
ASTM C 138	Test for Unit Weight, Yield, and Air Content (Gravimetric) of Concrete
ASTM C 143	Test for Slump of Portland Cement Concrete
ASTM C 172	Sampling Fresh Concrete
ASTM C 173	Test for Air Content of Freshly Mixed Concrete by the Volumetric Method
ASTM C 174	Measuring Length of Drilled Concrete Cores
ASTM C 231	Test for Air Content of Freshly Mixed Concrete by the Pressure Method
ASTM C 311	Sampling and Testing Fly Ash for Use as an Admixture in Portland Cement Concrete
ASTM C 535	Test for Resistance to Abrasion of Large Size Coarse Aggregate by Use of the Los Angeles Machine
AASHTO T 26	Quality of Water to be Used in Concrete

MATERIAL REQUIREMENTS

ASTM A 184	Specification for Fabricated Deformed Steel Bar Mats for Concrete Reinforcement
ASTM A 185	Specification for Welded Steel Wire Fabric for Concrete Reinforcement
ASTM A 497	Specification for Welded Deformed Steel Wire Fabric for Concrete Pavement
ASTM A 615	Specification for Deformed and Plain Billet-Steel Bars for Concrete Reinforcement

ASTM A 616	Specification for Rail-Steel Deformed and Plain Bars for Concrete Reinforcement
ASTM A 617	Specification for Axle-Steel Deformed and Plain Bars for Concrete Reinforcement
ASTM A 704	Specification for Welded Steel Plain Bar or Rod Mats for Concrete Reinforcement
ASTM C 33	Specification for Concrete Aggregates
ASTM C 94	Specification for Ready-Mixed Concrete
ASTM C 150	Specification for Portland Cement
ASTM C 171	Specification for Sheet Materials for Curing Concrete
ASTM C 260	Specification for Air-Entraining Admixtures for Concrete
ASTM C 309	Specification for Liquid Membrane-Forming Compounds
ASTM C 494	Specification for Chemical Admixtures for Concrete
ASTM C 595	Specification for Blended Hydraulic Cements
ASTM D 1751	Specification for Preformed Expansion Joint Fillers for Concrete Paving and Structural Construction (Nonextruding and Resilient Bituminous Types)
ASTM D 1752	Specification for Preformed Sponge Rubber and Cork Expansion Joint Fillers for Concrete Paving and Structural Construction
AASHTO M 254	Specification for Coated Dowel Bars

PART VII—MISCELLANEOUS

ITEM P-602 BITUMINOUS PRIME COAT

DESCRIPTION

602-1.1 This item shall consist of an application of bituminous material on the prepared base course in accordance with these specifications and in reasonably close conformity to the lines shown on the plans.

MATERIALS

602-2.1 BITUMINOUS MATERIAL. The types, grades, controlling specifications, and application temperatures for the bituminous materials are given in Table 1. The Engineer shall designate the specific material to be used.

TABLE 1. BITUMINOUS MATERIAL

Type and Grade	Specification	Application Temperatures [1]	
		Deg. F	Deg. C
Emulsified Asphalt			
SS-1, SS-1h-	ASTM D 977	70-160	20-70
MS-2, HFMS-1	ASTM D 977	70-160	20-70
CSS-1, CSS-1h	ASTM D 2397	70-160	20-70
CMS-2	ASTM D 2397	70-160	20-70
Cutback Asphalt			
RC-30	ASTM D 2028	80+	30+
RC-70	ASTM D 2028	120+	50+
RC-250	ASTM D 2028	165+	75+

[1] The maximum temperature for cutback asphalt shall be that at which fogging occurs.

CONSTRUCTION METHODS

602-3.1 WEATHER LIMITATIONS. The prime coat shall be applied only when the existing surface is dry or contains sufficient moisture to get uniform distribution of the bituminous material, when the atmospheric temperature is above 60° F (15° C), and when the weather is not foggy or rainy. The temperature requirements may be waived, but only when so directed by the Engineer.

602-3.2 EQUIPMENT. The equipment used by the Contractor shall include a self-powered pressure bituminous material distributor and equipment for heating bituminous material.

The distributor shall be designed, equipped, maintained, and operated so that bituminous material at even heat may be applied uniformly on variable widths of surface at the specified rate. The allowable variation from the specified rate shall not exceed 10 percent. Distributor equipment shall include a tachometer, pressure gages, volume-measuring devices or a calibrated tank, and a thermometer for measuring temperatures of tank contents. The distributor shall be self-powered and shall be equipped with a power unit for the pump and full circulation spray bars adjustable laterally and vertically.

A power broom and/or blower shall be provided for any required cleaning of the surface to be treated.

602-3.3 APPLICATION OF BITUMINOUS MATERIAL. Immediately before applying the prime coat, the full width of the surface to be primed shall be swept with a power broom to remove all loose dirt and other objectionable material.

The bituminous material including solvent shall be uniformly applied with a bituminous distributor at the rate of 0.25 to 0.50 gallons per square yard (1.20 to 2.40 liters per square meter) depending on the base course surface texture. The type of bituminous material and application rate shall be approved by the Engineer prior to application.

Following the application, the primed surface shall be allowed to dry not less than 48 hours without being disturbed or for such additional time as may be necessary to permit the drying out of the prime until it will not be picked up by traffic or equipment. This period shall be determined by the Engineer. The surface shall then be maintained by the Contractor until the surfacing has been placed. Suitable precautions shall be taken by the Contractor to protect the primed surface against damage during this interval, including supplying and spreading any sand necessary to blot up excess bituminous material.

602-3.4 BITUMINOUS MATERIAL CONTRACTOR'S RESPONSIBILITY. Samples of the bituminous materials that the Contractor proposes to use, together with a statement as to their source and character, must be submitted and approved before use of such material begins. The Contractor shall require the manufacturer or producer of the bituminous materials to furnish material subject to this and all other pertinent requirements of the contract. Only satisfactory materials, so demonstrated by service tests, shall be acceptable.

The Contractor shall furnish vendor's certified test reports for each carload, or equivalent, of bituminous material shipped to the project. The report shall be delivered to the Engineer before permission is granted for use of the material. The furnishing of the vendor's certified test report for the bituminous material shall not be interpreted as basis for final acceptance. All such test reports shall be subject to verification by testing samples of materials received for use on the project.

602-3.5 FREIGHT AND WEIGH BILLS. Before the final estimate is allowed, the Contractor shall file with the Engineer receipted bills when railroad shipments are made, and certified weigh bills when materials are received in any other manner, of the bituminous materials actually used in the construction covered by the contract. The Contractor shall not remove bituminous material from the tank car or storage tank until the initial outage and temperature measurements have been taken by the Engineer, nor shall the car or tank be released until the final outage has been taken by the Engineer.

Copies of freight bills and weigh bills shall be furnished to the Engineer during the progress of the work.

METHOD OF MEASUREMENT

602-4.1 The bituminous material for prime coat shall be measured by the **[gallon (liter)][ton(kg)]**. Volume shall be corrected to the volume at 60° F (15° C) in accordance with ASTM D 1250 for cutback asphalt, and Table IV-3 of The Asphalt Institute's Manual MS-6 for emulsified asphalt.

BASIS OF PAYMENT

602-5.1 Payment shall be made at the contract unit price per **[gallon (liter)][ton (kg)]** for bituminous prime coat. This price shall be full compensation for furnishing all materials and for all preparation, delivering, and applying the materials, and for all labor, equipment, tools, and incidentals necessary to complete this item.

Payment will be made under:

Item P-602-5.1	Bituminous Prime Coat--per **[gallon (liter)][ton (kg)]**

MATERIAL REQUIREMENTS

ASTM D 977	Emulsified Asphalt
ASTM D 2028	Asphalt, Cutback (Rapid Curing Grade)
ASTM D 2397	Cationic Emulsified Asphalt

TESTING REQUIREMENTS

ASTM D 1250	Petroleum Measurement Tables
Asphalt Institute Manual MS-6 Table IV-3	Temperature-Volume Corrections for Emulsified Asphalts

ITEM P-603 BITUMINOUS TACK COAT

DESCRIPTION

603-1.1 This item shall consist of preparing and treating a bituminous or concrete surface with bituminous material in accordance with these specifications and in reasonably close conformity to the lines shown on the plans.

MATERIALS

603-2.1 BITUMINOUS MATERIALS. The bituminous material shall be either cutback asphalt, emulsified asphalt, or tar and shall conform to the requirements of Table 1. The type, grade, controlling specification, and application temperature of bituminous material to be used shall be specified by the Engineer.

TABLE 1. BITUMINOUS MATERIAL

Type and Grade	Specification	Application Temperature	
		Deg. F	Deg. C
Emulsified Asphalt			
SS-1, SS-1h	ASTM D 977	75-130	25-55
CSS-1, CSS-1h	ASTM D 2397	75-130	25-55
Cutback Asphalt			
RC-70	ASTM D 2028	120-160	50-70
Tar			
RTCB 5, RTCB 6	AASHTO M 52	60-120	15-50

CONSTRUCTION METHODS

603-3.1 WEATHER LIMITATIONS. The tack coat shall be applied only when the existing surface is dry and the atmospheric temperature is above 60° F (15° C). The temperature requirements may be waived, but only when so directed by the Engineer.

603-3.2 EQUIPMENT. The Contractor shall provide equipment for heating and applying the bituminous material.

The distributor shall be designed, equipped, maintained, and operated so that bituminous material at even heat may be applied uniformly on variable widths of surface at the specified rate. The allowable variation from the specified rate shall not exceed 10 percent. Distributor equipment shall include a tachometer, pressure gages, volume-measuring devices or a calibrated tank, and a thermometer for measuring temperatures of tank contents. The distributor shall be self-powered and shall be equipped with a power unit for the pump and full circulation spray bars adjustable laterally and vertically.

A power broom and/or blower shall be provided for any required cleaning of the surface to be treated.

603-3.3 APPLICATION OF BITUMINOUS MATERIAL. Immediately before applying the tack coat, the full width of surface to be treated shall be swept with a power broom and/or airblast to remove all loose dirt and other objectionable material.

Emulsified asphalt shall be diluted by the addition of water when directed by the Engineer and shall be applied a sufficient time in advance of the paver to ensure that all water has evaporated before any of the overlying mixture is placed on the tacked surface.

The bituminous material including vehicle or solvent shall be uniformly applied with a bituminous distributor at the rate of 0.05 to 0.15 gallons per square yard (0.24 to 0.72 liters per square meter) depending on the condition of the existing surface. The type of bituminous material and application rate shall be approved by the Engineer prior to application.

Following the application, the surface shall be allowed to cure without being disturbed for such period of time as may be necessary to permit drying out and setting of the tack coat. This period shall be determined by the Engineer. The surface shall then be maintained by the Contractor until the next course has been placed. Suitable precautions shall be taken by the Contractor to protect the surface against damage during this interval.

603-3.4 BITUMINOUS MATERIAL-CONTRACTOR'S RESPONSIBILITY. Samples of the bituminous material that the Contractor proposes to use, together with a statement as to its source and character, must be submitted and approved before use of such material begins. The Contractor shall require the manufacturer or producer of the bituminous material to furnish material subject to this and all other pertinent requirements of the contract. Only satisfactory materials so demonstrated by service tests, shall be acceptable.

The Contractor shall furnish the vendor's certified test reports for each carload, or equivalent, of bituminous material shipped to the project. The report shall be delivered to the Engineer before permission is granted for use of the material. The furnishing of the vendor's certified test report for the bituminous material shall not be interpreted as a basis for final acceptance. All such test reports shall be subject to verification by testing samples of material received for use on the project.

603-3.5 FREIGHT AND WEIGH BILLS. Before the final estimate is allowed, the Contractor shall file with the Engineer receipted bills when railroad shipments are made, and certified weigh bills when materials are received in any other manner, of the bituminous materials actually used in the construction covered by the contract. The Contractor shall not remove bituminous material from the tank car or storage tank until the initial outage and temperature measurements have been taken by the Engineer, nor shall the car or tank be released until the final outage has been taken by the Engineer. Copies of freight bills and weigh bills shall be furnished to the Engineer during the progress of the work.

METHOD OF MEASUREMENT

603-4.1 The bituminous material for tack coat shall be measured by the **[gallon (liter)] [ton (kg)]**. Volume shall be corrected to the volume at 60° F (15° C) in accordance with ASTM D 1250 for cutback asphalt, ASTM D 633 for tar, and Table IV-3 of The Asphalt Institute's Manual MS-6 for emulsified asphalt. Water added to emulsified asphalt will not be measured for payment.

BASIS OF PAYMENT

603-5.1 Payment shall be made at the contract unit price per **[gallon (liter)] [ton (kg)]** of bituminous material. This price shall be full compensation for furnishing all materials, for all preparation, delivery, and application of these materials, and for all labor, equipment, tools, and incidentals necessary to complete the item.

Payment will be made under:

Item P-603-5.1	Bituminous Tack Coat--per **[gallon (liter)][ton (kg)]**

MATERIAL REQUIREMENTS

ASTM D 633	Volume Correction Table for Road Tar
ASTM D 977	Emulsified Asphalt

ASTM D 1250	Petroleum Measurement Tables
ASTM D 2028	Liquid Asphalt (Rapid-Curing Type)
ASTM D 2397	Cationic Emulsified Asphalt
AASHTO M 52	Tar for Use in Road Construction
Asphalt Institute Manual MS-6 Table IV-3	Temperature-Volume Corrections for Emulsified Asphalts

ITEM P-605 JOINT SEALING FILLER

DESCRIPTION

605-1.1 This item shall consist of providing and installing a resilient and adhesive joint sealing filler capable of effectively sealing joints and cracks in pavements.

MATERIALS

605-2.1 JOINT SEALERS. Joint sealing materials shall meet the requirements of [ ].

[Each lot or batch of sealing compound shall be delivered to the jobsite in the manufacturer's original sealed contained. Each container shall be marked with the manufacturer's name, batch or lot number, and the safe heating temperature and shall be accompanied by the manufacturer's certification stating that the compound meets the requirements of this specification.]

[Each lot of preformed joint sealer delivered to the jobsite shall be accompanied by the manufacturer's certification stating that it meets the requirements of this specification.]

* *

The Engineer shall specify one or more of the following:

Fed. Spec. SS-S-200 - Sealing Compounds, Two-Component, Elastomeric, Polymer Type, Jet-Fuel-Resistant, Cold Applied.

ASTM D 1854 - Jet-Fuel-Resistant Concrete Joint Sealer, Hot-Poured Elastic Type

ASTM D 2628 - Preformed Polychloroprene Elastomeric Joint Seats for Concrete Pavements

ASTM D 3405 - Joint Sealants, Hot-Poured, for Concrete and Asphalt Pavements

ASTM D 3406 - Joint Sealants, Hot-Poured, Elastometric-Type, for Portland Cement Concrete Pavements

ASTM D 3569 - Joint Sealants, Hot-Poured, Elastometric, Jet-Fuel-Resistant type, for Portland Cement Concrete Pavements

ASTM D 3581 - Joint Sealant, Hot-Poured, Jet-Fuel-Resistant Type, for Portland Cement Concrete and Tar-Concrete Pavements

If preformed joint sealer is specified, the manufacturer shall certify that the performed seal will exert a minimum pressure of 3.0 pounds per square inch (21 kPa) when compressed to 80 percent of nominal width and a maximum of 25.0 pounds per square inch (172 kPa) when compressed to 50 percent of nominal width.

Paragraph 2.2 applies only when preformed sealants are specified. Delete when not applicable.

* *

605-2.2 LUBRICANT. Lubricant for installation of preformed joint seal shall be a one-component polychloroprene compound containing only soluble phenolic resins blended together with anti-oxidants and acid acceptors in aromatic hydrocarbon solvent mixture and shall meet the following requirements:

	Requirements	ASTM
Average weight per gallon, pounds	7.8	
Solids content, percent by weight	22–28	D1644, Method A
Film strength, psi	2,300 min.	D412
Elongation, percent	750 min.	D412

Each shipment of lubricant shall be delivered to the jobsite in the manufacturer's original sealed container. Each container shall be marked with the manufacturer's name, batch or lot number, and the date of manufacture and shall be accompanied by the manufacturer's certification stating that the lubricant meets the requirements of the specification.

This lubricant shall be stored at a temperature between 50° F (10° C) and 80° F (30° C) and shall be used within 270 days of its manufacture.

CONSTRUCTION METHODS

605-3.1 TIME OF APPLICATION. Joints shall be sealed as soon after completion of the curing period as feasible and before the pavement is opened to traffic, including construction equipment. The pavement temperature shall be above **[40° F (4° C)][(50° F (10° C)]** at the time of installation of the **[preformed joint seal][poured joint sealing material]**.

* *

Specify 40° F (4° C) for preformed seal and 50° (10° C) F for poured seals.

If the pavement must be opened to traffic prior to placement of the sealant, this paragraph should be modified to require the Contractor to temporarily fill the joint with a jute or nylon rope immediately after the joint is sawed. The rope should be slightly larger than the joint and should be forced into the joint so that the top of the rope is 1/8 inch (3 mm) below the pavement surface. The rope shall be removed immediately prior to cleaning.

* *

605-3.2 PREPARATION OF JOINTS. Immediately before sealing, the joints shall be thoroughly cleaned of all laitance, curing compound, and other foreign material. Cleaning shall be accomplished by **[sandblasting] [wire brushing] [high pressure water blast]**. Upon completion of cleaning, the joints shall be blown out with compressed air. The joint faces shall be surface dry when the seal is applied.

Prior to resealing joints, the existing joint material shall be removed to the depth as shown on the plans. If joint sealer other than that originally used is specified, all existing joint sealer shall be removed.

* *

Sandblasting or wire brushing is the recommended method of cleaning since the joints can be primed immediately after the cleaning.

* *

605-3.3 INSTALLATION OF SEALANTS. Joints shall be inspected for proper width, depth, alignment, and preparation, and shall be approved by the Engineer before sealing is allowed. Sealants shall be installed in accordance with the following requirements:

[Hot Poured Sealants. The joint sealant shall be applied uniformly solid from bottom to top and shall be filled without formation of entrapped air or voids. A backing material shall be placed as shown on the plans and shall be nonadhesive to the concrete or the sealant material. The heating kettle shall be an indirect heating type,

constructed as a double boiler. A positive temperature control and mechanical agitation shall be provided. The sealant shall not be heated to more than 20° F (-11° C) below the safe heating temperature. The safe heating temperature can be obtained from the manufacturer's shipping container. A direct connecting pressure type extruding device with nozzles shaped for insertion into the joint shall be provided. Any sealant spilled on the surface of the pavement shall be removed immediately.]

[Cold Applied Sealants. Cold applied joint sealing compound shall be applied by means of pressure equipment that will force the sealing material to the bottom of the joint and completely fill the joint without spilling the material on the surface of the pavement. A backing material shall be placed as shown on the plans and shall be nonadhesive to the concrete or the sealant material. Sealant which does not bond to the concrete surface of the joint walls, contains voids, or fails to set to a tack-free condition will be rejected and replaced by the Contractor at no additional cost. Before sealing the joints, the Contractor shall demonstrate that the equipment and procedures for preparing, mixing, and placing the sealant will produce a satisfactory joint seal. This shall include the preparation of two small batches and the application of the resulting material.]

* *

The use of a backup material or bond breaker in the bottom of the joint to be filled is recommended to control the depth of the sealant, to achieve the desired shape factor, and to support the sealant against indentation and sag. Backup materials and bond breakers should be compatible with the sealant, should not adhere to the sealant, should be compressible without extruding the sealant, and should recover to maintain contact with the joint faces when the joint is open.

* *

[Preformed Elastomeric Joint Seals. Preformed joint sealer shall be placed using equipment capable of installing the sealer in the upright position, without cutting, nicking, distorting, or otherwise damaging the seal. Lubricant shall be applied to the concrete or the preformed seal, or both, and the seal shall be installed in a substantially compressed condition and at the depth below the surface of the pavement as shown in the plans. The method of installation shall be such that the joint sealer will not be stretched more than 5 percent of the minimum theoretical length, or compressed more than 2 percent. The method of installation shall be checked for stretching or compression, using transverse joint sealer. The check shall consist of installing sealer in five joints of at least 25 feet (7.5 m) in length, removing the sealer immediately after installation, and checking the length. This check may be modified by premarking or precutting the sealer to length prior to installation if this is compatible with the equipment being used. If the measured length of any of these five sealers indicated that the sealer is stretched or compressed beyond these limits, the installation shall be modified to correct the situation. Once satisfactory sealing operations have started, one joint length per every hundred shall be removed and checked. If the limits are exceeded, the joint sealers on either side should be removed until the condition disappears. The affected joints shall be resealed in a satisfactory manner at no cost to the owner, and the method of installation shall be checked again for satisfactory procedure. The seal shall be installed in the longest practicable lengths in longitudinal joints and shall be cut at the joint intersections for continuous installation of the seal in the transverse joints.]

* *

The Engineer should select either hot poured, cold applied, or preformed sealant and include the appropriate paragraph in the specifications.

* *

METHOD OF MEASUREMENT

605-4.1 Joint sealing material shall be measured by the **[gallon (liter)] [pound (kg)] [linear foot (meter)]** of sealant in place, complete, and accepted.

BASIS OF PAYMENT

605-5.1 Payment for joint sealing material shall be made at the contract unit price per **[gallon (liter)] [pound (kg)] [linear foot (meter)]**. The price shall be full compensation for furnishing all materials, for all preparation, delivering, and placing of these materials, and for all labor, equipment, tools, and incidentals necessary to complete the item.

Payment will be made under:

Item P-605-5.1	Joint Sealing Filler - per gallon (liter)
Item P-605-5.2	Joint Sealing Filler - per pound (kg)
Item P-605-5.3	Preformed Sealer - per linear foot (meter)

TESTING REQUIREMENTS

ASTM D 412	Tests for Rubber Properties in Tension
ASTM D 1644	Tests for Nonvolatile Content of Varnishes

MATERIAL REQUIREMENTS

ASTM D 1854	Jet-Fuel-Resistant Concrete Joint Sealer, Hot-Poured Elastic Type
ASTM D 2628	Preformed Polychloroprene Elastomeric Joint Seals for Concrete Pavements
ASTM D 3405	Joint Sealants, Hot-Poured, for Concrete and Asphalt Pavements
ASTM D 3406	Joint Sealants, Hot-Poured, Elastomeric-Type, for Portland Cement Concrete Pavements
ASTM D 3569	Joint Sealant, Hot-Poured, Elastometric, Jet-Fuel-Resistant Type, for Portland Cement Concrete Pavements
ASTM D 3581	Joint Sealant, Hot-Poured, Jet-Fuel-Resistant Type, for Portland Cement Concrete and Tar-Concrete Pavements
Fed. Spec. SS-S-200	Sealing Compounds, Two Component, Elastomeric, Polymer Type, Jet-Fuel Resistant, Cold Applied

ITEM P-606 ADHESIVE COMPOUNDS, TWO-COMPONENT, FOR SEALING WIRE AND LIGHTS IN PAVEMENT

DESCRIPTION

606-1.1 This specification covers two types of material; a liquid suitable for sealing electrical wire in saw cuts in pavement and for sealing light fixtures or bases in pavement, and a paste suitable for embedding light fixtures in the pavement. Both types of material are two-component filled formulas with the characteristics specified in paragraph 606-2.4. Materials supplied for use with bituminous concrete pavements must be formulated so they are compatible with the bituminous concrete.

* *

If the material is to be used on bituminous concrete pavements and it is not formulated for this use, cracking and separation of the material from sawed wireway kerfs and around light fixtures may occur.

* *

EQUIPMENT AND MATERIALS

606-2.1 CURING. When prewarmed to 77° F (25° C), mixed, and placed in accordance with manufacturer's directions, the materials shall cure at temperatures of 45° F (7° C) or above without the application of external heat.

606-2.2 STORAGE. The adhesive components shall not be stored at temperatures over 86° F (30° C).

606-2.3 CAUTION. Installation and use shall be in accordance with the manufacturer's recommended procedures. Avoid prolonged or repeated contact with skin. In case of contact, wash with soap and flush with water. If taken internally, call doctor. Keep away from heat or flame. Avoid vapor. Use in well-ventilated areas. Keep in cool place. Keep away from children.

606-2.4 CHARACTERISTICS. When mixed and cured in accordance with the manufacturer's directions, the materials shall have the following properties shown in Table 1.

SAMPLING, INSPECTION, AND TEST PROCEDURES

606-3.1 TENSILE PROPERTIES. Tests for tensile strength and elongation shall be conducted in accordance with ASTM D 638.

606-3.2 EXPANSION. Tests for coefficients of linear and cubical expansion shall be conducted in accordance with ASTM D 1168, Method B, except that mercury shall be used instead of glycerine. The test specimen(s) shall be mixed in the proportions specified by the manufacturer, and cured in a glass tub approximately 2 inches (5 0 mm) long by 3/8 inch (9 mm) in diameter. The interior of the tube shall be precoated with a silicone mold release agent. The hardened sample shall be removed from the tube and aged at room temperature for 1 week before conducting the test. The test temperature range shall be from 35° F (2° C) to 140° F (60° C).

606-3.3 TEST FOR DIELECTRIC STRENGTH. Test for dielectric strength shall be conducted in accordance with ASTM D 149 for sealing compounds to be furnished for sealing electrical wires in pavement.

TABLE 1. PROPERTY REQUIREMENTS

Physical or Electrical Property	Minimum	Maximum	ASTM Method
Tensile			
Portland Cement Concrete	1,000 psi (70 kg/sq.cm)		D 638
Bituminous Concrete	500 psi (35 kg/sq.cm)		
Elongation			
Portland Cement Concrete	8% [1]		D 638
Bituminous Concrete	50%		D 638
Coef. of cub. exp. cu. cm/cu. cm/degree C	0.00090	0.00120	D 1168
Coef. of lin. exp. cm/cm/degree C	0.00030	0.00040	D 1168
Dielectric strength, short time test	350 volts/mil.		D 149
Arc resistance	125 secs.		D 495
Adhesion to steel	1,000 psi (70 kg/sq.cm)		
Adhesion to portland cement concrete	200 psi (14 kg/sq.cm)		
Adhesion to asphalt concrete	(no test available)		

[1] 20% or more (without filler) for formulations to be supplied for areas subject to freezing.

603.4 TEST FOR ARC RESISTANCE. Test for arc resistance shall be conducted in accordance with ASTM D 495 for sealing compounds to be furnished for sealing electrical wires in pavement.

606-3.5 TEST FOR ADHESION TO STEEL. The ends of two smooth, clean, steel specimens of convenient size (1 inch by 1 inch by 6 inches) (25 by 25 by 150 mm) would be satisfactory) are bonded together with adhesive mixture and allowed to cure at room temperature for a period of time to meet formulation requirements and then tested to failure on a Riehle (or similar) tensile tester. The thickness of adhesive to be tested shall be 1/4 inch (6 mm).

606-3.6 ADHESION TO PORTLAND CEMENT CONCRETE

a. Concrete Test Block Preparation. The aggregate grading shall be as shown in Table 2.

The coarse aggregate shall consist of crushed rock having a minimum of 75% of the particles with at least one fractured face and having a water absorption of not more than 1.5%. The fine aggregate shall consist of crushed sand manufactured from the same parent rock as the coarse aggregate. The concrete shall have a water-cement ratio of 5.5 gallons (21 liters) of water per bag of cement, a cement factor of 6, plus or minus 0.5, bags of cement per cubic yard (0.76 cubic meter) of concrete, and a slump of 2-1/2 inches, plus or minus 1/2 inch (60 mm plus or minus 12 mm). The ratio of fine aggregate to total aggregate shall be approximately 40% by solid volume. The air content shall be 5.0%, plus or minus 0.5%, and it shall be obtained by the addition to the batch of an air-entraining admixture such as vinsol resin. The mold shall be of metal and shall be provided with a metal base plate. Means shall be provided for securing the base plate to the mold. The assembled mold and base plate shall be watertight and shall be oiled with mineral oil before use. The inside measurement of the mold shall be such that several 1-inch by 2-inch by 3-inch (25 by 50 by 75 mm) test blocks can be cut from the specimen with a concrete saw having a diamond blade. The concrete shall be prepared and cured in accordance with ASTM C 192.

Table 2. AGGREGATE FOR BOND TEST BLOCKS

Type	Sieve Size	Percent Passing
Coarse Aggregate	¾ inch (19.0 mm)	97 to 100
	½ inch (12.5 mm)	63 to 69
	⅜ inch (9.5 mm)	30 to 36
	No. 4 (4.75 mm)	0 to 3
Fine Aggregate	No. 4 (4.75 mm)	100
	No. 8 (2.36 mm)	82 to 88
	No. 16 (1.18 mm)	60 to 70
	No. 30 (600 micro-m)	40 to 50
	No. 50 (300 micro-m)	16 to 26
	No. 100 (150 micro-m)	5 to 9

b. Bond Test. Prior to use, oven-dry the test blocks to constant weight at a temperature of 220 to 230° F (104 to 110° C), cool to room temperature, 73.4 plus or minus 3° F (23 plus or minus 1.6° C), in a desiccator, and clean the surface of the blocks of film or powder by vigorous brushing with a stiff-bristled fiber brush. Two test blocks shall be bonded together on the 1-inch by 3-inch (25 by 75 mm) sawed face with the adhesive mixture and allowed to cure at room temperature for a period of time to meet formulation requirements and then tested to failure in a Riehle (or similar) tensile tester. The thickness of the adhesive to be tested shall be 1/4 inch (6 mm).

606-3.7 COMPATIBILITY WITH ASPHALT CONCRETE. Test for compatibility with asphalt in accordance with ASTM D 3407.

606-3.8 ADHESIVE COMPOUNDS - CONTRACTOR'S RESPONSIBILITY. The Contractor shall furnish the vendor's certified test reports for each batch of material delivered to the project. The report shall certify that the material meets specification requirements and is suitable for use with **[portland cement concrete] [bituminous concrete]** pavements. The report shall be delivered to the Engineer before permission is granted for use of the material. In addition the Contractor shall obtain a statement from the supplier or manufacturer which guarantees the material for one year. The supplier or manufacturer shall furnish evidence that the material has performed satisfactorily on other projects.

606-3.9 APPLICATION. Adhesive shall be applied on a dry, clean surface, free of grease, dust, and other loose particles. The method of mixing and application shall be in strict accordance with the manufacturer's recommendations.

* *

Installation methods such as surface preparation, mixing ratios, and pot life are as important to satisfactory performance as the properties of the material itself. Therefore, the Engineer may wish to require a manufacturer's representative to be present during the initial installation of the material to ensure the installation procedures are in accordance with the manufacturer's directions.

* *

METHOD OF MEASUREMENT

606-4.1 The adhesive compound shall be measured by the **[pound (kg)] [gallon (l)]** of adhesive as specified, in place, complete and accepted. When required in the installation of an in-runway lighting system or portion thereof, no measurement will be made for direct payment of adhesive, as the cost of furnishing and installing shall be considered as a subsidiary obligation in the completion of the installation.

BASIS OF PAYMENT

606-5.1 Payment shall be made, where applicable, at the contract unit price per **[pound (kg)] [gallon (l)]** for the adhesive. This price shall be full compensation for furnishing all materials, and for all preparation, delivering, and application of these materials, and for all labor, equipment, tools, and incidentals necessary to complete the item.

Item P-606-5.1	Adhesive Compound - per **[pound (kg)] [gallon (l)]**

TESTING REQUIREMENTS

ASTM C 192	Making and Curing Concrete Compression and Flexure Test Specimens in the Laboratory.
ASTM D 149	Tests for Dielectric Breakdown Voltage and Dielectric Strength of Electrical Insulating Materials at Commercial Power Frequencies.
ASTM D 495	Test for High-Voltage, Low-Current, Arc Resistance of Solid Electrical Insulating Materials
ASTM D 638	Test for Tensile Properties of Plastics
ASTM D 1168	Testing Hydrocarbon Waxes Used for Electrical Insulation
ASTM D 3407	Joint Sealants, Hot-Poured, For Concrete and Asphalt Pavements

ITEM P-609 SEAL COATS AND BITUMINOUS SURFACE TREATMENTS

DESCRIPTION

609-1.1 This item shall consist of a bituminous surface treatment as a wearing course composed of **[a single application][multiple applications]** of bituminous material and aggregate cover placed on the prepared primed base or properly cured wearing surface, in accordance with these specifications, and shall conform to the dimensions and typical cross section shown on the plans.

609-1.2 QUANTITIES OF MATERIALS PER SQUARE YARD. The approximate amounts of materials per square yard (square meter) for the bituminous surface treatment shall be as provided in Table 1 for the treatment specified on the plans or in the special provision. The exact amounts to be used shall be determined by the Engineer.

TABLE 1. QUANTITIES OF MATERIALS

Application No.	Quantity of Aggregate lb/yd^2 (kg/m^2)	Quantity of Asphalt gal/yd^2 (l/m^2)	Type of Asphalt [1]
1	40–50 (21.7–27.1)	0.35–0.45 (1.58–2.03)	Asphalt Cement
		0.40–0.50 (1.81–2.26)	Emulsified Asphalt
2	20–25 (10.9–13.6)	0.15–0.25 (0.68–1.13)	Asphalt Cement
		0.20–0.35 (0.90–1.58)	Emulsified Asphalt
3	15–20 (8.1–10.9)	0.15–0.20 (0.68–0.90)	Emulsified Asphalt

[1] See Table 3 for grades of asphalt and spraying temperatures.

* *

The quantities of asphalt shown in Table 1 cover the average range of conditions that include primed granular bases and old pavement surfaces. The quantities and types of materials should take into consideration local conditions and experience.

The lower application rates shown in Table 1 should be used for aggregate having gradations on the fine side of the specified limits. The higher application rates should be used for aggregate having gradations on the coarse side of the specified limits.

The asphalt content selected should reflect the condition of the pavement. If the pavement is highly oxidized, badly cracked, or coarse more asphalt should be used.

* *

MATERIALS

609-2.1 AGGREGATE MATERIALS. The aggregate material shall be either crushed stone, crushed gravel, or crushed slag. The cover material shall be screenings; sand may be used when specified.

If the material is to be crushed stone, it shall be manufactured from sound, hard, durable rock of accepted quality and crushed to specification size. All strata, streaks, and pockets of clay, dirt, sandstone, soft rock, or other unsuitable material accompanying the sound rock shall be discarded and not allowed to enter the crusher.

If the material is to be crushed gravel, it shall consist of hard, durable, fragments of stone or gravel of accepted quality and crushed to specification size. All strata, streaks, and pockets of sand, excessively fine gravel, clay, or other unsuitable material including all stones, rocks, and boulders of inferior quality shall be discarded and not allowed to enter the crusher. The crushing of the gravel shall result in a product in which the material retained on the separate No. 4, 3/8 inch, and 1/2 inch (4.75 mm, 9 mm, and 12 mm) sieves shall have at least 75% of particles with at least one fractured face.

Crushed slag shall be air-cooled, blast furnace slag, reasonably uniform in density and quality, and shall weigh not less than 70 pounds per cubic foot (1.12 mg/cubic meter) as determined by ASTM C 29.

The crushed aggregate shall not contain more than 8%, by weight, of elongated or flat pieces and shall be free from wood, roots, vegetable, organic, or other extraneous matter. The crushed coarse aggregate shall have a percentage of wear not more than 40 at 500 revolutions, as determined by ASTM C 131.

The aggregate shall show no evidence of disintegration nor show a total loss greater than 12% when subjected to five cycles of the sodium sulphate accelerated soundness test specified in ASTM C 88.

The crushed aggregate for the applications shall meet the requirements for gradation given in Table 2 when tested in accordance with ASTM C 136.

TABLE 2. REQUIREMENTS FOR GRADATION OF AGGREGATE

Aggregate for first application	
Sieve Designation (square openings)	Percentage by Weight Passing Sieves
1 inch (25.0 mm)	100
¾ inch (19.0 mm)	90–100
½ inch (12.5 mm)	20–55
⅜ inch (9.5 mm)	0–15
No. 4 (4.75 mm)	0–5
Aggregate for second application	
Sieve Designation (square openings)	Percentage by Weight Passing Sieves
½ inch (12.5 mm)	100
⅜ inch (9.5 mm)	85–100
No. 4 (4.75 mm)	10–30
No. 8 (2.36 mm)	0–10
No. 16 (1.18 mm)	0–5
Aggregate for third application	
Sieve Designation (square openings)	Percentage by Weight Passing Sieves
⅜ inch (9.5 mm)	100
¼ inch (6.2 mm)	90–100
No. 4 (4.75 mm)	60–85
No. 8 (2.36 mm)	0–25
No. 16 (1.18 mm)	0–5
No. 200 (0.075 mm)	0–2

The gradations in the table represent the limits which shall determine suitability of aggregate for use for the specified applications from the sources of supply. The final gradations decided on, within the limits designated in the table, shall be uniformly graded from coarse to fine.

The cover aggregate used in the third application shall be a light- colored material whose color and reflectivity shall be approved by the Engineer.

The aggregate to be used shall show no evidence of stripping or swell when tested in accordance with AASHO T 182 and T 101. The use of antistrip agents for the control of stripping shall be used if necessary.

609-2.2 BITUMINOUS MATERIAL. The types, grades, controlling specifications, and application temperatures for the bituminous materials are shown in Table 3. The Engineer shall designate the specific material to be used.

TABLE 3. BITUMINOUS MATERIALS

Type and Grade	Specification	Spraying Temperature [1]	
		Deg. F	Deg. C
Asphalt Cement			
AC 2.5, AC-5	ASTM D 3381	275+	135+
AR-1000, 2000	ASTM D 3381	280+	140+
120-150, 200-300	ASTM D 946	270+	130+
Emulsified Asphalt			
RS-1	ASTM D 977	70-140	20-60
RS-2	ASTM D 977	125-175	50-80
MS-1, HFMS-1	ASTM D 977	70-160	20-70
CRS-1	ASTM D 2397	125-175	50-80
CRS-2	ASTM D 2397	125-175	50-80

[1] The maximum temperature for asphalt cements shall be below that at which fogging occurs.

CONSTRUCTION METHODS

609-3.1 WEATHER LIMITATIONS. Bituminous material shall be applied only when the existing surface is dry and the atmospheric temperature is above 60° F (15° C). No material shall be applied when rain is imminent or when dust or sand is blowing.

609-3.2 OPERATION OF PITS AND QUARRIES. The aggregate material shall be obtained from approved sources. The Contractor shall make all necessary arrangements for obtaining the material, and all work involved in clearing and stripping pits or quarries and handling unsuitable material shall be performed by the Contractor at his/her own expense. The material in the pits shall be handled so that a uniform and satisfactory product shall be secured. Unless otherwise directed, pits shall be adequately drained and shall be left in a neat and presentable condition with all slopes dressed uniformly. Quarries shall be left as neat and presentable as practicable.

609-3.3 EQUIPMENT AND TOOLS. The Contractor shall furnish all equipment, tools, and machines necessary for the performance of the work.

a. Pressue Distributor. The distributor shall be designed, equipped, maintained, and operated so that bituminous material at even heat may be applied uniformly on variable widths of surface at the specified rate. The allowable variation from the specified rate shall not exceed 10 percent. Distributor equipment shall include a tachometer, pressue gages, volume-measuring devices or a calibrated tank, and a thermometer for measuring temperatures of tank contents. The distributor shall be self-powered and shall be equipped with a power unit for the pump and full circulation spray bars adjustable laterally and vertically.

b. Aggregate Spreader. The aggregate spreader shall be a self-propelled mechanical spreader or truck-attached mechanical spreader capable of uniformly distributing aggregate at the specified rates.

c. Roller. The roller shall be a pneumatic-tired roller with an effective rolling width of at least 60 inches (152 cm) and capable of exerting a minimum contact pressure of 40 pounds per square inch (280 000 newtons per square meter).

d. Power Broom. A power broom and/or blower shall be provided for removing loose material from the surface to be treated.

609-3.4 PREPARING UNDERLYING COURSE. The surface of the underlying course shall be prepared, shaped, and conditioned to a uniform grade and section, as shown on the plans and as specified. Loose dirt and other objectionable material shall be removed from the surface.

On those type of bases where a prime coat is required and specified, the prime shall be applied and satisfactorily cured before starting the bituminous surface treatment.

When specified, the Contractor shall be required to patch, with premixed material, any holes or other malformations deviating from the true cross section and grade. The premixed material shall be made of the bituminous material specified in the proposal or plans and prepared by the method as directed by the Engineer. All small patches shall be thoroughly hand tamped while the large patches shall be rolled with a power or pneumatic roller.

609-3.5 APPLICATION OF BITUMINOUS MATERIAL. Bituminous material shall be applied upon the properly prepared surface at the rate and temperature specified using a pressure distributor to obtain uniform distribution at all points. To insure proper drainage, the strips shall begin along the centerline of the pavement on a crowned section or on the high side of the pavement with a one-way slope. During all applications, the surfaces of adjacent structures shall be protected in such manner as to prevent their being spattered or marred. Bituminous materials shall not be discharged into borrow pits or gutters or upon the airport area.

609-3.6 APPLICATION OF AGGREGATE MATERIAL. Immediately after the application of the bituminous material or when directed, the aggregates at the rate specified for each designated application shall be spread uniformly over the bituminous material. Trucks spreading aggregate shall be operated backward so that the bituminous material will be covered before the truck wheels pass over it. The aggregate shall be spread in the same width of application as the bituminous material and shall not be applied in such thickness as to cause blanketing. Back-spotting or sprinkling of additional aggregate material, and pouring additional bituminous material over areas that show up having insufficient cover or bitumen, shall be done by hand whenever necessary. Additional spreading of aggregate material shall be done by means of a motor-patrol grader equipped with broom moldboard, a broom drag, or a power broom, as directed by the Engineer.

Immediately after spreading each application, the aggregate shall be rolled. The rolling shall be continued until no more aggregate material can be worked into the surface. In the construction of the second and third application, blading with the wire-broom moldboard attachment or broom dragging shall begin as soon as possible after the rolling has started and after the surface has set sufficiently to prevent excessive marking. Further blading and rolling on the strip being placed and on adjacent strips previously placed, shall be done as often as necessary to keep the aggregate material uniformly distributed. These operations shall be continued until the surface is evenly covered and cured to the satisfaction of the Engineer.

Succeeding applications shall not be applied until the preceding application has set and in no case until at least 24 hours have elapsed. If dust, dirt, or other foreign matter accumulates on the surface between the applications, the Contractor shall be required to sweep and clean the surface as specified herein. The bituminous material and the aggregate shall be spread upon the clean and properly cured surface and handled as required. Extreme care shall be taken in all applications to avoid brooming or tracking dirt or any foreign matter on any portion of the pavement surface under construction.

All surplus aggregate from the final application shall be swept off the surface and removed prior to final acceptance of the work.

609-3.7 CORRECTION OF DEFECTS. Any defects, such as raveling, low centers, lack of uniformity, or other imperfections caused by faulty workmanship, shall be corrected to the satisfaction of the Engineer.

All defective materials resulting from over-heating, improper handling, or application shall be removed by the Contractor and replaced with approved materials as provided for in these specifications.

609-3.8 BITUMINOUS MATERIAL CONTRACTOR'S RESPONSIBILITY. Samples of the bituminous materials that the Contractor proposes to use, together with a statement as to their source and character, shall be submitted and approval obtained before use of such materials begins.

The Contractor shall furnish vendor's certified test reports for each carload, or equivalent, of bitumen shipped to the project. The report shall be delivered to the Engineer before permission is granted for use of the material. The furnishing of the vendor's certified test report for the bituminous material shall not be interpreted as a basis for final acceptance. All such test reports shall be subject to verification by testing sample materials as received for use on the project.

609-3.9 FREIGHT AND WEIGH BILLS. Before the final estimate is allowed the Contractor shall file with the Engineer receipted bills where railroad shipments are made, and certified weight bills when materials are received in any other manner, of the bituminous and covering materials actually used in the construction covered by the contract. The Contractor shall not remove bituminous material from the tank car or storage tank until the initial outage and temperature measurements have been taken by the Engineer, nor shall the car or tank be released until the final outage has been taken by the Engineer.

Copies of all freight bills and weigh bills shall be furnished to the Engineer during the progress of the work.

METHOD OF MEASUREMENT

609-4.1 The bituminous material shall be measured by the **[gallon(liter)][ton (kg)]**. Volume shall be corrected to the volume at 60° F (15° C) in accordance with ASTM D 1250 for cutback asphalt and Table IV-3 of The Asphalt Institute's Manual MS-6 for emulsified asphalt. Water added to emulsified asphalt will not be measured for payment.

609-4.2 The quantity of aggregate materials for the first application to be paid for shall be the number of tons (kg) of aggregate used for the accepted work.

609-4.3 The quantity of aggregate material for the second application to be paid for shall be the number of tons (kg) of aggregate used for the accepted work.

609-4.4 The tonnage of aggregate for the third application to be paid for shall be the number of tons (kg) of aggregate used for the accepted work.

BASIS OF PAYMENT

609-5.1 Payment shall be made at the contract unit price per **[gallon][ton]** for bituminous material for surface treatment and per ton for the first, second and third aggregate application. These prices shall be full compensation for furnishing all materials and for all preparation, hauling and application of the materials, and for all labor, equipment, tools, and incidentals necessary to complete the item.

Payment will be made under:

Item P-609-5.1	Bituminous Material--per **[gallon (liter)][ton (kg)]**
Item P-609-5.2	First Application Aggregate--per ton (kg)
Item P-609-5.3	Second Application Aggregate--per ton (kg)
Item P-609-5.4	Third Application Aggregate--per ton (kg)

TESTING REQUIREMENTS

ASTM C 29	Unit Weight of Aggregate
ASTM C 88	Soundness of Aggregates by Use of Sodium Sulfate or Magnesium Sulfate
ASTM C 131	Resistance to Abrasion of Small Size Coarse Aggregate by Use of the Los Angeles Machine
ASTM C 136	Sieve or Screen Analysis of Fine and Coarse Aggregate

MATERIAL REQUIREMENTS

ASTM D 946	Penetration-Graded Asphalt-Cement for Use in Pavement Construction
ASTM D977	Emulsified Asphalt
ASTM D 1250	Petroleum Measurement Tables
ASTM D 3381	Viscosity-Graded Asphalt-Cement for Use in Pavement Construction
ASTM D 2397	Cationic Emulsified Asphalt

ITEM P-610 STRUCTURAL PORTLAND CEMENT CONCRETE

DESCRIPTION

610-1.1 This item shall consist of **[plain][reinforced]** structural portland cement concrete, prepared and constructed in accordance with these specifications, at the locations and of the form and dimensions shown on the plans.

MATERIALS

610-2.1 GENERAL. Only approved materials, conforming to the requirements of these specifications, shall be used in the work. They may be subjected to inspection and tests at any time during the progress of their preparation or use. The source of supply of each of the materials shall be approved by the Engineer before delivery or use is started. Representative preliminary samples of the materials shall be submitted by the Contractor, when required, for examination and test. Materials shall be scored and handled to insure the preservation of their quality and fitness for use and shall be located to facilitate prompt inspection. All equipment for handling and transporting materials and concrete must be clean before any material or concrete is placed therein.

In no case shall the use of pit-run or naturally mixed aggregates be permitted. Naturally mixed aggregate shall be screened and washed, and all fine and coarse aggregates shall be stored separately and kept clean. The mixing of different kinds of aggregates from different sources in one storage pile or alternating batches of different aggregates will not be permitted.

610-2.2 COARSE AGGREGATE. The coarse aggregate for concrete shall meet the requirements of ASTM C 33.

Coarse aggregate shall be well graded from coarse to fine and shall meet one of the gradations shown in Table 1, using ASTM C 136.

610-2.3 FINE AGGREGATE. The fine aggregate for concrete shall meet the requirements of ASTM C 33.

The fine aggregate shall be well graded from fine to coarse and shall meet the requirements of Table 2, when tested in accordance with ASTM C 136:

TABLE 1. GRADATION FOR COARSE AGGREGATE

Sieve Designation (square openings)	Percentage by Weight Passing Sieves						
	2"	1½"	1"	¾"	½"	⅜"	No.4
No. 4 to ¾ in.(4.75-19.0 mm)			100	90-100		20-55	0-10
No. 4 to 1 in.(4.75-25.0 mm)		100	90-100		25-60		0-10
No. 4 to 1½ in.(4.75-38.1 mm)	100	95-100		35-70		10-30	0-5

TABLE 2. GRADATION FOR FINE AGGREGATE

Sieve Designation (square openings)	Percentage by Weight Passing Sieves
⅜ inch (9.5 mm)	100
No. 4 (4.75 mm)	95–100
No. 16 (1.18 mm)	45–80
No. 30 (0.60 mm)	25–55
No. 50 (0.30 mm)	10–30
No. 100 (0.15 mm)	2–10

Blending will be permitted, if necessary, in order to meet the gradation requirements for fine aggregate. Fine aggregate deficient in the percentage of material passing the No. 50 mesh sieve may be accepted, provided that such deficiency does not exceed 5% and is remedied by the addition of pozzolanic or cementitious materials other than portland cement, as specified in 610–2.6 on admixtures, in sufficient quantity to produce the required workability as approved by the Engineer.

610–2.4 CEMENT. Cement shall conform to the requirements of [ ] Type [ ].

* *

The Engineer shall specify one of the following: ASTM C 150 – Type I, IA, II, IIA, III, IIIA; ASTM C 595 – Type IP, IP–A, IS, IS–A.

* *

The Contractor shall furnish vendors' certified test reports for each carload, or equivalent, of cement shipped to the project. The report shall be delivered to the Engineer before permission to use the cement is granted. All such test reports shall be subject to verification by testing sample materials received for use on the project.

610–2.5 WATER. The water used in concrete shall be free from sewage, oil, acid, strong alkalies, vegetable matter, and clay and loam. If the water is of questionable quality, it shall be tested in accordance with AASHO T 26.

610–2.6 ADMIXTURES. The use of any material added to the concrete mix shall be approved by the Engineer. Before approval of any material, the Contractor shall be required to submit the results of complete physical and chemical analyses made by an acceptable testing laboratory. Subsequent tests shall be made of samples taken by the Engineer from the supply of the material being furnished or proposed for use on the work to determine whether the admixture is uniform in quality with that approved.

Pozzolanic admixtures shall be fly ash or raw or calcined natural pozzolons meeting the requirements of ASTM C 618.

Air–entraining admixtures shall meet the requirements of ASTM C 260. Air–entraining admixtures shall be added at the mixer in the amount necessary to produce the specified air content.

Water–reducing, set–controlling admixtures shall meet the requirements of ASTM C 494, Type A, water–reducing or Type D, water–reducing and retarding. Water–reducing admixtures shall be added at the mixer separately from air–entraining admixtures in accordance with the manufacturer's printed instructions.

610–2.7 PREMOLDED JOINT MATERIAL. Premolded joint material for expansion joints shall meet the requirements of ASTM [ ]

* *

The Engineer shall designate either ASTM D 1751 or ASTM D 1752.

* *

610-2.8 JOINT FILLER. The filler for joints shall meet the requirements of Item P-605, unless otherwise specified in the proposal.

610-2.9 STEEL REINFORCEMENT. Reinforcing shall consist of [ ] conforming to the requirements of [ ].

* *

The Engineer shall designate one of the following:

Welded Steel Wire Fabric	**ASTM A 185**
Welded Deformed Steel Fabric	**ASTM A 497**
Bar Mars	**ASTM A 184 or A 704**

Delete this section when not applicable to the project.

* *

610-2.10 COVER MATERIALS FOR CURING. Curing materials shall conform to one of the following specifications:

Waterproof Paper for Curing Concrete	ASTM C 171
Polyethylene Sheeting for Curing Concrete	ASTM C 171
Liquid Membrane-Forming Compounds for Curing Concrete	ASTM C 309, Type 2

CONSTRUCTION METHODS

610-3.1 GENERAL. The Contractor shall furnish all labor, materials, and services necessary for, and incidental to, the completion of all work as shown on the drawings and specified herein. All machinery and equipment owned or controlled by the Contractor, which he proposes to use on the work, shall be of sufficient size to meet the requirements of the work, and shall be such as to produce satisfactory work; all work shall be subject to the inspection and approval of the Engineer.

610-3.2 CONCRETE COMPOSITION. The concrete shall develop a compressive strength of [ ] psi in 28 days as determined by test cylinders made in accordance with ASTM C 31 and tested in accordance with ASTM C 39. The concrete shall contain not less than 470 pounds of cement per cubic yard (280 kg per cubic meter). The concrete shall contain 5 percent of entrained air, plus or minus 1 percent, as determined by ASTM C 231 and shall have a slump of not more than 4 inches (10 cm) as determined by ASTM C 143.

* *

The Engineer shall designate the compressive strength. The minimum allowable strength is 3000 psi (20670 kg).

* *

610-3.3 ACCEPTANCE SAMPLING AND TESTING. Concrete for each structure will be accepted on the basis of the compressive strength specified in paragraph 3.2. The concrete shall be sampled in accordance with ASTM C 172. Compressive strength specimens shall be made in accordance with ASTM C 31 and tested in accordance with ASTM C 39.

Concrete cylindrical test specimens shall be made in accordance with ASTM C 31 and tested in accordance with ASTM C 39. The Contractor shall cure and store the test specimens under such conditions as directed. The Engineer will make the actual tests on the specimens at no expense to the Contractor.

610-3.4 PROPORTIONING AND MEASURING DEVICES. When package cement is used, the quantity for each batch shall be equal to one or more whole sacks of cement. The aggregates shall be measured separately by weight. If aggregates are delivered to the mixer in batch trucks, the exact amount for each mixer charge shall be contained in each batch compartment. Weighing boxes or hoppers shall be approved by the Engineer and shall provide means of regulating the flow of aggregates into the batch box so that the required and exact weight of aggregates can be readily obtained.

610-3.5 CONSISTENCY. The consistency of the concrete shall be checked by the slump test specified in ASTM C 143.

610-3.6 MIXING. Concrete may be mixed at the construction site, at a central point, or wholly or in part in truck mixers. The concrete shall be mixed and delivered in accordance with the requirements of ASTM C 94.

610-3.7 MIXING CONDITIONS. The concrete shall be mixed only in quantities required for immediate use. Concrete shall not be mixed while the air temperature is below 40° F (4° C) without permission of the Engineer. If permission is granted for mixing under such conditions, aggregates or water, or both, shall be heated and the concrete shall be placed at a temperature not less than 50° (10° C) nor more than 100° F (38° C). The Contractor shall be held responsible for any defective work, resulting from freezing or injury in any manner during placing and curing, and shall replace such work at his/her expense.

Retempering of concrete by adding water or any other material shall not be permitted.

The delivery of concrete to the job shall be in such a manner that batches of concrete will be deposited at uninterrupted intervals.

610-3.8 FORMS. Concrete shall not be placed until all the forms and reinforcements have been inspected and approved by the Engineer. Forms shall be of suitable material and shall be of the type, size, shape, quality, and strength to build the structure as designed on the plans. The forms shall be true to line and grade and shall be mortar-tight and sufficiently rigid to prevent displacement and sagging between supports. The Contractor shall bear responsibility for their adequacy. The surfaces of forms shall be smooth and free from irregularities, dents, sags, and holes.

The internal ties shall be arranged so that, when the forms are removed, no metal will show in the concrete surface or discolor the surface when exposed to weathering. All forms shall be wetted with water or with a nonstaining mineral oil which shall be applied shortly before the concrete is placed. Forms shall be constructed so that they can be removed without injuring the concrete or concrete surface. The forms shall not be removed before the expiration of at least 30 hours from vertical faces, walls, slender columns, and similar structures; forms supported by falsework under slabs, beams, girders, arches, and similar construction shall not be removed until tests indicate that at least 60% of the design strength of the concrete has developed.

610-3.9 PLACING REINFORCEMENT. All reinforcement shall be accurately placed, as shown on the plans, and shall be firmly held in position during concreting. Bars shall be fastened together at intersections. The reinforcement shall be supported by approved metal chairs. Shop drawings, lists, and bending details shall be supplied by the Contractor when required.

610-3.10 EMBEDDED ITEMS. Before placing concrete, any items that are to be embedded shall be firmly and securely fastened in place as indicated. All such items shall be clean and free from coating, rust, scale, oil, or any foreign matter. The embedding of wood shall be avoided. The concrete shall be spaded and consolidated around and against embedded items.

610-3.11 PLACING CONCRETE. All concrete shall be placed during daylight, unless otherwise approved. The concrete shall not be placed until the depth and character of foundation, the adequacy of forms and falsework, and the placing of the steel reinforcing have been approved. Concrete shall be placed as soon as practical after mixing and in no case later than 1 hour after water has been added to the mix. The method and manner of placing shall be such to avoid segregation and displacement of the reinforcement. Troughs, pipes, and chutes shall be used as an aid in placing concrete when necessary. Dropping the concrete a distance of more than 5 feet (1.5 m), or depositing a large quantity at one point, will not be permitted. Concrete shall be placed upon clean, damp surfaces, free from running water, or upon properly consolidated soil.

The concrete shall be compacted with suitable mechanical vibrators operating within the concrete. When necessary, vibrating shall be supplemented by hand spading with suitable tools to assure proper and adequate compaction. Vibrators shall be manipulated so as to work the concrete thoroughly around the reinforcement and embedded fixtures and into corners and angles of the forms. The vibration at any joint shall be of sufficient duration to accomplish compaction but shall not be prolonged to the point where segregation occurs. Concrete deposited under water shall be carefully placed in a compact mass in its final position by means of a tremie, a closed bottom dump bucket, or other approved method and shall not be disturbed after being deposited.

610-3.12 CONSTRUCTION JOINTS. When the placing of concrete is suspended, necessary provisions shall be made for joining future work before the placed concrete takes its initial set. For the proper bonding of old and new concrete, such provisions shall be made for grooves, steps, keys, dovetails, reinforcing bars or other devices as may be prescribed. The work shall be arranged so that a section begun on any day shall be finished during daylight of the same day. Before depositing new concrete on or against concrete which has hardened, the surface of the hardened concrete shall be cleaned by a heavy steel broom, roughened slightly, wetted, and covered with a neat coating of cement paste or grout.

610-3.13 EXPANSION JOINTS. Expansion joints shall be constructed at such points and of such dimensions as may be indicated on the drawings. The premolded filler shall be cut to the same shape as that of the surfaces being joined. The filler shall be fixed firmly against the surface of the concrete already in place in such manner that it will not be displaced when concrete is deposited against it.

610-3.14 DEFECTIVE WORK. Any defective work disclosed after the forms have been removed shall be immediately removed and replaced. If any dimensions are deficient, or if the surface of the concrete is bulged, uneven, or shows honeycomb, which in the opinion of the Engineer cannot be repaired satisfactorily, the entire section shall be removed and replaced at the expense of the Contractor.

610-3.15 SURFACE FINISH. All exposed concrete surfaces shall be true, smooth, free from open or rough spaces, depressions, or projections. The concrete in horizontal plane surfaces shall be brought flush with the finished top surface at the proper elevation and shall be struck-off with a straightedge and floated. Mortar finishing shall not be permitted, nor shall dry cement or sand-cement mortar be spread over the concrete during the finishing of horizontal plane surfaces.

When directed, the surface finish of exposed concrete shall be a rubbed finish. If forms can be removed while the concrete is still green, the surface shall be pointed and wetted and then rubbed with a wooden float until all irregularities are removed. If the concrete has hardened before being rubbed, a carborundum stone shall be used to finish the surface. When approved, the finishing can be done with a rubbing machine.

610-3.16 CURING AND PROTECTION. All concrete shall be properly cured and protected by the Contractor. The work shall be protected from the elements, flowing water, and from defacement of any nature during the building operations. The concrete shall be cured as soon as it has sufficiently hardened by covering with an approved material. Water-absorptive coverings shall be thoroughly saturated when placed and kept saturated for a period of at least 3 days. All curing mats or blankets shall be sufficiently weighted or tied down to keep the concrete surface covered and to prevent the surface from being exposed to currents of air. Where wooden forms are used, they shall be kept wet at all times until removed to prevent the opening of joints and drying out of the concrete. Traffic shall not be allowed on concrete surfaces for 7 days after the concrete has been placed.

610-3.17 DRAINS OR DUCTS. Drainage pipes, conduits, and ducts that are to be encased in concrete shall be installed by the Contractor before the concrete is placed. The pipe shall be held rigidly so that it will not be displaced or moved during the placing of the concrete.

610-3.18 COLD WEATHER PROTECTION. When concrete is placed at temperatures below 40° F (4° C), the Contractor shall provide satisfactory methods and means to protect the mix from injury by freezing. The aggregates, or water, or both, shall be heated in order to place the concrete at temperatures between 50° and 100° F (10° and 38° C).

Calcium chloride may be incorporated in the mixing water when directed by the Engineer. Not more than 2 pounds (908 grams) of Type 1 nor more than 1.6 pounds (726 grams) of Type 2 shall be added per bag of cement. After the concrete has been placed, the Contractor shall provide sufficient protection such as cover,

canvas, framework, heating apparatus, etc., to enclose and protect the structure and maintain the temperature of the mix at not less than 50° F (10° C) until at least 60% of the designed strength has been attained.

610-3.19 FILLING JOINTS. All joints which require filling shall be thoroughly cleaned, and any excess mortar or concrete shall be cut out with proper tools. Joint filling shall not be started until after final curing and shall be done only when the concrete is completely dry. The cleaning and filling shall be carefully done with proper equipment and in a manner to obtain a neat looking joint free from excess filler.

METHOD OF MEASUREMENT

610-4.1 Portland cement concrete shall be measured by the number of cubic yards (cubic meters) of concrete complete in place and accepted. In computing the yardage of concrete for payment, the dimensions used shall be those shown on the plans or ordered by the Engineer. No measurements or other allowances shall be made for forms, falsework, cofferdams, pumping, bracing, expansion joints, or finishing of the concrete. No deductions in yardage shall be made for the volumes of reinforcing steel or embedded items.

610-4.2 Reinforcing steel shall be measured by the calculated theoretical number of pounds (kg) placed, as shown on the plans, complete in place and accepted. The unit weight used for deformed bars shall be the weight of plain square or round bars of equal nominal size. If so indicated on the plans, the poundage to be paid for shall include the weight of metal pipes and drains, metal conduits and ducts, or similar materials indicated and included.

BASIS OF PAYMENT

610-5.1 Payment shall be made at the contract unit price per cubic yard (cubic meter) for structural portland cement concrete and per pound (kg) for reinforcing steel. These prices shall be full compensation for furnishing all materials and for all preparation, delivering and installation of these materials, and for all labor, equipment, tools, and incidentals necessary to complete the item.

Payment will be made under:

Item P-610-5.1	Structural Portland Cement Concrete--per cubic yard (cubic meter)
Item P-610-5.1	Steel Reinforcement—per pound (kg)

TESTING REQUIREMENTS

ASTM C 31	Making and Curing Test Specimens in the Field
ASTM C 39	Compressive Strength of Cylindrical Concrete Specimens
ASTM C 136	Sieve or Screen Analysis of Fine and Coarse Aggregate
ASTM C 138	Unit Weight, Yield, and Air Content of Concrete
ASTM C 143	Slump of Portland Cement Concrete
ASTM C 231	Air Content of Freshly Mixed Concrete by the Pressure Method

MATERIAL REQUIREMENTS

ASTM A 184	Specification for Fabricated Deformed Steel Bar Mats for Concrete Reinforcement
ASTM A 185	Welded Steel Wire Fabric for Concrete Reinforcement

ASTM A 497	Specification for Welded Deformed Steel Wire Fabric for Concrete Pavement
ASTM A 615	Deformed and Plain Billet-Steel Bars for Concrete Reinforcement
ASTM C 33	Concrete Aggregates
ASTM C 94	Ready-Mixed Concrete
ASTM C 150	Portland Cement
ASTM C 171	Sheet Materials for Curing Concrete
ASTM C 260	Air-Entraining Admixtures for Concrete
ASTM C 309	Liquid Membrane-Forming Compounds for Curing Concrete
ASTM C 595	Blend Hydraulic Cements
ASTM C 618	Fly Ash and Raw or Calcined Natural Pozzolan for Use as a Mineral Admixture in Portland Cement Concrete
ASTM D 1751	Specification for Preformed Expansion Joint Fillers for Concrete Paving and Structrual Construction
ASTM D 1752	Specification for Preformed Sponge Rubber and Cork Expansion Joint Fillers for Concrete Paving and Structurual Construction

ITEM P-620 RUNWAY AND TAXIWAY PAINTING

DESCRIPTION

620-1.1 This item shall consist of the painting of numbers, markings, and stripes on the surface of runways and taxiways applied in accordance with these specifications and at the locations shown on the plans, or as directed by the engineer.

MATERIALS

620-2.1 PAINT. Paint shall meet the requirements of Fed. Spec.[ ] **[and TT-P-110].**

* *

The engineer shall designate either TT-P-1952 or TT-P85. TT-P-1952 is a water emulsion base; TT-P-85 is an oil base paint. TT-P-110 is a black oil base paint and can be used to outline a border at least 6 inches (150 mm) wide around markings on concrete pavements.

* *

620-2.2 **[REFLECTIVE MEDIA. Glass spheres shall meet the requirements of Fed. Spec. TT-B-1325, Type III, gradation A.]**

* *

The addition of glass spheres to a painted area may cause a reduction in the friction characteristics of a wet pavement surface. Use of glass spheres is at the option of the Engineer and/or sponsor.

* *

CONSTRUCTION METHODS

620-3.1 WEATHER LIMITATIONS. The painting shall be performed only when the surface is dry, when the atmospheric temperature is above 45° F (7° C), and when the weather is not foggy or windy.

620-3.2 EQUIPMENT. All equipment for the work shall be approved by the engineer and shall include the apparatus necessary to properly clean the existing surface, a mechanical marking machine, and such auxiliary hand-painting equipment as may be necessary to satisfactorily complete the job.

The mechanical marker shall be an atomizing spray-type marking machine suitable for application of traffic paint. It shall produce an even and uniform film thickness at the required coverage and shall be designed so as to apply markings of uniform cross sections and clear-cut edges without running or spattering.

620-3.3 PREPARATION OF SURFACE. Immediately before application of the paint, the surface shall be dry and free from dirt, grease, oil, laitance, or other foreign material which would reduce the bond between the paint and the pavement. The area to be painted shall be cleaned by sweeping and blowing or by other methods as required to remove all dirt, laitance, and loose materials.

[Paint shall not be applied to portland cement concrete pavement until the concrete in the areas to be painted is clean of curing material. Sandblasting or high pressure water shall be used to remove curing material from concrete surfaces.]

620-3.4 LAYOUT OF MARKINGS. On those sections of pavement where no previously applied markings are available to serve as a guide, the proposed markings shall be laid out in advance of the paint application.

620-3.5 APPLICATION. Markings shall be applied at the locations and to the dimensions and spacing shown on the plans. Paint shall not be applied until the layout and condition of the surface have been approved by the engineer.

The paint shall be mixed in accordance with the manufacturer's instructions and applied to the pavement with a marking machine at the rate of 100 to 110 square feet (9 to 10 square meters) per gallon (liter). The addition of thinner will not be permitted. A period of [ ] shall elapse between placement of a bituminous surface course or seal coat and application of the paint.

* *

The engineer shall specify the time period. TT-P-1952 may be applied 24 hours after placement of the pavement. In order to allow adequate curing of the pavement surface and to prevent peeling and blistering of the paint, a 30-day period is recommended for TT-P-85. Lesser periods may be specified if necessary to open the pavement to traffic. In this instance the engineer may wish to specify temporary markings at 50 percent of the specified coverage and to repaint the markings after the asphalt has cured.

* *

The edges of the markings shall not vary from a straight line more than 1/2 inch (12 mm) in 50 feet (15 m), and the dimensions shall be within a tolerance of plus or minus 5 percent. **[Glass spheres shall be distributed to the surface of the marked areas immediately after application of the paint. A dispenser shall be furnished which is properly designed for attachment to the marking machine and suitable for dispensing glass spheres. The spheres shall be applied at the rate of 10 pounds per gallon (1.2 kg per liter) of paint.]**

The contractor shall furnish certified test reports for the materials shipped to the project. The reports shall not be interpreted as a basis for final acceptance. The contractor shall notify the engineer upon arrival of a shipment of paint to the job site. All emptied containers shall be returned to the paint storage area for checking by the engineer. The containers shall not be removed from the airport or destroyed until authorized by the engineer.

620-3.6 PROTECTION. After application of the paint, all markings shall be protected from damage until the paint is dry. All surfaces shall be protected from disfiguration by spatter, splashes, spillage, or drippings of paint.

METHOD OF MEASUREMENT

620-4.1 The quantity of runway and taxiway markings to be paid for shall be **[the number of square feet (square meters) of painting]** **[one complete item in place]** performed in accordance with the specifications and accepted by the engineer.

BASIS OF PAYMENT

Payment shall be made at the contract unit price per square foot (square meter) **[contract lump sum]** for runway and taxiway painting. This price shall be full compensation for furnishing all materials and for all labor, equipment, tools, and incidentals necessary to complete the item.

Payment will be made under:

Item P-620-5.1	Runway and Taxiway Painting--**[per square foot (square meter)]** **[lump sum]**

MATERIAL REQUIREMENTS

Fed.Spec. TT-P-85	Paint, Traffic, and Airfield Marking, Solvent Base
Fed.Spec. TT-P-1952	Paint, Traffic and Airfield Marking, Water Emulsion Base
Fed.Spec. TT-P-110	Paint, Traffic Black (Nonreflectorized)
Fed.Spec. TT-B-1325	Beads (Glass Spheres) Retroreflective

ITEM P-625 COAL-TAR PITCH EMULSION SEALCOAT

DESCRIPTION

625-1.1 This item shall consist of an application of a [**rubberized**] coal-tar emulsion sealcoat, with or without mineral aggregate, [**and with the use of a latex rubber, which may or may not contain a silicone additive**] applied on an existing, previously prepared bituminous surface, in accordance with these specifications for the area shown on the plans or as designated by the Engineer.

* *

Use of a rubberized sealcoat may be specified by the Engineer by incorporating the words enclosed in brackets.

Silicones increase the viscosity of the mixture and provide for a more even distribution of the materials.

* *

MATERIALS

625-2.1 AGGREGATE. The aggregate shall either be a natural or manufactured product and shall be composed of clean, hard, durable, uncoated particles, free from lumps of clay and all organic matter. the aggregate shall meet the gradation in Table 1, when tested in accordance with ASTM C 136.

TABLE 1. GRADATION OF AGGREGATES

Sieve Size	Percentage by Weight Passing Sieves
No. 16 (1.18 mm)	100
No. 20 (0.85 mm)	85-100
No. 30 (0.60 mm)	15-85
No. 40 (0.40 mm)	2-15
No. 100 (0.15 mm)	0-2

625-2.2 BITUMINOUS MATERIALS. The bituminous material shall be a coal-tar pitch emulsion prepared from a high-temperature, coal-tar conforming to the requirements of ASTM D 490, Grade 12. Oil and water gas tar shall not be used even though they comply with ASTM D 490. The coal-tar pitch emulsion shall conform to all requirements of Fed. Spec. R-P-355 except the water content shall not exceed 50 percent.

625-2.3 WATER. The water used in mixing shall be potable and free from harmful soluble salts. The temperature of the water shall be at least 50° F (10° C).

625-2.4 LATEX RUBBER. The rubber shall be a copolymer latex containing 51-70 parts butadiene and 30-49 parts acrylonitrile or styrene[.] [**with silicones at 3 percent of the rubber content.**] The average particle size shall be between 300 and 1500 angstroms and the rubber shall be compatible with the coal-tar pitch emulsion used by the Contractor. The rubber must mix homogeneously with the coal-tar emulsion, water, and sand in the proportions specified to produce a mixture that will adequately suspend the sand.

* *

The Engineer shall delete paragraph 2.4 if a rubberized coal-tar pitch emulsion is not specified.

* *

COMPOSITION AND APPLICATION

625-3.1 COMPOSITION. The [rubberized] coal-tar pitch emulsion sealcoat shall consist of a mixture of coal-tar pitch emulsion, water, [latex rubber] and aggregate in the proportions shown in Table 2. **[The amount of water added to the rubberized coal-tar pitch emulsion or to the rubberized coal-tar pitch emulsion sand slurry, to achieve application consistency, shall not exceed 100 percent of the coal-tar pitch emulsion.] [The amount of water added to the coal-tar pitch emulsion sand slurry or to the emulsion shall not exceed 10 percent of the coal-tar pitch emulsion.]** The final composition shall be determined by the Engineer within the limitations of Table 2.

* *

The Engineer shall incorporate the appropriate sentence in the project specifications, depending on whether the sealcoat is to be rubberized or non-rubberized.

The composition of the sealcoat applicable to a project (rubberized or non-rubberized) shall be specified by the Engineer from the information contained in this note. The composition and application rates shall be inserted into Table 2. Insert points are denoted by asterisks.

The proportions of water, sand and rubber and the application rate are a function of the condition of the pavement surface texture desired. A highly oxidized pavement or a pavement with substantial cracks will require more sand and rubber as well as a heavier application rate than a newly placed pavement.

	Composition and Quantities			
Type of Sealcoat	**Water gal./gal. of emul.**	**Sand lbs./gal. of emul.**	**Rubber gal./gal. of emul.**	**Application Rate gal./sq. yd. (per application)**
Rubberized Sand Slurry	**0.70–1.00**	**6–14**	**0.07–0.12**	**0.25–0.55**
Rubberized Emulsion	**0.70–1.00**	**-**	**0.03–0.05**	**0.10–0.25**
Sand Slurry	**0.10 (max)**	**5–7**	**-**	**0.15–0.25**
Emulsion	**0.10 (max)**	**-**	**-**	**0.10–0.15**

* *

TABLE 2. COMPOSITION OF MIXTURE

Type of Sealcoat	Composition and Quantities			
	Water gal./gal. of emul.	Sand lbs/gal. of emul.	Rubber gal./gal. of emul.	Application Rate gal./sq. yd.(per application)
*	*	*	*	*

625-3.2 APPLICATION. **[The rubberized coal-tar emulsion sealcoat shall be applied in three coats at the rate specified in Table 2. The first and second coats shall consist of a rubberized sand slurry; the third coat shall consist of a rubberized emulsion.] [The sand slurry coal-tar emulsion sealcoat shall consist of two coats applied at the rate specified in Table 2.] [The emulsion sealcoat shall consist of two coats of emulsion applied at the rate specified in Table 2.]**

* *

The Engineer shall incorporate the appropriate sentence in the project specifications, depending on whether the sealcoat is rubberized, non-rubberized or emulsion only. When, in the opinion of the Engineer, an area will be subjected to heavy fuel spillage, a final application of straight emulsion, on a sand slurry sealcoat, may be made at the rate of 0.075 to 0.10 gallons per square yard (0.36 to 0.5 liters per square meter).

* *

625-3.3 TEST SECTION. Prior to full production, the Contractor shall prepare a quantity of mixture in the proportions shown in Table 2. The amount of mixture shall be sufficient to place a test section of approximately 50 square yards (45 square meters) at the application rate shown in Table 2. The area to be tested will be designated by the Engineer and will be located on the existing pavement.

The test section shall be used to verify the adequacy of the mixture and to determine the exact application rate. The same equipment and method of operations shall be used on the test section as will be used on the remainder of the work.

If the test section should prove to be unsatisfactory, the necessary adjustments to the mix composition, application rate, placement operations, and equipment shall be made. additional test sections shall be placed and evaluated, if required.

* *

The test section affords the Contractor and the Engineer an opportunity to determine the quality of the mixture in place as well as the performance of the equipment.

* *

CONSTRUCTION METHODS

625-4.1 WEATHER LIMITATIONS. The sealcoat shall not be applied when the surface is wet or when the humidity or impending weather conditions will not allow proper curing nor when the atmospheric or pavement temperature is below 50° F (10° C), unless otherwise directed by the Engineer.

625-4.2 EQUIPMENT AND TOOLS. All methods employed in performing the work and all equipment, tools, and machinery used for handling materials and executing any part of the work shall be subject to the approval of the Engineer before the work is started.

a. Distributors. Distributors used for the application of the tar emulsion shall be self-propelled, equipped with pneumatic tires, and capable of uniformly applying 0.15 to 0.50 gallon per square yard (0.69 to 2.3 liter per square meter) of tar emulsion over the required width of application. Distributors shall be equipped with removable manhole covers, tachometers, pressure gauges, and volume-measuring devices.

b. Mixing Equipment. The mixing machine shall have a continuous flow mixing unit capable of accurately delivering a predetermined proportion of aggregate, water, emulsion **[and rubber]** and of discharging the thoroughly mixed product on a continuous basis. The mixing unit shall be capable of thoroughly blending all ingredients together.

c. Spreading Equipment. Attached to the mixing machine shall be a mechanical-type squeegee distributor, equipped with flexible material in contact with the surface to prevent loss of slurry from the distributor. It shall be maintained to prevent loss of slurry on varying grades and adjusted to assure uniform spread.

There shall be a lateral control device and a flexible strike off capable of being adjusted to lay the slurry at the specified rate of application. The spreader box shall have an adjustable width. The box shall be kept clean; asphalt and aggregate build-up on the box shall not be permitted.

625-4.3 PREPARATION OF PAVEMENT SURFACE. Bituminous pavement surfaces which have been softened by petroleum derivatives or have failed due to any other cause shall be removed to the full depth of the damage and replaced with new bituminous concrete similar to that of the existing pavement. Areas of

the pavement surface to be treated shall be in a firm consolidated condition. They shall be sufficiently cured so that there is no concentration of oils on the surface. This can usually be determined by pouring water on the surface to be treated. If the water, after standing for a short period, picks up a film of oil, then that surface is not sufficiently cures for the application of the sealcoat.

A period of [ ] days shall elapse between the placement of a bituminous surface course and the application of the sealcoat.

* *

The Engineer shall specify the time period. In order to allow adequate curing of the pavement surface prior to applying the sealcoat, a 30 day period is recommended.

* *

625-4.4 CLEANING EXISTING SURFACE. Prior to placing the sealcoat, the surface of the pavement shall be clean and free from dust, dirt, or other loose foreign matter, grease, oil, or any type of objectionable surface film. When directed by the Engineer, the existing surface shall be cleaned with a power blower and wire brushes.

Where vegetation exists in cracks, the vegetation shall be removed and the cracks cleaned to depth of 2 inches (50 mm) where practical. Those cracks shall be treated with a concentrated solution of a herbicide approved by the Engineer. Cracks wider than 3/4 inch (18 mm) shall be filled with compatible crack filler, prior to placing the sealcoat. Areas that have been subjected to fuel or oil spillage shall be wire brushed to remove any dirt accumulations. The area shall then be primed with shellac or a synthetic resin to prevent the sealcoat from debonding.

* *

If a rubberized sealcoat is included in the specifications, all cracks may be filled with the slurry at the time it is applied to the pavement. However, application must be made with a squeegee as specified in paragraph 625-4.2c.

* *

625-4.5 APPLICATION OF EMULSION. The emulsion shall be applied at a uniform rate with a distributor at the rate specified in Table 2. When it is necessary to dilute the emulsion in order to aid application, the emulsion may be diluted with clean water but not more than 10 percent.

625-4.6 APPLICATION OF SLURRY. When the emulsion, aggregate, water [**and rubber**] are blended, the material shall be premixed to produce a homogeneous mixture of uniform consistency. The quantities of materials to be combined in each batch shall be in accordance with the proportions shown in Table 2.

Before application, the materials shall be proportioned accurately and mixed by suitable mixing equipment. The emulsion and the water shall first be charged into the mixer and blended to a desired consistency. Aggregate shall then be added at a slow and uniform rate while the mixing is continued. [**The latex rubber shall then be added.**] After all the constituents are in the mixer, the mixing shall continue for approximately five minutes or longer, if necessary. The mixing shall produce a smooth, free flowing homogeneous mixture of uniform consistency. Slow mixing shall be continuous from the time the bitumen is placed into the mixer until the slurry is applied by distributor truck or poured into the spreading equipment. During the entire mixing process, no breaking, segregating, or hardening of the emulsion nor balling, lumping, or swelling of the aggregate shall be permitted. The slurry shall be applied at a uniform rate to provide the desired amount. A sufficient amount of slurry shall be fed in the spreader box to keep a full supply against the full width of the squeegee, so that complete coverage of all surface voids and cracks is obtained.

In areas where a spreader box cannot be used, the slurry shall be applied by means of a hand squeegee.

Upon completion of the work, the sealcoat shall have no pin holes, bare spots, or cracks through which liquids or foreign matter could penetrate to the underlying pavement. The finished surface shall present a uniform texture.

Each application shall be allowed to dry thoroughly before the next coat is applied.

625-4.7 CURING. The mixture shall be permitted to dry for a minimum of [ ] hours after the final application before opening to traffic and shall be sufficiently cured to drive over without damage to the sealcoat. Any damage to the uncured mixture will be the responsibility of the Contractor to repair.

* *

A minimum of 24 hours is recommended.

* *

625-4.8 HANDLING. The mixture shall be continuously agitated from the time it had been mixed until its application on the pavement surface. The distributor or applicator, pumps, and all tools shall be maintained in satisfactory working condition. Spray bar nozzles, pumps, or other equipment can be cleaned with coal-tar toluene or xylene.

625-4.9 CONTRACTOR'S CERTIFICATION. The Contractor shall furnish the manufacturers certification that each consignment of emulsion shipped to the project meets the requirements of Fed. Spec. R-P-355, except the water content shall not exceed 50 percent. **[The Contractor shall furnish certification to the Engineer that the latex rubber shipped to the project meets the requirements of the material specified in paragraph 625-2.4.]** The **[certification]** **[certifications]** shall be delivered to the Engineer prior to the beginning of work. The manufacturer's certification for the emulsion **[and rubber]** shall not be interpreted as a basis for final acceptance. Any certification received shall be subject to verification by testing samples received for project use.

METHOD OF MEASUREMENT

625-5.1 The coal-tar pitch emulsion shall be measured by the gallon (liter) of undiluted emulsion.

625-5.2 The mineral aggregate shall be measured by the ton (kilogram).

625-5.3 The latex rubber shall be measured by the gallon (liter).

* *

Paragraph 5.3 shall be deleted if a rubberized sealcoat is not specified.

* *

BASIS OF PAYMENT

625-6.1 Payment shall be made at the contract unit price per gallon (liter) for the coal-tar pitch emulsion, per ton (kilogram) for the mineral aggregate[,][.] [and per gallon (liter) for the latex rubber.] These prices shall fully compensate the Contractor for furnishing all materials; and for all labor, equipment, tools, and incidentals necessary to complete the items.

Payment will be made under:

Item P-625-5.1	Coal-Tar Pitch Emulsion--per gallon (liter)
Item P-625-5.2	Aggregate--per ton (kilogram)
Item P-625-5.3	Latex Rubber-per gallon (liter)

* *

Item P-625-5.3 shall be deleted of a rubberized sealcoat is not specified.

* *

TESTING REQUIREMENTS

ASTM C 136	Sieve or Screen Analysis of Fine and Coarse Aggregates

MATERIAL REQUIREMENTS

Fed.Spec. R-P-355	Pitch, Coal-Tar Emulsion (Coating for Bituminous Pavements)
ASTM D 490	Tars (For Use in Road Construction)

ITEM P-626 EMULSIFIED ASPHALT SLURRY SEAL SURFACE TREATMENT

DESCRIPTION

626-1.1 This item shall consist of a mixture of emulsified asphalt, mineral aggregate, and water; properly proportioned, mixed, and spread evenly on a prepared underlying course or existing wearing course in accordance with these specifications and shall conform to the dimensions shown on the plans or as directed by the Engineer.

MATERIALS

626-2.1 AGGREGATE. The aggregate shall consist of sound and durable natural or manufactured sand, slag, crusher fines, crushed stone, or crushed stone and rock dust, or a combination thereof. smooth-textured sand of less than 1.25 percent water absorption, as tested by ASTM C128, shall not exceed 50 percent of the total combined aggregate. The aggregate shall be clean and free from vegetable matter, dirt, dust, and other deleterious substances. The aggregate blend shall have a sand equivalent of not less than 45 when tested in accordance with ASTM D2419. The aggregate shall show a loss of not more than [ ] percent when tested in accordance with ASTM C 131. The sodium sulfate soundness loss shall not exceed [ ] percent, or the magnesium soundness loss shall not exceed [ ] percent after 5 cycles when tested in accordance with ASTM C88. Aggregate retained on the No. 50 sieve (300 micro m) shall be 100 percent crushed.

* *

The percent loss when tested under ASTM C131 should not exceed 35. The sodium sulfate loss should not exceed 9 percent; the magnesium sulfate loss should not exceed 12 percent. In certain specific cases, where aggregates complying with those maximums cannot be economically obtained, aggregates with a higher percentage loss or wear may be specified, provided a satisfactory service record under similar conditions of service and exposure has been demonstrated.

* *

The combined aggregate shall conform to the gradation shown in Table 1 when tested in accordance with ASTM C 136.

TABLE 1. GRADATION OF AGGREGATES

Sieve Size	Percentage by Weight Passing Sieves
3/8 in. (9.5 mm)	*
No. 4 (4.75 mm)	*
No. 8 (2.36 mm)	*
No. 16 (1.18 mm)	*
No. 30 (600 micro m)	*
No. 50 (300 micro m)	*
No. 100 (150 micro m)	*
No. 200 (75 micro m)	*
Residual asphalt content Percent dry aggregate	*
Pounds of aggregate per square yard	*
Kilograms of aggregate per square meter	*

The aggregate, as finally selected, shall have a gradation within the limits designated in Table 1, and should not vary from the low limit on one sieve to the high-limit on the adjacent sieve and vice versa.

* *

The aggregate gradation band applicable to a project shall be specified by the Engineer from the gradations shown in this note. The appropriate gradation shall be inserted in Table 1. Insert points are denoted by asterisks.

The Type I gradation is used for maximum crack penetration and is usually used in low density traffic areas where the primary objective is sealing.

The Type II gradation is used to seal and improve skid resistance.

The Type III gradation is used to correct surface conditions and provide skid resistance.

GRADATION OF AGGREGATES

Sieve Size	Percentage by Weight Passing Sieves		
	Type I	Type II	Type III
3/8 in. (9.5 mm)	---	100	100
No. 4 (4.75 mm)	100	98–100	70–90
No. 8 (2.36 mm)	90–100	75–90	45–70
No. 16 (1.18 mm)	65–90	50–75	28–50
No. 30 (600 micro m)	40–60	30–50	19–34
No. 50 (300 micro m)	25–42	18–35	12–25
No. 100 (150 micro m)	15–30	10–21	7–18
No. 200 (75 micro m)	10–20	5–15	5–15
Residual asphalt content Percent dry aggregate	10–16	7.5–13.5	6.5–12
Pounds of aggregate per square yard	6–10	10–15	15–20
Kilograms of aggregate per square meter	3.2–5.4	5.4–8.1	8.1–10.8

* *

Precautions shall be taken to prevent segregation of the aggregate in storing and handling. The stockpile shall be kept in areas that drain readily.

626–2.2 FILLER. If filler, in addition to that naturally present in the aggregate, is necessary, it shall meet the requirements of ASTM D 242 and shall be used in the minimum amounts required. Mineral filler shall only be used if needed to improve the workability of the mix or to improve the gradation of the aggregate. The filler shall be considered as part of the blended aggregate.

626–2.3 EMULSIFIED ASPHALT. The emulsified asphalt shall conform to the requirements of ASTM D [ ] for type [ ] emulsion.

* *

The Engineer shall specify the type of emulsion and the controlling specification.

Cationic emulsions conforming to the requirements of ASTM D2397 for Type CSS–1 or CSS–1h are preferred for use in moderate or hot climates.

Anionic emulsions conforming to the requirements of ASTM D977 for Type SS–1 or SS–1h may be used for colder climatic areas.

* *

626–2.4 WATER. All water used in making the slurry shall be potable and free from–harmful soluble salts.

626–2.5 TACK COAT. The tack coat shall be a diluted asphalt emulsion of the same type specified for the slurry mix. The ratio of asphalt emulsion to water shall be 1 to 3.

CONSTRUCTION METHODS

626–3.1 WEATHER LIMITATIONS. The slurry seal shall not be applied if either the pavement or the air temperature is 55° F (13° C) or below or when rain is imminent.

* *

The Engineer should not specify a lower permissible temperature since slurry placed at lower temperatures usually will not cure properly due to poor dehydration and poor asphalt coalescence.

* *

626-3.2 EQUIPMENT AND TOOLS. All equipment, tools, and machines used in the performance of this work shall be maintained in satisfactory working order at all times. Descriptive information on the slurry mixing and applying equipment to be used shall be submitted to the Engineer for approval not less than 10 days before work starts.

a. Pressure Distributors. Pressure distributors used for application of the diluted asphalt emulsion tack coat shall be self-propelled, equipped with pneumatic tires, and capable of uniformly applying 0.05 to 0.15 gallon per square yard (0.23 to 0.68 liter per square meter) of the diluted emulsion over the required width of application. Distributors shall be equipped with tachometers, pressure gages, and volume-measuring devices.

b. Slurry Mixing Equipment. The slurry mixing machine shall be a continuous flow mixing unit capable of accurately delivering a predetermined proportion of aggregate, water, and asphalt emulsion to the mixing chamber and of discharging the thoroughly mixed product on a continuous basis. The aggregate shall be prewetted immediately prior to mixing with the emulsion. The mixing unit of the mixing chamber shall be capable of thoroughly blending all ingredients together. No excessive mixing shall be permitted. The mixing machine shall be equipped with an approved fines feeder that provides an accurate metering device or method to introduce a predetermined proportion of mineral filler into the mixer at the same time and location that the aggregate is fed into the mixer. The fines feeder shall be used whenever added mineral filler is part of the aggregate blend.

The mixing machine shall be equipped with a water pressure system and fog-type spray bar adequate for complete fogging of the surface with an application of 0.05 to 0.10 gallon per square yard (0.23 to 0.45 liter per square meter) preceding the spreading equipment.

Sufficient machine storage capacity to mix properly and apply a minimum of 5 tons (4 500 kg) of the slurry shall be provided. Proportioning devices shall be calibrated prior to placing the slurry seal.

c. Slurry Spreading Equipment. Attached to the mixing machine shall be a mechanical-type squeegee distributor equipped with flexible material in contact with the surface to prevent loss of slurry from the distributor. It shall be maintained to prevent loss of slurry on varying grades and crown by adjustments to assure uniform spread. There shall be a lateral control device and a flexible strike-off capable of being adjusted to lay the slurry at the specified rate of application. The spreader box shall have an adjustable width. The box shall be kept clean, and built-up asphalt and aggregate on the box shall not be permitted. The use of burlap drags or other drags shall be approved by the Engineer.

d. Roller. The roller shall be a pneumatic-tired roller capable of exerting a contact pressure during rolling of 50 pounds per square inch (350 000 newtons per square meter).

e. Auxiliary Equipment. Other tools or equipment such as brushes, hand squeegees, hose equipment, tank trucks, water distributors and flushers, power blowers, barricades, etc., shall be provided as required.

626-3.3 EQUIPMENT CALIBRATION. Each slurry mixing unit to be used on the project shall be calibrated in the presence of the Engineer prior to construction. Previous calibration documentation covering the exact materials to be used may be accepted by the Engineer provided they were made during the calendar year. The documentation shall include an individual calibration of each material at various settings, which can be related to the machines metering devices. No machine will be allowed to work on the project until the calibration has been completed and/or accepted.

626-3.4 CLEANING EXISTING SURFACE. Prior to placing the tack coat and slurry seal coat, unsatisfactory areas shall be repaired and the surface shall be cleaned of dust, dirt, or other loose foreign matter, grease, oil, or any type of objectionable surface film. Any standard cleaning method will be acceptable

except that water flushing will not be permitted in areas where considerable cracks are present in the pavement surface.

Any painted stripes or markers on the surface to be treated shall be removed before applying the tack coat.

When the surface of the existing pavement or base is irregular or broken, it shall be repaired or brought to uniform grade and cross section as directed by the Engineer. Cracks wider than 3/8 inch (9 mm) shall be sealed with compatible joint sealer prior to applying the slurry seal.

626-3.5 APPLICATION OF BITUMINOUS TACK COAT. Following the preparation for sealing, application of the diluted emulsion tack coat shall be made by means of a pressure distributor in amounts between 0.05 and 0.15 gallon per square yard (0.23 to 0.68 liter per square meter) as directed by the Engineer. The tack coat shall be applied, at least, 2 hours before the slurry seal, but within the same day.

626-3.6 COMPOSITION OF SLURRY MIX. No slurry seal for payment shall be placed until a mix design has been approved by the Engineer. The mix design shall be developed by a laboratory with experience in designing slurry seal mixes and a signed copy submitted in writing by the Contractor to the Engineer at least 10 days prior to the start of operations.

The laboratory report must indicate the proportions of aggregates, mineral filler (min and max), water (min and max) and asphalt based on the dry aggregate weight. It shall also report the quantitative effects of moisture content on the unit weight of the aggregate (bulking effects). The mix design shall be in effect until modified in writing by the Engineer. Should a change in sources of materials be made, a new design mix shall be established before the new material is used.

The percent of aggregate passing each sieve shall not vary more than ±4.0 percent from the mix design formula. The residual asphalt content shall not vary more than ±1.0 percent from the mix design quantity.

* *

The main items of design in emulsified asphalt slurry seals are aggregate gradation, emulsified asphalt content, and consistency of the mixture. The aggregates, emulsified asphalt, and water should form a creamy-textured slurry that, when spread, will flow in a wave ahead of the strike off squeegee. This will allow the slurry to flow down into the cracks in the pavement and fill them before the strike-off passes over. Technical Bulletin No. 111, "Outline Guide Design Procedure for Slurry Seal," published by the International Slurry Seal Association contains information to aid designers of slurry mixes.

* *

626-3.7 TEST SECTIONS. Test sections shall be placed prior to the start of the slurry seal work in the presence of the Engineer. The test area will be designated by the Engineer and will be located on the existing pavement.

Test strips shall be made by each machine after calibration. Samples of the slurry seal shall be taken and the mix consistency and proportions verified. The rate of application will also be verified. If any test does not meet specification requirements, additional tests shall be made at the Contractor's cost until an acceptable test strip is placed.

626-3.8 APPLICATION OF SLURRY SEAL COAT. The surface shall be prewet by fogging ahead of the slurry spreader box. Water used in prewetting the surface shall be applied at such a rate that the entire surface is damp with no apparent flowing water in front of the slurry spreader box. The slurry mixture shall be of the desired consistency when deposited on the surface, and no additional elements shall be added. Total time of mixing shall not exceed 5 minutes. A sufficient amount of slurry shall be carried in all parts of the spreader box at all times so that complete coverage of all surface voids and cracks is obtained. Care shall be taken not to overload the spreader box which shall be towed at a slow and uniform rate not to exceed 5 miles per hour (8 kilometers per hour). No lumping, balling, or unmixed aggregate shall be permitted. No segregation of the emulsion and aggregate fines from the coarse aggregate will be permitted. If the coarse aggregate settles to the bottom of the mix, the slurry will be removed from the pavement surface. A sufficient amount of slurry shall be fed in the box to keep a full supply against the full width of the squeegee. The mixture shall not be permitted to overflow the front sides of the spreader box. No excessive break-

ing of the emulsion will be allowed in the spreader box. No streaks such as caused by oversized aggregate will be left in the finished pavement.

Adjacent lanes shall be lapped at the edges a minimum of 4 inches (100 mm) to provide complete sealing at the overlap. All edges shall be feathered with hand squeegees.

After application of the slurry seal, the surface shall be rolled with a pneumatic-tired roller a minimum of 4 coverages. The roller should be operated at a tire pressure of 50 pounds per square inch (350 000 kPa).

* *

Generally, where normal traffic will iron out the slurry and close any hairline cracks of dehydration, it is not necessary to roll a normal thickness (1/4 inch (6 mm) or less) of slurry seal.

However, in some instances the somewhat lattice-like structure of the slurry should probably be densified by pneumatic-tire rolling to improve durability, such as areas subjected to severe braking or acceleration. Rolling of the slurry seal is at the option of the Engineer.

* *

The fresh slurry seal application shall be protected by barricades and markers and permitted to dry for 4 to 24 hours, depending on weather conditions. Any damage to uncured slurry will be repaired at the Contractor's expense.

In areas where the spreader box cannot be used, the slurry shall be applied by means of a hand squeegee. Any joints or cracks that are not filled by the slurry mixture shall be filled by using hand squeegees. No excessive buildup or unsightly appearance shall be permitted on longitudinal or transverse joints. Upon completion of the work, the seal coat shall have no holes, bare spots, or cracks through which liquids or foreign matter could penetrate to the underlying pavement. The finished surface shall present a uniform and skid resistant texture satisfactory to the Engineer. All wasted and unused material and all debris shall be removed from the site prior to final acceptance.

* *

The cured slurry shall have a homogeneous appearance, fill all cracks, adhere firmly to the surface, and have skid resistant texture.

* *

626-3.9 EMULSION MATERIAL (CONTRACTOR'S RESPONSIBILITY). Samples of the emulsion that the Contractor proposes to use, together with a statement as to its source, must be submitted, and approval must be obtained before using such material. The Contractor shall furnish the Engineer a manufacturer's certified report for each consignment of the emulsion. The manufacturer's certified report shall not be interpreted as a basis for final acceptance. All such reports shall be subject to verification by testing samples of the emulsion as received for use on the project.

METHOD OF MEASUREMENT

626-4.1 The bituminous material for emulsified asphalt shall be measured by the **[gallon (liter)] [ton (kg)] [volume shall be corrected to the value at 60° F (15° C) in accordance with Table IV-3 of the Asphalt Institute Manual MS-6. Only the actual quantity of undiluted emulsified asphalt will be measured for payment.]**

626-4.2 Aggregate shall be measured by the ton (kg).

BASIS OF PAYMENT

626-5.1 Payment shall be made at the contract unit price per **[gallon (liter)] [ton (kg)]** for the emulsified asphalt and at the contract price per ton (kg) for aggregate. These prices shall be full compensation for

furnishing all materials, for preparing, mixing, and applying these materials, and for all labor, equipment, tools, and incidentals necessary to complete the item.

Payment will be made under:

Item P-626-5.1	Emulsified Asphalt for Tack Coat--per **[gallon (liter)] [ton (kg)]**
Item P-626-5.2	Emulsified Asphalt for Slurry Coat--per **[gallon (liter)] [ton (kg)]**
Item P-626-5.3	Aggregate--per ton (kg)

TESTING REQUIREMENTS

ASTM C 88	Soundness of Aggregates by Use of Sodium Sulfate or Magnesium Sulfate
ASTM C 128	Specific Gravity and Absorption of Fine Aggregate
ASTM C 131	Resistance to Abrasion of Small Size Course Aggregate by Use of the Los Angeles Machine
ASTM C 136	Sieve or Screen Analysis of Fine and Coarse Aggregates
ASTM D 2419	Sand Equivalent Value of Soils and Fine Aggregate

MATERIAL REQUIREMENTS

The Asphalt Institute Manual MS-6	Table IV-3 Temperature-Volume Corrections for Emulsified Asphalts
ASTM D 242	Mineral Filler for Bituminous Paving Mixtures
ASTM D 977	Emulsified Asphalt
ASTM D 2397	Cationic Emulsified Asphalt

PART VIII—FENCING

ITEM F-160 WIRE FENCE WITH WOOD POSTS

(Classes A and B Fences)

DESCRIPTION

160-1.1 This item covers the requirements for furnishing materials and constructing new wire fences and gates with wood posts in accordance with the details included herein and as shown on the plans. The class of fence to be erected shall be either Class A, woven wire fencing surmounted by two strands of barbed wire, or Class B, four strands of barbed wire, as indicated on the plans and in the bid proposal.

MATERIALS

160-2.1 WIRE.

a. Woven Wire (Zinc-coated). The woven wire fence shall be 7-bar, 26-inch (66 cm) field fence with top and bottom wires No. 10 ASW gauge, and filler and stay wires No. 12 1/2 ASW gauge. Stay wires shall be spaced 6 inches (150 mm) apart. All wires shall be smooth galvanized steel wire, conforming to Fed. Spec. RR-F-221, Type B. All wires shall be two-dip and shall be spaced as shown on the plans.

b. Barbed Wire (Zinc-coated). Zinc-coated barbed wire shall be 2-strand twisted No. 12 1/2 ASW gauge galvanized steel wire with 4-point barbs of No. 14 ASW gauge galvanized steel wire. All wire shall conform to Fed. Spec. RR-F-221, Type A. The barbs shall be spaced approximately 4 inches (100 mm) apart.

c. Barbed Wire (Copper-covered). Copper-covered steel barbed wire shall conform to Fed. Spec. RR-F-221, Type A.

d. Barbed Wire (Aluminum-coated). Aluminum-coated steel-barbed wire shall be 2-strand twisted No. 12 1/2 ASW gauge. The 4-point barbs of No. 14 ASW gauge aluminum-coated steel wire shall be spaced approximately 5 inches (125 mm) apart. The steel wire shall have a tensile strength of between 60,000 and 80,000 pounds per square inch (413 400 and 551 200 kPa), and the aluminum coating shall have a minimum weight of 0.30 ounce per square foot (0.07 kg/square meter) of wire surface on the No. 12 1/2 ASW gauge line wires and 0.25 ounce per square foot (0.06 kg/square meter) of wire surface on the No. 14 ASW gauge barbs.

e. Bracing Wire (Zinc-coated). Wire used for cable for bracing shall be No. 9 smooth galvanized soft wire.

160-2.2 GATES AND HARDWARE. Gates shall be constructed of galvanized steel tubing conforming to Fed. Spec. RR-F-191 and shall be the size shown on the plans. Heavily galvanized hinges and latches for wood posts shall be furnished with each gate. Either a bolt or lag screw hinge shall be used, and either a wing or butterfly latch shall be furnished.

160-2.3 POSTS.

a. Species. All posts shall be one of the following species of wood, unless otherwise noted in the proposal.

Group I	Group II
Cedar	Douglas-fir
Chestnut	Gum, Red
Cypress, Southern	Larch, Western
Locust, Black	Pine, Southern Yellow
Osage-orange	Pine, Lodgepole

Redwood	Tamarack
Yew, Pacific	Ash
Honeylocuast	Maple, Sugar
Oak, White	Oak, Red
Mulberry	Spruce
Live Oak	

Posts of Group I may be used untreated, provided at least 75% of the wood is heartwood. Posts of less than 75% heartwood of Group I shall be given a preservative treatment for the part of the post that will have contact with the ground line in accordance with the method specified under subparagraph e(1) below. Posts of Group II shall be given a preservative treatment in accordance with the method specified under subparagraph e(2) below.

b. Quality. Posts shall be peeled, sound, straight-grained, free from decay, cracks, and splits; shakes shall not be in excess of 1/4 inch (6 mm) wide and 3 feet (90 cm) long. Checks (lengthwise separations of the wood in a generally radial direction) are permitted, provided they are not injurious.

c. Dimensions. All posts shall be of the length shown on the plans. Posts shall have the minimum top diameters shown on the plans or as specified. Sawed and split posts are acceptable in lieu of round posts provided their dimensions are such that round posts of required diameter could be turned therefrom.

d. Manufacture. Outer bark shall be completely removed from all posts including depressions. Inner bark shall be removed from all post surfaces to be treated, except inner bark may remain in depressions. The amount of wood shaved off in the removal of inner bark shall be held to a minimum.

e. Treatment.

(1) Butt treatment. All timber shall be thoroughly seasoned and dry (22% maximum moisture content) before applying preservative treatment. The treatment shall be by a process at least equal to a hot and cold bath process. The hot bath temperature shall be from 200° to 230° F (90 to 110° C) for a duration of 45 minutes, and the cold bath temperature not over 120° F (50° C) for a duration of 45 minutes. The preservative shall be either coal-gas tar or coke-oven tar creosote conforming to American Wood Preservers Association (AWPA) Specification No. 4 for Grade 1 creosote; or a 5% minimum, by weight, pentachlorophenol petroleum solution made by either mixing a liquid concentrate of pentachlorophenol in fuel oil or kerosene, or by dissolving pentachlorophenol crystals of technical purity in suitable fuel oil solvents, as specified by AWPA.

(2) Full length treatment. Posts shall be conditioned by air seasoning, steaming, or heating in oil in a manner that prevents injurious checking, splitting, or warping before treating. The treatment, care and preservative shall be in accordance with Fed. Spec. TT-W-571.

160-2.4 BRACES. Cleats, gate stops, and braces shall be of the size shown on the plans. They shall be of the same species and quality specified for the posts or approved by the Engineer, and they shall be free from knots larger than one-third the width of the piece. Gate stops shall be made of posts of suitable length. Braces may be made of posts of suitable length or of sawed lumber. All cleats, gate stops, and any braces in contact with the ground and for a distance of at least 6 inches (150 mm) above the ground shall be treated by the hot and cold bath process, specified herein for posts. The wire used in cable for bracing shall conform to 160-2.1e.

160-2.5 STAPLES. The staples shall be No. 9 galvanized steel wire, 1 inch (25 mm) long for hardwood posts and 1-1/2 inches (37 mm) long for use in softwood posts.

CONSTRUCTION METHODS

160-3.1 GENERAL. The fence shall be constructed in accordance with the details on the plans and as specified herein using new materials, and all work shall be performed in a workmanlike manner, satisfactory

to the Engineer. Prior to the beginning of the work or upon the request of the Contractor, the Engineer shall locate the position of the work by establishing and marking the property line or fence line. When directed, the Contractor shall span the opening below the fence with barbed wire fastened to posts of extra length at locations of small natural or drainage ditches where it is not practical to conform the fence to the general contour of the ground surface. The new fence shall be permanently tied to the terminals of existing fences whenever required by the Engineer. The finished fence shall be plumb, taut, true to line and ground contour, and complete in every detail. When directed, the Contractor shall stake down the woven wire fence at several points between posts.

When directed, in order to keep stock on adjoining property enclosed at all times, the Contractor shall arrange the work so that construction of the new fence will immediately follow the removal of existing fences. The length of unfenced section at any time shall not exceed 300 feet (90 m) or such length that the stock can be kept in the proper field. The work shall progress in this manner, and at the close of the working day, the newly constructed fence shall be tied to the unremoved existing fence. Any openings in the fence shall be guarded when stock is using the adjoining property.

160-3.2 CLEARING FENCE LINE. The site of the fence shall be sufficiently clear of obstructions, and surface irregularities shall be graded so that the fence will conform to the general contour of the ground. The fence line shall be cleared to a minimum width of 2 feet (60 cm) on each side of the centerline of the fence. This clearing shall consist of the removal of all stumps, brush, rocks, trees, or other obstructions which will interfere with proper construction of the fence. Stumps within the cleared area of the fence line shall be grubbed or excavated. The bottom of the fence shall be placed a uniform distance above ground as specified in the plans. When shown on the plans or as directed by the Engineer, the existing fences which coincide with, or are in a position to interfere with, the new fence location shall be removed by the Contractor as part of the construction work, unless such removal is listed as a separate item in the bid schedule. All holes remaining after post and stump removal shall be refilled with suitable soil, gravel, or other material acceptable to the Engineer and shall be compacted properly with tampers.

The work shall include the handling and disposal of all material cleared, of excess excavation and the removal of spoiled material regardless of the type, character, composition, or condition of such material encountered.

160-3.3 SETTING POSTS. Posts shall be set with large ends down, plumb, and in good line on the side on which the wire is to be fastened. Posts shall be set full depth and shall not be cut off to eliminate rock or other excavation. Where rock is encountered, it shall be removed, even if blasting is necessary, to provide full-depth and full-size holes. The bottoms of all posts shall be cut off square. The diameter of the holes shall be at least 6 inches (150 mm) larger than the diameter of the posts. When cleats are used on posts, the holes shall be dug large enough to accommodate them. After posts are placed and lined, the holes shall be backfilled with suitable material which shall be properly compacted by the use of tampers. The posts adjacent to end, corner, anchor, and gate posts shall be set and braced with braces and wire, as shown on the plans. No extra compensation shall be made for rock excavation. Rock excavation shall not be grounds for extension of time.

160-3.4 ANCHORING. Corner, end, gate, and adjacent intermediate posts shall be anchored, by gaining and spiking cleats to the sides of the posts, as indicated on the plans. No cleats will be required on other intermediate posts or on anchor posts.

160-3.5 BRACING. End, corner, anchor, and gate posts shall be braced by using a post of sufficient length or a piece of sawed lumber of the proper size, together with a wire cable. The wooden brace shall be gained and securely spiked into the end, corner, anchor, or gate posts and into the next intermediate posts about 6 inches (150 mm) from the top of the respective posts. A cable made of a double strand of galvanized soft wire shall be looped around the end, corner, anchor, or gate post near the ground and around the next intermediate post about 12 inches (300 mm) from the top. After the cable has been stapled in this position, it shall be twisted until tight. The staples used to hold the cable shall be not less than 1-1/2 inches (37 mm) long. The tool used for twisting the cable shall be left in placed to permit later adjustment of bracing if found necessary. Anchor posts shall be set at approximately 500-foot (150 m) intervals and braced to the adjacent posts. Posts shall be braced before the wire fencing is placed.

160-3.6 INSTALLING WIRE. The wires shall be placed on the side of the posts away from the airport or as directed. The wire fence shall be placed on the posts at the height indicated on the plans. Longitudinal wires shall be installed parallel and drawn uniformly taut. The vertical stay wires of the woven wire fencing shall be straight and vertical. At end and gate posts the woven wire and barbed wire shall be wrapped once around the post; each longitudinal wire shall be stapled at least three times and the ends of these wires shall be tied with a snug, tight twist. Each longitudinal wire shall be stapled to each intermediate post with one steel wire staple; at the corner and anchor posts, two or more stapled shall be used. The top strand of barbed wire of all fences shall be stapled with two staples in each post. All staples shall be set diagonally with the grain of the wood and driven up tight. After the fence has been erected, the tops of the wood posts shall be sawed off with a 1-to-3 pitch. The bottom wire of the wire fencing shall clear the ground by not more than 4 inches (100 mm) or less than 1 inch (25 mm) at any place.

160-3.7 SPICING WIRE. Wire splices in longitudinal wires will be permitted if made with an approved galvanized bolt-clamp splice or a wire splice made as follows: The end of the wires shall be carried 3 inches (75 mm) past the splice tool and wrapped around the other wire away from the tool for at least six turns in opposite directions. After the tool is removed, the space occupied by it shall be closed by pulling the ends together. The unused ends of the wires shall be cut close to make a neat, workmanlike job. Woven wire shall be spliced only at posts.

160-3.8 INSTALLING GATES. The gates shall be hung on gate fittings, as shown on the plans. Fittings on the gate posts shall be clamped, screwed, or bolted to prevent slipping. Gates shall be so erected as to swing in the direction indicated and shall be provided with gate stops, as specified or as shown on the plans. Gates shall be erected locations shown on the plans.

160-3.9 EXISTING FENCE CONNECTIONS. Wherever the new fence joins an existing fence, either at a corner or at the intersection of straight fence lines, a corner or anchor post shall be set at the junction and braced and anchored the same as herein described for corner posts.

If the connection is made at other than the corner of the new fence, the last span of the old fence shall contain a brace span.

160-3.10 CLEANING UP. The Contractor shall remove from the vicinity of the completed work all tools, buildings, equipment, etc., used during construction.

METHOD OF MEASUREMENT

160-4.1 Fences, Class A (Wood Posts) or Class B (Wood Posts), shall be measured in place from outside to outside of end posts or corner posts and shall be the length of fence actually constructed, except for the space occupied by the gates.

Driveway gates and walkway gates shall be measured in units for each gate installed and accepted.

BASIS OF PAYMENT

160-5.1 Payment will be made at the contract unit price per linear foot (meter) for Class A or Class B wire fence. This price shall be full compensation for furnishing all materials and for preparation, erection, and installation of these materials, and for all labor, equipment, tools and incidentals necessary to complete the item.

Payment will be made at the contract unit price per each for driveway or for walkway gates. This price shall be full compensation for furnishing all materials and for all preparation, erection, and installation of these materials and for all labor, equipment, tools, and incidentals to complete the item.

Payment will be made under:

Item F-160-5.1	Fence, Class A--per linear foot (meter)
Item F-160-5.2	Fence, Class B--per linear foot (meter)
Item F-160-5.3	Driveway Gates--per each
Item F-160-5.4	Walkway Gates--per each

MATERIAL REQUIREMENTS

Fed.Spec.RR-F-191/Gen.	Fencing, Wire and Post, Metal (and Gates, Chain-Link Fence Fabric, and Accessories)
Fed.Spec. RR-F-221	Fencing, Wire, Fence Post and Accessories (Barbed Wire, Woven Wire and Netting)
Fed.Spec. TT-W-571	Wood Preservation: Testing Practices

ITEM F-161 WIRE FENCE WITH STEEL POSTS

(Classes C and D Fences)

DESCRIPTION

161-1.1 This item covers the requirements for furnishing materials and constructing new wire fences and gates with steel posts in accordance with the details included herein and as shown on the plans. The class of fence to be erected shall be either Class C, woven wire fencing surmounted by two strands of barbed wire, or Class D, four strands of barbed wire, as indicated on the plans and in the bid proposal.

MATERIALS

161-2.1 WIRE.

a. Woven Wire (Zinc-coated). The woven wire fencing shall be 7-bar, 26-inch (66 cm) field fence with top and bottom wires No. 10 ASW gauge, and filler and stay wires No. 12 1/2 ASW gauge. Stay wires shall be spaced 6 inches (150 mm) apart. All wire shall be smooth galvanized steel wire conforming to Fed. Spec. RR-F-221, Type B. All wires shall be two-dip and spaced as shown on the plans.

b. Barbed Wire (Zinc-coated). Zinc-coated barbed wire shall be 2-strand twisted No. 12 1/2 ASW gauge galvanized steel wire with 4-point barbs of No. 14 ASW gauge galvanized steel wire. All wire shall conform to Fed. Spec. RR-F-221, Type A. The barbs shall be spaced approximately 4 inches (100 mm) apart.

c. Barbed Wire (Copper-covered). Copper-covered steel barbed wire shall conform to Fed. Spec. RR-F-221, Type A.

d. Barbed Wire (Aluminum-coated). Aluminum-coated steel barbed wire shall be 2-strand twisted No. 12 1/2 ASW gauge. The 4-point barbs of No. 14 ASW gauge aluminum-coated steel wire shall be spaced approximately 5 inches (125 mm) apart. The steel wire shall have a tensile strength of between 60,000 and 80,000 pounds per square inch (413 400 and 551 200 kPa) and the aluminum coating shall have a minimum weight of .30 ounce per square foot (0.07 kilogram per square meters) of wire surface on the No. 12 1/2 ASW gauge line wire and .25 ounce per square foot (0.06 kg/square meter) of wire surface on the No. 14 ASW gauge barbs.

e. Bracing wire (Zinc-coated). Wire used for cable for bracing shall be No. 9 smooth galvanized soft wire.

161-2.2 FENCE POSTS, GATES, RAILS, BRACES, AND ACCESSORIES. These items, when specified, shall conform to the requirements of Fed. Spec. RR-F-191 and shall be zinc-coated.

161-2.3 CONCRETE. Concrete shall be of a commercial grade with a minimum 28-day compressive strength of 2500 psi.

CONSTRUCTION METHODS

161-3.1 GENERAL. The fence shall be constructed in accordance with the details on the plans and as specified herein using new materials, and all work shall be performed in a workmanlike manner satisfactory to the Engineer. Prior to the beginning of the work or upon the request of the Contractor, the Engineer shall locate the position of the work by establishing and marking the property line or fence line. When directed, the Contractor shall span the opening below the fence with barbed wire fastened to stakes of the required length at locations of small natural or drainage ditches where it is not practical to conform the fence to the general contour of the ground surface. The new fence shall be permanently tied to the terminals of existing fences whenever required by the Engineer. The finished fence shall be plumb, taut, true to line

and ground contour, and complete in every detail. When directed, the Contractor shall stake down the woven wire fence at several points between posts.

When directed, in order to keep stock on adjoining property enclosed at all times, the Contractor shall arrange the work so that construction of the new fence will immediately follow the removal of existing fences. The length of unfenced section at any time shall not exceed 300 feet (90 m) or such length that the stock can be kept in the proper field. The work shall progress in this manner and at the close of the working day the newly constructed fence shall be tied to the existing fence. Any openings in the fence shall be guarded when stock is using the adjoining property.

161-3.2 CLEARING FENCE LINE. The site of the fence shall be sufficiently cleared of obstructions, and surface irregularities shall be graded so that the fence will conform to the general contour of the ground. The fence line shall be cleared to a minimum width of 2 feet (60 cm) on each side of the centerline of the fence. This clearing shall consist of the removal of all stumps, brush, rocks, trees, or other obstructions which will interfere with proper construction of the fence. Stumps within the cleared area of the fence shall be placed a uniform distance above ground, as specified in the plans. When shown on the plans or as directed by the Engineer, the existing fences which coincide with, or are in a position to interfere with, the new fence location shall be removed by the Contractor as a part of the construction work unless such removal is listed as a separate item in the bid schedule. All holes remaining after post and stump removal shall be refilled with suitable soil, gravel, or other material acceptable to the Engineer and shall be compacted properly with tampers.

The work shall include the handling and disposal of all material cleared, excavated or removed, regardless of the type, character, composition, or condition of such material encountered.

161-3.3 INSTALLING POSTS. All posts shall be spaced as shown on the plans. Corner, brace, anchor, end, and gate posts shall be set in concrete bases as shown on the plans. The top of the base shall be slightly above the ground surface, trowel finished, and sloped to drain. Holes of full depth and size for the concrete bases for posts shall be provided even if blasting of rock or other obstructions is necessary. All line posts may be either driven or set in dug holes to a penetration of 3 feet (90 cm). All post setting shall be done carefully and to true alignment. Dirt removed for placing posts,anchor bars, flanges, etc., shall be replaced, tamped, and leveled. When posts are driven, care shall be exercised to prevent marring or buckling of the posts. Damaged posts shall be replaced at the Contractor's expense. No extra compensation will be made for rock excavation. Rock excavation shall not be grounds for extension of time.

161-3.4 BRACING. All corner, anchor, end, and gate posts shall be braced as shown on the plans. Anchor posts shall be set at approximately 500-foot (150 meters) intervals and braced to the adjacent posts.

161-3.5 INSTALLING WIRE. All barbed wire and woven wire shall be placed on the side of the post away from the airport, or as directed, at the height indicated on the plans. The woven wire shall be carefully stretched and hung without sag and with true alignment. Care shall be taken not to stretch the wire so tightly that it will break in cold weather or pull up corner and brace posts. All horizontal wires shall be fastened securely to each post by fasteners or clips designed for use with the posts furnished. The woven wire shall be wrapped around end, corner, and gate posts, and the ends of all horizontal wires shall be tied with snug, tight twists. The wire shall be secured to prevent slipping up and down the post. Barbed wire strands shall be stretched and each strand secured to each post to prevent slipping out of line or becoming loose. At end, corner, and gate posts the barbed wire shall be securely wrapped and anchored once abut the post from outside and secured against slipping by tying the ends with snug, tight twists. However, on spans of less than 100 feet (30 m) both ends of the span need not be wrapped around the posts. The bottom wire of the woven wire fencing shall clear the ground by not more than 4 inches (100 mm) or less than 1 inch (25 mm) at any place.

161-3.6 SPLICING WIRE. Splices in barbed and woven wire will be permitted if made with an approved galvanized bolt-clamp splice or a wire splice made as follows: The ends of each wire shall be carried 3 inches (75 mm) past the splice tool and wrapped around the other wire for at least six turns in opposite directions. After the tool is removed, the space occupied by it shall be closed by pulling the ends together. The unused ends of the wire shall be cut close to make a neat, workmanlike job.

161-3.7 INSTALLING GATES. The gates shall be hung on gate fittings as shown on the plans. They shall be attached in such a manner that the gate cannot be lifted off the hinges. Gates shall be erected to swing in the direction indicated and shall be provided with gate stops, as specified or as shown on the plans. Gates shall be erected at locations shown on the plans.

161-3.8 EXISTING FENCE CONNECTIONS. Wherever the new fence joins an existing fence, either at a corner or at the intersection of straight fence lines, a corner or anchor post shall be set at the junction and braced and anchored the same as herein described for corner posts.

If the connection is made at other than the corner of the new fence, the last span of the old fence shall contain a brace span.

161-3.9 CLEANING UP. The Contractor shall remove from the vicinity of the completed work all tools, buildings, equipment, etc., used during construction.

METHOD OF MEASUREMENT

161-4.1 Fences, Class C (Steel Posts), or Class D (Steel Posts), shall be measured in place from outside to outside of end posts or corner posts and shall be the length of fence actually constructed, except for the space occupied by the gates.

Driveway gates and walkway gates shall be measured in units for each gate installed and accepted.

BASIS OF PAYMENT

161-5.1 Payment shall be made at the contract unit price per linear foot (meter) for Class C or Class D wire fence. This price shall be full compensation for furnishing all materials and for all preparation, erection, and installation of these materials, and for all labor, equipment, tools, and incidentals necessary to complete the item.

Payment will be made at the contract unit price per each for driveway or for walkway gates. This price shall be full compensation for furnishing all materials and for all preparation, erection, and installation of these materials, and for all labor, equipment, tools, and incidentals necessary to complete the item.

Payment will be made under:

Item F-161-5.1	Fence, Class C--per linear foot (meter)
Item F-161-5.2	Fence, Class D--per linear foot (meter)
Item F-161-5.3	Driveway Gates--per each
Item F-161-5.4	Walkway Gates--per each

MATERIAL REQUIREMENTS

Fed.Spec. RR-F-191/Gen	Fencing, Wire and Post, Metal (and Gates, Chain-Link Fence Fabric, and Accessories)
Fed.Spec. RR-F-221	Fencing, Wire, Fence Post and Accessories (Barbed Wire, Woven Wire and Netting)

ITEM F-162 CHAIN-LINK FENCES

DESCRIPTION

162-1.1 This item shall consist of furnishing and erecting a chain-link fence in accordance with these specifications and the details shown on the plans and in conformity with the lines and grades shown on the plans or established by the Engineer.

MATERIALS

162-2.1 FABRIC. The fabric shall be woven with a 9-gauge **[galvanized steel wire] [aluminum-coated steel wire] [aluminum alloy] [polyvinyl chloride (PVC)-coated steel]** wire in a 2-inch (50 mm) mesh and shall meet the requirements of [ ].

* *

Galvanized steel fabric shall conform to the requirements of ASTM A 392, Class II.

Aluminum-coated steel fabric shall conform to the requirements of ASTM A 491.

Aluminum alloy fabric shall conform to the requirements of ASTM B 211, alloy 6061-T94.

Polyvinyl chloride-coated steel shall conform to the requirements of Fed. Spec. RR-F-191/1.

* *

162-2.2 BARBED WIRE. Barbed wire shall be 2-strand 12-1/2 gauge **[zinc-coated] [aluminum-coated]** wire with 4-point barbs and shall conform to the requirements of [ ].

* *

Zinc-coated barbed wire shall conform to the requirements of ASTM A 121, Class 3.

Aluminum-coated barbed wire shall conform to the requirements of ASTM A 585, Class II.

* *

162-2.3 POSTS, RAILS AND BRACES. Posts, rails, and braces furnished for use in conjunction with zinc-coated steel fabric or with aluminum-coated steel fabric shall be of zinc-coated steel or acrylic-coated steel pipe, and those furnished for use in conjunction with aluminum alloy fabric shall be aluminum alloy.

Line posts, rails, and braces shall be **[galvanized steel pipe] [acrylic-coated steel pipe] [vinyl-coated steel] [structural shapes] [roll formed] [aluminum alloy]** conforming to the requirements of [ ].

* *

Galvanized steel pipe shall conform to the requirements of ASTM A 120, Schedule 40, except the hydrostatic testing requirement is waved. Galvanizing shall be in accordance with ASTM A 123.

Acrylic-coated steel pipe shall conform to the requirements of Fed. Spec. RR-F-191/3 for Class I steel pipe, Grade B.

The steel used in all structural shapes shall conform to the requirements of ASTM A 572, Grade 45, and shall be galvanized in accordance with the requirements of ASTM A 123.

Roll-formed sections shall be fabricated from material meeting the requirements of ASTM A 570, Grade 45, and shall be galvanized in accordance with the requirements of ASTM A 123.

Aluminum alloy shall conform to the requirements of ASTM B 429, alloy 6063-T6, Schedule 40, for extruded pipe and tube.

Aluminum alloy shall conform to the requirements of ASTM B 221, alloy 6063-T6, for extruded bar, shape, and tube.

Vinyl-coated steel shall conform to the requirements of Fed. Spec. RR-F-191/3.

ASTM A 123 specifies a zinc coating weight of not less than 2.0 ounces per square foot (square meter). Fed. Spec. RR-F-191/3 specifies a zinc coating weight of not less than 1.0 ounces per square foot (square meter) for Grade B pipe with an external chromate coating of 30 micro-grams per square inch (square meter) and an acrylic coating of 0.0005 inches or greater.

* *

The dimensions of the posts, rails, and braces shall be in accordance with Tables I through VI of Fed. Spec. RR-F-191/3.

162-2.4 GATES. Gate frames shall consist of **[galvanized steel pipe] [acrylic-coated steel pipe] [aluminum alloy pipe]** and conform to the specifications for the same material under paragraph 162-2.3. The fabric shall be of the same type material as used in the fence.

162-2.5 WIRE TIES AND TENSION WIRES. Wire fabric ties, wire ties, and tension wire for use in conjunction with a given type of fabric shall be of the same material identified with the fabric type. The tension wire shall be 7-gauge coiled spring wire coated similarly to the respective wire fabric being used.

Wire fabric ties shall be hog rings, aluminum wire, or galvanized steel wire not less than 9 gauge.

All material shall conform to Fed. Spec. RR-F-191/4.

162-2.6 MISCELLANEOUS FITTINGS AND HARDWARE. Miscellaneous steel fittings and hardware for use with **[zinc-coated] [aluminum-coated]** steel fabric shall be of commercial grade steel or better quality, wrought or cast as appropriate to the article, and sufficient in strength to provide a balanced design when used in conjunction with fabric posts, and wires of the quality specified herein. **[All steel fittings and hardware shall be protected with a zinc coating applied in conformance with ASTM A 153.] [Miscellaneous aluminum fittings for use with aluminum alloy fabric shall be wrought or cast aluminum alloy.]** Barbed wire support arms shall withstand a load of 25 pounds (113 kg) applied vertically to the outermost end of the arm.

162-2.7 CONCRETE. Concrete shall be of a commercial grade with a minimum 28-day compressive strength of 2500 psi (13 700 kPa).

162-2.8 MARKING. Each roll of fabric shall carry a tag showing the kind of base metal (steel, aluminum, or aluminum alloy number), kind of coating, the gage of the wire, the length of fencing in the roll, and the name of the manufacturer. Posts, wire, and other fittings shall be identified as to manufacturer, kind of base metal (steel, aluminum, or aluminum alloy number), and kind of coating.

CONSTRUCTION METHODS

162-3.1 CLEARING FENCE LINE. All trees, brush, stumps, logs, and other debris which would interfere with the proper construction of the fence in the required location shall be removed a minimum width of 2 feet (60 mm) on each side of the fence centerline before starting fencing operations. The material removed and disposed of shall not constitute a pay item and shall be considered incidental to fence construction.

162-3.2 INSTALLING POSTS. All posts shall be set in concrete at the required dimension and depth and at the spacing shown on the plans.

* *

Posts should be spaced not more than 10 feet (3 m) apart and should be set a minimum of 36 inches (90 cm) in concrete footings. If the frost depth is greater than 36 inches (90 cm), the posts should be set accordingly. The posts should have a minimum of 3 inches (75 mm) of concrete cover.

* *

The concrete shall be thoroughly compacted around the posts by tamping or vibrating and shall have a smooth finish slightly higher than the ground and sloped to drain away from the posts. All posts shall be set plumb and to the required grade and alignment. No materials shall be installed on the posts, nor shall the posts be disturbed in any manner within 7 days after the individual post footing is completed.

Should rock be encountered at a depth less than the planned footing depth, a hole 2 inches (50 mm) larger than the greatest dimension of the posts shall be drilled to a depth of 12 inches (300 mm). After the posts are set, the remainder of the drilled hole shall be filled with grout, composed of one part portland cement and two parts mortar sand. Any remaining space above the rock shall be filled with concrete in the manner described above.

In lieu of drilling, the rock may be excavated to the required footing depth. No extra compensation shall be made for rock excavation.

162-3.3 INSTALLING TOP RAILS. The top rail shall be continuous and shall pass through the post tops. The coupling used to join the top rail lengths shall allow for expansion.

162-3.4 INSTALLING BRACES. Horizontal brace rails, with diagonal truss rods and turnbuckles, shall be installed at all terminal posts.

162-3.5 INSTALLING FABRIC. The wire fabric shall be firmly attached to the posts and braced in the manner shown on the plans. All wire shall be stretched taut and shall be installed to the required elevations. The fence shall generally follow the contour of the ground, with the bottom of the fence fabric no less than 1 inch (25 mm) or more than 4 inches (100 mm) from the ground surface. Grading shall be performed where necessary to provide a neat appearance.

At locations of small natural swales or drainage ditches and where it is not practical to have the fence conform to the general contour of the ground surface, longer posts may be used and multiple strands of barbed wire stretched thereon to span the opening below the fence. The vertical clearance between strands of barbed wire shall be 6 inches (150 mm) or less.

* *

Openings below the fence may also be spanned with barbed wire fastened to stakes.

* *

162-3.6 ELECTRICAL GROUNDS. Electrical grounds shall be constructed **[where a power line passes over the fence] [at 500-foot (150 m) intervals].** The ground shall be installed directly below the point of crossing. The ground shall be accomplished with a copperclad rod 8 feet (240 cm) long and a minimum of 5/8 inch (15 mm) in diameter driven vertically until the top is 6 inches (150 mm) below the ground surface. A No. 6 solid copper conductor shall be clamped to the rod and to the fence in such a manner that each element of the fence is grounded. Installation of ground rods shall not constitute a pay item and shall be considered incidental to fence construction.

* *

The Engineer shall indicate the location of all electrical grounds on the plans.

* *

METHOD OF MEASUREMENT

162-4.1 Chain-link fence will be measured for payment by the linear foot (meter). Measurement will be along the top of the fence from center to center of end posts, excluding the length occupied by gate openings.

Gates will be measured as complete units.

BASIS OF PAYMENT

162-5.1 Payment for chain-link fence will be made at the contract unit price per linear foot (meter).

Payment for driveway or walkway gates will be made at the contract unit price for each gate.

The price shall be full compensation for furnishing all materials, and for all preparation, erection, and installation of these materials, and for all labor equipment, tools, and incidentals necessary to complete the item.

Payment will be made under:

Item F-162-5.1	Chain-Link Fence--per linear foot (meter)
Item F-162-5.2	Driveway Gates--per each
Item F-162-5.3	Walkway Gates--per each

MATERIAL REQUIREMENTS

ASTM A 120	Pipe, Steel, Black and Hot-Dipped Zinc-Coated (Galvanized) Welded and Seamless, for Ordinary Uses
ASTM A 121	Zinc-Coated (Galvanized) Steel Barbed Wire
ASTM A 123	Zinc (Hot Galvanized) Coatings on Products Fabricated from Rolled, Pressed, and Forged Steel Shapes, Plates, Bars, and Strip
ASTM A 153	Zinc Coating (Hot-Dip) on Iron and Steel Hardware
ASTM A 392	Zinc-Coated Steel Chain-Link Fence Fabric
ASTM A 491	Aluminum-Coated Steel Chain-Link Fence Fabric
ASTM A 570	Hot-Rolled Carbon Steel Sheet and Strip Structural Quality
ASTM A 572	High-Strength Low-Alloy Columbium-Vanadium Steels of Structural Quality
ASTM A 585	Aluminum-Coated Steel Barbed Wire
ASTM B 211	Aluminum-Alloy Bar, Rod, and Wire
ASTM B 221	Aluminum-Alloy Extruded Bars, Rods, Wire Shapes and Tubes
Fed. Spec. RR-F-191/1	Fencing, Wire and Post, Metal (Chain-Link Fence Fabric)
Fed. Spec. RR-F-191/3	Fencing, Wire and Post, Metal (Chain-Link Fence Posts, Top Rails and Braces)
Fed. Spec. RR-F-191/4	Fencing, Wire and Post, Metal (Chain-Link Fence Accessories)

PART IX—DRAINAGE

ITEM D-701 PIPE FOR STORM DRAINS AND CULVERTS

DESCRIPTION

701-1.1 This item shall consist of the construction of pipe culverts and storm drains in accordance with these specifications and in reasonably close conformity with the lines and grades shown on the plans.

MATERIALS

701-2.1 Materials shall meet the requirements shown on the plans and specified below.

701.2.2 PIPE.

Metallic Coated Corrugated Steel Pipe (Type I or II)	ASTM A 760
Galvanized Steel Corrugated Structural Plates and Fasteners for Pipe, Pipe-Arches, and Arches	ASTM A 761
Polymer Precoated Corrugated Steel Pipe for Sewers and Drains	ASTM A 672
Post-Coated and Lined (Bituminous or Concrete) Corrugated Steel Sewer and Drainage Pipe	ASTM A 849
Vitrified Clay Pipe	ASTM C 700
Non-Reinforced Concrete Pipe	ASTM C 14
Reinforced Concrete Pipe	ASTM C 76
Reinforced Concrete D-Load Pipe	ASTM C 665
Reinforced Concrete Arch Pipe	ASTM C 506
Reinforced Concrete Elliptical Pipe	ASTM C 507
Precast Reinforced Concrete Box Sections	ASTM C 789 and C 850
Bituminous-Coated Corrugated Metal Pipe and Pipe Arches	AASHTO M 190
Corrugated Aluminum Alloy Culvert Pipe	AASHTO M 196
Bituminous-Coated Corrugated Aluminum Alloy Culvert Pipe	AASHTO M 190 and M 196
Bituminous-Coated Structural Plate Pipe, Pipe Arch, and Arches	AASHTO M 167 and M 243
Aluminum Alloy Structural Plate for Pipe, Pipe Arch, and Arches	AASHTO M 219
Polyvinyl Chloride (PVC) Pipe	ASTM D 3034
Corrugated Polyethylene Drainage Tubing	AASHTO M 252
Corrugated Polyethylene Pipe	AASHTO M 294

701-2.3 CONCRETE. Concrete for pipe cradles shall have a minimum compressive strength of 2000 psi (13 780 kPa) at 28 days and conform to the requirements of ASTM C 94.

701-2.4 RUBBER GASKETS. Rubber gaskets for rigid pipe shall conform to the requirements of ASTM C 443. Rubber gaskets for PVC pipe shall conform to the requirements of ASTM F 477. Rubber gaskets for zinc-coated steel pipe and precoated galvanized pipe shall conform to the requirements of ASTM D 1056, for the "RE" closed cell grades.

701-2.5 JOINT MORTAR. Pipe joint mortar shall consist of one part portland cement and two parts sand. The portland cement shall conform to the requirements of ASTM C 150, Type I. The sand shall conform to the requirements of ASTM C 144.

701-2.6 OAKUM. Oakum for joints in bell and spigot pipe shall be made from hemp (Cannabis Sativa) line, or Benares Sunn fiber, or from a combination of these fibers. The oakum shall be thoroughly corded and finished.

701-2.7 JOINT FILLERS. Poured filler for joints shall conform to the requirements of ASTM D 1190.

701-2.8 PLASTIC GASKETS. Plastic gaskets shall conform to the requirements of AASHTO M 198 (Type B).

701-2.9 COMPRESSION JOINTS. Materials for compression joints for vitrified clay pipe shall meet the requirements of ASTM C 425.

* *

ASTM C 789 and C 850 are primarily manufacturing specifications. The box section dimensions, compressive strength of the concrete, and reinforcement details shown in the specifications have been designed for a combined earth dead load and AASHTO H 520 live load condition. A modified design will be necessary when aircraft loadings are greater than the H520 loading.

* *

CONSTRUCTION METHODS

701-3.1 EXCAVATION. The width of the pipe trench shall be sufficient to permit satisfactory jointing of the pipe and thorough tamping of the bedding material under and around the pipe, but it shall not be less than the external diameter of the pipe plus 6 inches (150 mm) on each side. The trench walls shall be approximately vertical.

Where rock, hardpan, or other unyielding material is encountered, the Contractor shall remove it from below the foundation grade for a depth of at least 12 inches (300 mm) or one-half inch (12 mm) for each foot of fill over the top of the pipe (whichever is greater) but for no more than three-quarters of the nominal diameter of the pipe. The width of the excavation shall be at least 1 foot (30 cm) greater than the horizontal outside diameter of the pipe. The excavation below grade shall be backfilled with selected fine compressible material, such as silty clay or loam, and lightly compacted in layers not over 6 inches (150 mm) in uncompacted depth to form a uniform but yielding foundation.

Where a firm foundation is not encountered at the grade established, due to soft, spongy, or other unstable soil, the unstable soil shall be removed and replaced with approved granular material for the full trench width. The Engineer shall determine the depth of removal necessary. The granular material shall be compacted to provide adequate support for the pipe.

The excavation for pipes that are placed in embankment fill shall not be made until the embankment has been completed to a height above the top of the pipe as shown on the plans.

701-3.2 BEDDING. The pipe bedding shall conform to the class specified on the plans. When no bedding class is specified or detailed on the plans, the requirements for Class C bedding shall apply.

a. Rigid Pipe. Class A bedding shall consist of a continuous concrete cradle conforming to the plan details.

Class B bedding shall consist of a bed of granular material having a thickness of at least 6 inches (150 mm) below the bottom of the pipe and extending up around the pipe for a depth of not less than 30 percent of the pipe's vertical outside diameter. The layer of bedding material shall be shaped to fit the pipe for at least 10 percent of the pipe's vertical diameter and shall have recesses shaped to receive the bell of bell and spigot pipe. The bedding material shall be sand or selected sandy soil, all of which passes a 3/8 inch (9 mm) sieve and not more than 10 percent of which passes a No. 200 (0.075 mm) sieve.

Class C bedding shall consist of bedding the pipe in its natural foundation to a depth of not less than 10 percent of the pipe's vertical outside diameter. The bed shall be shaped to fit the pipe and shall have recesses shaped to receive the bell of bell and spigot pipe.

b. Flexible Pipe. For flexible pipe, the bed shall be roughly shaped to fit the pipe, and a bedding blanket of sand or fine granular material shall be provided as follows:

Pipe Corrugation Depth		Minimum Bedding Depth	
in.	mm	in.	mm
½	12.5	1	25.0
1	25.0	2	50.0
2	50.0	3	75.0
2½	62.5	3½	87.5

c. PVC and Polyethylene Pipe. For PVC and polyethylene pipe, the bedding material shall consist of coarse sands and gravels with a maximum particle size of 3/4-inch (13 mm). For pipes installed under paved areas, no more than 12 percent of the material shall pass the No. 200 (0.075 mm) sieve. For all other areas, no more than 50 percent of the material shall pass the No. 200 (0.075 mm) sieve. The bedding shall have a thickness of at least 6 inches (150 mm) below the bottom of the pipe and extend up around the pipe for a depth of not less than 50 percent of the pipe's vertical outside diameter.

701-3.3 LAYING PIPE. The pipe laying shall begin at the lowest point of the trench and proceed upgrade. The lower segment of the pipe shall be in contact with the bedding throughout its full length. Bell or groove ends of rigid pipes and outside circumferential laps of flexible pipes shall be placed facing upgrade.

Paved or partially lined pipe shall be placed so that the longitudinal center line of the paved segment coincides with the flow line.

Elliptical and elliptically reinforced pipes shall be placed with the manufacturer's top of pipe mark within five degrees of a vertical plane through the longitudinal axis of the pipe.

701-3.4 JOINING PIPE. Joints shall be made with (1) portland cement mortar, (2) portland cement grout, (3) rubber gaskets, (4) oakum and mortar, (5) oakum and joint compound, or (6) plastic gaskets.

Mortar joints shall be made with an excess of mortar to form a continuous bead around the outside of the pipe and shall be finished smooth on the inside. Molds or runners shall be used for grouted joints in order to retain the poured grout. Rubber ring gaskets shall be installed to form a flexible watertight seal. Where oakum is used, the joint shall be caulked with the oakum and then sealed with joint compound or mortar.

a. Concrete Pipe. Concrete pipe may be either bell and spigot or tongue and groove. The method of joining pipe sections shall be such that the ends are fully entered and the inner surfaces are reasonably flush and even. Joints shall be thoroughly wetted before mortar or grout is applied.

b. Metal Pipe. Metal pipe shall be firmly joined by form fitting bands conforming to the requirements of ASTM A 760 for steel pipe and AASHTO M 196 for aluminum pipe.

c. PVC and Polyethylene Pipe. Joints for PVC pipe shall conform to the requirements of ASTM D 3212. Fittings for polyethylene pipe shall conform to the requirements of AASHTO M 252.

d. Vitrified Clay Pipe. Fittings for vitrified clay pipe shall conform to the requirements of ASTM C 700. Materials for compression joints shall conform to the requirements of ASTM C 425.

701-3.5 BACKFILLING. Pipes shall be inspected before any backfill is placed; any pipes found to be out of alignment, unduly settled, or damaged shall be removed and relaid or replaced at the Contractor's expense.

Material for backfill shall be fine, readily compatible soil, or granular material selected from the excavation or a source of the Contractor's choosing. It shall not contain frozen lumps, stones that would be retained on a 2-inch (50.0 mm) sieve, chunks of highly plastic clay, or other objectionable material. No less than 95 percent of a granular backfill material shall pass through a 1/2 inch (12 mm) sieve, and no less than 95 percent of it shall be retained on a No. 4 (4.75 mm) sieve.

When the top of the pipe is even with or below the top of the trench, the backfill shall be compacted in layers not exceeding 6 inches (150 mm) on both sides of the pipe and shall be brought up one foot (30 cm) above the top of the pipe or to natural ground level, whichever is greater. Care shall be exercised to thoroughly compact the backfill material under the haunches of the pipe. Material shall be brought up evenly on both sides of the pipe.

When the top of the pipe is above the top of the trench, the backfill shall be compacted in layers not exceeding 6 inches (150 mm) and shall be brought up evenly on both sides of the pipe to 1 foot (30 cm) above the top of the pipe. The width of backfill on each side of the pipe for the portion above the top of the trench shall be equal to twice the pipe's diameter of 12 feet (3.5 m), whichever is less.

For PVC and polyethylene pipe, the backfill shall be placed in two stages; first to the top of the pipe and then at least 12 inches (300 mm) over the top of the pipe. The backfill material shall meet the requirements of paragraph 701-3.2c.

All backfill shall be compacted to the density required under Item P-152.

METHOD OF MEASUREMENT

701-4.1 The length of pipe shall be measured in linear feet (meters) of pipe in place, completed, and approved. It shall be measured along the centerline of the pipe from end or inside face of structure to the end or inside face of structure, whichever is applicable. The several classes, types and size shall be measured separately. All fittings shall be included in the footage as typical pipe sections in the pipe being measured.

701-4.2 The volume of concrete for pipe cradles to be paid for shall be the number of cubic yards (cubic meters) of concrete which is completed in place and accepted.

701-4.3 The volume of rock to be paid for shall be the number of cubic yards (cubic meters) of rock excavated. No payment shall be made for the cushion material placed for the bed of the pipe.

BASIS OF PAYMENT

701-5.1 Payment will be made at the contract unit price per linear foot (meter) for each kind of pipe of the type and size designated; at the contract unit price per cubic yard (cubic meter) of concrete for pipe cradles; and at the contract unit price per cubic yard (cubic meter) for rock excavation.

These prices shall fully compensate the Contractor for furnishing all materials and for all preparation, excavation, and installation of these materials; and for all labor, equipment, tools, and incidentals necessary to complete the item.

Payment will be made under:

Item 701-5.1	[ ] inch [ ] per linear foot (meter)
Item 701-5.2	Concrete for pipe cradles--per cubic yard (cubic meter)
Item 701-5.3	Rock excavation--per cubic yard (cubic meter)

* *

The Engineer shall specify the size and type of pipe for each pipe size specified in the plans.

* *

MATERIAL REQUIREMENTS

ASTM A 760	Corrugated Steel Pipe, Metallic-Coated for Sewers and Drains

ASTM A 761	Steel Galvanized, Corrugated Structural Plates and Fasteners for Pipe, Pipe-Arches, and Arches
ASTM A 762	Precoated (Polymeric) Galvanized Steel Sewer and Drainage Pipe
ASTM A 849	Post-Coated and Lined (Bituminous or Concrete) Corrugated Steel Sewer and Drainage Pipe
ASTM C 14	Concrete Sewer, Storm Drain, and Culvert Pipe
ASTM C 76	Reinforced Concrete Culvert, Storm Drain, and Sewer Pipe
ASTM C 94	Ready Mixed Concrete
ASTM C 144	Aggregate for Masonry Mortar
ASTM C 150	Portland Cement
ASTM C 425	Compression Joints for Vitrified Clay Pipe
ASTM C 443	Joints for Circular Concrete Sewer and Culvert Pipe, Using Rubber Gaskets
ASTM C 506	Reinforced Concrete Arch Culvert, Storm Drain, and Sewer Pipe
ASTM C 507	Reinforced Concrete Elliptical Culvert, Storm Drain and Sewer Pipe
ASTM C 655	Reinforced Concrete D-Load Culvert, Storm Drain and Sewer Pipe
ASTM C 700	Vitrified Clay Pipe, Extra Strength, Standard Strength, and Perforated
ASTM C 789	Precast Reinforced Concrete Box Sections for Culverts, Storm Drains, and Sewers
ASTM C 850	Precast Reinforced Concrete Box Sections for Culverts, Storm Drains, and Sewers with Less than 2 feet of Cover
ASTM D 1056	Flexible Cellular Materials--Sponge or Expanded Rubber
ASTM D 1190	Concrete Joint Sealer, Hot Poured Elastic Type
ASTM D 3034	Type PSMPoly (Vinyl Chloride) (PVC) Sewer Pipe and Fittings
ASTM D 3212	Joints for Drain and Sewer Plastic Pipes Using Flexible Elastomeric Seals
ASTM F 477	Elastomeric Seals (Gaskets) for Joining Plastic Pipe
AASHTO M 190	Bituminous-Coated Corrugated Metal Culvert Pipe and Pipe Arches
AASHTO M 196	Corrugated Aluminum Alloy Culverts and Underdrains
AASHTO M 198	Joints for Circular Concrete Sewer and Culvert Pipe Using Flexible Watertight Gaskets
AASHTO M 219	Aluminum Alloy Structural Plate for Pipe, Pipe-Arches, and Arches
AASHTO M 243	Field Applied Coating of Corrugated Metal Structural Plate for Pipe, Pipe-Arches, and Arches

AASHTO M 252	Corrugated Polyethylene Drainage Tubing
AASHTO M 294	Corrugated Polyethylene Pipe, 12- to 24-in. Diameter

ITEM D-705 PIPE UNDERDRAINS FOR AIRPORTS

DESCRIPTION

705-1.1 This item shall consist of the construction of pipe drains in accordance with these specifications and in reasonably close conformity with the lines and grades shown on the plans.

MATERIALS

705-2.1 GENERAL. The pipe shall be of the type called for on the plans or in the proposal and shall be in accordance with the following appropriate requirements.

Perforated Vitrified Clay Pipe	ASTM C 700
Perforated Concrete Pipe	ASTM C 444
Porous Concrete Pipe	ASTM C 654
Polymer Precoated Perforated Corrugated Steel Pipe	ASTM A 762
Perforated Corrugated Aluminum Alloy Pipe	AASHTO M 196
Perforated, Laminated Wall Bituminized Fiber Pipe	ASTM D 2418
Smooth-Wall Perforated PVC Pipe	ASTM F 758
Poly (Vinyl Chloride)(PVC) Corrugated Sewer Pipe With a Smooth Interior and Fittings	ASTM F 949
Perforated Corrugated Steel Pipe	ASTM A 760
Bituminous-Coated Perforated Corrugated Aluminum Alloy Pipe	AASHTO M 196 and M 190

705-2.3 JOINT MORTAR. Pipe joint mortar shall consist of one part portland cement and two parts sand. The portland cement shall conform to the requirements of ASTM C 150, Type I. The sand shall conform to the requirements of ASTM C 144.

705-2.4 ELASTOMERIC SEALS. Elastomeric seals shall conform to the requirements of ASTM F 477.

705-2.5 POROUS BACKFILL. Porous backfill shall be free of clay, humus, or other objectionable matter, and shall conform to the gradation in Table 1 when tested in accordance with ASTM C 136.

TABLE 1. GRADATION OF POROUS BACKFILL

Sieve Designation (square openings)	Percentage by Weight Passing Sieves	
	Porous Material No. 1	Porous Material No. 2
1½ inch		100
1 inch (225.0 mm)		90—100
⅜ inch (9.5 mm)	100	25—60
No. 4 (4.75 mm)	95—100	5—40
No. 8 (2.36 mm)		0—20
No. 16 (1.18 mm)	45—80	
No. 50 (0.30 mm)	10—30	
No. 100 (0.15 mm)	0—10	

When two courses of porous backfill are specified in the plans, the finer of the materials shall conform to particle size tabulated herein for porous material No. 1. The coarser granular material shall meet the gradation given in the tabulation for porous material No. 2.

CONSTRUCTION METHODS

705-3.1 EQUIPMENT. All equipment necessary and required for the proper construction of pipe underdrains shall be on the project, in first-class working condition, and approved by the Engineer before construction is permitted to start.

705-3.2 EXCAVATION. The width of the pipe trench shall be sufficient to permit satisfactory jointing of the pipe and thorough tamping of the bedding material under and around the pipe, but shall not be less than the external diameter of the pipe plus 6 inches (150 mm) on each side. The trench walls shall be approximately vertical.

Where rock, hardpan, or other unyielding material is encountered, it shall be removed below the foundation grade for a depth of at least 4 inches (100 mm). The excavation below grade shall be backfilled with selected fine compressible material, such as silty clay or loam, and lightly compacted in layers not over 6 inches (150 mm) in uncompacted depth to form a uniform but yielding foundation.

Where a firm foundation is not encountered at the grade established, due to soft, spongy, or other unstable soil, the unstable soil shall be removed and replaced with approved granular material for the full trench width. The engineer shall determined the depth of removal necessary. The granular material shall be compacted to provide adequate support for the pipe.

Excavated material not required or acceptable for backfill shall be disposed of by the Contractor as directed by the Engineer. The excavation shall not be carried below the required depth; when this is done, the trench shall be backfilled at the Contractor's expense with material approved by the Engineer and compacted to the density of the surrounding earth material.

The bed for the pipe shall be so shaped that at least the lower quarter of the pipe shall be in continuous contact with the bottom of the trench. Spaces for the pipe bell shall be excavated accurately to size to clear the bell so that the barrel supports the entire weight of the pipe.

The Contractor shall do such trench bracing, sheathing, or shoring necessary to perform and protect the excavation as required for safety and conformance to governing laws. Unless otherwise provided, the bracing, sheathing, or shoring shall be removed by the Contractor after the completion of the backfill to at least 12 inches (300 mm) over the top of the pipe. The sheathing or shoring shall be pulled as the granular backfill is placed and compacted to avoid any unfilled spaces between the trench wall and the backfill material. The cost of bracing, sheathing, or shoring, and the removal of same, shall be included in the unit price bid per foot (meter) for the pipe.

705-3.3 LAYING AND INSTALLING PIPE.

a. Clay or Concrete Pipe. The laying of the pipe in the finished trench shall be started at the lowest point and laid upgrade. When bell and spigot pipe is used, the bells shall be laid upgrade. If tongue and groove pipe is used, the groove end shall be laid upgrade. Holes in perforated pipe shall be placed down, unless otherwise shown on the plans. The pipe shall be firmly and accurately set to line and grade so that the invert will be smooth and uniform. Pipe shall not be laid on frozen ground.

Pipe which is not true in alignment, or which shows any settlement after laying, shall be taken up and relaid without extra compensation.

b. Metal and Fiber Pipe. The metal pipe shall be laid with the separate sections joined firmly together with bands, with outside laps of circumferential joints pointing upgrade, and with longitudinal laps on the sides. Any metal in the pipe or bands which is not protected thoroughly by galvanizing shall be coated with a suitable asphaltum paint.

The sections of bituminized-fiber pipe shall be securely fastened together with suitable fittings. When the fiber couplings are tapered, they shall provide a tight, driven fit.

During installation, the asphalt-protected pipe shall be handled without damaging the asphalt coating. Any breaks in the bitumen or treatment of the pipe shall be refilled with the type and kind of bitumen used in coating the pipe originally.

c. **PVC Pipe.** PVC pipe shall be installed in accordance with the requirements of ASTM D 2321.

d. **All Types of Pipe.** The upgrade end of pipelines, not terminating in a structure, shall be plugged or capped as approved by the Engineer.

Unless otherwise shown on the plans, a 4-inch (100 mm) bed of granular backfill material shall be spread in the bottom of the trench throughout the entire length under all perforated pipe underdrains.

Pipe outlets for the underdrains shall be constructed when required or shown on the plans. The pipe shall be laid with tight-fitting joints. Porous backfill is not required around or over pipe outlets for underdrains. All connections to other drainage pipes or structures shall be made as required and in a satisfactory manner. If connections are not made to other pipes or structures, the outlets shall be protected and constructed as shown on the plans.

705-3.4 MORTAR. The mortar shall be of the desired consistency for caulking and filling the joints of the pipe and for making connections to other pipes or to structures. Mortar that is not used within 45 minutes after water has been added shall be discarded. Retempering of mortar shall not be permitted.

705-3.5 JOINTS IN CLAY OR CONCRETE PIPE. When open or partly open joints are required or specified, they shall be constructed as indicated on the plans. The pipe shall be laid with the ends fitted together as designed. If bell and spigot pipe is used, hemp, oakum, or mortar shall be placed along the inside bottom quarter of the bell to center the following section of pipe.

The open or partly open joints shall be surrounded with granular material meeting requirements of porous backfill No. 2 or as indicated on the plans. This backfill shall be placed so its thickness will be not less than 3 inches (75 mm) nor more than 6 inches (150 mm), unless otherwise shown on the plans.

When the original material excavated from the trench is impervious, commercial concrete sand or granular material meeting requirements of porous backfill No. 1 shall surround porous backfill No. 2, as shown on the plans or as directed by the Engineer.

When the original material excavated from the trench is previous and suitable, it may be used as backfill in lieu of porous backfill No. 1, when indicated on the plans or as directed by the Engineer.

705-3.6 BACKFILLING.

a. **Earth.** All trenches and excavations shall be backfilled within a reasonable time after the pipes are installed, unless other protection of the pipe is directed. The backfill material shall be selected material from excavation or borrow; material which is placed within a nominal pipe diameter distance at the sides of the pipe and 1 foot (30 cm) over the top shall be material which can be readily compacted. It shall not contain stones retained on a 3-inch (75 mm) sieve, frozen lumps, chunks of highly plastic clay, or any other material which is objectionable to the Engineer. The material shall be moistened or dried, if necessary to be compacted by the method in use. Backfill material shall be approved by the Engineer. Special care shall be taken in placing the backfill. Great care shall be used to obtain thorough compaction under the haunches and along the sides to the top of the pipe.

The backfill shall be placed in loose layers not exceeding 6 inches (150 mm) in depth under and around the pipe, and not exceeding 8 inches (200 mm) over the pipe. Successive layers shall be added and thoroughly compacted by hand and pneumatic tampers, approved by the Engineer, until the trench is completely filled and brought to the proper elevation. Backfilling shall be done in a manner to avoid injurious top or side pressures on the pipe.

In embankments and for other areas outside of pavements, the backfill shall be compacted to the density required for embankments in unpaved areas under Item P-152. Under paved areas, the subgrade and any backfill shall be compacted to the density required for embankments for paved areas under Item P-152.

b. **Granular Material.** When granular backfill is required, its placement in the trench and about the pipe shall be as shown on the plans. Special care shall be taken in placing the backfill. The granular backfill shall not contain a damaging amount of foreign matter, nor shall earth from the sides of the trench or from the windrow be allowed to filter into the backfill. When required by the Engineer, a template shall be used to properly place and keep separate the two sizes of backfill. The backfill shall be placed in loose layers not exceeding 6 inches (150 mm) in depth and compacted by hand and pneumatic tampers to the requirements as

given for earth backfill. Backfilling shall be done in a manner to avoid injurious top or side pressure on the pipe. The granular backfill shall be made to the elevation of the trench, as shown on the plans.

When perforated pipe is specified, granular backfill material shall be placed along the full length of the pipe. The position of the granular material shall be as shown on the plans. If the original material excavated from the trench is pervious and suitable, it shall be used in lieu of porous backfill No. 1.

When porous backfill is to be placed in paved or adjacent areas prior to the completion of grading or subgrade operations, the backfill material shall be placed immediately after laying the pipe. The depth of this granular backfill shall be not less than 12 inches (300 mm), measured from the top of the underdrain. During subsequent construction operations, this minimum backfill of 12 inches (300 mm) of depth shall not be disturbed until such time as the underdrains are to be completed. When the underdrains are to be completed, the unsuitable material shall be removed until the porous backfill is exposed. That part of the porous backfill which contains objectionable material shall be removed and replaced with suitable material. The cost of removing and replacing any such unsuitable material shall be borne by the Contractor.

Whenever a granular subbase blanket course is to be used under pavements which extends several feet beyond the edge of paving to the outside edge of the underdrain trench, the granular backfill material over the underdrains shall be placed in the trench up to an elevation of 2 inches (50 mm) above the bottom surface of the granular subbase blanket course. Immediately prior to the placing of the granular subbase blanket course, the Contractor shall blade this excess trench backfill from the top of the trench onto the adjacent subgrade where it can be incorporated into the granular subbase blanket course. Any unsuitable material which remains over the underdrain trench shall be removed and replaced. The subbase material shall be placed to provide clean contact between the subbase material and the underdrain granular backfill material for the full width of the underdrain trench.

705-3.7 CONNECTIONS. When the plans call for connections to existing or proposed pipe or structures, these connections shall be watertight and made so that a smooth uniform flow line will be obtained throughout the drainage system.

705-3.8 CLEANING AND RESTORATION OF SITE. After the backfill is completed, the Contractor shall dispose of all surplus material, dirt, and rubbish from the site. Surplus dirt may be deposited in embankments, shoulders, or as ordered by the Engineer. Except for paved areas of the airport, the Contractor shall restore all disturbed areas to their original condition.

METHOD OF MEASUREMENT

705-4.1 The length of pipe to be paid for shall be the number of linear feet (meters) of pipe underdrains in place, completed, and approved; measured along the centerline of the pipe from end or inside face of structure to the end or inside face of structure, whichever is applicable. The several classes, types, and sizes shall be measured separately. All fittings shall be included in the footage as typical pipe sections in the pipeline being measured.

705-4.2 The quantity of porous backfill to be paid for shall be the number of cubic yards (cubic meters) of porous backfill No. 1 and No. 2, complete in place and accepted, and shall be determined from the dimensions given on the plans by typical trench sections indicating the placement of porous backfill or dimensions ordered by the Engineer.

BASIS OF PAYMENT

705-5.1 Payment will be made at the contract unit price per linear foot (meter) for pipe underdrains of the type, class, and size designated; at the contract unit price per cubic yard (cubic meter) for porous backfill No.1; and at the contract unit price per cubic yard (cubic meter) for porous backfill No. 2. These prices shall be full compensation for furnishing all materials and for all preparation, excavation, and installation of these materials, and for all labor, equipment, tools, and incidentals necessary to complete the item.

Payment will be made under:

Item D-705-5.1	[ ] inch [ ]per linear foot (meter)
Item D-705-5.2	Porous Backfill No. 1--per cubic yard (cubic meter)
Item D-705-5.3	Porous Backfill No. 2--per cubic yard (cubic meter)

* *

The Engineer shall specify the size and type of pipe for each pipe size specified in the plans.

* *

MATERIAL REQUIREMENTS

ASTM A 760	Corrugated Steel Pipe, Metallic-Coated for Sewers and Drains
ASTM A 762	Corrugated Steel Pipe, Polymer Precoated for Sewers and Drains
ASTM C 136	Sieve or Screen Analysis of Fine and Coarse Aggregates
ASTM C 144	Aggregate for Masonry Mortar
ASTM C 150	Portland Cement
ASTM C 444	Perforated Concrete Pipe
ASTM C 654	Porous Concrete Pipe
ASTM C 700	Vitrified Clay Pipe, Extra Strength, Standard Strength, and Perforated
ASTM D 2321	Underground Installation of Flexible Thermoplastic Sewer Pipe
ASTM D 2418	Perforated, Laminated-Wall Bituminized Fiber Pipe for Airport and Highway Drainage
ASTM D 3034	Type PSMPoly(Vinyl Chloride) (PVC) Sewer Pipe and Fittings
ASTM F 477	Elastomeric Seals (Gaskets) for Joining Plastic Pipe
ASTM F 758	Smooth-Wall Poly(Vinyl Chloride) (PVC) Plastic Underdrain Systems for Highway, Airport, and Similar Drainage
ASTM F 949	Poly (Vinyl Chloride)(PVC) Corrugated Sewer Pipe with a Smooth Interior and Fittings
AASHTO M 190	Bituminous Coated Corrugated Metal Culvert Pipe and Pipe Arches
AASHTO M 196	Corrugated Aluminum Alloy Culverts and Underdrains

ITEM D-751 MANHOLES, CATCH BASINS, INLETS AND INSPECTION HOLES

DESCRIPTION

751-1.1 This item shall consist of construction of manholes, catch basins, inlets, and inspection holes, in accordance with these specifications, at the specified locations and conforming to the lines, grades, and dimensions shown on the plans or required by the Engineer.

MATERIALS

751-2.1 BRICK. The brick shall conform to the requirements of ASTM C 32, Grade SM.

751-2.2 MORTAR. Mortar shall consist of one part portland cement and two parts sand. The portland cement shall conform to the requirements of ASTM C 150, Type I. The sand shall conform to the requirements of ASTM C 144.

751-2.3 CONCRETE. Plain and reinforced concrete used in structures, connections of pipes with structures, and the support of structures or frames shall conform to the requirements of Item P-610.

751-2.4 PRECAST CONCRETE PIPE MANHOLE RINGS. Precast concrete pipe manhole rings shall conform to the requirements of ASTM C 478. Unless otherwise specified, the risers and offset cone sections shall have an inside diameter of not less than 36 inches (90 cm) nor more than 48 inches (120 cm).

751-2.5 CORRUGATED METAL. Corrugated metal shall conform to the requirements of AASHTO M 36.

751-2.6 FRAMES, COVERS, AND GRATES. The castings shall conform to one of the following requirements:

a. Gray iron castings shall meet the requirements of ASTM A 48.

b. Malleable iron castings shall meet the requirements of ASTM A 47.

c. Steel castings shall meet the requirements of ASTM A 27.

d. Structural steel for grates and frames shall conform to the requirements of ASTM A 283, Grade D.

All castings or structural steel units shall conform to the dimensions shown on the plans and shall be designed to support the loadings specified.

Each frame and cover or grate unit shall be provided with fastening members to prevent it from being dislodged by traffic but which will allow easy removal for access to the structure.

All castings shall be thoroughly cleaned and given two coats of approved bituminous paint. After fabrication, structural steel units shall be galvanized to meet the requirements of ASTM A 123.

751-2.7 STEPS. The steps or ladder bars shall be gray or malleable cast iron or galvanized steel. The steps shall be the size, length, and shape shown on the plans and those steps that are not galvanized shall be given a coat of bituminous paint, when directed.

CONSTRUCTION METHODS

751-3.1 UNCLASSIFIED EXCAVATION.

a. The Contractor shall do all excavation for structures and structure footings to the lines and grades or elevations, shown on the plans, or as staked by the Engineer. The excavation shall be of sufficient size to permit the placing of the full width and length of the structure or structure footings shown. The elevations of the bottoms of footings, as shown on the plans, shall be considered as approximately only; and the

Engineer may order, in writing, changes in dimensions or elevations of footings necessary to secure a satisfactory foundation.

b. Boulders, logs, or any other objectionable material encountered in excavation shall be removed. All rock or other hard foundation material shall be cleaned of all loose material and cut to a firm surface either level, stepped, or serrated, as directed by the Engineer. All seams or crevices shall be cleaned out and grouted. All loose and disintegrated rock and thin strata shall be removed. When concrete is to rest on a surface other than rock, special care shall be taken not to disturb the bottom of the excavation, and excavation to final grade shall not be made until just before the concrete or reinforcing is to be placed.

c. The Contractor shall do all bracing, sheathing, or shoring necessary to implement and protect the excavation and the structure as required for safety or conformance to governing laws. The cost of bracing, sheathing, or shoring shall be included in the unit price bid for the structure.

d. Unless otherwise provided, bracing, sheathing, or shoring involved in the construction of this item shall be removed by the Contractor after the completion of the structure. Removal shall be effected in a manner which will not disturb or mar finished masonry. The cost of removal shall be included in the unit price bid for the structure.

e. After each excavation is completed, the Contractor shall notify the Engineer to that effect; and concrete or reinforcing steel shall be placed after the Engineer has approved the depth of the excavation and the character of the foundation material.

751-3.2 BRICK STRUCTURES.

a. Foundations. A prepared foundation shall be placed for all brick structures after the foundation excavation is completed and accepted. Unless otherwise specified, the base shall consist of reinforced concrete mixed, prepared, and placed in accordance with the requirements of Item P-610.

b. Laying Brick. All brick shall be clean and thoroughly wet before laying so that they will not absorb any appreciable amount of additional water at the time they are laid. All brick shall be laid in freshly made mortar. Mortar that is not used within 45 minutes after water has been added shall be discarded. Retempering of mortar shall not be permitted. An ample layer of mortar shall be spread on the beds and a shallow furrow shall be made in it which can be readily closed by the laying of the brick. All bed and head joints shall be filled solid with mortar. End joints of stretchers and side or cross joints of headers shall be fully buttered with mortar and a shoved joint made to squeeze out mortar at the top of the joint. Any bricks that may be loosened after the mortar has taken its set, shall be removed, cleaned, and relaid with fresh mortar. No broken or chipped brick shall be used in the face, and no spalls or bats shall be used except where necessary to shape around irregular openings or edges; in which case, full bricks shall be placed at ends or corners where possible, and the bats shall be used in the interior of the course. In making closures, no piece of brick shorter than the width of a whole brick shall be used; and wherever practicable, whole brick shall be used and laid as headers.

c. Joints. All joints shall be slushed with mortar at every course, but slushing alone will not be considered adequate for making an acceptable joint. Exterior faces shall be laid up in advance of backing. Exterior faces shall be back plastered or pargeted with a coat of mortar not less than 3/8-inch (9 mm) thick before the backing is laid up. Prior to pargeting, all joints on the back of face courses shall be cut flush. Unless otherwise noted, joints shall be not less than 1/4-inch (6 mm) nor more than 1/2-inch (12 mm) wide and whatever width is adopted shall be maintained uniform throughout the work.

d. Pointing. Face joints shall be neatly struck, using the weather joint. All joints shall be finished properly as the laying of the brick progresses. When nails or line pins are used the holes shall be immediately plugged with mortar and pointed when the nail or pin is removed.

e. Cleaning. Upon completion of the work all exterior surfaces shall be thoroughly cleaned by scrubbing and washing down with water and, if necessary to produce satisfactory results, cleaning shall be done with a 5% solution of muriatic acid which shall then be rinsed off with liberal quantities of clean fresh water.

f. Curing and Cold Weather Protection. In hot or dry weather, or when directed by the Engineer, the brick masonry shall be protected and kept moist for at least 48 hours after laying the brick. Brick masonry

work or pointing shall not be done when there is frost in the brick or when the air temperature is below 50° F (10° C) unless the Contractor has on the project ready to use, suitable covering and artificial heating devices necessary to keep the atmosphere surrounding the masonry at a temperature of not less than 60° F (15° C) for the duration of the curing period.

751-3.3 CONCRETE STRUCTURES. Concrete structures shall be built on prepared foundations, conforming to the dimensions and form indicated on the plans. The construction shall conform to the requirements specified in Item P-610. Any reinforcement required shall be placed as indicated on the plans and shall be approved by the Engineer before the concrete is poured.

All invert channels shall be constructed and shaped accurately so as to be smooth, uniform, and cause minimum resistance to flowing water. The interior bottom shall be sloped downward toward the outlet.

751-3.4 PRECAST CONCRETE PIPE STRUCTURES. Precast concrete pipe structures shall be constructed on prepared or previously placed slab foundations and shall conform to the dimensions and locations shown on the plans. All precast concrete pipe sections necessary to build a completed structure shall be furnished. The different sections shall fit together readily, and all jointing and connections shall be cemented with mortar. The top of the upper precast concrete pipe member shall be suitably formed and dimensioned to receive the metal frame and cover or grate, or other cap, as required. Provision shall be made for any connections for lateral pipe, including drops and leads that may be installed in the structure. The flow lines shall be smooth, uniform, and cause minimum resistance to flow. The metal steps which are embedded or built into the side walls shall be aligned and placed at vertical intervals of 12 inches (300 mm). When a metal ladder replaces the steps, it shall be securely fastened into position.

751-3.5 CORRUGATED METAL STRUCTURES. Corrugated metal structures shall be constructed on prepared foundations, conforming to the dimensions and locations as shown on the plans. The structures shall be prefabricated. standard or special fittings shall be furnished to provide pipe connections or branches of correct dimensions. The connections or branches shall be of sufficient length to accommodate connecting bands. The fittings shall be welded in place to the metal structures. When indicated, the structures shall be placed on a reinforced concrete base. The top of the metal structure shall be designed so that either a concrete slab or metal collar may be attached to which can be fastened a standard metal frame and grate or cover. Steps or ladders shall be furnished as shown on the plans.

751-3.6 INLET AND OUTLET PIPES. Inlet and outlet pipes shall extend through the walls of the structures for a sufficient distance beyond the outside surface to allow for connections but shall be cut off flush with the wall on the inside surface, unless otherwise directed. For concrete or brick structures, the mortar shall be placed around these pipes so as to form a tight, neat connection.

751-3.7 PLACEMENT AND TREATMENT OF CASTINGS, FRAMES, AND FITTINGS. All castings, frames, and fittings shall be placed in the positions indicated on the plans or as directed by the Engineer, and shall be set true to line and to correct elevation. If frames or fittings are to be set in concrete or cement mortar, all anchors or bolts shall be in place and position before the concrete or mortar is placed. The unit shall not be disturbed until the mortar or concrete has set.

When frames or fittings are to be placed upon previously constructed masonry, the bearing surface or masonry shall be brought true to line and grade and shall present an even bearing surface in order that the entire face or back of the unit will come in contact with the masonry. The unit shall be set in mortar beds and anchored to the masonry as indicated on the plans or as directed and approved by the Engineer. All units shall set firm and secure.

After the frames or fittings have been set in final position and the concrete or mortar has been allowed to harden for 7 days, then the grates or covers shall be placed and fastened down.

751-3.8 INSTALLATION OF STEPS. The steps shall be installed as indicated on the plans or as directed by the Engineer. When the steps are to be set in concrete, they shall be placed and secured in position before the concrete is poured. When the steps are installed in brick masonry, they shall be placed as the masonry is being built. The steps shall not be disturbed or used until the concrete or mortar has hardened for at least 7 days. After this period has elapsed, the steps shall be cleaned and painted, unless they have been galvanized.

When steps are required with precast concrete pipe structures, they shall be cast into the sides of the pipe at the time the pipe sections are manufactured or set in place after the structure is erected by drilling holes in the concrete and cementing the steps in place.

When steps are required with corrugated metal structures, they shall be welded into aligned position at a vertical spacing of 12 inches (300 mm).

In lieu of steps, prefabricated ladders may be installed. In the case of brick or concrete structures, the ladder shall be held in place by grouting the supports in drilled holes. In the case of metal structures, the ladder shall be secured by welding the top support and grouting the bottom support into drilled holes in the foundation or as directed.

751-3.9 BACKFILLING.

a. After a structure has been completed, the area around it shall be filled with approved material, in horizontal layers not to exceed 8 inches (200 mm) in loose depth, and compacted to the density required in Item P-152. Each layer shall be deposited all around the structure to approximately the same elevation. The top of the fill shall meet the elevation shown on the plans or as directed by the Engineer.

b. Backfilling shall not be placed against any structure until permission is given by the Engineer. In the case of concrete, such permission shall not be given until the concrete has been in place 7 days, or until tests made by the laboratory under supervision of the Engineer establish that the concrete has attained sufficient strength to provide a factor of safety against damage or strain in withstanding any pressure created by the backfill or the methods used in placing it.

c. Backfill shall not be measured for direct payment. Performance of this work shall be considered as a subsidiary obligation of the Contractor covered under the contract unit price for the structure involved.

751-3.10 CLEANING AND RESTORATION OF SITE. After the backfill is completed, the Contractor shall dispose of all surplus material, dirt, and rubbish from the site. Surplus dirt may be deposited in embankments, shoulders, or as ordered by the Engineer. The Contractor shall restore all disturbed areas to their original condition.

After all work is completed, the Contractor shall remove all tools and equipment, leaving the entire site free, clear, and in good condition.

METHOD OF MEASUREMENT

751-4.1 Manholes, catch basins, inlets, and inspection holes shall be measured by the unit.

BASIS OF PAYMENT

751-5.1 The accepted quantities of manholes, catch basins, inlets, and inspection holes will be paid for at the contract unit price per each, complete and in place. This price shall be full compensation for furnishing all materials and for all preparation, excavation, backfilling and placing of the materials; furnishing and installation of such specials and connections to pipes and other structures as may be required to complete the item as shown on the plans; and for all labor equipment, tools and incidentals necessary to complete the structure.

Payment will be made under:

Item D-751-5.1	Manholes--per each
Item D-751-5.2	Catch Basins--per each
Item D-751-5.3	Inlets--per each
Item D-751-5.4	Inspection Holes--per each

MATERIAL REQUIREMENT

ASTM A 27	Mild to Medium-Strength Carbon-Steel Castings for General Application
ASTM A 47	Malleable Iron Castings
ASTM A 123	Zinc (Hot-Galvanized) Coatings on Products Fabricated from Rolled, Pressed, and Forged Steel Shapes, Plates, Bars and Strip
ASTM A 283	Low and Intermediate Tensile Strength Carbon Steel Plates, Shapes, and Bars
ASTM C 32	Sewer and Manhole Brick
ASTM C 144	Aggregate for Masonry Mortar
ASTM C 150	Portland Cement
AASHTO M 36	Zinc Coated (Galvanized) Corrugated Iron or Steel Culverts and Underdrains

ITEM D-752 CONCRETE CULVERTS, HEADWALLS, AND MISCELLANEOUS DRAINAGE STRUCTURES

DESCRIPTION

752-1.1 This item shall consist of **[plain][reinforced]** concrete culverts, headwalls, and miscellaneous drainage structures constructed in accordance with these specifications, at the specified locations and conforming to the lines, grades, and dimensions shown on the plans or required by the Engineer.

MATERIALS

752-2.1 CONCRETE. **[Plain][reinforced]** concrete shall meet the requirements of Item P-610.

CONSTRUCTION METHODS

752-3.1 UNCLASSIFIED EXCAVATION.

a. Trenches and foundation pits for structures or structure footings shall be excavated to the lines and grades or elevations shown on the plans. The excavation shall be of sufficient size to permit the placing of the full width and length of the structure or structure footings shown. The elevations of the bottoms of footings, as shown on the plans, shall be considered as approximate only; and the Engineer may order, in writing, changes in dimensions or elevations of footings necessary to secure a satisfactory foundation.

b. Boulders, logs, or any other objectionable material encountered in excavation shall be removed. All rock or other hard foundation material shall be cleaned of all loose material and cut to a firm surface either level, stepped, or serrated, as directed by the Engineer. All seams or crevices shall be cleaned out and grouted. All loose and disintegrated rock and thin strata shall be removed. When concrete is to rest on a surface other than rock, special care shall be taken not to disturb the bottom of the excavation, and excavation to final grade shall not be made until just before the concrete or reinforcing steel is to be placed.

c. The Contractor shall do all bracing, sheathing, or shoring necessary to perform and protect the excavation and the structure as required for safety or conformance to governing laws. The cost of bracing, sheathing, or shoring shall be included in the unit price bid for excavation.

d. Unless otherwise provided, bracing, sheathing, or shoring involved therewith shall be removed by the Contractor after the completion of the structure. Removal shall be effected in a manner which will not disturb or mar finished concrete. The cost of removal shall be included in the unit price bid for excavation.

e. After each excavation is completed, the Contractor shall notify the Engineer to that effect, and concrete or reinforcing steel shall be placed after the Engineer has approved the depth of the excavation and the character of the foundation material.

752-3.2 BACKFILLING.

a. After a structure has been completed, backfilling with approved material shall be accomplished by applying the fill in horizontal layers not to exceed 8 inches (200 mm) in loose depth, and compated. The field density of the compacted material shall be at least 90 percent of the maximum density for cohesive soils and 95 percent of the maximum density for noncohesive soils. The maximum density shall be determined in accordance with ASTM D 698. The field density shall be determined in accordance with ASTM D 1556 or ASTM D 2167.

b. No backfilling shall be placed against any structure until permission is given by the Engineer. In the case of concrete, such permission shall not be given until the concrete has been in place 7 days, or until tests made by the laboratory under the supervision of the Engineer establish that the concrete has attained sufficient strength to provide a factor of safety against damage or strain in withstanding any pressure created by the backfill or the methods used in placing it.

c. Fill placed around concrete culverts shall be deposited on both sides at the same time and to approximately the same elevation. Care shall be taken to prevent any wedging action against the structure, and all slopes bounding or within the areas to be backfilled shall be stepped or serrated to prevent wedge action.

d. Backfill will not be measured for direct payment. Performance of this work under the contract is not payable directly but shall be considered as a subsidiary obligation of the Contractor, covered under the contract unit price for "unclassified excavation for structures."

752-3.3 WEEP HOLES. Weep holes shall be constructed as shown on the plans.

752-3.4 CLEANING AND RESTORATION OF SITE. After the backfill is completed, the Contractor shall dispose of all surplus material, dirt, and rubbish from the site. Surplus dirt may be deposited in embankment, shoulders, or as ordered by the Engineer. The Contractor shall restore all disturbed areas to their original condition.

After all work is completed, the Contractor shall remove all tools and equipment, leaving the entire site free, clear, and in good condition.

METHOD OF MEASUREMENT

752-4.1 The quantity of unclassified excavation for structures to be paid for shall be the number of cubic yards (cubic meters), measured in original position, of material excavated in accordance with the plans, or as directed by the Engineer; but in no case shall any yardage be included in the measurement for payment which is outside of a volume bounded by vertical planes 18 inches (45 cm) outside of and parallel to the neat lines of the footings.

752-4.2 Concrete shall be measured by the number of cubic yards (cubic meters) of concrete, complete in place and accepted. In computing the yardage of concrete for payment, the dimensions used shall be those shown on the plans or ordered by the Engineer. No measurements or other allowances shall be made for forms, false work, cofferdams, pumping, bracing, expansion joints, or finishing of the concrete. No deductions in yardage shall be made for the volumes of reinforcing steel or embedded items.

752-4.3 The quantity of reinforcing steel to be paid for shall be the calculated theoretical number of pounds (kilograms)placed as shown on the plans, complete in place and accepted. The unit weight used for deformed bars shall be the weight of plain square or round bars, as the case may be, of equal nominal size.

BASIS OF PAYMENT

752-5.1 Payment will be made at the contract unit price per cubic yard (cubic meter) for unclassified excavation for structures; at the contract unit price per cubic yard (cubic meter) for concrete for the structures; and at the contract unit price per pound (kilogram) for reinforcing steel. These prices shall be full compensation for furnishing all materials and for all preparation, excavation, and placing the materials, and for all labor, equipment, tools, and incidentals necessary to complete the structure.

Payment will be made under:

Item D-752-5.1	Unclassified Excavation for Structures—per cubic yard (cubic meter)
Item D-752-5.2	Structural Concrete—per cubic yard (cubic meter)
Item D-752-5.3	Reinforcing Steel—per pound (kilogram)

TESTING REQUIREMENTS

ASTM D 698	Moisture-Density Relations of Soils and Soil-Aggregate Mixtures Using 5.5 lb (2.49 kg) Rammer and 12-in (305 mm) Drop
ASTM D 1556	Density of Soil in Place by the Sand-Cone Method
ASTM D 2167	Density of Soil in Place by the Rubber-Ballon Method

ITEM D-754 CONCRETE GUTTERS, DITCHES, AND FLUMES

DESCRIPTION

754-1.1 This item shall consist of portland cement concrete gutters, ditches, and flumes constructed in accordance with these specifications at the specified locations in accordance with the dimensions, lines, and grades as shown on the plans.

MATERIALS

754-2.1 Concrete. plain and reinforced concrete shall meet the requirements of Item P-610.

754-2.2 JOINTS. Joint filler materials and premolded joint material shall conform to Item P-610.

CONSTRUCTION METHODS

754-3.1 PREPARING SUBGRADE. Excavation shall be made to the required width and depth, and the subgrade upon which the item is to be built shall be compacted to a firm uniform grade. All soft and unsuitable material shall be removed and replaced with suitable approved material. When required, a layer of approved granular material, compacted to the thickness indicated on the plans, shall be placed to form a subbase. The underlying course shall be checked and accepted by the Engineer before placing and spreading operations are started.

754-3.2 PLACING. The forms for and the mixing, placing, finishing, and curing of concrete shall conform to the requirements of Item P-610 and shall be in accordance with the following requirements.

The concrete shall be tamped and spaded until it is consolidated and mortar entirely covers and forms the top surface. The surface of the concrete shall be floated smooth and the edges rounded to the radii shown on the plans. Before the concrete is given the final finishing, the surface shall be tested with a 10-foot (3 m) straightedge, and any irregularities of more than 1/4 inch (6 mm) in 10 feet (3 m) shall be eliminated.

The concrete shall be placed with dummy-grooved joints not to exceed 25 feet (7.5 m) apart, except where shorter lengths are necessary for closures, but no section shall be less than 4 feet (120 cm) long.

Expansion joints of the type called for in the plans shall be constructed to replace a dummy groove at spacings of approximately 100 feet (30 m). When the gutter is placed next to concrete pavement, expansion joints in the gutter shall be located opposite expansion joints in the pavement. When a gutter abuts a pavement or other structure, an expansion joint shall be placed between the gutter and the other structure.

Forms shall not be removed within 24 hours after the concrete has been placed. Minor defects shall be repaired with mortar containing 1 part cement and 2 parts fine aggregate.

The operations of depositing, compacting, and finishing the item shall be conducted so as to build a satisfactory structure. If any section of concrete is found to be porous, other than minor defects which may be plastered, or is otherwise defective, it shall be removed and replaced by the Contractor without additional compensation.

754.3 BACKFILLING. After the concrete has set sufficiently, the spaces adjacent to the structure shall be refilled to the required elevation with material specified on the plans and compacted by mechanical equipment to at least 90% of the maximum density as determined by ASTM D 698. The in-place density shall be determined in accordance with ASTM D 1556 or ASTM D 2167.

754-3.4 CLEANING AND RESTORATION OF SITE. After the backfill is completed, the Contractor shall dispose of all surplus material, dirt, and rubbish from the site. Surplus dirt may be deposited in embankments, shoulders, or as ordered by the Engineer. The Contractor shall restore all disturbed areas to their original condition.

After all work is completed, the Contractor shall remove all tools and equipment, leaving the entire site free, clear and in good condition.

Performance of the work described in this section is not payable directly but shall be considered as a subsidiary obligation of the Contractor, covered under the contract unit price for the structure.

METHOD OF MEASUREMENT

754-4.1 Concrete shall be measured by the cubic yard (cubic meter) in accordance with the dimensions shown on the plans or ordered by the Engineer. No deductions shall be made for the volume occupied by reinforcing steel, anchors, conduits, weep holes, or piling.

754-4.2 Reinforcing steel shall be measured by the pound (kg), based on the theoretical number of pounds (kg) complete in place as shown on the plans or placed as ordered by the Engineer.

BASIS OF PAYMENT

754-5.1 The accepted quantities of structural concrete will be paid for at the contract unit price per cubic yard (cubic meter) complete in place.

754-5.2 The accepted quantities of reinforcing steel will be paid for at the contract price per pound (kg) complete in place. No allowance shall be made for clips, wire, or other material used for fastening reinforcement in place.

Payment will be made under:

Item D-754-5.1	Structural Concrete—per cubic yard (cubic meter)
Item D-754-5.2	Reinforcing Steel—per pound (kg)

TESTING REQUIREMENTS

ASTM D 698	Moisture-Density Relations of Soils and Soil-Aggregate Mixtures Using 5.5 lb (2.49 kg) Rammer and 12-inch (300 mm) Drop
ASTM D 1556	Density of Soil in Place by the Sand-Cone Method
ASTM D 2167	Density of Soil in Place by the Rubber-Ballon Method

PART X—TURFING

ITEM T-901 SEEDING

DESCRIPTION

901-1.1 This item shall consist of soil preparation, seeding [ ] the areas shown on the plans or as directed by the Engineer in accordance with these specifications.

* *

The Engineer shall specify fertilizing or liming or both as needed for a specific project.

* *

MATERIALS

901-2.1 SEED. The species and application rates of grass, legume, and cover-crop seed furnished shall be those stipulated herein. Seed shall conform to the requirements of Fed. Spec. JJJ-S-181.

Seed shall be furnished separately or in mixtures in standard containers with the seed name, lot number, net weight, percentages of purity and of germination and hard seed, and percentage of maximum weed seed content clearly marked for each kind of seed. The Contractor shall furnish the Engineer duplicate signed copies of a statement by the vendor certifying that each lot of seed has been tested by a recognized laboratory for seed testing within 6 months of date of delivery. This statement shall include: name and address of laboratory, date of test, lot number for each kind of seed, and the results of tests as to name, percentages of purity and of germination, and percentage of weed content for each kind of seed furnished, and, in case of a mixture, the proportions of each kind of seed.

Seeds shall be applied as follows:

Seed	Minimum Seed Purity (Percent)	Minimum Germination (Percent)	Rate of Application lb./acre (or lb./1,000 S.F.)

Seeding shall be performed during the period between [ ] and [ ] inclusive, unless otherwise approved by the Engineer.

* *

Seeding dates, species and seeding rates must be specified that are compatible with local climate and soil conditions. Due consideration must be given to longevity of plants, resistance to traffic and erosion, and attraction of birds or large animals. More than one seeding season may be specified, if appropriate. Local offices of the USDA Soil Conservation Service and the State University Agricultural Extension Service (County Agent or equivalent) shall be consulted for assistance and recommendations. These agencies shall also be consulted for liming and fertilizer recommendations.

* *

901-2.2 LIME. Lime shall be ground limestone containing not less than 85% of total carbonates, and shall be ground to such fineness that 90% will pass through a No. 20 mesh sieve and 50% will pass through a No. 100 mesh sieve. Coarser material will be acceptable, providing the rates of application are increased to provide not less than the minimum quantities and depth specified in the special provisions on the basis of the two sieve requirements above. Dolomitic lime or a high magnesium lime shall contain at least 10% of mag-

nesium oxide. Lime shall be applied at the rate of [ ]. All liming materials shall conform to the requirements of ASTM C 602.

* *

The Engineer shall specify the application rate in pounds per acre.

* *

901-2.3 FERTILIZER. Fertilizer shall be standard commercial fertilizers supplied separately or in mixtures containing the percentages of total nitrogen, available phosphoric acid, and water-soluble potash. They shall be applied at the rate and to the depth specified herein, and shall meet the requirements of Fed. Spec. O-F-241 and applicable state laws. They shall be furnished in standard containers with name, weight, and guaranteed analysis of contents clearly marked thereon. No cyanamide compounds or hydrated lime shall be permitted in mixed fertilizers.

The fertilizers may be supplied in one of the following forms:

a. A dry, free-flowing fertilizer suitable for application by a common fertilizer spreader;

b. A finely-ground fertilizer soluble in water, suitable for application by power sprayers; or

c. A granular or pellet form suitable for application by blower equipment.

Fertilizers shall be [ ] commercial fertilizer and shall be spread at the rate of [ ].

* *

The Engineer shall specify the analysis and the application rate in pounds per acre. Paragraphs 2.2 and 2.3 shall be deleted if not applicable.

* *

901-2.4 SOIL FOR REPAIRS. The soil for fill and topsoiling of areas to be repaired shall be at least of equal quality to that which exists in areas adjacent to the area to be repaired. The soil shall be relatively free from large stones, roots, stumps, or other materials that will interfere with subsequent sowing of seed, compacting, and establishing turf, and shall be approved by the Engineer before being placed.

CONSTRUCTION METHODS

901-3.1 ADVANCE PREPARATION AND CLEANUP. After grading of areas has been completed and before applying fertilizer and ground limestone, areas to be seeded shall be raked or otherwise cleared of stones larger than 2 inches (50 mm) in any diameter, sticks, stumps, and other debris which might interfere with sowing of seed, growth of grasses, or subsequent maintenance of grass-covered areas. If any damage by erosion or other causes has occurred after the completion of grading and before beginning the application of fertilizer and ground limestone, the Contractor shall repair such damage. This may include filling gullies, smoothing irregularities, and repairing other incidental damage.

An area to be seeded shall be considered a satisfactory seedbed without additional treatment if it has recently been thoroughly loosened and worked to a depth of not less than 5 inches (125 mm) as a result of grading operations and, if immediately prior to seeding, the top 3 inches (75 mm) of soil is loose, friable, reasonably free from large clods, rocks, large roots, or other undesirable matter, and if shaped to the required grade.

However, when the area to be seeded is sparsely sodded, weedy, barren and unworked, or packed and hard, any grass and weeds shall first be cut or otherwise satisfactorily disposed of, and the soil then scarified or otherwise loosened to a depth not less than 5 inches (125 mm). Clods shall be broken and the top 3 inches (75 mm) of soil shall be worked into a satisfactory seedbed by discing, or by use of cultipackers, rollers, drags, harrows, or other appropriate means.

901-3.2 DRY APPLICATION METHOD.

a. LIMING. Lime shall be applied separately and prior to the application of any fertilizer or seed and only on seedbeds which have previously been prepared as described above. The lime shall then be

worked into the top 3 inches (75 mm) of soil after which the seedbed shall again be properly graded and dressed to a smooth finish.

b. Fertilizing. Following advance preparations and cleanup fertilizer shall be uniformly spread at the rate which will provide not less than the minimum quantity stated in paragraph 901-2.3.

* *

Delete paragraphs a. and b. if not applicable.

* *

c. Seeding. Grass seed shall be sown at the rate specified in paragraph 901-2.1 immediately after fertilizing, and the fertilizer and seed shall be raked within the depth range stated in the special provisions. Seeds of legumes, either alone or in mixtures, shall be inoculated before mixing or sowing, in accordance with the instructions of the manufacturer of the inoculant. When seeding is required at other than the seasons shown on the plans or in the special provisions, a cover crop shall be sown by the same methods required for grass and legume seeding.

d. Rolling. After the seed has been properly covered, the seedbed shall be immediately compacted by means of an approved lawnroller, weighing 40 to 65 pounds per foot (60 to 97 kg per meter) of width for clay soil (or any soil having a tendency to pack), and weighing 150 to 200 pounds per foot (223 to 298 kg per meter) of width for sandy or light soils.

901-3.3 WET APPLICATION METHOD.

a. General. The Contractor may elect to apply seed and fertilizer (and lime, if required) by spraying them on the previously prepared seedbed in the form of an aqueous mixture and by using the methods and equipment described herein. The rates of application shall be as specified in the special provisions.

b. Spraying Equipment. The spraying equipment shall have a container or water tank equipped with a liquid level gauge calibrated to read in increments not larger than 50 gallons (190 liters) over the entire range of the tank capacity, mounted so as to be visible to the nozzle operator. The container or tank shall also be equipped with a mechanical power-driven agitator capable of keeping all the solids in the mixture in complete suspension at all times until used.

The unit shall also be equipped with a pressure pump capable of delivering 100 gallons (380 liters) per minute at a pressure of 100 pounds per square inch (690 kPa). The pump shall be mounted in a line which will recirculate the mixture through the tank whenever it is not being sprayed from the nozzle. All pump passages and pipe lines shall be capable of providing clearance for 5/8 inch (15 mm) solids. The power unit for the pump and agitator shall have controls mounted so as to be accessible to the nozzle operator. There shall be an indicating pressure gauge connected and mounted immediately at the back of the nozzle.

The nozzle pipe shall be mounted on an elevated supporting stand in such a manner that it can be rotated through 360 degrees horizontally and inclined vertically from at least 20 degrees below to at least 60 degrees above the horizontal. There shall be a quick-acting, three-way control valve connecting the recirculating line to the nozzle pipe and mounted so that the nozzle operator can control and regulate the amount of flow of mixture delivered to the nozzle. At least three different types of nozzles shall be supplied so that mixtures may be properly sprayed over distance varying from 20 to 100 feet (6 to 30 m). One shall be a close-range ribbon nozzle, one a medium-range ribbon nozzle, and one a long-range jet nozzle. For case of removal and cleaning, all nozzles shall be connected to the nozzle pipe by means of quick-release couplings.

In order to reach areas inaccessible to the regular equipment, an extension hose at least 50 feet (15 m) in length shall be provided to which the nozzles may be connected.

c. Mixtures. Lime, if required, shall be applied separately, in the quantity specified, prior to the fertilizing and seeding operations. Not more than 220 pounds (100 kg) of lime shall be added to and mixed with each 100 gallons (380 liters) of water. Seed and fertilizer shall be mixed together in the relative proportions specified, but not more than a total of 220 pounds (100 kg) of these combined solids shall be added to and mixed with each 100 gallons (380 liters) of water.

All water used shall be obtained from fresh water sources and shall be free from injurious chemicals and other toxic substances harmful to plant life. Brackish water shall not be used at any time. The Contractor shall identify to the Engineer all sources of water at least 2 weeks prior to use. The Engineer may take samples of the water at the source or from the tank at any time and have a laboratory test the samples for chemical and saline content. The Contractor shall not use any water from any source which is disapproved by the Engineer following such tests.

All mixtures shall be constantly agitated from the time they are mixed until they are finally applied to the seedbed. All such mixtures shall be used within 2 hours from the time they were mixed or they shall be wasted and disposed of at locations acceptable to the Engineer.

d. Spraying. Lime, if required, shall be sprayed only upon previously prepared seedbeds. After the applied lime mixture has dried, the lime shall be worked into the top 3 inches (8 cm), after which the seedbed shall again be properly graded and dressed to a smooth finish.

Mixtures of seed and fertilizer shall only be sprayed upon previously prepared seedbeds on which the lime, if required, shall already have been worked in. The mixtures shall be applied by means of a high-pressure spray which shall always be directed upward into the air so that the mixtures will fall to the ground like rain in a uniform spray. Nozzles or sprays shall never be directed toward the ground in such a manner as might produce erosion or runoff.

Particular care shall be exercised to insure that the application is made uniformly and at the prescribed rate and to guard against misses and overlapped areas. Proper predetermined quantities of the mixture in accordance with specifications shall be used to cover specified sections of known area. Checks on the rate and uniformity of application may be made by observing the degree of wetting of the ground or by distributing test sheets of paper or pans over the area at intervals and observing the quantity of material deposited thereon.

On surfaces which are to be mulched as indicated by the plans or designated by the Engineer, seed and fertilizer applied by the spray method need not be raked into the soil or rolled. However, on surfaces on which mulch is not to be used, the raking and rolling operations will be required after the soil has dried.

901-3.4 MAINTENANCE OF SEEDED AREAS. The Contractor shall protect seeded areas against traffic or other use by warning signs or barricades, as approved by the Engineer. Surfaces gullied or otherwise damaged following seeding shall be repaired by regrading and reseeding as directed. The Contractor shall mow, water as directed, and otherwise maintain seeded areas in a satisfactory condition until final inspection and acceptance of the work.

When either the dry or wet application method outlined above is used for work done out of season, it will be required that the Contractor establish a good stand of grass of uniform color and density to the satisfaction of the Engineer. If at the time when the contract has been otherwise completed it is not possible to make an adequate determination of the color, density, and uniformity of such stand of grass, payment for the unaccepted portions of the areas seeded out of season will be withheld until such time as these requirements have been met.

METHOD OF MEASUREMENT

901-4.1 The quantity of seeding to be paid for shall be the number of units [**1,000 square feet (square meters)**][**acres (square meters)**] measured on the ground surface, completed and accepted.

BASIS OF PAYMENT

901-5.1 Payment shall be made at the contract unit price per [**1,000 square feet (square meters)**][**acre (square meters)**] or fraction thereof, which price and payment shall be full compensation for furnishing and placing all material and for all labor, equipment, tools, and incidentals necessary to complete the work prescribed in this item.

Payment will be made under:

Item 901-5.1	Seeding--per **[1,000 square feet (square meters)][acre (square meters)]**

MATERIAL REQUIREMENTS

ASTM C 602	Agricultural Liming Materials
ASTM D 977	Emulsified Asphalt
Fed. Spec. JJJ-S-181B	Agricultural Seeds
Fed. Spec. O-F-241D	Commercial Mixed Fertilizer

ITEM T-903 SPRIGGING

DESCRIPTION

903-1.1 This item shall consist of planting sprigs of living grass plants at the locations shown on the plans or as directed by the Engineer in accordance with these specifications.

MATERIALS

903-2.1 SPRIGS. Sprigs shall be healthy living stems (stolons or rhizomes), of the grass species stated in the special provisions, harvested without adhering soil and obtained from sources where the sod is heavy and thickly matted. The presence of weeds or other material which might be detrimental to the proposed planting will be cause for rejection of sprigs.

903-2.2 LIME. Lime shall conform to the requirements of 901-2.2.

903-2.3 FERTILIZER. Fertilizer shall conform to the requirements of 901-2.3.

* *

Paragraphs 2.2 and 2.3 shall be deleted if not applicable.

* *

903-2.4 WATER. All water used shall be sufficiently free from oil, acid, alkali, salt, or other harmful materials that would inhibit the growth of grass. Brackish water shall not be used at any time. It shall be subject to the approval of the Engineer prior to use.

903-2.5 SOIL FOR REPAIRS. The soil for fill, and topsoiling of areas to be repaired, shall conform to the requirements of 901-2.4.

CONSTRUCTION METHODS

903-3.1 GENERAL. Areas to be sprigged and the location of sprigging material, if available on the site, shall be shown on the plans. Areas requiring special ground surface preparation such as tilling, and those in a satisfactory condition to remain undisturbed, shall also be shown on the plans.

Suitable equipment necessary for proper preparation of the ground surface and for the handling and placing of all required materials shall be on hand, in good condition, and shall be approved by the Engineer before the various operations are started. The Contractor shall demonstrate to the Engineer, before starting the various operations, that the planting and application of required materials will be made at the specified rates.

When weather conditions are such that unsatisfactory results may occur, the work shall be stopped until the desired results can be obtained.

903-3.2 ADVANCE PREPARATION AND CLEANUP. After grading of areas has been completed and before applying fertilizer and limestone, areas to be sprigged shall be raked or otherwise cleared of stones larger than 2 inches (50 mm) in any diameter, sticks, stumps, and other debris which might interfere with sprigging, growth of grasses, or subsequent maintenance of grass-covered areas. If any damage by erosion or other causes has occurred after grading of areas and before beginning the application of fertilizer and ground limestone, the Contractor shall repair such damage. This may include filling gullies, smoothing irregularities, and repairing other incidental damage.

903-3.3 APPLYING FERTILIZER AND GROUND LIMESTONE. Following advance preparation and cleanup, fertilizer shall be uniformly spread at a rate which will provide not less than the minimum quantity of each fertilizer ingredient as stated in the special provisions. If use of ground limestone is required, it shall then be spread at a rate which will provide not less than the minimum quantity stated in the special provisions. These materials shall be incorporated into the soil to a depth of not less than 2 inches (50 mm) by

discing, raking, or other methods acceptable to the Engineer. Any stones larger than 2 inches (50 mm)in any diameter, large clods, roots, and other litter brought to the surface by this operation shall be removed.

In steep slopes where fertilizer and ground limestone cannot be incorporated effectively by mechanical equipment, they may be applied with power sprayers, blower equipment, or other approved method, and need not be incorporated into the soil.

903-3.4 HARVESTING SPRIGS. The sprigs obtained from sources off the site shall be from suitable areas as close as practical to the planting site. regardless of the source, sprigging material which contains grass and weeds taller than 6 inches (150 mm) shall be mowed to a height of 3 inches (75 mm), and the clippings raked and removed before harvesting begins. Harvesting may be performed by any method acceptable to the Engineer, including crisscross cultivation, shallow plowing, or other acceptable methods to thoroughly loosen the sprigs from the soil and to bring them to the surface. After loosening the sprigs from the soil, they shall be gathered in small piles or windrows, watered, and kept moist until planted.

Not more than 24 hours shall elapse between harvesting and planting sprigs, except that, when weather or other uncontrollable conditions interrupt the work, a time extension may be granted, provided the sprigs are still moist and viable. Sprigs that have heated in stockpiles, have become frozen, permitted to dry out, or otherwise seriously damaged during harvesting or delivery shall be rejected and shall be disposed of as directed by the Engineer.

903-3.5 PLANTING SPRIGS. Sprigging shall be done only within the periods stipulated in the special provisions. Sprigging shall not be done during windy weather, or when the ground is dry, excessively wet, frozen, or otherwise untillable. If the soil is not moist when the sprigs are being set, water shall be applied until the soil is moist and in a workable condition. one or more of the following methods shall be used, whichever is shown on the plans or stated in the special provisions:

a. Broadcast Sprigging. Sprigs shall be broadcast by hand or by suitable equipment in a uniform layer over the prepared surface with spacing between sprigs not to exceed 6 inches (150 mm). The sprigs shall then be forced into the soil to a depth of 2 to 4 inches (50 to 100 mm) with a straight spade or similar tool, or with a disc harrow or other equipment set to cover the sprigs to the required depth.

b. Row Sprigging. Furrows shall be opened along the approximate contour of slopes at the spacing and depth stated in the special provisions. Sprigs shall be placed without delay in a continuous row in the open furrow with successive sprigs touching, and they shall be covered immediately.

c. Spot Sprigging. Spot sprigging shall be performed as specified under row sprigging, except that groups of 4 sprigs or more shall be spaced 18 inches (45 cm) apart in the rows.

903-3.6 MULCHING AND COMPACTING. After planting of sprigs has been completed and prior to compacting, the surface shall be cleared of stones larger than 2 inches (50 mm) in any diameter, large clods, roots, and other litter brought to the surface during sprigging.

If mulching of sprigged areas is shown on the plans or stated in the special provisions, the sprigged areas shall be covered with mulch in accordance with the requirements of Item T-908 within 24 hours from the time sprigging has been completed, weather and soil conditions permitting.

If mulching is not shown on the plans nor stated in the special provisions, the sprigged area shall be compacted within 24 hours from the time sprigging has been completed, weather and soil conditions permitting, by cultipackers, rollers, or other satisfactory equipment operated at right angles to the slope. Compaction shall not be done when the soil is in such condition that it is picked up by the equipment.

903-3.7 ESTABLISHING TURF. The Contractor shall be responsible for the proper care of the sprigged areas during the period when the plants are becoming established and he shall protect the sprigged areas against traffic by warning signs or barricades approved by the Engineer. Surfaces gullied or otherwise damaged following sprigging shall be repaired by regrading and resprigging as directed. The Contractor shall mow, water as directed, and otherwise maintain sprigged areas in a satisfactory condition until final inspection and acceptance of the work.

METHOD OF MEASUREMENT

903–4.1 Sprigging shall be measured by the number of units of 1,000 square feet (100 square meters), measured on the ground surface, completed and accepted.

BASIS OF PAYMENT

903–5.1 Payment will be made at the contract unit price per 1,000 square feet (100 square meters) or fraction thereof. This price shall be full compensation for furnishing and placing all material including any required mulching of sprigged areas, and for all labor, equipment, tools, and incidentals necessary to complete the work prescribed in this item.

Payment will be made under:

Item 903–5.1	Sprigging—per 1,000 square feet (100 square meters)

ITEM T-904 SODDING

DESCRIPTION

904-1.1 This item shall consist of furnishing, hauling, and placing approved live sod on prepared areas in accordance with this specification at the locations shown on the plans or as directed by the Engineer.

MATERIALS

904-2.1 SOD. Sod furnished by the Contractor shall have a good cover of living or growing grass. This shall be interpreted to include grass that is seasonally dormant during the cold or dry seasons and capable of renewing growth after the dormant period. All sod shall be obtained from areas where the soil is reasonably fertile and contains a high percentage of loamy topsoil. Sod shall be cut or stripped from living, thickly matted turf relatively free of weeds or other undesirable foreign plants, large stones, roots, or other materials which might be detrimental to the development of the sod or to future maintenance. At least 70% of the plants in the cut sod shall be composed of the species stated in the special provisions, and any vegetation more than 6 inches (150 mm) in height shall be mowed to a height of 3 inches (75 mm) or less before sod is lifted. Sod, including the soil containing the roots and the plant growth showing above, shall be cut uniformly to a thickness not less than that stated in the special provisions.

904-2.2 LIME. Lime shall conform to the requirements of 901-2.2.

904-2.3 FERTILIZER. Fertilizer shall conform to the requirements of 901-2.3.

* *

Delete paragraphs 2.2 and 2.3 if not applicable.

* *

904-2.4 WATER. The water shall be sufficiently free from oil, acid, alkali, salt, or other harmful materials that would inhibit the growth of grass. It shall be subject to the approval of the Engineer prior to use.

904-2.5 SOIL FOR REPAIRS. The soil for fill and topsoiling of areas to be repaired shall conform to the requirements of 901-2.4.

CONSTRUCTION METHODS

904-3.1 GENERAL. Areas to be solid, strip, or spot sodded shall be shown on the plans. Areas requiring special ground surface preparation such as tilling and those areas in a satisfactory condition which are to remain undisturbed shall also be shown on the plans.

Suitable equipment necessary for proper preparation of the ground surface and for the handling and placing of all required materials shall be on hand, in good condition, and shall be approved by the Engineer before the various operations are started. The Contractor shall demonstrate to the Engineer before starting the various operations that the application of required materials will be made at the specified rates.

904-3.2 PREPARING THE GROUND SURFACE. After grading of areas has been completed and before applying fertilizer and limestone, areas to be sodded shall be raked or otherwise cleared of stones larger than 2 inches (50 mm) in any diameter, sticks, stumps, and other debris which might interfere with sodding, growth of grasses, or subsequent maintenance of grass-covered areas. If any damage by erosion or other causes occurs after grading of areas and before beginning the application of fertilizer and ground limestone, the Contractor shall repair such damage. This may include filling gullies, smoothing irregularities, and repairing other incidental damage.

904-3.3 APPLYING FERTILIZER AND GROUND LIMESTONE. Following ground surface preparation, fertilizer shall be uniformly spread at a rate which will provide not less than the minimum quantity of each fertilizer ingredient, as stated in the special provisions. If use of ground limestone is required, it shall

then be spread at a rate which will provide not less than the minimum quantity stated in the special provisions. These materials shall be incorporated into the soil to a depth of not less than 2 inches (50 mm) by discing, raking, or other methods acceptable to the Engineer. Any stones larger than 2 inches (50 mm) in any diameter, large clods, roots, and other litter brought to the surface by this operation shall be removed.

904-3.4 OBTAINING AND DELIVERING SOD. After inspection and approval of the source of sod by the Engineer, the sod shall be cut with approved sod cutters to such a thickness that after it has been transported and placed on the prepared bed, but before it has been compacted, it shall have a uniform thickness of not less than 2 inches (50 mm). Sod sections or strips shall be cut in uniform widths, not less than 10 inches (250 mm), and in lengths of not less than 18 inches (45 cm), but of such length as may be readily lifted without breaking, tearing, or loss of soil. Where strips are required, the sod must be rolled without damage with the grass folded inside. The Contractor may be required to mow high grass before cutting sod.

The sod shall be transplanted within 24 hours from the time it is stripped, unless circumstances beyond the Contractor's control make storing necessary. In such cases, sod shall be stacked, kept moist, and protected from exposure to the air and sun and shall be kept from freezing. Sod shall be cut and moved only when the soil moisture conditions are such that favorable results can be expected. Where the soil is too dry, permission to cut sod may be granted only after it has been watered sufficiently to moisten the soil to the depth the sod is to be cut.

904-3.5 LAYING SOD. Sodding shall be performed only during the seasons when satisfactory results can be expected. Frozen sod shall not be used and sod shall not be placed upon frozen soil. Sod may be transplanted during periods of drought with the approval of the Engineer, provided the sod bed is watered to moisten the soil to a depth of at least 4 inches (100 mm) immediately prior to laying the sod.

The sod shall be moist and shall be placed on a moist earth bed. pitch forks shall not be used to handle sod, and dumping from vehicles shall not be permitted. The sod shall be carefully placed by hand, edge to edge and with staggered joints, in rows at right angles to the slopes, commencing at the base of the area to be sodded and working upward. The sod shall immediately be pressed firmly into contact with the sod bed by tamping or rolling with approved equipment to provide a true and even surface, and insure knitting without displacement of the sod or deformation of the surfaces of sodded areas. Where the sod may be displaced during sodding operations, the workmen when replacing it shall work from ladders or treaded planks to prevent further displacement. Screened soil of good quality shall be used to fill all cracks between sods. The quantity of the fill soil shall not cause smothering of the grass. Where the grades are such that the flow of water will be from paved surfaces across sodded areas, the surface of the soil in the sod after compaction shall be set approximately 1 inch (25 mm) below the pavement edge. Where the flow will be over the sodded areas and onto the paved surfaces around manholes and inlets, the surface of the soil in the sod after compaction shall be placed flush with pavement edges.

On slopes steeper than 1 vertical to 2-1/2 horizontal and in v-shaped or flat-bottom ditches or gutters, the sod shall be pegged with wooden pegs not less than 12 inches (300 mm) in length and have a cross-sectional area of not less than 3/4 square inch (18 square millimeter). The pegs shall be driven flush with the surface of the sod.

904-3.6 WATERING. Adequate water and watering equipment must be on hand before sodding begins, and sod shall be kept moist until it has become established and its continued growth assured. In all cases, watering shall be done in a manner which will avoid erosion from the application of excessive quantities and will avoid damage to the finished surface.

904-3.7 ESTABLISHING TURF.

a. General. The Contractor shall provide general care for the sodded areas as soon as the sod has been laid and shall continue until final inspection and acceptance of the work.

b. Protection. All sodded areas shall be protected against traffic or other use by warning signs or barricades approved by the Engineer.

c. Mowing. The Contractor shall mow the sodded areas with approved mowing equipment, depending upon climatic and growth conditions and the needs for mowing specific areas. In the event that weeds or other undesirable vegetation are permitted to grow to such an extent that, either cut or uncut, they

threaten to smother the sodded species, they shall be mowed and the clippings raked and removed from the area.

904–3.8 Repairing. When the surface has become bullied or otherwise damaged during the period covered by this contract, the affected areas shall be repaired to re–establish the grade and the condition of the soil, as directed by the Engineer, and shall then be sodded as specified in 904–3.5.

METHOD OF MEASUREMENT

904–4.1 This item shall be measured on the basis of the area in square yards (square meters) of the surface covered with sod and accepted.

BASIS OF PAYMENT

904–5.1 This item will be paid for on the basis of the contract unit price per square yard (square meter) for sodding, which price shall be full compensation for all labor, equipment, material, staking, and incidentals necessary to satisfactorily complete the items as specified.

Payment will be made under:

Item T–904–5.1	Sodding—per square yard (square meter)

ITEM T-905 TOPSOILING

DESCRIPTION

905-1.1 This item shall consist of preparing the ground surface for topsoil application, removing topsoil from designated stockpiles or areas to be stripped on the site or from approved sources off the site, and placing and spreading the topsoil on prepared areas in accordance with this specification at the locations shown on the plans or as directed by the Engineer.

MATERIALS

905-2.1 TOPSOIL. Topsoil shall be the surface layer of soil with no admixture of refuse or any material toxic to plant growth, and it shall be reasonably free from subsoil and stumps, roots, brush, stones (2 inches or more in diameter), clay lumps or similar objects. Brush and other vegetation which will not be incorporated with the soil during handling operations shall be cut and removed. Ordinary sods and herbaceous growth such as grass and weeds are not to be removed but shall be thoroughly broken up and intermixed with the soil during handling operations. The topsoil or soil mixture, unless otherwise specified or approved, shall have a pH range of approximately 5.5 pH to 7.6 pH, when tested in accordance with the methods of testing of the association of official agricultural chemists in effect on the date of invitation of bids. The organic content shall be not less than 3% nor more than 20% as determined by the wet-combustion method (chromic acid reduction). there shall be not less than 20% nor more than 80% of the material passing the 200 mesh (0.075 mm) sieve as determined by the wash test in accordance with ASTM C 117.

Natural topsoil may be amended by the Contractor with approved materials and methods to meet the above specifications.

905-2.2 INSPECTION AND TESTS. Within 10 days following acceptance of the bid, the Engineer shall be notified of the source of topsoil to be furnished by the Contractor. The topsoil shall be inspected to determine if the selected soil meets the requirements specified and to determine the depth to which stripping will be permitted. At this time, the Contractor may be required to take representative soil samples from several locations within the area under consideration and to the proposed stripping depths, for testing purposes as specified in 905-2.1.

CONSTRUCTION METHODS

905-3.1 GENERAL. Areas to be topsoiled shall be shown on the plans. If topsoil is available on the site, the location of the stockpiles or areas to be stripped of topsoil and the stripping depths shall be shown on the plans.

Suitable equipment necessary for proper preparation and treatment of the ground surface, stripping of topsoil, and for the handling and placing of all required materials shall be on hand, in good condition, and approved by the Engineer before the various operations are started.

905-3.2 PREPARING THE GROUND SURFACE. Immediately prior to dumping and spreading the topsoil on any area, the surface shall be loosened by discs or spike-tooth harrows, or by other means approved by the Engineer, to a minimum depth of 2 inches (50 mm) to facilitate bonding of the topsoil to the covered subgrade soil. The surface of the area to be topsoiled shall be cleared of all stones larger than 2 inches (50 mm) in any diameter and all litter or other material which may be detrimental to proper bonding, the rise of capillary moisture, or the proper growth of the desired planting. Limited areas, as shown on the plans, which are too compact to respond to these operations shall receive special scarification.

Grades on the area to be topsoiled, which have been established by others as shown on the plans, shall be maintained in a true and even condition. Where grades have not been established, the areas shall be smooth-graded and the surface left at the prescribed grades in an even and properly compacted condition to prevent, insofar as practical, the formation of low places or pockets where water will stand.

905-3.3 OBTAINING TOPSOIL. Prior to the stripping of topsoil from designated areas, any vegetation, briars, stumps and large roots, rubbish or stones found on such areas, which may interfere with subsequent operations, shall be removed using methods approved by the Engineer. Heavy sod or other cover, which cannot be incorporated into the topsoil by discing or other means shall be removed.

When suitable topsoil is available on the site, the Contractor shall remove this material from the designated areas and to the depth as directed by the Engineer. The topsoil shall be spread on areas already tilled and smooth-graded, or stockpiled in areas approved by the Engineer. Any topsoil stockpiled by the Contractor shall be rehandled and placed without additional compensation. Any topsoil that has been stockpiled on the site by others, and is required for topsoiling purposes, shall be removed and placed by the Contractor. The sites of all stockpiles and areas adjacent thereto which have been disturbed by the Contractor shall be graded if required and put into a condition acceptable for seeding.

When suitable topsoil is secured off the airport site, the Contractor shall locate and obtain the supply, subject to the approval of the Engineer. The Contractor shall notify the Engineer sufficiently in advance of operations in order that necessary measurements and tests can be made. The Contractor shall remove the topsoil from approved areas and to the depth as directed. The topsoil shall be hauled to the site of the work and placed for spreading, or spread as required. Any topsoil hauled to the site of the work and stockpiled shall be rehandled and placed without additional compensation.

905-3.4 PLACING TOPSOIL. The topsoil shall be evenly spread on the prepared areas to a uniform depth of 2 inches (50 mm) after compaction, unless otherwise shown on the plans or stated in the special provisions. Spreading shall not be done when the ground or topsoil is frozen, excessively wet, or otherwise in a condition detrimental to the work. Spreading shall be carried on so that turfing operations can proceed with a minimum of soil preparation or tilling.

After spreading, any large, stiff clods and hard lumps shall be broken with a pulverizer or by other effective means, and all stones or rocks (2 inches (50 mm) or more in diameter), roots, litter, or any foreign matter shall be raked up and disposed of by the Contractor. after spreading is completed, the topsoil shall be satisfactorily compacted by rolling with a cultipacker or by other means approved by the Engineer. The compacted topsoil surface shall conform to the required lines, grades, and cross sections. Any topsoil or other dirt falling upon pavements as a result of hauling or handling of topsoil shall be promptly removed.

METHOD OF MEASUREMENT

905-4.1 Topsoil obtained on the site shall be measured by the number of cubic yards (cubic meters) of topsoil measured in its original position and stripped or excavated. Topsoil stockpiled by others and removed for topsoiling by the Contractor shall be measured by the number of cubic yards (cubic meters) of topsoil measured in the stockpile. Topsoil shall be measured by volume in cubic yards (cubic meters) computed by the method of end areas.

905-4.2 Topsoil obtained off the site shall be measured by the number of cubic yards (cubic meters) of topsoil measured in its original position and stripped or excavated. Topsoil shall be measured by volume in cubic yards (meters) computed by the method of end areas.

BASIS OF PAYMENT

905-5.1 Payment will be made at the contract unit price per cubic yard (cubic meter) for topsoiling (obtained on the site). This price shall be full compensation for furnishing all materials and for all preparation, placing, and spreading of the materials, and for all labor, equipment, tools, and incidentals necessary to complete the item.

905-5.2 Payment will be made at the contract unit price per cubic yard (cubic meter) for topsoiling (obtained off the site). This price shall be full compensation for furnishing all materials and for all preparation, placing, and spreading of the materials, and for all labor, equipment, tools, and incidentals necessary to complete the item.

Payment will be made under:

Item T-905-5.1	Topsoiling (Obtained on Site or Removed from Stockpile--per cubic yard (cubic meter)
Item T-905-5.2	Topsoiling (Furnished from Off the Site)--per cubic yard (cubic meter)

ITEM T-907 TILLING

DESCRIPTION

907-1.1 This item shall consist of preparing the surface of areas for dust control or erosion control in accordance with this specification at the locations shown on the plans or as directed by the Engineer.

CONSTRUCTION METHODS

907-3.1 GENERAL. Areas to be tilled and areas requiring special attention and tilling shall be shown on the plans.

The tilling work shall be performed only during periods when beneficial and satisfactory results can be reasonably expected. The work shall be stopped when it is unlikely that the desired results will be obtained, due to excessive drought, moisture conditions, or other factors, and resumed only when the conditions again are favorable.

Suitable equipment necessary for proper tilling and for handling all required materials shall be on hand, in good operating condition, and approved by the Engineer before the various operations are started.

907-3.2 TILLING.

a. General. Prior to the commencement of tilling operations, all heavy growths of vegetation on areas shown on the plans to be tilled shall be mowed, raked and burned, used for mulch if suitable, or hauled off the site, as directed by the Engineer.

During tilling operations, the ground surface shall be kept cleared of all cable, wire, or any other waste materials which might hinder final grading, planting, or subsequent maintenance operations. Any irregularities in the surface resulting from tilling or other operations of the Contractor shall be corrected insofar as practical to prevent the formation of low places and pockets where water will stand.

The proper graded areas shall be tilled by the Contractor with suitable plows, discs, scarifying machines, or other power-drawn implements approved by the Engineer.

b. For Dust and Erosion Control. The areas to be tilled for dust or erosion control shall be loosened to a depth of at least 4 inches (10 cm) by a tiller tool so that clods will be left on the surface of the ground. In areas where such penetration cannot be accomplished by a tiller tool in one operation, a heavy scarifier shall be used first. On areas 250 feet (76 m) or more from the centerline of runways, as shown on the plans, on which scarifiers will not produce clods of sufficient size and quantity to provide adequate control by the above operation, furrows shall be opened on approximately 36-inch (90 cm) centers to a depth of 5 inches (12 cm) by using an approved type lister. Tilling operations shall commence on the windward side of the field and at right angles to the prevailing wind except on runway shoulders, where they shall be parallel to the pavements. Equipment and operations, other than those specified above, may be used subject to the approval of the Engineer.

907-3.3 SMOOTH GRADING. Where final grades have been established by others, they shall be shown on the plans. Where grades have not been established, the areas shall be smooth graded and the surfaces left at the prescribed grades in an even and properly compacted condition which, insofar as practical, will prevent the formation of low places and pockets where water will stand.

METHOD OF MEASUREMENT

907-4.1 Tilling shall be measured by the number of acres (square meter), measured by surface area, tilled, smooth graded, and accepted.

BASIS OF PAYMENT

907-5.1 Payment will be made at the contract unit price per acre (square meter) for tilling. This price shall be full compensation for furnishing all materials and for all preparation, operation and smooth grading, and for all labor, equipment, tools and incidentals necessary to complete the item.

Payment will be made under:

Item T-907-5.1	Tilling--per acre (square meter)

ITEM T-908 MULCHING

DESCRIPTION

908-1.1 This item shall consist of furnishing, hauling, placing, and securing mulch on surfaces indicated on the plans or designated by the Engineer.

MATERIALS

908-2.1 MULCH MATERIAL. Acceptable mulch shall be the materials listed below or any approved locally available material that is similar to those specified. Low grade, musty, spoiled, partially rotted hay, straw, or other materials unfit for animal consumption will be acceptable. Mulch materials, which contain matured seed of species which would volunteer and be detrimental to the proposed overseeding, or to surrounding farm land, will not be acceptable. Straw or other mulch material which is fresh and/or excessively brittle, or which is in such an advanced stage of decomposition as to smother or retard the planted grass, will not be acceptable.

a. Hay. Hay shall be native hay, sudan grass hay, broomsedge hay, legume hay, or similar hay or grass clippings.

b. Straw. Straw shall be the threshed plant residue of oats, wheat, barley, rye, or rice from which grain has been removed.

c. Hay Mulch Containing Seed. Hay mulch shall be mature hay containing viable seed of native grasses or other desirable species stated in the special provisions or as approved by the Engineer. The hay shall be cut and handled so as to preserve the maximum quantity of viable seed. Hay mulch which cannot be hauled and spread immediately after cutting shall be placed in weather-resistant stacks or baled and stored in a dry location until used.

d. Manufactured Mulch. Cellulose-fiber or wood-pulp mulch shall be products commercially available for use in spray applications.

e. Asphalt Binder. Asphalt binder material shall conform to the requirements of ASTM D 977, Type SS-1 or RS-1.

908-2.2 INSPECTION. Within 5 days after acceptance of the bid, the Engineer shall be notified of sources and quantities of mulch materials available and the Contractor shall furnish him with representative samples of the materials to be used. These samples may be used as standards with the approval of the Engineer and any materials brought on the site which do not meet these standards shall be rejected.

CONSTRUCTION METHODS

908-3.1 MULCHING. Before spreading mulch, all large clods, stumps, stones, brush, roots, and other foreign material shall be removed from the area to be mulched. Mulch shall be applied immediately after seeding. The spreading of the mulch may be by hand methods, blower, or other mechanical methods, provided a uniform covering is obtained.

Mulch material shall be furnished, hauled, and evenly applied on the area shown on the plans or designated by the Engineer. Straw or hay shall be spread over the surface to a uniform thickness at the rate of 2 to 3 tons per acre (1800-2700 kg per acre) to provide a loose depth of not less than 1-1/2 inches (37 cm) nor more than 3 inches (75 mm). Other organic material shall be spread at the rate directed by the Engineer. Mulch may be blown on the slopes and the use of cutters in the equipment for this purpose will be permitted to the extent that at least 95% of the mulch in place on the slope shall be 6 inches (150 mm) or more in length. When mulches applied by the blowing method are cut, the loose depth in place shall be not less than 1 inch (25 mm) nor more than 2 inches (50 mm).

908-3.2 SECURING MULCH. The mulch shall be held in place by light discing, a very thin covering of topsoil, small brush, pins, stakes, wire mesh, asphalt binder, or other adhesive material approved by the Engineer. Where mulches have been secured by either of the asphalt binder methods, it will not be permissible to walk on the slopes after the binder has been applied. The Contractor is warned that in the application of asphalt binder material he must take every precaution to guard against damaging or disfiguring structures or property on or adjacent to the areas worked and that he will be held responsible for any such damage resulting from his/her operations.

If the "peg and string" method is used, the mulch shall be secured by the use of stakes or wire pins driven into the ground on 5-foot (150 m) centers or less. Binder twine shall be strung between adjacent stakes in straight lines and crisscrossed diagonally over the mulch, after which the stakes shall be firmly driven nearly flush to the ground to draw the twine down tight onto the mulch.

908-3.3 CARE AND REPAIR.

a. The Contractor shall care for the mulched areas until final acceptance of the project. Such care shall consist of providing protection against traffic or other use by placing warning signs, as approved by the Engineer, and erecting any barricades that may be shown on the plans before or immediately after mulching has been completed on the designated areas.

b. The Contractor shall be required to repair or replace any mulching that is defective or becomes damaged until the project is finally accepted. When, in the judgment of the Engineer, such defects or damages are the result of poor workmanship or failure to meet the requirements of the specifications, the cost of the necessary repairs or replacement shall be borne by the Contractor. However, once the Contractor has completed the mulching of any area in accordance with the provisions of the specifications and to the satisfaction of the Engineer, no additional work at his/her expense will be required, but subsequent repairs and replacements deemed necessary by the Engineer shall be made by the Contractor and will be paid for as additional or extra work.

c. If the "asphalt spray" method is used, all mulched surfaces shall be sprayed with asphalt binder material so that the surface has a uniform appearance. The binder shall be uniformly applied to the mulch at the rate of approximately 8.0 gallons (32 liters) per 1,000 square feet (100 square meters), or as directed by the Engineer, with a minimum of 6.0 gallons (24 liters) and a maximum of 10 gallons (40 liters) per 1,000 square feet (100 square meters) depending on the type of mulch and the effectiveness of the binder securing it. Bituminous binder material may be sprayed on the mulched slope areas from either the top or the bottom of the slope. An approved spray nozzle shall be used. The nozzle shall be operated at a distance of not less than 4 feet (120 cm) from the surface of the mulch and uniform distribution of the bituminous material shall be required. A pump or an air compressor of adequate capacity shall be used to insure uniform distribution of the bituminous material.

d. If the "asphalt mix" method is used, the mulch shall be applied by blowing, and the asphalt binder material shall be sprayed into the mulch as it leaves the blower. The binder shall be uniformly applied to the mulch at the rate of approximately 8.0 gallons (32 liters) per 1,000 square feet (100 square meters) or as directed by the Engineer, with a minimum of 6.0 gallons (24 liters) and a maximum of 10 gallons (40 liters) per 1,000 square feet (100 square meters) depending on the type of mulch and the effectiveness of the binder securing it.

METHOD OF MEASUREMENT

908-4.1 Mulching shall be measured in square yards (square meters) on the basis of the actual surface area acceptably mulched.

BASIS OF PAYMENT

908-5.1 Payment will be made at the contract unit price per square yard (square meter) for mulching. The price shall be full compensation for furnishing all materials and for placing and anchoring the materials, and for all labor, equipment, tools, and incidentals necessary to complete the item.

Payment will be made under:

Item T-908-5.1	Mulching--per square yard (square meter)

MATERIAL REQUIREMENTS

ASTM D 977	Emulsified Asphalt

PART XI—LIGHTING INSTALLATION

ITEM L-101 INSTALLATION OF AIRPORT ROTATING BEACONS

DESCRIPTION

101-1.1 This item shall consist of furnishing and installing airport rotating beacons. This work shall include the mounting, leveling, wiring, painting, servicing, and testing of the beacon and all materials and incidentals necessary to place the beacons in operating condition as a completed unit to the satisfaction of the Engineer. This item shall include a mounting platform if specified in the plans.

EQUIPMENT AND MATERIALS

101-2.1 GENERAL.

a. Airport lighting equipment and materials covered by Federal Aviation Administraton (FAA) specifications shall have the prior approval of the FAA, and are listed in Advisory Circular (AC) 150/5345-1, Approved Airport Equipment.

b. All other equipment and materials covered by other referenced specifications shall be subject to acceptance through manufacturer's certification of compliance with the applicable specification when requested by the Engineer.

101-2.2 BEACON. The beacon shall meet the requirements of AC 150/5345-12, Specification for Airport and Heliport Beacons.

101-2.3 PANEL BOARDS AND BREAKERS. Panel boards and breakers shall conform to the requirements of Fed. Spec. W-P-115.

101-2.4 WEATHERPROOF CABINETS. The weatherproof cabinets shall conform to National Electrical Manufacturers Association Standards and shall be constructed of steel not less than No. 16 USS gauge.

101-2.5 WIRE. Wire in conduit rated up to 5,000 volts shall conform to AC 150/5345-7, Specification for L-824 Underground Electrical Cable for Airport Lighting Circuits for Rubber Insulated Neoprene Covered Wire, or Fed. Spec. J-C-30, Type RHW, for rubber insulated fibrous covered wire. For ratings up to 600 volts, the thermoplastic wire conforming to Fed. Spec. J-C-30, Types TW, THW, and THWN, shall be used. The wires shall be of the type, size, number of conductors, and voltage shown in the plans or in the proposal.

101-2.6 CONDUIT. Rigid steel conduit and fittings shall conform to the requirements of Underwriters Laboratories Standard 6, 514, and 1242.

101-2.7 PAINT.

a. Red lead priming paint for ungalvanized metal surfaces and the mixing thereof shall conform to the 97% grade in ASTM D 83. The red lead shall be furnished in paste form and delivered to the job in the original unbroken packages bearing the marker's name and brand.

b. Priming paint for galvanized metal surfaces shall be zinc dust-zinc oxide primer paint conforming to Fed. Spec. TT-P-641. If necessary, add not more than 1/2 pint (0.06 liter) of turpentine to each gallon (liter).

c. Orange paint for the body and the finish coats on metal and wood surfaces shall consist of a ready-mixed non-fading paint meeting the requirements of Fed. Spec. TT-P-59. The color shall be in accordance with Federal Standard 595, Aviation Gloss Orange Number 12197.

d. White paint for body and finish coats on metal and wood surfaces shall be ready-mixed paint conforming to Fed. Spec. TT-P-102.

e. Priming paint for wood surfaces shall be mixed on the job by thinning the above specified orange or white paint with 1/2 pint (0.06 mm) of raw linseed oil to each gallon (liter).

CONSTRUCTION METHODS

101-3.1 PLACING THE BEACON. The beacon shall be mounted on a beacon tower, platform, or building roof as shown in the plans.

101-3.2 HOISTING AND MOUNTING. The beacon shall be hoisted to the mounting platform by using suitable slings and hoisting tackle. Before fastening the beacon to the mounting platform, the mounting holes shall be checked for correct spacing. Beacon base or mounting legs shall not be strained or forced out of position to fit incorrect spacing of mounting holes. The beacon base shall be raised first, set in position, and bolted in place. The drum shall then be raised and assembled to the base.

101-3.3 LEVELING. After the beacon has been mounted in place, it shall be accurately leveled. The leveling shall be checked in the presence of the Engineer and shall be to the Engineer's satisfaction.

101-3.4 SERVICING. Before placing the beacon in operation, the Contractor shall accomplish the following:

a. Clean and polish all glassware, both inside and outside, using a type of cleaner which will not scratch the lens, and clean the interior of the beacon.

b. Clean interior of beacon base and check for alignment of parts.

c. Clean and polish slip rings. Apply a very small amount of vaseline to the slip rings, operate about 1/2 hour, then wipe the surplus off the rings. Remove the brushes and lubricate the chamber of brush holders.

d. Grease gears of rotating mechanism where gears are accessible. Check to see if gears mesh properly, and turn the motor shaft by hand to ascertain if action of gear train is free. Check and adjust the clutch tension. The clutch should be not quite tight enough to stall the motor when the lamp-rotating element is held fast. fill grease fittings with grease conforming to the manufacturer's or Engineer's recommendations.

e. Set brushes for free motion on slip rings, and adjust springs to 1 or 2 pounds (454 to 908 grams) pressure to provide firm contact.

f. Secure lamps properly in the sockets.

101-3.5 BEAM ADJUSTMENT. After the beacon has been mounted and leveled, the elevation of the beams shall be adjusted. The final beam adjustments shall be made at night so that results can be readily observed. The beams shall be adjusted to the elevation directed by the Engineer or as shown in the plans, except that, in no case shall the elevation of the beams be less than 2 degrees above the horizontal.

101-3.6 BEACON MOUNTING PLATFORM. Where the beacon is to be mounted at a location other than the beacon tower and where a special mounting platform is required, the construction of this mounting platform and any necessary lightning protection equipment shall be in accordance with the details shown in the plans.

101-3.7 WIRING. The Contractor shall furnish all necessary labor and materials and shall make complete above ground electrical connections in accordance with the wiring diagram furnished with the project plans.

If underground cable for the power feed from the transformer vault to the beacon site and duct for this cable installation under paved areas is required, the cable and duct shall be installed in accordance with and paid for by linear foot measurement as described in Item L-108, Installation of Underground Cable for Airports, and Item L-110, Installation of Airport Underground Electrical Duct.

Unless otherwise specified, the Contractor shall connect the tell-tale relay mechanism in the beacon to energize the tower obstruction light circuit when failure of the beacon service (primary) lamp occurs.

If lightning protection is specified in the plans or proposal as a part of this item, it shall be in accordance with 103-2.3, 103-2.4, 103-2.5, 103-2.6, and 103-3.4 in Item L-103, Installation of Airport Beacon Towers.

101-3.8 PANEL AND CABINET. Unless otherwise specified, the Contractor shall furnish and install at the top of the beacon tower or mounting platform a circuit-breaker panel consisting of four 15-ampere breakers mounted in a weather-proof cabinet to provide separate protection for the circuits to the beacon

lamps, motor, obstruction lights, and other equipment. The cabinet shall be located on the side of the beacon platform, as directed by the Engineer.

101-3.9 CONDUIT. All exposed wiring shall be run in not less than 1/2 inch galvanized rigid steel conduit. No conduit shall be installed on top of a beacon platform floor. All conduit shall be installed to provide for drainage. If mounted on a steel beacon tower, the conduit shall be fastened to the tower members with "wraplock" straps, clamps, or approved fasteners, spaced approximately 5 feet (150 cm) apart. The conduit shall be fastened to wooden structures with galvanized pipe straps and with galvanized wood screws not less than No. 8 nor less than 1-1/4 inches (31 mm) long. There shall be at least two fastenings for each 10-foot (3 m) length.

101-3.10 BOOSTER TRANSFORMER. If shown in the plans or specified in job specifications, a booster transformer to compensate for voltage drop to the beacon shall be installed in a suitable weatherproof housing under or on the tower platform or at the base of the tower. The installation shall be as indicated in the plans and described in the proposal. If the booster transformer is required for installation in the transformer vault, it shall be installed in accordance with and paid for as described in Item L-109, Installation of Airport Transformer Vault and Vault Equipment.

101-3.11 PHOTOELECTRIC CONTROL. If shown in the plans or specified in job specifications, the Contractor shall furnish and install an automatic control switch at the location indicated in the plans. The switch shall be a photoelectric type. It shall be a standard commercially available unit suitable for aviation service. It shall be installed, connected, and adjusted in accordance with the manufacturer's instructions.

101-3.12 OBSTRUCTION LIGHTS. Unless otherwise specified, the Contractor shall install on the top of the beacon tower or mounting platform two L-810 obstruction lights on opposite corners. These lights shall be mounted on conduit extensions to a height of not less than 4 inches (100 mm) above the top of the beacon. They shall be connected in series into the tell-tale circuit with the necessary relay and wiring connections.

101-3.13 PAINTING. If construction of a wooden mounting platform is stipulated in the proposal as part of this item, all wooden parts of the platform shall be given one priming coat of white or aviation-orange paint after fabrication but before erection and one body and one finish coat of aviation-orange paint after erection. Steel mounting platforms shall be given one priming coat of red lead before erection and one body and one finish coat of aviation-orange paint after erection. All equipment installed under this contract and exposed to the weather shall be given one body and one finish coat of aviation-orange or white paint as required. This shall include beacon (except glass surfaces), beacon base, breaker cabinet, all conduit, and transformer cases. It shall not include lightning rods or obstruction light globes.

The paint shall be applied uniformly in the proper consistency by skilled painters. The finished paint shall be free from sags, holidays, and smears. Each coat of paint shall be given ample time to dry and harden before the next coat of paint is applied. A minimum of 3 days shall be allowed for drying on wood surfaces, and a minimum of 4 days shall be allowed for drying on metal surfaces. Painting shall not be done in cold, damp, foggy, dusty, or frosty atmospheres, or when air temperature is below 40° F (4° C), nor started when the weather forecast indicates such conditions for the day.

All surfaces shall be cleaned before painting. The surfaces shall be dry and free from scale, grease, rust, dust, and dirt when paint is applied. All knots in wood surfaces shall be covered with shellac immediately before applying the priming coat of paint. Nail holes and permissible imperfections shall be filled with putty.

The ready-mixed paint shall be thinned for the priming and body coats in accordance with the manufacturer's recommendations. In the absence of such recommendations, the following shall apply:

a. Body coats (for both wood and steel surfaces) - add 1/2 pint (0.06 liter) of turpentine to each gallon (liter) of ready-mixed paint for body coats.

b. Finish coats (for both wood and steel surfaces) - the ready-mixed paint shall be used as it comes from the container for finish coats.

101-3.14 TESTING. The installation shall be fully tested in operation as a completed unit prior to acceptance. These tests shall include operation of the lamp-changer operation and taking megger and voltage readings. The insulation resistance to ground of the beacon supply circuit shall be not less than 50 megohms

when measured ungrounded. Testing equipment shall be furnished by the Contractor. Tests shall be conducted in the presence of the Engineer and shall be to his/her satisfaction.

METHOD OF MEASUREMENT

101-4.1 The quantity to be paid for shall be the number of beacons installed as completed units in place, accepted, and ready for operation.

BASIS OF PAYMENT

101-5.1 Payment will be made at the contract unit price for each completed and accepted job. This price shall be full compensation for furnishing all materials and for all preparation, assembly, and installation of these materials, and for all labor, equipment, tools, and incidentals necessary to complete this item.

Payment will be made under:

Item L-101-5.1	Airport Rotating Beacon, in place—per unit

MATERIAL REQUIREMENTS

Fed.Spec.J-C-30	Cable and Wire, Electrical (Power, Fixed Installation)
Fed.Spec.TT-P-59	Paint. Ready-mixed, International Orange
Fed.Spec.TT-P-641	Primer, Paint; Zinc Dust-zinc Oxide
Fed.Spec.TT-P-102	Paint, Oil: Titanium-Lead-Zinc and Oil, Exterior, Ready-mixed, White and Light Tints
Fed.Spec.W-P-115	Panel, Power Distribution
Fed. Std. 595	Colors
AC 150/5345-7	Specification for L-824 Underground Cable for Airport Lighting Circuits
AC 150/5345-12	Specification for Airport and Heliport Beacons
ASTM D 83	Red Lead Pigment
Underwriters Laboratories Standard 6	Rigid Metal Conduit
Underwriters Laboratories Standard 514	Fittings for Conduit and Outlet Boxes
Underwriters Laboratories Standard 1242	Intermediate Metal Conduit

ITEM L-102 INSTALLATION OF HAZARD BEACON

DESCRIPTION

102-1.1 This item shall consist of furnishing and installing a hazard flashing beacon in accordance with these specifications. This work shall include the mounting, leveling, wiring, servicing, painting, and testing of the beacon and all materials and incidentals necessary to place it in operating condition as a completed unit to the satisfaction of the Engineer. This item shall include a mounting platform if specified in the plans.

EQUIPMENT AND MATERIALS

102-2.1 GENERAL.

a. Airport lighting equipment and materials covered by Federal Aviation Administration (FAA) specifications shall have the prior approval of the FAA, and are listed in Advisory Circular (AC) 150/5345-1, Approved Airport Equipment.

b. All other equipment and materials covered by other referenced specifications shall be subject to acceptance through manufacturer's certification of compliance with the applicable specification, when requested by the Engineer.

102-2.2 BEACON. The beacon shall conform to the requirements of AC 150/5345-43, Specification for Obstruction Lighting Equipment.

102-2.3 PANEL BOARDS AND BREAKERS. Panel boards and breakers shall conform to the requirements of Fed. Spec. W-P-115.

102-2.4 WEATHERPROOF CABINETS. Weatherproof cabinets shall conform to National Electrical Manufacturers Association Standards and shall be constructed of steel not less than No. 16 USS gauge.

102-2.5 WIRE. Wire in conduit rated up to 5,000 volts shall conform to AC 150/5345-7, Specification for L-824 Underground Electrical Cable for Airport Lighting Circuits for Rubber Insulated Neoprene Covered Wire, or Fed. Spec. J-C-30, Type RHW, for rubber insulated fibrous covered wire. For ratings up to 600 volts, thermoplastic wire conforming to Fed. Spec. J-C-30, Types TW, THW, and THWN shall be used. The wires shall be of the type, size, number of conductors, and voltage shown in the plans or in the proposal.

102-2.6 CONDUIT. Rigid steel conduit and fittings shall conform to the requirements of Underwriters Laboratories Standard 6, 514, and 1242.

102-2.7 PAINT.

a. Red lead priming paint for ungalvanized metal surfaces and the mixing thereof shall conform to the 97% grade in ASTM D 83. The red lead shall be furnished in paste form and delivered to the job in the original unbroken packages bearing the maker's name and brand.

b. Priming paint for galvanized metal surfaces shall be zinc dust-zinc oxide primer paint, conforming to Fed. Spec. TT-P-641. If necessary, add not more than 1/2 pint (0.06 liters) of turpentine to each gallon (liter).

c. Orange paint for the body and the finish coats on metal and wood surfaces shall consist of a ready-mixed non-fading paint meeting the requirements of Fed. Spec. TT-P-59. The color shall be in accordance with Federal Standards 595, Aviation Gloss Orange Number 12197.

d. White paint for body and finish coats on metal and wood surfaces shall be ready-mixed paint conforming to Fed. Spec. TT-P-102.

e. Priming paint for wood surfaces shall be mixed on the job by thinning the above specified orange or white paint by adding 1/2 pint (0.06 liters) of raw linseed oil to each gallon (liter).

102-2.8 FLASHER. The beacon flasher shall be a standard commercially available unit designed for the service intended. The mechanism in the flasher shall be designed to flash not more than 40 and not less than 12 flashes per minute. The flashing switch shall be of the mercury contact-type encapsulated in nonbreakable plastic. The entire unit shall be housed in a weatherproof cabinet.

CONSTRUCTION METHODS

102-3.1 PLACING THE BEACON. The beacon shall be mounted on a beacon tower, platform, building roof, or on a pole as shown in the plans.

102-3.2 MOUNTING AND LEVELING. The support to which the beacon is fastened shall be accurately leveled before mounting the beacon.

102-3.3 FLASHER. If shown in plans or specified in job specifications, a separate flashing mechanism for the beacon shall be installed adjacent or near the beacon. The mechanism in this flasher shall be designed to flash not more than 40 and not less than 12 flashes per minute.

102-3.4 MOUNTING PLATFORM. If shown in plans or specified in job specifications, the Contractor shall construct a special mounting platform for the beacon, flasher, and incidental equipment. Design and materials for the special platform shall be as shown in the plans. This mounting platform may be constructed on top of a steel beacon tower, or wood pole if specified, and shall be as shown in the plans.

102-3.5 WIRING. The Contractor shall furnish all necessary labor and materials and shall make complete above-ground electrical connections in accordance with the wiring diagram furnished with the project plans.

If underground cable for the power feed from the transformer vault to the beacon site and duct for the installation of this cable under paved areas is required, the cable and duct shall be installed in accordance with and paid for by linear foot measurement as described in Item L-108, Installation of Underground Cable for Airports, and Item L-110, Installation of Airport Underground Electrical Duct.

If lightning protection is specified in the plans or proposals as a part of this item, it shall be in accordance with Item L-103, Installation of Airport Beacon Towers, paragraphs 103-2.3, 103-2.4, 103-2.5, 103-2.6, and 103-3.4.

102-3.6 PANEL AND CABINET. If shown in plans or specified in job specifications, the Contractor shall furnish and install a circuit breaker panel. The panel shall be of the type and rating indicated in the plans, and it shall be mounted in a weatherproof cabinet. The cabinet shall be located near the beacon or as directed by the Engineer.

102-3.7 CONDUIT. All exposed wiring shall be run in not less than 1/2 inch (12 mm) galvanized rigid steel conduit. No conduit shall be installed on top of a beacon platform floor. All conduit shall be installed to provide for drainage. If mounted on a steel beacon tower, the conduit shall be fastened to the tower members with "wraplock" straps, clamps, or approved fasteners spaced approximately 5 feet (150 cm) apart. Conduit shall be attached to wooden structures with galvanized pipe straps and fastened with galvanized wood screws not less than No. 8 nor less than 1-1/4 inches (31 mm) long. There shall be at least two fastenings for each 10-foot (3 m) length.

102-3.8 BOOSTER TRANSFORMERS. If shown in plans or specified in job specifications, a booster transformer to compensate for voltage drop to the beacon shall be installed in a suitable weatherproof housing under or on the tower platform or at the base of the tower or pole. The installation shall be as indicated in the plans and described in the proposal. If the booster transformer is required for installation in the transformer vault, it shall be installed in accordance with and paid for as described in Item L-109, Installation of Airport Transformer Vault and Vault Equipment.

102-3.9 PHOTOELECTRIC CONTROL. If shown in plans or specified in job specifications, the Contractor shall furnish and install an automatic control switch at the location indicated in the plans. This switch shall be a photoelectric type. It shall be a standard commercially available unit suitable for aviation service. It shall be installed, connected, and adjusted in accordance with the manufacturer's instruction.

102-3.10 PAINTING. Wood poles and wooden parts of mounting platforms shall be given one priming coat of white or aviation-orange paint after fabrication but before erection and one body and one finish coat of aviation-orange paint after erection. Steel mounting platforms shall be given one priming coat of red lead before erection and one body and one finish coat of aviation-orange paint after erection. All equipment under this contract and exposed to the weather shall be given one body and one finish coat of aviation-orange or white paint as required. This shall include beacon (except glass surfaces), breaker cabinet, and all conduit and transformer cases. It shall not include lightning rods.

The paint shall be applied uniformly in the proper consistency by skilled painters. The finished paint shall be free from sags, holidays, and smears. Each coat of paint shall be given ample time to dry and harden before the next coat of paint is applied. A minimum of 3 days shall be allowed for drying on wood surfaces and a minimum of 4 days shall be allowed for drying on metal surfaces. Painting shall not be done in cold, damp, foggy, dusty, or frosty atmospheres, or when air temperature is below 40° F (4° C), nor started when the weather forecast indicates such conditions for the day.

All surfaces shall be cleaned before painting. The surfaces shall be dry and free from scale, grease, rust, dust, and dirt when paint is applied. All knots in wood surfaces shall be covered with shellac immediately before applying the priming coat of paint. Nail holes and permissible imperfections shall be filled with putty.

The ready-mixed paint shall be thinned for the priming and body coats in accordance with the manufacturer's recommendations. In the absence of such recommendations, the following shall apply:

a. Body coats (for both wood and steel surfaces) - add 1/2 pint (0.06 liters) of turpentine to each gallon (liter) of ready-mixed paint for body coats.

b. Finish coats (for both wood and steel surfaces) - the ready-mixed paint shall be used as it comes from the container for finish coats.

102-3.11 TESTING. The installation shall be tested in operation as a completed unit prior to acceptance. Tests shall include taking megger and voltage readings. Testing equipment shall be furnished by the Contractor. The insulation resistance to ground of the beacon supply circuit shall be not less than 50 megohms when measured ungrounded.

Tests shall be conducted in the presence of the Engineer and shall be to his/her satisfaction.

METHOD OF MEASUREMENT

102-4.1 The quantity to be paid for shall be the number of beacons installed as completed units in place, accepted, and ready for operation.

BASIS OF PAYMENT

102-5.1 Payment will be made at the contract unit price for each completed and accepted job. This price shall be full compensation for furnishing all materials and for all preparation, assembly, and installation of these materials, and for all labor, equipment, tools, and incidentals necessary to complete this item.

Payment will be made under:

Item L-102-5.1	Hazard Beacon, in place--per unit

MATERIAL REQUIREMENTS

Fed.Spec.J-C-30	Cable and Wire, Electrical (Power, Fixed Installation)
Fed.Spec.TT-P-59	Paint: Ready-mixed, International Orange
Fed.Spec.TT-P-641	Primer, Paint; Zinc Dust-Zinc Oxide
Fed.Spec.TT-P-102	Paint, Oil: Titanium-Lead-Zinc and Oil, Exterior, Ready-mixed, White and Light Tints
Fed.Spec.W-P-115	Panel, Power Distribution
Fed. Std. 595	Colors
AC 150/5345-7	Specification For L-824 for Underground Electrical Cable for Airport Lighting Circuits
AC 150/5345-43	Specification for Obstruction Lighting Equipment
Underwriters Laboratories Standard 6	Rigid Metal Conduit
Underwriters Laboratories Standard 514	Fittings for Conduit and Outlet Boxes
Underwriters Laboratories Standard 1242	Intermediate Metal Conduit

ITEM L-103 INSTALLATION OF AIRPORT BEACON TOWERS

DESCRIPTION

103-1.1 This item shall consist of furnishing and installing an airport beacon tower of the type shown in the plans, in accordance with these specifications. This work shall include the clearing of the site, erection of the tower, installation of lightning protection, painting, and all incidentals necessary to place it in operating condition as a completed unit to the satisfaction of the Engineer.

EQUIPMENT AND MATERIALS

103-2.1 GENERAL. All equipment and materials covered by referenced specifications shall be subject to acceptance through manufacturer's certification of compliance with the applicable specification when requested by the Engineer.

103-2.2 TOWER. The beacon tower shall conform to the requirements of Advisory Circular (AC) 150/5340-21, Airport Miscellaneous Lighting Visual Aids, Section 3.

103-2.3 LIGHTNING ROD. The lightning rod shall consist of a galvanized steel, copper, or copper-clad rod with the upper end drawn to a point and of sufficient length to extend from the point of fastening to not less than 6 inches (150 mm) above the top of the beacon.

103-2.4 DOWN CONDUCTOR. The down conductor cable for lightning protection shall consist of No. 8 AWG or larger bare stranded copper wire.

103-2.5 GROUND ROD. The ground rod shall be of the diameter and length specified in the plans. It shall be copper or copper clad.

103-2.6 GROUND CLAMP. Ground clamp shall be similar and equal to the Type GR as manufactured by the Burndy Engineering Company.

103-2.7 PAINT.

a. Priming paint for galvanized steel towers shall be zinc dust-zinc oxide primer paint conforming to Fed. Spec. TT-P-641. If necessary, add not more than 1/2 pint (0.06 liter) of turpentine to each gallon (liter).

b. Priming paint for steel towers, not galvanized, shall be red lead, and the mixing thereof shall conform to the 97% grade specified in ASTM D 83. The red lead shall be furnished in paste form and delivered to the job in the original unbroken packages bearing the marker's name and brand.

c. Orange paint for the body and finished coats on metal and wood surfaces shall consist of a ready-mixed nonfading paint meeting the requirements of Fed. Spec. TT-P-59. The color shall be in accordance with Federal Standard 595, Aviation Gloss Orange Number 12197.

d. White paint for steel tower shall be ready-mixed paint conforming to Fed. Spec. TT-P-102.

CONSTRUCTION METHODS

103-3.1 CLEARING AND GRADING. The site on which the beacon tower is to be erected shall be cleared and leveled. All trees and brush shall be removed from the area within a distance of 25 feet (7.5 m) from the tower or as called for in the job plans. Stumps shall be removed to a depth of 18 inches (45 cm) below finished grade and the excavation filled with earth and tamped. If a transformer vault or other structure is included as part of the installation, the area shall be cleared to a distance of 25 feet (7.5 m) from these structures. The ground near the tower shall be leveled to permit the operation of mowing machines. The leveling shall extend at least 2 feet (60 cm) outside the tower legs. All debris removed from the tower site shall be disposed of by the Contractor to the satisfaction of the Engineer and in accordance with Federal, state, or local regulations.

103-3.2 EXCAVATION AND FILL. Excavation for the tower footings shall be carried to a minimum of 4 inches (100 mm) below the footing depth. The excess excavation below the footing depth shall then be backfilled with gravel or crushed stone and compacted to the required level. The footing plates shall be installed, and a thickness of not less than 18 inches (45 cm) of the same gravel or crushed stone shall be placed immediately above the footing plates in layers of not over 6 inches (150 mm) . Each layer above the footing plates shall be thoroughly tamped in place. The remainder of the backfill may be of excavated earth placed in layers not to exceed 6 inches (150 mm). Each layer shall be thoroughly compacted by tamping.

Where solid rock is encountered, which prevents the carrying of the foundation legs to the required depth but which is of sufficient strength to use holddown bolts, the tower anchor posts shall be cut off at the required length and the holddown bolts shall be installed as indicated in the plans with the approval of the Engineer. Each tower leg shall be anchored to the rock by means of two 7/8-inch (21 mm) diameter by 3-foot (90 cm) long expansion or split bolts and shall be grouted with neat portland cement into holes drilled into the natural rock. Except as required for rock foundations, the footing members shall not be cut off or shortened. If excavated material is of such character that it will not readily compact when backfilled, the Engineer may order the excavation backfilled with concrete or other suitable material.

The concrete footing for tubular beacon towers shall be installed in accordance with the manufacturer's recommendations. Portions of the footing in the topsoil layer shall not be included in the footing height.

103-3.3 ERECTION. Detail erection drawings furnished by the manufacturer shall be strictly followed during construction. All towers shall be erected in sections from the ground up unless otherwise specified. In final assembly, all bolts and fastenings shall be installed, and the structure shall be plumb, true, square, and level. Nuts shall be taken up to a firm bearing after which the bolts shall, if necessary, be cut to proper length to protrude three full threads. Approved locknuts shall be placed on each bolt over the regular nut. Ladder bolts shall be inserted with the head to the outer face of the tower. Diagonal, leg, and handrail bolts shall be installed with nuts on the outer face of the tower, unless otherwise specified. Bent parts shall be straightened before erection without damage to the protective coating. Surfaces abraded or bared of protective coating shall be painted with the proper priming paint as specified in these specifications.

The Contractor shall install the ladder on the side of the tower adjacent to the driveway or most accessible approach to the tower. Tubular beacon towers shall be erected in accordance with the manufacturer's recommendations. The safety cable shall be located on the side of the tower adjacent to the driveway or most accessible approach to the tower.

103-3.4 LIGHTNING PROTECTION. The Contractor shall furnish and install a lightning rod, down conductor, and at least one ground plate or rod for each beacon tower. The lightning rod shall be installed at the top of the tower with the tip of the rod extending not less than 6 inches (150 mm) above the top of the beacon.

Down-conductor cables shall be securely fastened to the surface of the tower leg at 5-foot (150 cm) intervals with suitable bronze fasteners having bronze or noncorrosive metal bolts. Sharp turns or bends in the down conductor will not be permitted.

All connections of cable to cable, cable to lightning rods, and cable to ground plates or rods shall be made with approved type solderless connectors or noncorrosive metal and shall be of substantial construction.

The down-conductor cable shall be securely attached to ground rods or plates placed at least 2 feet (60 cm) away from the tower foundations. The ground rod shall be driven into the ground so that the top is at least 6 inches (150 mm) below grade. The down-conductor shall be firmly attached to the ground plate or rod by means of a ground connector or clamp. Plates shall be embedded in the area of permanent moisture.

The complete lightning protection installation shall be accomplished to the satisfaction of the Engineer. The resistance to ground of any part of the lightning protection system shall not exceed 25 ohms.

103-3.5 PAINTING. The Contractor shall furnish all materials and labor for painting the beacon tower. The color scheme for the steel tower shall be as shown in the plans.

a. Parts to be Painted. Tower parts (except those parts to be exposed to earth) shall not be treated or primed before erection. All tower parts placed below ground level or within 12 inches (300 mm) above ground level shall be given two coats of approved bituminous paint.

The paint shall be applied uniformly in the proper consistency by skilled painters. The finished paint shall be free from sags, holidays, and smears. Division lines between colors shall be sharply defined. Each coat of paint shall be given ample time to dry and harden before the next coat is applied. A minimum of 4 days shall be allowed for drying on metal surfaces. Painting shall not be done in cold, damp, foggy, dusty, or frosty atmospheres, or when air temperature is below 40° F (4° C), nor started when the weather forecast indicates such conditions for the day.

All surfaces shall be cleaned before painting. The surfaces shall be dry and free from scale, grease, rust, dust, and dirt when paint is applied.

The number of coats of paint applied shall be in accordance with the following instructions:

b. Steel Towers, Galvanized. One priming coat of zinc dust-zinc oxide primer after erection and one body and one finish of white or orange paint (as required by the color scheme) applied after erection.

c. Steel Towers, Not Galvanized. One priming coat of red lead priming paint and one body and one finish coat of white or orange paint (as required by the color scheme) applied after erection.

The above specified orange and white ready-mixed paints shall be thinned for the body coats in accordance with the manufacturer's recommendations. In the absence of such recommendations, the following shall apply:

d. Body Coats. Add not more than 1/2 pint (0.06 liters) of turpentine to each gallon (liter) of ready-mixed paint for body coats.

e. Finish Coats. The ready-mixed paint shall be used as it comes from the container for finish coats.

METHOD OF MEASUREMENT

103-4.1 The quantity to be paid for under this item shall be the number of airport beacon towers installed as completed units in place, accepted, and ready for operation.

BASIS OF PAYMENT

103-5.1 Payment will be made at the contract unit price for each completed and accepted job. This price shall be full compensation for furnishing all materials and for all preparation, assembly, and installation of these materials, and for all labor, equipment, tools, and incidentals necessary to complete this item.

Payment will be made under:

Item L-103-5.1	Beacon Tower, in place--per unit

MATERIAL REQUIREMENTS

Fed.Spec.TT-P-59	Paint; Ready-mixed International Orange
Fed.Spec.TT-P-102	Paint, Oil: Titanium-Lead-Zinc and Oil, Exterior, Ready-mixed, White and Light Tints
Fed.Spec.TT-P-641	Primer Coating; Zinc Dust-Zinc Oxide (for galvanized surfaces)
Fed. Std. 595	Colors
AC 150/5340-21	Airport Miscellaneous Lighting Visual Aids
ASTM D 83	Red Lead Pigment

ITEM L-107 INSTALLATION OF AIRPORT 8-FOOT AND 12-FOOT WIND CONES

DESCRIPTION

107-1.1 This item shall consist of furnishing and installing an airport wind cone in accordance with these specifications and in accordance with the dimensions, design, and details shown in the plans.

The work shall include the furnishing and installation of a support for mounting the wind cone, the specified wire, and a concrete foundation. The item shall also include all cable connections, conduit and conduit fittings, the furnishing and installation of all lamps, ground rod and ground connection, the testing of the installation, and all incidentals necessary to place the wind cone in operation as a completed unit to the satisfaction of the Engineer.

EQUIPMENT AND MATERIALS

107-2.1 GENERAL.

a. Airport lighting equipment and materials covered by Federal Aviation Administration (FAA) specifications shall have the prior approval of the FAA, and are listed in Advisory Circular (AC) 150/5345-1, Approved Airport Equipment.

b. All other equipment and materials covered by other referenced specifications shall be subject to acceptance through manufacturer's certification of compliance with the applicable specification when requested by the Engineer.

107-2.2 WIND CONES. The 8-foot (240 cm) and 12-foot (3.5 m) wind cones and assemblies shall conform to the requirements of AC 150/5345-27, Specification for Wind Cone Assemblies.

107-2.3 WIRE. Wire in conduit rated up to 5,000 volts shall conform to AC 150/5345-7, Specification for L-824 Underground Cable for Airport Lighting Circuits, for rubber insulated neoprene covered wire, of Fed. Spec. J-C-30, Type RHW, for rubber insulated fibrous covered wire. For ratings up to 600 volts, thermoplastic wire conforming to Fed. Spec. J-C-30, Types TW, THW, and THWN, shall be used. The wires shall be of the type, size, number of conductors, and voltage shown in the plans or in the proposal.

107-2.4 CONDUIT. Rigid steel conduit and fittings shall conform to the requirements of Underwriters Laboratories Standard 6, 514, and 1242.

107-2.5 CONCRETE. The concrete for foundations shall be proportioned, placed, and cured in accordance with Item P-610, Structural Portland Cement Concrete.

107-2.6 PAINT.

a. Red lead priming paint for ungalvanized metal surfaces, and the mixing thereof, shall conform to the 97% grade specified in ASTM D 83. The red lead shall be furnished in paste form and delivered to the job in the original unbroken packages bearing the maker's name and brand designation.

b. Priming paint for galvanized metal surfaces shall be zinc dust-zinc oxide primer paint conforming to Fed. Spec. TT-P-641. If necessary, add not more than 1/2 pint (0.06 liter) of turpentine to each gallon (liter).

c. Orange paint for the body and the finish coats on metal and wood surfaces shall consist of a ready-mixed nonfading paint meeting the requirements of Fed. Spec. TT-P-59. The color shall be in accordance with Federal Standards 595, Aviation Gloss Orange Number 12197.

d. White paint for body and finish coats on metal and wood surfaces shall be ready-mixed paint conforming to Fed. Spec. TT-P-102.

e. Priming paint for wood surfaces shall be mixed on the job by thinning the above specified aviation-orange or white paint by adding 1/2 pint (0.06 liter) of raw linseed oil to each gallon (liter).

CONSTRUCTION METHODS

107-3.1 INSTALLATION. The hinged support or hinged pole shall be installed on a concrete foundation as shown in the plans.

107-3.2 COUNTERWEIGHT. The Contractor shall furnish and install a counterweight on the hinged support for the 12-foot (3.5 m) wind cone. The counterweight may consist of lead weights which may be furnished with the "A" frame assembly or it may consist of concrete poured around the bottom of the hinged support. Where concrete is used, the counterweight shall be approximately 12 inches (300 mm) wide by 24 inches (600 mm) deep and should weigh approximately 500 pounds (230 kg). The counterweight should be 25 to 50 pounds (10 to 20 kg) less than the weight needed to balance the assembly. The counter-balancing should operate to the satisfaction of the Engineer.

107-3.2 ELECTRICAL CONNECTION. The Contractor shall furnish all labor and materials and shall make complete electrical connections in accordance with the wiring diagram furnished with the project plans.

If underground cable from the transformer vault to the wind cone site and duct for this cable installation under paved areas is required, the cable and duct shall be installed in accordance with and paid for by linear foot measurement as described in Item L-108, Installation of Underground Cables for Airports, and Item L-110, Installation of Airport Underground Electrical Duct.

107-3.4 BOOSTER TRANSFORMER. If shown in plans or specified in job specifications, a booster transformer to compensate for voltage drop to the lamps shall be installed in a suitable weatherproof housing. The booster transformer shall be installed as indicated in the plans and described in the proposal. If the booster transformer is required for installation in the transformer vault, it shall be installed in accordance with and paid for as described in Item L-109, Installation of Airport Transformer Vault and Vault Equipment.

107-3.5 GROUND CONNECTION AND GROUND ROD. The Contractor shall furnish and install a ground rod, grounding cable, and ground clamps for grounding the "A" frame of the 12-foot (3.5 m) assembly or pipe support of the 8-foot (240 cm) support near the base. The ground rod shall be of the diameter and length specified in the plans and shall be copper or copper clad. The ground rod shall be driven into the ground adjacent to the concrete foundation so that the top is at least 6 inches (150 mm) below grade. The grounding cable shall consist of No. 8 AWG bare stranded copper wire or larger and shall be firmly attached to the ground rod by means of a ground connector or clamp. The other end of the grounding cable shall be securely attached to a leg of the "A" frame or to the base of the pipe support with noncorrosive metal and shall be of substantial construction. The resistance to ground shall not exceed 25 ohms.

107-3.6 PAINTING. Three coats of paint shall be applied (one prime, one body, and one finish) to all exposed material installed under this item except the fabric cone, obstruction light globe, and lamp reflectors. The wind cone assembly, if painted on receipt, shall be given one finish coat of paint in lieu of the three coats specified above. The paint shall meet the requirements of Fed. Spec. TT-P-59. The color shall be in accordance with Federal Standard 595, Aviation Gloss Orange Number 12197.

107-3.7 LAMPS. The Contractor shall furnish and install four 200-watt, 115-volt general lighting service lamps in the reflectors for the 12-foot (3.5 m) cone or four 150-watt, 115-volt lamps for the 8-foot (240 cm) cone. A clear 100-watt, 107-watt, or 116-watt, 115-volt traffic signal lamp with a medium screw base, or a 100-watt. A 21 bulb, 115 volt, medium prefocus base lamp shall be furnished and installed in the obstruction light as required.

107-3.8 CHAIN AND PADLOCK. The Contractor shall furnish and install a suitable operating chain for lowering and raising the hinged top section. The chain shall be attached to the= pole support in a manner to prevent the light fixture assembly from striking the ground in the lowered position.

A padlock shall also be furnished by the Contractor on the 8-foot (240 cm) wind cone for securing the hinged top section to the fixed lower section. keys for the padlock shall be delivered to the Engineer.

METHOD OF MEASUREMENT

107-4.1 The quantity to be paid for shall be the number of wind cones installed as completed units in place, accepted, and ready for operation.

BASIS OF PAYMENT

107-5.1 Payment will be made at the contract unit price for each completed and accepted job. This price shall be full compensation for furnishing all materials and for all preparation, assembly, and installation of these materials, and for all labor, equipment, tools, and incidentals necessary to complete this item.

Payment will be made under:

Item L-107-5.1	12-Foot (3.5 m) Wind Cone, in place--per unit
Item L-107-5.2	8-Foot (240 cm) Wind Cone, in place--per unit

MATERIAL REQUIREMENTS

Fed.Spec.J-C-30	Cable and Wire, Electrical (Power, Fixed Installation)
Fed.Spec.TT-P-59	Paint: Ready-mixed, International Orange
Fed.Spec.TT-P-641	Primer, Paint; Zinc Dust-Zinc Oxide
Fed.Spec.TT-P-102	Paint, Oil: Titanium-Lead-Zinc and Oil, Exterior, Ready-mixed, White and Light Tints
Fed.Spec.W-P-115	Panel, Power Distribution
Fed. Std. 595	Colors
ASTM D 83	Red Lead Pigment
AC 150/5345-7	Specification for L-824 Underground Cable for Airport Lighting Circuits
AC 150/5345-27	Specification for Wind Cone Assemblies
Underwriters Laboratories Standard 6	Rigid Metal Conduit
Underwriters Laboratories Standard 514	Fittings for Conduit and Outlet Boxes
Underwriters Laboratories Standard 1242	Intermediate Metal Conduit

ITEM L-108 INSTALLATION OF UNDERGROUND CABLE FOR AIRPORTS

DESCRIPTION

108-1.1 This item shall consist of furnishing and installing underground cable in accordance with these specifications at the locations shown in the plans. This item shall include the excavation and backfill of the trench and the installation of cable and counterpoise wire in trench, duct or conduit. It shall include splicing, cable marking, and testing of the installation and all incidentals necessary to place the cable in operating condition as a completed unit to the satisfaction of the Engineer. This item shall not include the installation of the duct or conduit.

EQUIPMENT AND MATERIALS

108-2.1 GENERAL.

a. Airport lighting equipment and materials covered by Federal Aviation Administration (FAA) specifications shall have the prior approval of the FAA, and are listed in Advisory Circular (AC) 150/5345-1, Approved Airport Equipment.

b. All other equipment and materials covered by other referenced specifications shall be subject to acceptance through manufacturer's certification of compliance with the applicable specification, when requested by the Engineer.

108-2.2 CABLE. Underground cable shall conform to the requirements of AC 150/5345-7, Specification for L-824 Underground Electrical Cable for Airport Lighting Circuits.

If telephone control cable is specified, copper shielded, polyethylene insulated and jacketed, No. 19 AWG telephone cable conforming to the United States Department of Agriculture, Rural Electrification Administration (REA) Bulletin 345-14, REA Specification for Fully Color-Coded, Polyethylene Insulated, Double Polyethylene-Jacketed Telephone Cables for Direct Burial, shall be used.

Where counterpoise conductors are to be installed and where soil conditions would adversely affect bare copper wire, thermoplastic wire conforming to Fed. Spec. J-C-30, Type TW, 600 volt, may be used.

Cable type, size, number of conductors, strand and service voltage shall be specified in the plans and/or proposal.

108-2.3 BARE COPPER WIRE (COUNTERPOISE). Bare copper wire for counter-poise installations shall be stranded wire conforming to ASTM Specifications B 3 and B 8.

108-2.4 CABLE CONNECTIONS. In-line connections of underground primary cables shall be of the type called for in the plans or in the proposal, and shall be one of the types listed below. When the plans or the proposal permit a choice of connection, the Contractor shall indicate in the bid the type of connection he proposes to furnish.

a. The Cast Splice. A cast splice, employing a plastic mold and using epoxy resin equal to that manufactured by Minnesota Mining and Manufacturing Company, "Scotchcast" Kit No. 82--A, or as manufactured by Hysol Corporation, "Hyseal Epoxy Splice" Kit No. E1135, for potting the splice is approved. This means of splicing is the only type approved for telephone control cable.

b. The Vulcanized Splice. A vulcanized splice employing Joy Manufacturing Company's Vulcanizing Kit No. X-1604-8 or equal is approved for field vulcanized splices. The proper molds for various cable sizes shall be used.

c. The Field-attached Plug-in Splice. Figure 3 of AC 150/5345-26, Specification for L-823 Plug and Receptacle, Cable Connectors, employing connector kits, is approved for field attachment to single conductor cable.

d. The Factory-Molded Plug-in Splice. Specification for L-823 Connectors, Factory-Molded to Individual Conductors, are approved.

e. The Taped Splice. Taped splices employing field-applied rubber, or synthetic rubber tape covered with plastic tape are approved. The rubber tape should meet the requirements of Mil. Spec. MIL-I-3825 and the plastic tape should comply with Mil. Spec. MIL-I-7798 or Fed. Spec. HH-I-595. In all the above cases, connections of cable conductors shall be made using crimp connectors utilizing a crimping tool designed. To make a complete crimp before the tool can be removed. No. 19 AWG telephone control wires may be connected by means of wrapped and soldered splice, 3M Company Moisture Proof UR Type Connector, or equal, or by a method approved by the Engineer.

108-2.5 CONCRETE. Concrete for cable markers shall conform to Specification Item P-610, "Structural Portland Cement Concrete."

CONSTRUCTION METHODS

108-3.1 GENERAL. The Contractor shall install the specified cable at the approximate locations indicated in the airport lighting layout plans. The Engineer shall indicate specific locations.

Cable connections between lights will be permitted only at the light locations for connecting the underground cable to the primary leads of the individual insulating transformers. The Contractor shall be responsible for providing cable in continuous lengths for home runs or other long cable runs without connections, unless otherwise authorized in writing by the Engineer or shown in the plans.

108-3.2 INSTALLATION IN DUCT OR CONDUIT. This item includes the installation of the cable in duct or conduit as described below. The maximum number and voltage ratings of cables installed in each single duct or conduit, and the current-carrying capacity of each cable shall be in accordance with the latest National Electric Code, or the code of the local agency having jurisdiction.

The Contractor shall make no connections or joints of any kind in cables installed in conduits or ducts.

The duct or conduit shall be installed as a separate item in accordance with Item L-110, "Installation of Airport Underground Electrical Duct." The Contractor shall make sure that the duct is open, continuous, and clear of debris before installing cable. The cable shall be installed in a manner to prevent harmful stretching of the conductor, injury to the insulation, or damage to the outer protective covering. The ends of all cables shall be sealed with moisture-seal tape before pulling into the conduit and it shall be left sealed until connections are made. Where more than one cable is to be installed in a duct under the same contract, all cable shall be pulled in the duct at the same time. The pulling of a cable through ducts or conduits may be accomplished by handwinch or power winch with the use of cable grips or pulling eyes. Pulling tensions should be governed by recommended standard practices for straight pulls or bends. A lubricant recommended for the type of cable being installed shall be used where pulling lubricant is required. Duct or conduit markers temporarily removed for excavations shall be replaced as required.

108-3.3 TRENCHING. Where turf is well established and the sod can be removed, it shall be carefully stripped and properly stored. Trenches for cables may be excavated manually or with mechanical trenching equipment. Walls of trenches shall be essentially vertical so that a minimum of shoulder surface is disturbed. Road patrols or graders shall not be used to excavate the trench with their blades. The bottom surface of trenches shall be essentially smooth and free from coarse aggregate. Unless otherwise specified, cable trenches shall be excavated to a minimum depth of 18 inches (45 cm) below finished grade, except as follows:

a. When off the airport or crossing under a roadway or driveway, the minimum depth shall be 36 inches (90 cm) unless otherwise specified.

b. Minimum cable depth when crossing under a railroad track, shall be 42 inches (105 cm) unless otherwise specified.

The Contractor shall excavate all cable trenches to a width not less than 6 inches (150 mm). The trench shall be widened where more than two cables are to be installed parallel in the same trench. Unless other-

wise specified in the plans, all cables in the same location and running in the same general direction shall be installed in the same trench.

When rock excavation is encountered, the rock shall be removed to a depth of at least 3 inches (75 mm) below the required cable depth and it shall be replaced with bedding material of earth or sand containing no mineral aggregate particles that would be retained on a 1/4-inch (6 mm) sieve. The Contractor shall ascertain the type of soil or rock to be excavated before bidding. All excavation shall be unclassified.

108-3.4 INSTALLATION IN TRENCHES. The Contractor shall not use a cable plow for installing the cable. Mechanical cable-laying equipment may be used in conjunction with a trenching machine if specified on project plans and specifications; and it should provide for physical inspection of cable prior to backfilling. Sharp bends or kinks in the cable shall not be permitted.

Cables shall be unreeled in place alongside or in the trench and shall be carefully placed along the bottom of the trench. The cable shall not be unreeled and pulled into the trench from one end.

Where two or more cables are laid parallel in the same trench, they shall be placed laterally a minimum distance of 3 inches (75 mm) apart, and the trench shall be widened sufficiently to accomplish this.

Cables crossing over each other shall have a minimum of 3-inch (75 mm) vertical displacement with the topmost cable depth at or below the minimum required depth below finished grade.

Not less than 1 foot (30 cm) of cable slack shall be left on each side of all connections, insulating transformers, light units, and at all other points where cable is connected to field equipment. The slack cable shall be placed in the trench in a series of S curves. Additional slack cable shall be left in runway light bases, handholes, manholes, etc., where it is required to bring the cable above ground level to make connections. The amount of slack cable shall be stipulated by the Engineer, or as shown in the plans and specifications.

108-3.5 BACKFILLING. After the cable has been installed, the trench shall be 3 inches (75 mm) deep, loose measurement, and shall be either earth or sand containing no mineral aggregate particles that would be retained on a 1/4-inch (6 m) sieve. This layer shall not be compacted. the second layer shall be 5 inches (125 mm) deep, loose measurement, and shall contain no particles that would be retained on a 1-inch (25.0 mm) sieve. The remainder of the backfill shall be excavated or imported mineral and shall not contain stone or aggregate larger than 4 inches (100 mm) maximum diameter. The third and subsequent layers of the backfill shall not exceed 8 inches (200 mm) in maximum depth, loose measurement.

The second, and subsequent layers shall be thoroughly tamped and compacted to at least the density of the adjacent undisturbed soil, and to the satisfaction of the Engineer. If necessary to obtain the desired compaction, the backfill material shall be moistened or aerated as required.

Trenches shall not be excessively wet and shall not contain pools of water during backfilling operations. The trench shall be completely backfilled and tamped level with the adjacent surface, except that when sod is to be placed over the trench, the backfilling shall be stopped at a depth equal to the thickness of the sod to be used, with proper allowance for settlement. Any excess excavated material shall be removed and disposed of in accordance with instructions issued by the Engineer.

108-3.6 RESTORATION. Where sod has been removed, it shall be replaced as soon as possible after the backfilling is completed. All areas disturbed by the trenching, storing of dirt, cable laying, pad construction, and other work shall be restored to its original condition. The restoration shall include any necessary topsoiling, fertilizing, liming, seeding, sodding, sprigging or mulching. All such work shall be performed in accordance with the FAA standard turfing specifications. the Contractor shall be held responsible for maintaining all disturbed surfaces and replacements until final acceptance.

108-3.7 CABLE MARKERS. The location of runway light circuits shall be marked by a concrete slab marker, 2 feet (60 cm) square and 4 inches (100 mm) thick, extending approximately 1 inch (25 mm) above the surface. Each cable run from the line of runway lights to the equipment vault shall also be marked at approximately every 200 feet (60 m) along the cable run, with an additional marker at each change of direction of cable run. All other cable buried directly in the earth shall be marked in the same manner. The Contractor shall not install slab markers where cable lies in straight lines between obstruction light poles which are spaced 300 feet (90 m) apart, or less. Cable markers shall be installed immediately above the cable. The Contractor shall impress the word "cable" and directional arrows on each cable marking slab.

The letters shall be approximately 4 inches (100 mm) high and 3 inches (75 mm) wide, with width of stroke 1/2 inch (12 mm) and 1/4 inch (6 mm) deep.

The location of each underground cable connection, except at lighting units or insulating transformers, shall be marked by a concrete marker slab placed above the connection. The Contractor shall impress the word "splice" on each slab. He also shall impress additional circuit identification symbols on each slab if so desired by the Engineer.

108-3.8 SPLICING. Connections of the type shown in the plans shall be made by experienced personnel regularly engaged in this type of work and shall be made as follows:

a. Cast Splices. These shall be made by using crimp connectors for jointing conductors. Molds shall be assembled, and the compound shall be mixed and poured in accordance with manufacturer's instructions and to the satisfaction of the Engineer.

b. Vulcanized Splices. These shall be made by using crimp connectors for joining conductors. The splice shall be made, using compounds furnished by the manufacturer, in accordance with his/her instructions and to the satisfaction of the Engineer.

c. Field-attached Plug-in Splices. These shall be assembled in accordance with manufacturer's instructions. These splices shall be made by plugging directly into mating connectors. In all cases the joint where the connectors come together shall be wrapped with at least one layer of rubber or synthetic rubber tape and one layer of plastic tape, one-half lapped, extending at least 1-1/2 inches (37 mm) on each side of the joint.

d. Factory-Molded Plug-in Splices. These shall be made by plugging directly into mating connectors. In all cases, the joint where the connectors come together shall be wrapped with at least one layer of rubber or synthetic rubber tape and one layer of plastic tape, one-half lapped, extending at least 1-1/2 inches (37 mm) on each side of the joint.

e. Taped Splices. A taped splice shall be made in the following manner:

Bring the cables to their final position and cut so that the conductors will butt. Remove insulation and jacket allowing for bare conductor of proper length to fit compression sleeve connector with 1/4 inch (6 mm) of bare conductor on each side of the connector. Use a sharp knife to pencil insulation and jacket at approximately the same angle as a pencil point. Care must be taken to avoid nicking or injuring the conductor during removal of insulation or penciling. Do not use emery paper on splicing operation since it contains metallic particles. The copper conductors shall be thoroughly cleaned. Join the conductors by inserting them equidistant into the compression connection sleeve. Crimp conductors firmly in place with crimping tool that requires a complete crimp before tool can be removed. Test the crimped connection by pulling on the cable. Scrape the insulation to assure that the entire surface over which the tape will be applied (plus 3 inches (75 mm) on each end) is clean. After scraping wipe the entire area with a clean lint-free cloth. Do not use solvents.

Apply high-voltage rubber tape one-half lapped over bare conductor. This tape should be tensioned as recommended by the manufacturer. Voids in the connector area may be eliminated by highly elongating the tape stretching it just short of its breaking point. Throughout the rest of the splice less tension should be used. Always attempt to exactly half-lap to produce a uniform buildup. Continue buildup to 1-1/2 times cable diameter over the body of the splice with ends tapered a distance of approximately 1 inch (25 mm) over the original jacket. Cover rubber tape with two layers of vinyl pressure-sensitive tape one-half lapped. Do not use glyptol or lacquer over vinyl tape as they react as solvents to the tape. No further cable covering or splice boxes are required.

If shielded cable is to be spliced, prepare cable as for a regular taped splice, except that the neoprene jacket shall be removed a distance not less than 5 inches (125 mm) from the beginning of the penciled portion. Carefully unwrap the shielding tape from that portion where jacket has been removed and cut off so that it extends about 1 inch (25 mm) from end of the jacket. Proceed with the taped splice as described above and tape up to 1/4 inch (6 mm) from the shield on both ends. Build up rubber tape to a thickness equal to the insulation thickness or 5/16 inch (9 mm) over connector.

Next wrap one-half lapped layer of semi-conducting tape (Scotch No. 13 Semi-Conducting Tape, or equal) over splicing tape and 1/4 inch (6 mm) onto the shielding tape. Wrap a fine, flat shielding braid one-half lapped over the splice extending 1/2 inch (12 mm) onto the metallic shielding. Solder ends of braid to metallic shielding tape. A bonding wire, (Minimum No. 14 Stranded Copper) equal to the current carrying capacity of the metallic shield, should have the individual strands wrapped around the metallic shield at both ends of the splice. These strands should be tack soldered to the shield in several places. The cable sheath should be replaced by wrapping with two one-half lapped layers of vinyl tape extending 2 inches (50 mm) onto the cable jacket.

The above described splice is for a straight-through splice with continuity of shielding.

108-3.9 BARE COUNTERPOISE WIRE INSTALLATION AND GROUNDING FOR LIGHTNING PROTECTION. If shown in the plans or specified in job specifications, a stranded bare copper wire, No. 8 AWG minimum size, shall be installed for lightning protection of the underground cables. The bare counterpoise wire shall be installed in the same trench for the entire length of the insulated cables it is designed to protect, and shall be placed at a distance of approximately 4 inches (100 mm) from the insulated cable. The counterpoise wire shall be securely attached to each light fixture base, or mounting stake. The counterpoise wire shall also be securely attached to copper or copper-clad ground rods installed not more than 1,000 feet (300 m) apart around the entire circuit. The ground rods shall be of the length and diameter specified in the plans, but in no case shall they be less than 8-feet (240 cm) long nor less than 5/8 inch (15 mm) in diameter.

The counterpoise system shall terminate at the transformer vault or at the power source. It shall be securely attached to the vault or equipment grounding system. The connections shall be made as shown in the project plans and specifications.

108-3.10 TESTING. The Contractor shall furnish all necessary equipment and appliances for testing the underground cable circuits after installation. The Contractor shall test and demonstrate to the satisfaction of the Engineer the following:

a. That all lighting power and control circuits are continuous and free from short circuits.

b. That all circuits are free from unspecified grounds.

c. That the insulation resistance to ground of all nongrounded series circuits is not less than 50 megohms.

d. That the insulation resistance to ground of all nongrounded conductors of multiple circuits is not less than 50 megohms.

e. That all circuits are properly connected in accordance with applicable wiring diagrams.

f. That all circuits are operable. Tests shall be conducted that include operating each control not less than 10 times and the continuous operation of each lighting and power circuit for not less than 1/2 hour.

METHOD OF MEASUREMENT

108-4.1 Trenching shall be measured by the linear feet (meters) of trench, including the excavation, backfill, and reconditioning, completed, measured as excavated, and accepted as satisfactory.

When specified in the proposal, separate measurement shall be made for trenches of various specified widths.

108-4.2 Cable or counterpoise wire installed in trench shall be measured by the number of linear feet (meters) of cable or counterpoise wire installed in trenches, ready for operation, and accepted as satisfactory. Separate measurement shall be made for each cable or counterpoise wire installed in trench.

108-4.3 Cable or counterpoise wire installed in duct or conduit shall be measured by the number of linear feet (meters) measured in place, completed, ready for operation, and accepted as satisfactory.

Separate measurement shall be made for each cable or counterpoise wire installed in duct or conduit.

BASIS OF PAYMENT

108-5.1 Payment will be made at the contract unit price for trenching cable and bare counterpoise wire installed in trench or duct in place by the Contractor and accepted by the Engineer. This price shall be full compensation for furnishing all materials and for all preparation and installation of these materials, and for all labor, equipment, tools, and incidentals necessary to complete this item.

Payment will be made under:

Item L-108-5.1	Cable Trench--per linear foot (meter)
Item L-108-5.2	Underground Cable, installed in trench--per liner foot (meter)
Item L-108-5.3	Underground Cable, installed in duct or conduit--per linear foot (meter)
Item L-108-5.4	Bare Counterpoise Wire, installed in trench, including ground rods and ground connectors--per linear foot (meter)
Item L-108-5.5	Bare Counterpoise Wire, installed in duct--per linear foot (meter)

MATERIAL REQUIREMENTS

AC 150/5345-7	Specification for L-824 Underground Electrical Cable for Airport Lighting Circuits
AC 150/5345-26	Specification for L-823 Plug and Receptacle Cable Connectors
Fed.Spec.J-C-30	Cable and Wire, Electrical Power, Fixed Installation
HH-I-595	Insulation Tape, Electrical, Pressure-Sensitive Adhesive, Plastic, for Low-Temperature Application
ASTM B 3	Soft or Annealed Copper Wire
ASTM B 8	Concentric-Lay-Stranded Cooper Conductor, Hard, Medium-Hard, or Soft
MIL-I-3825	Insulation Tape, Electrical, Self-Fusing, For Use in Electronics, Communications, and Allied Equipment
MIL-I-7798	Insulation Tape, Electrical, Pressure-Sensitive Adhesive, Plastic

ITEM L-109 INSTALLATION OF AIRPORT TRANSFORMER VAULT AND VAULT EQUIPMENT

DESCRIPTION

109-1.1 This item shall consist of constructing an airport transformer vault or a prefabricated metal housing these specifications in accordance with the design and dimensions shown in the plans. This work shall also include the installation of conduits in floor and foundation, painting and lighting of the vault or metal housing, and the furnishing of all incidentals necessary to produce a completed unit. Included as a separate part under this item or as a separate item where an existing vault is to be utilized shall be the furnishing of all vault equipment, wiring, electrical buses, cable, conduit, potheads, and grounding systems. This work shall also include the painting of equipment and conduit; the marking and labeling of equipment and the labeling or tagging of wires; the testing of the installation; and the furnishing of all incidentals necessary to place it in operating condition as a completed unit to the satisfaction of the Engineer.

EQUIPMENT AND MATERIALS

109-2.1 GENERAL.

a. Airport lighting equipment and materials covered by Federal Aviation Administration (FAA) specifications shall have the prior approval of the FAA, and are listed in Advisory Circular (AC) 150/5345-1, Approved Airport Equipment.

b. All other equipment and materials covered by other referenced specifications shall be subject to acceptance through manufacturer's certification of compliance with the applicable specification when requested by the Engineer.

VAULT AND PREFABRICATED METAL HOUSING

109-2.2 CONCRETE. The concrete for the vault shall be proportioned, placed, and cured in accordance with Item P-610, Structural Portland Cement Concrete, using 3/4-inch (18 mm) maximum size coarse aggregate.

109-2.3 REINFORCING STEEL. Reinforcing steel bars shall be intermediate or structural grade deformed-type bars and shall meet the requirements of ASTM A 615.

109-2.4 BRICK. Brick shall conform to ASTM C 62, Grade SW.

109-2.5 ASBESTOS CEMENT DUCT. Asbestos cement duct and fittings shall be in accordance with Fed. Spec. W-C-571.

109-2.6 RIGID STEEL CONDUIT. Rigid steel conduit and fittings shall be in accordance with Underwriters Laboratories Standard 6 and 514.

109-2.7 LIGHTING. Vault or metal-housing light fixtures shall be of a vaporproof type.

109-2.8 OUTLETS. Convenience outlets shall be heavy-duty duplex units designed for industrial service.

109-2.9 SWITCHES. Vault or metal-housing light switches shall be single-pole switches.

109-2.10 PAINT.

a. Red lead priming paint for ungalvanized metal surfaces, and the mixing thereof, shall conform to the 97% grade specified in ASTM D 83. The red lead shall be furnished in paste form and delivered to the job in the original unbroken packages bearing the maker's name and brand.

b. White paint for body and finish coats on metal and wood surfaces shall be ready-mixed paint conforming to Fed. Spec. TT-P-102.

c. Priming paint for wood surfaces shall be mixed on the job by thinning the above specified white paint by adding 1/2 pint (0.06 liter) of raw linseed oil to each gallon (liter).

d. Paint for the floor, ceiling, and inside walls shall be in accordance with Fed. Spec. TT-E-487. Walls and ceiling shall be light gray and the floor shall be medium gray.

e. The roof coating shall be hot asphalt material in accordance with Fed. Spec. SS-A-694.

109-2.11 HIGH-VOLTAGE BUS. High-voltage bus shall be standard weight 3/8-inch (9 mm) IPS copper tubing or it may be insulated copper cable of the size and voltage rating specified.

109-2.12 BUS CONNECTORS. Connectors shall be similar to Burndy Type NT (or equal) for copper tubing. Connectors for insulated bus cable shall be of the proper size and type for the service intended.

109-2.13 BUS SUPPORTS. Bus supports shall be similar to Westinghouse No. 527892 (or equal), insulated for 7,500 volts, single clamp type for 2-bolt flat mounting.

109-2.14 GROUND BUS. Ground bus shall be 1/8- x 3/4-inch (3 x 18 mm) copper bus bar.

109-2.15 SQUARE DUCT. Duct shall be square similar to that manufactured by the Square D Company (or equal), or the Trumbull Electric Manufacturing Company (or equal). The entire front of the duct on each section shall consist of hinged or removable cover for ready access to the interior. The cross section of the duct shall be not less than 4 x 4 inches (100 x 100 mm) except where otherwise shown in the plans.

109-2.16 GROUND RODS. Ground rods shall be copper or copper-clad of the length and diameter specified in the plans.

109-2.17 POTHEADS. Potheads shall be similar to G&W Type N, Shape C (or equal), unless otherwise specified. Potheads shall be furnished with plain insulator bushings and conduit couplings. Potheads shall have a rating not less than the circuit voltage.

109-2.18 PREFABRICATED METAL HOUSING. The prefabricated metal housing shall be a commercially available unit.

109-2.19 FAA-APPROVED EQUIPMENT. Certain items of airport lighting equipment installed in vaults are covered by individual FAA equipment specifications. The specifications are listed below:

AC 150/5345-3	Specification for L-821 Panels for Remote Control of Airport Lighting
AC 150/5345-5	Circuit Selector Switch
AC 150/5345-7	Specification for L-824 Underground Electrical Cable for Airport Lighting Circuits
AC 150/5345-10	Specification for Constant Current Regulators and Regulator Monitors
AC 150/5345-13	Specification for L-841 Auxiliary Relay Cabinet Assembly for Pilot Control of Airport Lighting Circuits.

109-2.20 OTHER ELECTRICAL EQUIPMENT. Constant-current regulators, distribution transformers, oil switches, cutouts, relays, terminal blocks, transfer relays, circuit breakers, and all other regularly used commercial items of electrical equipment not covered by FAA equipment specifications shall conform to the applicable rulings and standards of the Institute of Electrical and Electronic Engineers or the National Electrical Manufacturers Association. When specified, test reports from a testing laboratory indicating that the equipment meets the specifications shall be supplied. In all cases, equipment shall be new and a first-grade product. This equipment shall be supplied in the quantities required for the specific project and shall incorporate the electrical and mechanical characteristics specified in the proposal and plans.

109-2.21 WIRE. Wire in conduit rated up to 5,000 volts shall conform to AC 150/5345-7, Specification for L-824 Underground Electrical Cables for Airport Lighting Circuits, for rubber insulated neoprene-covered wire, or Fed. Spec. J-C-30, Type RHW, for rubber insulated fibrous-covered wire. For ratings up to 600 volts, thermoplastic wire conforming to Fed. Spec. J-C-30, Types TW, THW, and THWN, shall be

used. The wires shall be of the type, size, number of conductors, and voltage shown in the plans or in the proposal.

a. Control Circuits. Wire shall be not less than No. 12 AWG and shall be insulated for 600 volts. If telephone control cable is specified, No. 19 AWG telephone cable conforming to the United States Department of Agriculture, Rural Electrification Administration (REA) Bulletin 345-14 shall be used.

b. Power Circuits.

(1) 600 volts maximum—Wire shall be No. 6 AWG or larger and insulated for at least 600 volts.

(2) 3,000 volts maximum—Wire shall be No. 6 AWG or larger and insulated for at least 3,000 volts.

(3) Over 3,000 volts—Wire shall be No. 6 AWG or larger and insulated for at least the circuit voltage.

CONSTRUCTION METHODS

CONSTRUCTION OF VAULT AND PREFABRICATED METAL HOUSING

109-3.1 GENERAL. The Contractor shall construct the transformer vault or prefabricated metal housing at the location indicated in the plans. Vault construction shall be reinforced concrete, concrete masonry, or brick wall as specified. The metal housing shall be prefabricated equipment enclosure to be supplied in the size specified. The mounting pad or floor details, installation methods, and equipment placement are shown in the plans.

The Contractor shall clear, grade, and seed the area around the vault or metal housing for a minimum distance of 10 feet (3 m) on all sides. The slope shall be not less than 1/2-inch per foot (40 mm per m) away from the vault or metal housing in all directions.

109-3.2 FOUNDATION AND WALLS.

a. Reinforced Concrete Construction. The Contractor shall construct the foundation and walls in accordance with the details shown in the plans. Unless otherwise specified, internal ties shall be of the mechanical type so that when the forms are removed the ends of the ties shall be at least 1-inch (25 mm) beneath the concrete surface; the holes shall be plugged and finished to prevent discoloration. Reinforcing steel shall be placed, as shown in the drawings, and secured in position to prevent displacement during the concrete placement.

The external surfaces of the concrete shall be thoroughly worked during the placing operation to force all coarse aggregate from the surface. Thoroughly work the mortar against the forms to produce a smooth finish free from air pockets and honeycomb.

The surface film of all pointed surfaces shall be removed before setting occurs. As soon as the pointing has set sufficiently, the entire surface inside and outside of the vault shall be thoroughly wet with water and rubbed with a No. 16 carborundum stone, or equal quality abrasive, bringing the surface to a paste. All form marks and projections shall be removed. The surface produced shall be smooth and dense without pits or irregularities. The materials which have been ground into a paste during the rubbing process shall be spread or brushed uniformly over the entire surface (except the interior surfaces that are to be painted shall have all paste removed by washing before painting) and permitted to reset. Final exterior finish shall be obtained by rubbing with No. 30 carborundum stone, or an equal quality abrasive. The surface shall be rubbed until the entire surface is smooth and uniform in color.

b. Brick and Concrete Construction. When this type of construction is specified, the foundation shall be concrete conforming to the details shown in the plans. The outer edge of the foundation at the floor level shall be beveled 1-1/2 inches (37 mm) at 45 degrees. Brick walls shall be 8 inches (200 cm) thick, laid in running bond with every sixth course a header course. Brick shall be laid in cement mortar (1 part masonry cement and 3 parts sand) with full mortar bed and shoved joints. All joints shall be completely filled with mortar, and facing brick shall be back-parged with mortar as work progresses. All joints shall be 3/8 inch (9 mm) thick, exterior joints tooled concave, and interior joints struck flush. Both interior and exterior brick

surfaces shall be cleaned and nail holes, cracks and other defects filled with mortar. When specified, a non-fading mineral pigment mortar coloring shall be added to the mortar. Steel reinforcing bars, 3/8-inch (9 mm) in diameter and 12 inches (300 mm) long, shall be set vertically in the center of the brick wall on not more than 2-foot (60 cm) centers to project 2-1/2 (60 mm) inches into the concrete roof slab. Lintels for supporting the brickwork over doors, windows, and louvers shall consist of two 4- x 3- x 3/8-inch (100 x 75 x 9 mm) steel angles. Lintels shall be painted with one coat of red lead before installation, and all exposed parts shall be painted similar to doors and window sash after installation.

Window sills may be concrete poured in place or precast concrete as indicated in the plans. All exposed surfaces shall have a rubbed finish as specified under reinforced concrete construction. After completion, all interior and exterior faces of walls shall be scrubbed with a solution of muriatic acid and water in the proportions of not less than 1 part acid to 10 parts of water. All traces of efflorescence, loose mortar, and mortar stain shall be removed, and the walls washed down with clear water.

c. **Concrete Masonry Construction.** When this type of construction is specified, the foundation shall be concrete conforming to the details shown in the plans. The concrete masonry units shall be standard sizes and shapes and shall conform to ASTM C 90 and shall include the closures, jambs, and other shapes required by the construction as shown in the plans. Standard construction practice shall be followed for this type of work including mortar, joints, reinforcing steel for extensions into roof slab, etc. Plaster for interior walls, if specified, shall be portland cement plaster.

109-3.3 ROOF. The roof shall be reinforced concrete as shown in the plans. Reinforcing steel shall be placed as shown in the drawing and secured in position to prevent displacement during the pouring of the concrete. The concrete shall be poured monolithically and shall be free of honeycombs and voids. The surface shall have a steel-trowled finish and shall be sloped as shown in the drawing. The underside of the roof slab shall be finished in the same manner as specified for walls.

One brush or mop coat of hot asphalt roof coating shall be applied to the top surface of the roof slab. The asphalt material shall be heated to within the range specified by the manufacturer and immediately applied to the roof. The finished coat shall be continuous over the roof surface and free from holidays and blisters. Smears and dribbles of asphalt on the roof edges and building walls shall be removed.

109-3.4 FLOOR. The floor shall be reinforced concrete as shown in the drawings. When present, all sod, roots, refuse, and other perishable material shall be removed from the area under the floor to a depth of 8 inches (200 mm), unless a greater depth is specified in the invitation for bids. This area shall be backfilled with materials consisting of sand, cinders, gravel, or stone. Fill shall be placed in layers not to exceed 4 inches (100 mm) and shall be thoroughly compacted by tamping or rolling. A layer of building paper shall be placed over the fill prior to placing concrete. The floor surfaces shall have a steel-trowled finish. the floor shall be level unless a drain is specified, in which case the floor shall be pitched 1/4-inch (6 mm) per foot downward toward the drain. A 1/4-inch (6 mm) asphalt felt expansion joint shall be placed between floor and foundation walls. The floor shall be poured monolithically and shall be free of honeycombs and voids.

109-3.5 FLOOR DRAIN. If shown in the plans, a floor drain and dry well shall be installed in the center of the floor of the equipment room. The dry well shall be excavated 4 x 4 feet (120 x 120 cm) square and to a depth of 4 feet (120 cm) below the finished floor elevation and shall be backfilled to the elevation of the underside of the floor with gravel - which shall all pass a 2-inch (50 mm) mesh sieve and shall all be retained on a 1/4-inch (6 mm) mesh sieve. The gravel backfill shall be placed in 6-inch (150 mm) maximum layers, and the entire surface of each layer shall be tamped either with a mechanical tamper or with a hand tamper weighing not less than 25 pounds (11 kg) and having a face area of not more than 36 square inches (234 square cm) nor less than 16 square inches (104 square cm). The drain inlet shall be set flush in the concrete floor. The drain shall have a clear opening of not less than 8 inches (200 mm) in diameter.

109-3.6 CONDUITS IN FLOOR AND FOUNDATION. Conduits shall be installed in the floor and through the foundation walls in accordance with the details shown in the plans. All underground conduit shall be painted with a bituminous compound. Conduit shall be installed with a coupling or metal conduit adapter flush with the top of the floor. All incoming conduit shall be closed with a pipe plug to prevent the entrance of foreign material during construction. Space conduit entrances shall be left closed.

109-3.7 DOORS. Doors shall be metal-clad fireproof class a doors conforming to requirements of the National Electric Code and local electrical codes.

109-3.8 PAINTING. The floor, ceiling, and inside walls of concrete construction shall first be given a hardening treatment, after which the Contractor shall apply two coats of paint as specified below, except that interior face brick walls need not be painted. The hardening treatment shall consist of applying two coats of either a commercial floor hardener or a solution made by dissolving 2 pounds (0.9 kg) of magnesium fluosilicate or zinc sulphate crystals in 1 gallon (liter) of water. Each coat shall be allowed to dry at least 48 hours before the next application. After the second treating coat has dried, the surfaces shall be brushed clean of all crystals and thoroughly washed with clear water. Paint for walls and ceiling shall be a light gray color approved by the Engineer. The floor paint shall be a medium gray color approved by the Engineer. Before painting, the surfaces shall be dry and clean. The first coat shall be thinned by adding 2/3-quart (0.166 liters) of spar varnish and 1/3-quart (0.083 liters) of turpentine to each gallon (liter) of paint. The second coat shall be applied without thinning. All doors, lintels, and windows shall be cleaned to remove any rust or foreign material and shall be given one body and one finish coat of white paint. Bare metal surfaces shall be given a prime coat of red lead prior to the body and finish coats.

109-3.9 LIGHTS AND SWITCHES. The Contractor shall furnish and install a minimum of two duplex convenience outlets in the vault room. Where a control room is specified, at least two duplex outlets shall be installed.

INSTALLATION OF EQUIPMENT IN VAULT OR PREFABRICATED METAL HOUSING

109-3.10 GENERAL. The Contractor shall furnish, install, and connect all equipment, equipment accessories, conduit, cables, wires, buses, grounds, and support necessary to insure a complete and operable electrical distribution center for the airport lighting system as specified herein and shown in the plans. When specified, an emergency power supply and transfer switch shall be provided and installed.

The equipment installation and mounting shall comply with the requirements of the National Electrical Code and local code agency having jurisdiction.

109-3.11 POWER SUPPLY EQUIPMENT. Transformers, regulators, booster transformers, and other power supply equipment items shall be furnished and installed at the location shown in the plans or as directed by the Engineer. The power supply equipment shall be set on steel "H" sections, "I" beams, channels, or concrete blocks to provide a minimum space of 1-1/2 inches (37 mm) between the equipment and the floor. The equipment shall be placed so as not to obstruct the oil-sampling plugs of the oil-filled units; and name-plates shall, so far as possible, not be obscured.

If specified in the plans and specifications, equipment for an alternate power source or an emergency power generator shall be furnished and installed. The alternate power supply installation shall include all equipment, accessories, an automatic changeover switch, and all necessary wiring and connections. The emergency power generator set shall be the size and type specified.

109-3.12 SWITCHGEAR AND PANELS. Oil switches, fused cutouts, relays, transfer switches, panels, panel boards, and other similar items shall be furnished and installed at the location shown in the plans or as directed by the Engineer. Wall or ceiling-mounted items shall be attached to the wall or ceiling with galvanized bolts of not less than 3/8-inch (9 mm) diameter engaging metal expansion shields or anchors in masonry or concrete vaults.

109-3.13 DUCT AND CONDUIT. The Contractor shall furnish and install square-type exposed metallic ducts with hinged covers for the control circuits in the vault. These shall be mounted along the walls behind all floor-mounted equipment and immediately below all wall-mounted equipment. The hinged covers shall be placed to open from the front side with the hinges at the front bottom.

Wall brackets for square ducts shall be installed at all joints 2 feet (60 cm) or more apart with intermediate brackets as specified. Conduit shall be used between square ducts and equipment or between different items of equipment when the equipment is designed for conduit connection. When the equipment is not designed

for conduit connection, conductors shall enter the square-type control duct through insulating bushings in the duct or on the conduit risers.

109-3.14 CABLE ENTRANCE AND HIGH-VOLTAGE BUS SYSTEM. Incoming underground cable from field circuits and supply circuits will be installed outside the walls of the transformer vault as a separate item under Item L-108. The Contractor installing the vault equipment shall bring the cables from the trench or duct through the entrance conduits into the vault and make the necessary electrical connections. For the incoming and outgoing high voltage load circuits, the Contractor shall furnish and install rigid metallic vi conduit risers, surmounted by potheads, from floor level to the level as shown in the plans.

The incoming high-voltage power supply service to the vault shall enter below the floor of the vault and shall rise from the floor level in a rigid metallic conduit riser, surmounted by a pothead, as described above. Using insulated high-voltage cable, the incoming power service shall be connected from the pothead to the oil-fused cutouts or to the specified disconnecting switch or equipment. From the oil-fused cutouts or disconnecting device, the insulated service conductors shall be connected to the overhead voltage bus system of the vault. The high-voltage bus system shall utilize the materials specified and shall be mounted and installed in accordance with the requirements of the National Electrical Code or the local code agency having jurisdiction.

109-3.15 WIRING AND CONNECTIONS. The Contractor shall make all necessary electrical connections in the vault in accordance with the wiring diagrams furnished and as directed by the Engineer. In wiring to the terminal blocks, the Contractor shall leave sufficient extra length on each control lead to make future changes in connections at the terminal block. This shall be accomplished by running each control lead the longest way around the box to the proper terminal. Leads shall be neatly laced in place.

109-3.16 MARKING AND LABELING. All equipment, control wires, terminal blocks, etc., shall be tagged, marked, or labeled as specified below:

a. Wire Identification. The Contractor shall furnish and install self-sticking wire labels or identifying tags on all control wires at the point where they connect to the control equipment or to the terminal blocks. wire labels, if used, shall be of the self-sticking preprinted type and of the manufacturer's recommended size for the wire involved. identification markings designated in the plans shall be followed. Tags, if used, shall be of fiber not less than 3/4-inch (13 mm) in diameter and not less than 1/32-inch (1 mm) thick. Identification markings designated in the plans shall be stamped on tags by means of smalltool dies. Each tag shall be securely tied to the proper wire by a nonmetallic cord.

b. Labels. The Contractor shall stencil identifying labels on the cases of regulators, breakers, and distribution and control relay cases with white oil paint as designated by the Engineer. The letters and numerals shall be not less than 1 inch (25 mm) in height and shall be of proportionate width. The Contractor shall also mark the correct circuit designations in accordance with the wiring diagram on the terminal marking strips which are a part of each terminal block.

METHOD OF MEASUREMENT

109-4.1 The quantity of vaults to be paid for under this item shall consist of the number of vaults constructed in place and accepted as a complete unit.

109-4.2 The quantity of prefabricated metal housings to be paid for under this item shall consist of the number of housings constructed in place and accepted as a complete unit.

109-4.3 The quantity of vault or prefabricated metal housing equipment to be paid for under this item shall consist of all equipment installed, connected, and accepted as a complete unit ready for operation.

BASIS OF PAYMENT

109-5.1 Payment will be made at the contract unit price for each completed and accepted vault or prefabricated metal housing equipment installation. This price shall be full compensation for furnishing all materi-

als and for all preparation, assembly, and installation of these materials, and for all labor, equipment, tools, and incidentals necessary to complete the item.

Payment will be made under:

Item L-109-5.1	Construction of Airport Transformer Vault in Place--per unit
Item L-109-5.2	Installation of Airport Transformer Vault Equipment in Place--per unit
Item L-109-5.3	Construction of Prefabricated Metal Housing and Foundation in Place--per unit
Item L-109-5.4	Installation of Prefabricated Metal Housing Equipment in Place--per unit

MATERIAL REQUIREMENTS

Fed.Spec.J-C-30	Cable and Wire, Electrical (Power, Fixed Installation)
Fed.Spec.SS-A-694	Roof-Coating: Asphalt, Brushing-Consistency
Fed.Spec.W-C-571	Conduit and Fittings, Nonmetal, Rigid; (Asbestos-Cement or Fire-Clay Cement), (For Electrical Purposes)
AC 150/5340-9	Prefabricated Metal Housing for Electrical Equipment
AC 150/5345-3	Specification for L-821 Panels for Remote Control of Airport Lighting
AC 150/5345-5	Circuit Selector Switch
AC 150/5345-7	Specification for L-824 Underground Electrical Cable for Airport Lighting Circuits
AC 150/5345-10	Specification for Constant Current Regulators and Regulator Monitors
AC 150/5345-13A	Specification for L-841 Auxiliary Relay Cabinet Assembly for Pilot Control of Airport Lighting Circuits
ASTM A 615	Specification for Deformed and Plain Billet Steel Bars for Concrete Reinforcement
ASTM C 62	Specification for Building Brick (Solid Masonry Units Made from Clay or Shale)
ASTM D 83	Red Lead Pigment
REA BULLETIN 345-14	REA Specification for Fully Color-Coded, Polyethylene-Insulated, Double Polyethylene-Jacketed Telephone Cables for Direct Burial

ITEM L-110 INSTALLATION OF AIRPORT UNDERGROUND ELECTRICAL DUCT

DESCRIPTION

110-1.1 This item shall consist of underground electrical ducts installed in accordance with this specification at the locations and in accordance with the dimensions, designs, and details shown in the plans. This item shall include the installation of all underground electrical ducts or underground conduits. It shall also include all trenching, backfilling, removal, and restoration of any paved areas; manholes, concrete encasement, mandreling installation of steel drag wires and duct markers, capping, and the testing of the installation as a completed duct system ready for installation of cables, to the satisfaction of the Engineer.

EQUIPMENT AND MATERIALS

110-2.1 GENERAL. All equipment and materials covered by referenced specifications shall be subject to acceptance through manufacturer's certification of compliance with the applicable specification when so requested by the Engineer.

110-2.2 BITUMINOUS FIBER DUCT. Bituminous fiber duct and fittings shall conform to the requirements of Underwriters Laboratories Standard 543.

a. Type I, for concrete encasement.

b. Type II, for direct burial.

110-2.3 ASBESTOS CEMENT DUCT. Asbestos cement duct and fittings shall conform to the requirements of Fed. Spec. W-C-571 and shall be one of the following, as specified in the proposal:

a. Type I, for concrete encasement.

b. Type II, for direct burial.

110-2.5 STEEL CONDUIT. Rigid steel conduit and fittings shall conform to the requirements of Underwriters Laboratories Standard 6, 514, and 1242.

110-2.6 CONCRETE. Concrete shall conform to Item P-610, Structural Portland Cement Concrete, using 1-inch (25 mm) maximum size coarse aggregate.

110-2.7 PLASTIC CONDUIT. Plastic conduit and fittings shall conform to the requirements of Fed. Spec. W-C-1094 and shall be one of the following, as specified in the proposal:

a. Type I - suitable for underground use either directly in the earth or encased in concrete.

b. Type II - suitable for either above ground or underground use.

CONSTRUCTION METHODS

110-3.1 GENERAL. The Contractor shall install underground ducts at the approximate locations indicated in the airport layout plans. The Engineer shall indicate specific locations as the work progresses. Ducts shall be of the size, material, and type indicated in the plans or specifications. Where no size is indicated in the plans or specifications, the ducts shall be not less than 3 inches (75 mm) inside diameter. All duct lines shall be laid so as to grade toward handholes, manholes and duct ends for drainage. Grades shall be at least 3 inches (75 mm) per 100 feet (30 m). On runs where it is not practicable to maintain the grade all one way, the duct lines shall be graded from the center in both directions toward manholes, handholes, or duct ends. Pockets or traps where moisture may accumulate shall be avoided.

The Contractor shall mandrel each duct. An iron-shod mandrel, not more than 1/4-inch (6 mm) smaller than the bore of the duct shall be pushed through each duct by means of jointed conduit rods. The mandrel shall have a leather or rubber gasket slightly larger than the duct hole.

All ducts installed shall be provided with a No. 10 gauge galvanized iron or steel drag wire for pulling the permanent wiring. Sufficient length shall be left in manholes or handholes to bend the drag wire back to prevent it from slipping back into the duct. Where spare ducts are installed, as indicated on the plans, the open ends shall be plugged with removable tapered plugs, designed by the duct manufacturers, or with hardwood plugs conforming accurately to the shape of the duct and having the larger end of the plug at least 1/4-inch (6 mm) greater in diameter than the duct.

All ducts shall be securely fastened in place during construction and progress of the work and shall be plugged to prevent seepage of grout, water, or dirt. Any duct section having a defective joint shall not be installed.

All ducts, except steel conduit, installed under runways, taxiways, aprons, and other paved areas shall be encased in a concrete envelope.

Where turf is well established and the sod can be removed, it shall be carefully stripped and properly stored.

Trenches for ducts may be excavated manually or with mechanical trenching equipment. Walls of trenches shall be essentially vertical so that a minimum of shoulder surface is disturbed. Blades of road patrols or graders shall not be used to excavate the trench. The Contractor shall ascertain the type of soil or rock to be excavated before bidding. All excavation shall be unclassified.

110-3.2 DUCTS ENCASED IN CONCRETE. Unless otherwise shown in the plans, concrete-encased ducts shall be installed so that the top of the concrete envelope is not less than 18 inches (45 cm) below the finished subgrade where installed under runways, taxiways, aprons, or other paved areas, and not less than 18 inches (45 cm) below finished grade where installed in unpaved areas. Ducts under paved areas shall extend at least 3 feet (90 cm) beyond the edges of the pavement or 3 feet (90 cm) beyond any underdrains which may be installed alongside the paved area. Trenches for concrete-encased ducts shall be opened the complete length before concrete is laid so that if any obstructions are encountered, proper provisions can be made to avoid them. All ducts for concrete encasements shall be placed on a layer of concrete not less than 3 inches (75 mm) thick prior to its initial set. Where two or more ducts are encased in concrete, the Contractor shall space them not less than 1-1/2 inches (37 mm) apart (measured from outside wall to outside wall) using spacers applicable to the type of duct. As the duct laying progresses, concrete not less than 3 inches (75 mm) thick shall be placed around the sides and top of the duct bank. End bells or couplings shall be installed flush with the concrete encasement where required.

When specified, the Contractor shall reinforce the bottom side and top of encasements with steel reinforcing mesh or fabric or other approved metal reinforcement. When directed, the Contractor shall supply additional supports where the ground is soft and boggy, where ducts cross under roadways, or where otherwise shown on the plans. under such conditions, the complete duct structure shall be supported on reinforced concrete footings, piers, or piles located at approximately 5 foot (150 cm) intervals.

When clay or soapstone ducts are specified, they shall be installed with concrete encasement as described above. Clay conduit shall be of the single-bore type. Where the self-centering socket-joint type of single clay duct is used, conduit shall be built up, tier by tier, and separated only by sufficient mortar or fine aggregate concrete to bed the ducts evenly and fill all voids between ducts. Single ducts shall be jointed together and the joints grouted with portland cement mortar. A suitable gasket (of rubber or other approved material) shall first be placed in the receptacle end of the duct, prior to the joining operation, in order to exclude all mortar from the duct.

Where the square bore butt-joint type of clay duct, single or multicell, is used, sections shall be aligned with at least four steel dowel pins and joints wrapped with duct tape 6 inches (150 mm) wide and lapped 6 inches (150 mm) . All joints in a bank of single-bore ducts shall be staggered, beginning evenly from the manhole or handhole, by means of short lengths 6, 8, 9, 12, and 15 inches (150, 200, 230, 300, 380 mm) long. Cement mortar shall be trowled around each and every joint. Voids in the duct bank, caused by the external shape of the corners of the conduit, shall also be filled with mortar. The joining and joints of soapstone duct shall be done in accordance with the manufacturer's recommendations.

110-3.3 DUCTS WITHOUT CONCRETE ENCASEMENT. Trenches for single-duct lines shall be not less than 6 inches (150 mm) nor more than 12 inches (300 mm) wide, and the trench for 2 or more ducts installed at the same level shall be proportionately wider. Trench bottoms for ducts without concrete encasement shall be made to conform accurately to grade so as to provide uniform support for the duct along its entire length.

A layer of fine earth material, at least 4 inches (100 mm) thick (loose measurement) shall be placed in the bottom of the trench as bedding for the duct. The bedding material shall consist of soft dirt, sand or other fine fill, and it shall contain no particles that would be retained on a 1/4-inch (6 mm) sieve. The bedding material shall be tamped until firm.

Unless otherwise shown in plans, ducts for direct burial shall be installed so that the tops of all ducts are at least 18 inches (45 cm) below the finished grade.

When two or more ducts are installed in the same trench without concrete encasement, they shall be spaced not less than 2 inches (50 mm) apart (measured from outside wall to outside wall) in a horizontal direction and not less than 6 inches (150 mm) apart in a vertical direction.

Trenches shall be opened the complete length before duct is installed so that if any obstructions are encountered, proper provisions can be made to avoid them.

110-3.4 DUCT MARKERS. The location of the ends of all ducts shall be marked by a concrete slab marker 2 feet (60 cm) square and 4 inches (100 mm) thick extending approximately 1 inch (25 mm) above the surface. The markers shall be located above the ends of all ducts or duct banks, except where ducts terminate in a handhole, manhole, or building.

The Contractor shall impress the word "duct" on each marker slab. He shall also impress on the slab the number and size of ducts beneath the marker. The letters shall be 4 inches (100 mm) high and 3 inches (75 mm) wide with width of stroke 1/2-inch (12 mm) and 1/4-inch (6 mm) deep or as large as the available space permits.

110-3.5 BACKFILLING. After concrete-encased ducts have been properly installed and the concrete has had time to set, the trench shall be backfilled in at least two layers with excavated material not larger than 4 inches (100 mm) in diameter and thoroughly tamped and compacted to at least the density of the surrounding undisturbed soil. If necessary to obtain the desired compaction, the backfill material shall be moistened or aerated as required.

Trenches shall not be excessively wet and shall not contain pools of water during backfilling operations.

The trench shall be completely backfilled and tamped level with the adjacent surface: except that, when sod is to be placed over the trench, the backfilling shall be stopped at a depth equal to the thickness of the sod to be used, with proper allowance for settlement.

Any excess excavated material shall be removed and disposed of in accordance with instructions issued by the Engineer.

For ducts without concrete envelope, 8 inches (200 cm) of sand, soft earth, or other fine fill (loose measurement) shall be placed around the ducts and carefully tamped around and over them with hand tampers. The remaining trench may be filled with regular run of excavated material and thoroughly tamped as specified above.

110-3.6 RESTORATION. Where sod has been removed, it shall be replaced as soon as possible after the backfilling is completed. All areas disturbed by the trenching, storing of dirt, cable laying, pad construction and other work shall be restored to its original condition. The restoration shall include any necessary topsoiling, fertilizing, liming, seeding, sprigging, or mulching. All such work shall be performed in accordance with the FAA Standard Turfing Specifications. The Contractor shall be held responsible for maintaining all disturbed surfaces and replacements until final acceptance.

METHOD OF MEASUREMENT

110-4.1 Underground duct shall be measured by the linear feet (meter) of duct installed, measured in place, completed, and accepted. Separate measurement shall be made for the various types and sizes.

BASIS OF PAYMENT

110-5.1 Payment will be made at the contract unit price for each type and size of single-way or multi-way duct completed and accepted. This price shall be full compensation for furnishing all materials and for all preparation, assembly, and installation of these materials, and for all labor, equipment, tools, and incidentals necessary to complete this item.

Payment will be made under:

Item L-110-5.1	Single-Way or Multi-Way Electrical Duct--per linear foot (meter)

MATERIAL REQUIREMENTS

Fed.Spec.W-C-571	Conduit and Fittings, Nonmetal, Rigid; (Asbestos-Cement or Fire-Clay Cement), (For Electrical Purposes)
Fed.Spec.W-C-1094	Conduit and Fittings; Nonmetallic, Rigid, (Plastic)
Underwriters Laboratories Standard 6	Rigid Metal Conduit
Underwriters Laboratories Standard 514	Fittings for Conduit and Outlet Boxes
Underwriters Laboratories Standard 543	Impregnated-Fiber Electrical Conduit
Underwriters Laboratories Standard 1242	Intermediate Metal Conduit

ITEM L-119 INSTALLATION OF AIRPORT OBSTRUCTION LIGHTS

DESCRIPTION

119-1.1 This item shall consist of furnishing and installing obstruction lights in accordance with these specifications. Included in this item shall be the furnishing and installing of wood poles, steel or iron pipes, or other supports as required in the plans or specifications.

This item shall also include all wire and cable connections, the furnishing and installing of all necessary conduits and fittings, insulators, pole steps, pole crossarms, and the painting of poles and pipes. In addition, it includes the furnishing and installing of all lamps and, if required, the furnishing and installing of insulating transformers, the servicing and testing of the installation and all incidentals necessary to place the lights in operation as completed units to the satisfaction of the Engineer.

EQUIPMENT AND MATERIALS

119-2.1 GENERAL.

a. Airport lighting equipment and materials covered by Federal Aviation Administration (FAA) specifications shall have the prior approval of the FAA, and are listed in Advisory Circular (AC) 150/5345-1, Approved Airport Equipment.

b. All other equipment and materials covered by other reference specifications shall be subject to acceptance through manufacturer's certification of compliance with the applicable specification when requested by the Engineer.

119-2.2 OBSTRUCTION LIGHTS. The obstruction lights shall conform to the requirements of AC 150/5345-43, Specification for Obstruction Lighting Equipment.

119-2.3 INSULATING TRANSFORMERS. Where required for series circuits, the insulating transformers shall conform to the requirements of AC 150/5345-47, Isolation Transformers for Airport Lighting Systems.

119-2.4 TRANSFORMER HOUSING. Transformer housings, if specified, shall conform to AC 150/5345-42, Specification for Airport Light Base and Transformer Housings, Junction Boxes, and Accessories.

119-2.5 CONDUIT. Steel conduit and fittings shall be in accordance with Underwriters Laboratories Standard 6, 514, and 1242.

119-2.6 WIRES. Wires in conduit rated up to 5,000 volts shall conform to AC 150/5345-7, Specification for L-824 Underground Electrical Cable for Airport Lighting Circuits, for rubber insulated neoprene covered wire, or Fed. Spec. J-C-30, Type RHW, for rubber insulated fibrous covered wire. For ratings up to 600 volts, thermoplastic wire conforming to Fed. Spec. J-C-30, Types TW, THW, and THWN, shall be used. The wires shall be of the type, size, number of conductors, and voltage shown in the plans or in the proposal. Overhead line wire from pole to pole, where specified, shall conform to ANSI 8.35.

119-2.7 MISCELLANEOUS. Paint, poles, pole steps, insulators, and all other miscellaneous materials necessary for the completion of this item shall be new and first-grade commercial products. These products shall be as specified in the plans or specifications.

CONSTRUCTION METHODS

119-3.1 PLACING THE OBSTRUCTION LIGHTS. The Contractor shall furnish and install single- or double-obstruction lights as specified in the proposal and shown in the plans. The obstruction lights shall be mounted on poles, buildings, or towers approximately at the location shown in the plans. The exact location shall be as directed by the Engineer.

119-3.2 INSTALLATION ON POLES. Where obstruction lights are to be mounted on poles, each obstruction light shall be installed with its hub at least as high as the top of the pole. All wiring shall be run in

not less than 1-inch (25 mm) galvanized rigid steel conduit. If specified, pole steps shall be furnished and installed, the lowest step being 5 feet (150 cm) above ground level. Steps shall be installed alternately on diametrically opposite sides of the pole to give a rise of 18 inches (45 cm) for each step. Conduit shall be fastened to the pole with galvanized steel pipe straps and shall be secured by galvanized lag screws. Poles shall be painted as shown in the plans and specifications.

When obstruction lights are installed on existing telephone or power poles, a large fiber insulating sleeve of adequate diameter and not less than 4-feet (120 cm) long, shall be installed to extend 6 inches (150 mm) above the conductors on the upper crossarm. In addition, the sleeve shall be at least 18 inches (45 cm) below the conductors on the lower crossarm. The details of this installation shall be in accordance with the plans.

119-3.3 INSTALLATION ON BEACON TOWER. Where obstruction lights are installed on a beacon tower, two obstruction lights shall be mounted on top of the beacon tower using 1-inch (25 mm) conduit. The conduit shall screw directly into the obstruction light fixtures and shall support them at a height of not less than 4 inches (100 mm) above the top of the rotating beacon. If obstruction lights are specified at lower levels, the Contractor shall install not less than 1/2-inch (12 mm) galvanized rigid steel conduit with standard conduit fittings for mounting the fixtures. The fixtures shall be mounted in an upright position in all cases. The conduit shall be fastened to the tower members with "wraplock" straps, clamps, or approved fasteners spaced approximately 5 feet (150 cm) apart. Three coats of aviation-orange paint shall be applied (one prime, one body, and one finish coat) to all exposed material installed.

119-3.4 INSTALLATION ON BUILDINGS, TOWERS, SMOKESTACKS, ETC. Where obstruction lights are to be installed on buildings or similar structures, the installation shall be made in accordance with details shown in the plans. The hub of the obstruction light shall be not less than 1 foot (30 cm) above the highest point of the obstruction except in the case of smokestacks where the uppermost units shall be mounted not less than 5 feet (150 cm), nor more than 10 feet (3 m) below the top of the stack. Conduit supporting the obstruction light units shall be fastened to wooden structures with galvanized steel pipe straps and shall be secured by 1-1/2 inch (37 mm) No. 10 galvanized wood screws. Conduit shall be fastened to masonry structures by the use of expansion shields, screw anchors, or toggle bolts using No. 10, or larger, galvanized wood or machine screws. Conduit fastened to structural steel shall have the straps held with not less than No. 10 roundhead machine screws in drilled and tapped holes. Fastenings shall be approximately 5 feet (150 cm) apart. Three coats of aviation-orange paint shall be applied (one prime, one body, and one finish coat) to all exposed material installed.

119-3.5 SERIES INSULATING TRANSFORMERS. The L-810 series obstruction light does not include a film cutout; therefore, an insulating transformer is required with each series lamp. Double series units of this type require two series insulating transformers. The transformer shall be housed in a base or buried directly in the earth in accordance with the details shown in the plans.

119-3.6 WIRING. The Contractor shall furnish all necessary labor and materials and shall make complete electrical connections from the underground cable or other source of power in accordance with the wiring diagram furnished with the project plans. If underground cable is required for the power feed and if duct is required under paved areas, the cable and duct shall be installed in accordance with (and paid for by) linear foot measurement as described in Item L-108, Installation of Underground Cable for Airports, and Item L-110, Installation of Airport Underground Electrical Duct.

119-3.7 LAMPS. The Contractor shall furnish and install in each unit one or two lamps, as required, conforming to the following requirements:

a. Series lamp—6.6 ampere, 1020-lumen, a-21 clear bulb, medium prefocus base.

b. Multiple lamp—100, 107, or 116 watts; 115, 120, or 125 volts; a-21 clear bulb, medium screw base.

119-3.8 TESTS. The installation shall be fully tested by continuous operation for not less than 1/2 hour as a completed unit prior to acceptance. These tests shall include the functioning of each control not less than 10 times.

METHOD OF MEASUREMENT

119-4.1 The quantity of lights to be paid for under this item shall be the number of single- or double-type obstruction lights installed and accepted as completed units, in place, ready for operation.

BASIS OF PAYMENT

119-5.1 Payment will be made at the contract unit price for each completed obstruction light installed, in place by the Contractor, and accepted by the Engineer. This price shall be full compensation for furnishing all materials and for all preparation, assembly, and installation of these materials, and for all labor, equipment, tools, and incidentals necessary to complete this item.

Payment will be made under:

Item L-119-5.1	Airport Obstruction Light, in Place--per each

MATERIAL REQUIREMENTS

Fed.Spec.J-C-30	Cable and Wire, Electrical (Power, Fixed Installation)
AC 150/5345-7	Specification for L-824 Underground Electrical Cable for Airport Lighting Circuits
AC 150/5345-42	Specification for Airport Light Base and Transformer Housings, Junction Boxes, and Accessories
AC 150/5345-43	Specification for Obstruction Lighting Equipment
AC 150/5345-47	Isolation Transformers for Airport Lighting Systems
ANSI 8.35	Weather-Resistant Polyolefin-Covered Wire and Cable

☆ U.S. GOVERNMENT PRINTING OFFICE: 1989— 241-686/07013