AC 20-106

AIRCRAFT INSPECTION FOR THE GENERAL AVIATION AIRCRAFT OWNER

APRIL 1978

U.S. DEPARTMENT OF TRANSPORTATION
FEDERAL AVIATION ADMINISTRATION
FLIGHT STANDARDS SERVICE
Washington, D.C. 20591

AC 20-106

AIRCRAFT INSPECTION FOR THE GENERAL AVIATION AIRCRAFT OWNER

APRIL 1978

U.S. DEPARTMENT OF TRANSPORTATION
FEDERAL AVIATION ADMINISTRATION
Flight Standards Service

For sale by the Superintendent of Documents, U.S. Government Printing Office
Washington, D.C. 20402

PREFACE

The inspections described in this Aircraft Inspection handbook are NOT intended to replace any required inspection. Rather, they are intended to familiarize persons with the techniques generally applicable to aircraft inspections whether they be owners, pilots, student mechanics, or others with aviation interests.

The services of an appropriately rated certificated repair station, certificated mechanic, or the manufacturer must be utilized for all required inspections and whenever any inspection reveals a questionable condition. We emphasize the fact that reliable inspection capability comes only with experience, and the use of this handbook does NOT qualify an individual to make final airworthiness determinations.

PART I—INSPECTION FUNDAMENTALS

Inspection requirements, owner's responsibilities, inspection time intervals, and sources of basic information are discussed in Part I.

PART II—INSPECTION TECHNIQUES

The general techniques used to inspect an aircraft are discussed in Part II.

To facilitate reference, in the explanation of important inspection processes, arrows appear on many of the illustrations. These indicate either the item or the general area to which the text refers.

Numerous illustrations are used to convey information to the reader in the most clear, graphic, and effective manner.

Acknowledgment of cooperation is extended to the following:

Beech Aircraft Corporation

Cessna Aircraft Company

Cessna Aircraft Company
Aircraft Radio and Control Division

Edo Corporation

Piper Aircraft Corporation

Rockwell International
(Rockwell Commander Aircraft)

The Bendix Corporation
Electric/Fluid Power Division

The Goodyear Tire and Rubber Company

This publication cancels the Personal Aircraft Inspection Handbook, AC 20-9, published in 1964. Suggestions for revision and improvement of this handbook are encouraged and may be forwarded to Department of Transportation, Federal Aviation Administration, Flight Standards National Field Office, AFS-500, P.O. Box 25082, Oklahoma City, Oklahoma 73125.

AIRCRAFT INSPECTION FOR THE GENERAL AVIATION AIRCRAFT OWNER

Contents

	Page
Preface	i
Part I. Inspection Fundamentals	1
Section 1. The Inspection Process	1
Section 2. Preventive Maintenance	4
Section 3. The Forces of Attrition	7
Section 4. Inspection Do's and Don'ts	14
Part II. Inspection Techniques	15
Section 1. Fuselage	15
Section 2. Cabin-Cockpit	21
Section 3. Engine Nacelle	27
Section 4. Landing Gear	42
Section 5. Wing-Center Section	53
Section 6. Empennage	61
Section 7. Propeller	66
Section 8. Radio	71
Section 9. Miscellaneous	75
Section 10. Preflight Inspection	77
Section 11. After Storage	80
APPENDIX A. General Safety Precautions	81
APPENDIX B. Aviation Fuel—Identification and Fueling Procedures	83
APPENDIX C. Certificate of Registration—Aircraft Eligibility and Application	85
APPENDIX D. Certificate of Airworthiness—General Information	87

List of Illustrations

PART I. Inspection Fundamentals

Figure		*Page*
I–1.	Five stresses acting on aircraft	10

Part II. Inspection Techniques

Section 1.		
1–1.	Inspection chart—fuselage	15
1–2.	Cracked fuselage structure	16
1–3.	Cracked former	16
1–4.	Distorted fuselage skin	16
1–5.	Deteriorated fuselage fabric	16

Figure *Page*
1–6. External wing bracing attachment checkpoints 16
1–7. Proper cable routing 17
1–8. Improper cable routing 17
1–9. Proper routing of electrical wiring 17
1–10. Improper routing of electrical wiring 18
1–11. Leakage from chafed hydraulic line 18
1–12. Draining fuel tank sump 18
1–13. Doorlock checkpoints 19
1–14. Emergency exit checkpoints 19
1–15. Interior aft fuselage (light twin) 20

Section 2.

2–1. Inspection chart-cockpit 21
2–2. Inspection chart-cabin 22
2–3. Operational check—fuel tank selector valve 22
2–4. Circuit breaker and fuse panel 23
2–5. Check quantity hydraulic fluid 23
2–6. Instrument panel 24
2–7. Bellcrank checkpoints 24
2–8. Cable rubbing bulkhead 24
2–9. Gustlock 25
2–10. Frayed safety belt 25
2–11. Safety harness 25
2–12. Inspection items on seat 25

Section 3.

3–1. Inspection chart—engine and nacelle 27
3–2. Inspection chart—engine 28
3–3. Fuel strainer checkpoints 29
3–4. Carburetor inspection points 29
3–5. Carburetor air filters 30
3–6. Intake manifold checkpoints 30
3–7. Oil tank inspection 30
3–8. Oil quantity check 31
3–9. Satisfactory oil line installation 31
3–10. Unsatisfactory oil line installation 31
3–11. Oil-cooler checkpoints 32
3–12. Checking sparkplug torque 32
3–13. Unsatisfactory sparkplug cigarette 33
3–14. Igniter plug—gas turbine engine 33
3–15. Exhaust manifold checkpoints 33
3–16. Exhaust stack damage 34
3–17. Heat exchanger-shroud removed 35
3–18. Cowl flap checkpoints 36
3–19. Engine baffles 37
3–20. Engine mount checkpoints 37
3–21. Cracked engine mount 37
3–22. Checking starter security 38
3–23. Inspect cowling for damage 39
3–24. Damaged cowling 38

Figure		Page
3–25.	Repaired cowling	39
3–26.	Cowling installation checkpoints	40
3–27.	Evidence of chafing	41
3–28.	Battery installation checkpoints	41
Section 4.		
4–1.	Examples of tire defects	42
4–2.	Tire protected by drip pan	42
4–3.	Multiple disc-type brake	43
4–4.	Shoe and drum-type brake	43
4–5.	Expander block-type brake	43
4–6.	Disc brake inspection points	43
4–7.	Wheel and brake inspection points	44
4–8.	Hydraulic brake line checkpoints	44
4–9.	Simple master cylinder brake systems	44
4–10.	Cockpit-hydraulic brake line checkpoints	44
4–11.	Wheel checkpoints	45
4–12.	Inspection chart-fixed landing gear	45
4–13.	Fixed nose gear checkpoints	46
4–14.	Oleo-type landing gear checkpoints	46
4–15.	Steerable tailwheel inspection points	47
4–16.	Inspection chart-retractable landing gear	48
4–17.	Retractable main gear checkpoints	47
4–18.	Landing gear retracting	49
4–19.	Retractable nose gear checkpoints	50
4–20.	Retracting mechanism checkpoints	50
4–21.	Typical electrical retraction installation	50
4–22.	Electrical retracting motor and wiring	51
4–23.	Warning microswitch installation	51
4–24.	Gear attachment structure checkpoints	51
4–25.	Float installation inspection points	51
4–26.	Ski installation inspection points	52
Section 5.		
5–1.	Inspection chart-wing-center section	53
5–2.	Indication of defective fabric	54
5–3.	Wood structure inspection points	54
5–4.	Metal structure inspection points	55
5–5.	Lighting damage-flap, lower surface	56
5–6.	Control bellcrank checkpoints	55
5–7.	Fuel tank vent	57
5–8.	Fuel cap, vent, and placard	57
5–9.	Pitot mast, airspeed	58
5–10.	Electrical wiring, proper routing	58
5–11.	Satisfactory leading edge of wing	58
5–12.	Dented leading edge of wing	59
5–13.	Damaged landing light lens	60
5–14.	Deicer boot damage	60
5–15.	Block type gust lock	60

Figure *Page*

Section 6.

6–1. Inspection chart—empennage ---- 61
6–2. Oilcanning of metal skin ---- 62
6–3. External bracing checkpoints ---- 63
6–4. Rudder checkpoints ---- 63
6–5. Rudder quadrant ---- 64
6–6. Stabilizer adjuster checkpoints ---- 65
6–7. Position light checkpoints ---- 65

Section 7.

7–1. Inspection chart—propeller ---- 66
7–2. Damaged metal blade ---- 66
7–3. Three-blade propeller checkpoints ---- 67
7–4. Propeller tip damage ---- 68
7–5. Wood propeller blade—cracked and separated lamination ---- 68
7–6. Propeller governor checkpoints ---- 69
7–7. Propeller spinner checkpoints ---- 69
7–8. Propeller liquid anti-icing system checkpoints ---- 70
7–9. Propeller electrical deicing system checkpoints ---- 70

Section 8.

8–1. Inspection chart—radio ---- 71
8–2. Communication/navigation equipment installation checkpoints ---- 71
8–3. Bonding radio equipment to shock mount ---- 72
8–4. Communication/navigation equipment shock mount ---- 72
8–5. Typical communication/navigation equipment control ---- 72
8–6. Antenna installations checkpoints ---- 73
8–7. ADF antenna—internal loop-tail mount ---- 73
8–8. ADF antenna—fixed loop ---- 73
8–9. Bonding wires and trailing edge static wicks ---- 74

Section 9.

9–1. Rotating beacon installation ---- 75
9–2. Autopilot control panel ---- 75
9–3. Emergency locator transmitter—remote mount ---- 75
9–4. Emergency locator transmitter—portable mount ---- 76

Section 10.

10–1. Inspection chart—preflight ---- 77

Section 11.

11–1. Bird's nest ---- 80

Part I. INSPECTION FUNDAMENTALS

Section 1. THE INSPECTION PROCESS

The Required Aircraft Inspections

The Federal Aviation Regulations (FARs) require the inspection of all civil aircraft at specific intervals, to assure that the aircraft's condition is equal to its original or properly altered condition with regard to aerodynamic function, structural strength, and resistance to vibration.

Inspection interval requirements are established considering the purpose for which the aircraft is used and its operating environment. Some aircraft must be inspected each 100 hours of time in service while others must be inspected only once each 12 calendar months.

The 100-hour and annual inspections require complete inspection of the aircraft at one time and a certification as to its airworthiness. Some airplanes may be inspected in accordance with a progressive inspection (FAR 91.171) or an approved inspection program (FAR 91.217) wherein portions of the aircraft are inspected according to a predetermined schedule.

The inspection requirements for aircraft, in various types of operation, are stated in FAR 91, Sections 91.169, 91.171, or Subpart D of FAR 91. The latter prescribes an inspection program for large and turbine-powered multiengine airplanes (turbojet and turboprop). If you are concerned with the inspection of a large airplane (over 12,500 pounds) or a turbojet or turbopropeller-powered multiengine airplane, you should determine the inspection requirements for that specific airplane.

The information contained in Section I of this handbook may not be directly applicable to these larger type airplanes, but the inspection techniques will be similar.

FAR 91—General Operating and Flight Rules.

Subpart C of Part 91 prescribes rules governing the maintenance, preventive maintenance, and alteration of U.S. registered civil aircraft operated within or outside the United States. (Inspection is part of maintenance.)

FAR 43—Maintenance, Preventive Maintenance, Rebuilding, and Alteration, prescribes rules governing the maintenance, preventive maintenance, rebuilding, and alteration of aircraft as well as standards for their performance.

Inspection.

Inspection is the critical visual examining, testing, measuring, and functional checking required to determine the airworthiness of the items being inspected.

> NOTE: As mentioned in the preface, the services of a certificated repair station, certificated mechanic, or the manufacturer must be utilized for all required inspections and whenever any inspection reveals a questionable condition.

Scope of Inspections.

Aircraft inspection may range from a casual "walk-around" to a detailed inspection involving complete disassembly and the use of complex inspection aids. The inspections described in this advisory circular can be made without disturbing the assembly of the aircraft except for the removal of inspection access covers, fairings, and removable cowlings.

The Habit of Inspection.

The inspection of your aircraft should become a habit. To establish the habit, begin by performing preflight inspections and work up to detailed inspections. USE the MANUFACTURER'S RECOMMENDATIONS and this handbook as a guide. Develop a system of

319-470 O - 80 - 2

inspection and use an inspection checklist that covers the complete aircraft. Once adopted, you should not deviate from the procedure. After completing a few inspections you will be surprised at how familiar you will be with your aircraft.

Inspection Intervals and Systems.

Federal Aviation Regulations require inspection of aircraft at specific intervals and that they be approved for return to service by certificated and appropriately rated personnel. The purpose of this handbook is to familiarize interested persons with general inspection techniques and to assist pilots and owners in establishing an inspection program which will supplement but NOT replace the required inspections.

The interval of your inspection should be adjusted to provide the greatest value to you considering your aircraft use and the required inspections; e.g., if you are required to have 100-hour inspections, you might want to inspect the aircraft each 25 and 50 hours. If you are required to have only annual inspections, you may wish to inspect the aircraft each 50 to 100 hours of operation. The manufacturer's service instructions will be valuable in establishing these intervals.

Historically, inspection intervals have been established on the basis of flying hours. However, if utilization is low and flying is done over the weekends, you may find it advisable to inspect a small group of items each weekend. This will spread your inspection over a period of time and reduce large demands on your time. Here are some examples of types of inspection intervals:

By hours:

- Daily preflight inspection
- Powerplant (including propeller and engine controls)—every 25 hours
- Flight control systems—every 25 hours
- Landing gear—every 50 hours
- Cabin or cockpit—every 75 hours
- Covering (fabric or metal)—every 100 hours
- Fuselage interior—every 100 hours, etc.

By calendar weeks (eight-week cycle):

- Daily preflight inspection (including propeller and engine controls)
- Powerplant—first and fifth weekend
- Flight control system—second and sixth weekend
- Landing gear—third and seventh weekend
- Cabin or cockpit—fourth and eighth weekend
- Covering (fabric or metal)—eighth weekend
- Fuselage interior—eighth weekend

This weekly inspection schedule will provide a complete aircraft inspection every eight weeks. You may wish to extend or shorten this inspection cycle.

In some cases, it may be convenient to establish a combination of both methods. Regardless of the method chosen, adhere to it faithfully. Do not assume that an item is in good condition. Make a personal inspection each time an inspection is due, according to your plan. There are many inspection items; each of which is essential.

When developing an inspection schedule for your aircraft, consideration should be given to climatic conditions, frequency and type of flight operation conducted, contemplated periods of inactivity, and type of storage facilities. A thorough review of the aircraft manufacturer's service instructions will provide many helpful suggestions on inspections. Most manufacturers provide an inspection schedule for their aircraft which can be segmented as you desire. The information in this handbook will not tell you WHEN to inspect. It will suggest WHAT should be inspected and HOW and WHERE to look for possible defects.

Be sure your plans include the time necessary to regularly inspect your aircraft. If such time cannot be included in your plans, then you should have it done by certificated personnel. When you have inspections conducted by a professional, whether they are required or supplemental in nature, you should specify exactly what inspection is to be accomplished and require the person conducting the inspection to furnish a written statement of the results.

Aircraft Logs.

"Logs," as commonly used, is an inclusive term which applies to the aircraft record "books," and to all supplemental records concerning the aircraft. These logs and records provide a history of maintenance and operation, a control for inspection schedules, data needed to properly accomplish time replacements of components or accessories, and a record of Airworthiness Directive compliance. Most Airworthiness Directive compliance is based on aircraft time-in-service, and it is a regulatory requirement that records be kept up-to-date.

Tools of Inspection.

The tools of inspection are many and varied. They range from a pocket-sized magnifying glass to a complex X-ray machine. The tools required to make a simple inspection, of the type which may be performed by the aircraft owner, are inexpensive and readily available. The following list is typical:

- eight or ten-power magnifying glass
- inspection mirror
- flashlight
- small wire brush
- dull-bladed knife
- round bristle brush and cleaning fluid (use caution when selecting cleaning fluids)
- hydrometer
- some rags
- small kit of common handtools (screwdriver, end wrenches, diagonal cutters, etc.)
- skid-proof stepladder and wheel jacks

REMEMBER

If defects are noted or suspected, have a detailed inspection done by a certificated repair station or certificated mechanic.

Section 2. PREVENTIVE MAINTENANCE

Preventive maintenance means simple preservation and the replacement of small standard parts not involving complex assemblies. It is corrective action taken before it becomes necessary to make more complex repairs. The following preventive maintenance may be accomplished by a certificated pilot, who is the owner or operator of an aircraft, not used in air carrier service.

This list comes from FAR 43, Appendix A, Major Alterations, Major Repairs, and Preventive Maintenance, paragraph (c). It reads as follows:

"(c) ***Preventive maintenance.*** Work of the following type is preventive maintenance:

(1) Removal, installation, and repair of landing gear tires.

(2) Replacing elastic shock absorber cords on landing gear.

(3) Servicing landing gear shock struts by adding oil, air, or both.

(4) Servicing landing gear wheel bearings, such as cleaning and greasing.

(5) Replacing defective safety wiring or cotter keys.

(6) Lubrication not requiring disassembly other than removal of nonstructural items such as cover plates, cowlings, and fairings.

(7) Making simple fabric patches not requiring rib stitching or the removal of structural parts or control surfaces.

(8) Replenishing hydraulic fluid in the hydraulic reservoir.

(9) Refinishing decorative coating of fuselage, wings, tail group surfaces (excluding balanced control surfaces), fairings, cowling, landing gear, cabin, or cockpit interior when removal or disassembly of any primary structure or operating system is not required.

(10) Applying preservative or protective material to components where no disassembly of any primary structure or operating system is involved and where such coating is not prohibited or is not contrary to good practices.

(11) Repairing upholstery and decorative furnishings of the cabin or cockpit interior when the repairing does not require disassembly of any primary structure or operating system or interfere with an operating system or affect primary structure of the aircraft.

(12) Making small simple repairs to fairings, nonstructural cover plates, cowlings, and small patches and reinforcements not changing the contour so as to interfere with proper airflow.

(13) Replacing side windows where that work does not interfere with the structure or any operating system such as controls, electrical equipment, etc.

(14) Replacing safety belts.

(15) Replacing seats or seat parts with replacement parts approved for the aircraft, not involving disassembly of any primary structure or operating system.

(16) Troubleshooting and repairing broken circuits in landing light wiring circuits.

(17) Replacing bulbs, reflectors, and lenses of position and landing lights.

(18) Replacing wheels and skis where no weight and balance computation is involved.

(19) Replacing any cowling not requiring removal of the propeller or disconnection of flight controls.

(20) Replacing or cleaning spark plugs and setting of spark plug gap clearance.

(21) Replacing any hose connection except hydraulic connections.

(22) Replacing prefabricated fuel lines.

(23) Cleaning fuel and oil strainers.

(24) Replacing batteries and checking fluid level and specific gravity.

(25) Removing and installing glider wings and tail surfaces that are specifically designed for quick removal and installation and when such removal and installation can be accomplished by the pilot."

Technical data for use in performing preventive maintenance may be found in the manufacturers' manuals. General data on aircraft maintenance may be obtained from the following Advisory Circulars (AC) published by the FAA. All are available from the Superintendent of Documents (Supt. Docs.) and should be ordered by the stock numbers (SN) listed after each AC.

AC 65–9A, Airframe and Powerplant Mechanics General Handbook, is designed as a study manual for persons preparing for a mechanic certificate with airframe or powerplant ratings. Emphasis in this volume is on theory and methods of application. It is intended to provide basic information about principles and fundamentals common to both the airframe and powerplant ratings. (SN 050–007–00379–0.)

AC 65–12A, Airframe and Powerplant Mechanics Powerplant Handbook, is designed to familiarize student mechanics with the construction, theory of repair, operation, and maintenance of aircraft powerplants and propellers. (SN 050–007–00373–1.)

AC 65–15A, Airframe and Powerplant Mechanics Airframe Handbook, is designed to familiarize student mechanics with construction, theory of repair, operations, and maintenance of airframe and airframe systems. (SN 050–007–00391–9.)

Advisory circulars are available either free from FAA or sold by the Superintendent of Documents. The source, ordering instructions, and current prices are listed in the FAA Advisory Circular Checklist, AC 00–2. The checklist should be consulted for current information before placing any orders. (A reference copy is available at any FAA office or GPO Bookstore.)

The checklist is published three times a year and is available free from Department of Transportation, Publications Section, M–443.1, Washington, D.C. 20590.

The Status of Federal Aviation Regulations, AC 00–44, is issued as changes require and is also available free from the above address.

Malfunction or Defect Reports (FAA Form 8330–2) are provided free of charge and with return postage paid by the FAA. They are normally preaddressed when provided, and are a convenient means of ensuring that data, required to make the report meaningful, is included.

These reports are a means by which the aviation community may interchange service information since the data received on the reports is published in numerous FAA publications, available free or on a subscription basis.

Malfunction or Defect Reports are also a data source used by the FAA in monitoring the service reliability of aeronautical products. When trends are noted which indicate possible problem areas, the FAA may alert the aviation community or initiate studies to determine the extent and exact nature of the problem.

All aircraft owners, pilots, mechanics, and non-certificated maintenance facilities are invited to participate in the program by submitting M or D Reports whenever they become aware of items that may be of interest to others. The M or D Reports, FAA Form 8330–2, may be obtained from most airport managers, maintenance facilities, or any FAA District Office.

If you have had an experience you wish to share, include in the report all information available; how the occurrence became apparent, describe the malfunction, and include model numbers, part numbers, and serial numbers.

Parts may be submitted with the report by special arrangement. Pictures, sketches, or snapshots are especially desirable. Include identification data such as make, model, and assembly name as an attachment rather than printing on the photograph. If you have any questions, or need any help, your local FAA District Office will gladly assist you.

The success of the program depends entirely on participation by the aviation public. If you have comments about the program or have a special experience or a "would you believe this" situation, send them to Federal Aviation Administration, Flight Standards National Field Office, Safety Data Branch, AFS-580, P.O. Box 25082, Oklahoma City, Oklahoma 73125.

Section 3. THE FORCES OF ATTRITION

A Definition of Attrition.

Attrition, for the purpose of this handbook, is defined as the general wear and tear of an aircraft during its service life. The five basic sources of attrition are: weather, friction, overloads, heat, and vibration. These forces assert themselves in many ways on the entire structure of the aircraft during its life span. Persons making inspections should be familiar with the visible, measurable, or otherwise detectable effects of these forces.

Weather.

Much depends on local conditions such as heat, humidity, rain, wind, and snow. Each element, or combination of elements, has its own peculiar effect upon different parts of the aircraft. These effects are discussed briefly in the following paragraphs.

Atmospheric Moisture. The moisture content of the atmosphere is directly related to the severity of oxidation found on an aircraft. Aircraft based near large bodies of water or in areas receiving heavy rainfall are more susceptible to oxidation (rusting and corrosion) than those based in arid areas. Fabric surfaces and wood structures also decay due to atmospheric conditions.

Oxidation. This condition is caused by the chemical combination of metal and oxygen. Oxidation is called rusting when talking about ferrous materials; i.e., steel or iron. The oxidation of copper, aluminum, and other nonferrous materials is usually known as corrosion.

Rusting. Rust usually begins as a reddish discoloration on the surface and, if permitted to progress, will result in a reddish brown crustiness on the metal surface. Removal of the crust will probably reveal pitting. If pitted, the part should be examined by an experienced mechanic qualified to evaluate the extent of the damage and recommend or take corrective action.

The steel tube members of an aircraft equipped with floats should be given particularly close examination. It is possible for water to enter the interior of these members, allowing rust to form on the inside of the tubes while the exterior appears to be in good condition. The best way to check for this condition is to have small holes strategically drilled in the tubing. If water is present, it will run from the holes. It is sometimes desirable to have small pieces cut from critical tube members in order to obtain positive knowledge of the condition of the tube interiors.

CAUTION

Tests of this nature should be performed by, or under the supervision of, a certificated mechanic or repair station and entered in the aircraft records. Specialized experience and skill are required to determine where water is most apt to concentrate, and where and how to drill the tubing.

Rusting may be prevented or retarded by applying a protective coating to prohibit the atmosphere from coming in contact with the bare metal. This is usually accomplished by electrolytic plating or the application of a zinc base paint. Plating may only be accomplished by certificated personnel.

The interior of steel and aluminum structural tubing is protected by flushing with hot linseed oil, paralketone, or other corrosion inhibitors. The holes drilled for this operation are usually plugged with sheet metal screws (see CAUTION above).

Corrosion. Aluminum, magnesium, and other nonferrous metals are susceptible to corrosion whenever the protective coating deteriorates. Deterioration is accelerated whenever the coat-

ing is in contact with an eroding chemical such as battery acid, insecticide, fertilizer or defoliants. Contact between two unprotected dissimilar metals sets the stage for galvanic action and corrosion, the rate of which increases greatly in the presence of moisture, especially saltwater.

Ordinary corrosion of aluminum, magnesium, or aluminum alloy parts can be detected by watching for signs of surface flaking, pitting, or a white or grayish-white powdering. If pitting is apparent after removing the flakes or powder film, an experienced mechanic should be contacted to evaluate the damage. On aluminum and magnesium (or their alloys) surfaces that have been painted, watch for paint bubbles or blisters. These indicate corrosion under the paint. The suspected part should be cleaned to the bare metal and examined carefully.

Decay of Wood Structure. The protective coating on wood structures usually consists of high grade varnish or some type of transparent enamel. An acceptable coating will have a hard glossy appearance. Whenever and wherever the protective coating deteriorates, decay will start.

Healthy wood will splinter if probed with a dull knife point. Decayed wood will crumble or break away in chunks. Weathering of the structure is first indicated by a dull appearing surface, which means that the protective film has broken down. Be especially alert to wooden components subject to the collection of moisture and/or poor ventilation.

Decay of Fabric. The decay of fabric is somewhat similar to the decay of wood. If exposed to the elements, fabric absorbs moisture and other harmful substances unless it is protected by several applications of cellulose nitrate or cellulose acetate, liquids commonly known as "dope." When "dope" is applied, it acts to tighten the fabric and produces a hard, smooth, opaque finish. In time, this finish becomes brittle and develops cracks which expose the bare fabric to the harmful effects of ultraviolet light, dirt, oil, and mildew. The strength of the fabric decreases to below minimum str ·h and is no longer airworthy.

The effect of decay on finished fabric surfaces can be ascertained only by testing. To determine if a test is necessary, examine the fabric surface. If the surface no longer presents a hard flexible glossy finish, is severly abraded, or cracks are present, testing is appropriate.

A manual punch test, performed by a qualified repair station or mechanic, will provide an indication of fabric strength. A conclusive test can only be done by a recognized testing laboratory, wherein fabric samples are tested under specified temperature and humidity conditions. If laboratory test facilities are not readily available, contact your local FAA inspector for information in their regard.

Since re-covering a surface is usually an expensive process, economics dictates the practice of good preventive maintenance. Washing fabric-covered surfaces with mild soap and water, at reasonable intervals, will do much to prolong the life of dope and fabric. Protection from sunlight also prolongs fabric life, since ultraviolet light is a prime factor in fabric deterioration.

Friction

Friction is described as the resistance to relative motion between two bodies in contact. Like any machine, the aircraft develops friction in hundreds of moving parts. The effect of friction on the aircraft and its components is known as wear. Wear cannot be prevented, but steps can be taken to deter its ultimate effects on the aircraft's airworthiness by proper lubrication, alignment of moving parts, and cleanliness. To better understand inspection techniques, the terms used to describe the various conditions of wear, due to friction, must be understood. They are as follows:

Abrasion is a form of wear caused by the presence of an abrasive substance between two moving parts. In the flight control system, the possibility of abrasion can be detected by a gritty, grinding sensation noticeable during operation. Landing gear joints subjected to abrasion may exhibit an uneven jerky action when in motion. Usually a black gritty substance will be noticed at any joint subjected to abrasion.

Burnishing is the polishing of a surface by sliding contact with another smooth, harder metallic surface. Usually there is no displacement or removal of metal. Burnishing is probably the least serious of friction-caused problems; however, it should be very closely monitored. In can be considered a warning of an impending more serious condition—galling, which is discussed later.

Chafing is the wear between two parts caused by the rubbing, sliding, or bumping of one on the other. The term is normally used to describe wear between parts not normally in contact. Chafed fabric, wood, or metal can be detected easily since chafing usually marks one or both parts involved. Metal parts, when chafed, show a bright area where contact has been made. Aluminum parts normally display a black or dark gray residue around the point of chafing. The simplest method of inspecting for chafing is to carefully inspect cables, wires, tubes, etc., wherever they are in close proximity to another part or when they are mounted to permit motion.

Cutting results in cuts or grooves in the worn part. The cause of cutting is similar to chafing except that a sharp edge is in contact, instead of a smooth surface.

Dent is an indentation in a surface produced by an object striking with force. The areas surrounding the indentation will usually be slightly upset. Areas especially susceptible to dent damage are the propeller, spinner, nose contour of engine cowling, nose cone of fuselage, and the leading edges of wings, horizontal and vertical stabilizers.

Elongation is the term used to describe the egg-shaped wear of a bearing surface around a bolt, hinge pin, clevis pin, etc. It results in looseness in one plane of motion greater than that of the other planes. Flight control surface hinges, engine control rod ends, flight control push-pull rod ends, bellcrank ends, cable clevis ends, and similar parts are particularly susceptible to this type of wear.

For example, an elevator may have the control cable rigged so taut that a positive pressure is applied on one side of the hinge. During normal operation, the hinge bearing will wear egg-shaped due to the hinge pin rotating under a thrust load imposed by the cable.

Erosion is the loss of metal from the surface by mechanical action of foreign materials, such as fine sand or water. The eroded area will be rough and may be lined in the direction in which the foreign material moved relative to the surface. Aircraft operated from unimproved airports are particularly susceptible to erosion, primarily on propellers, landing gear, cowling, and leading edges of wings and stabilizers.

Galling is the breakdown (or buildup) of metal surface due to excessive friction between two parts having relative motion. Particles of the softer metal are torn loose and "welded" to the harder metal. Galling quite often begins as burnishing.

Gouge. A gouge usually involves material loss but may be largely the displacement of material and results from contact with foreign material under heavy pressure.

Scratch. A slight tear or break in material surface from light momentary contact with foreign material or object.

Score is a deeper (than scratch) tear or break in metal surface from contact under pressure. It may show discoloration from the temperature produced by friction. The term is normally used to describe conditions on parts designed to run together; i.e., a worn bearing might score the shaft.

Tear is a discontinuity which has progressed through the full thickness of the material.

Overload.

Aircraft are designed to absorb the loads imposed during normal operation and accept a certain amount of overload. Excessive loads, however, result in failure or deformation of the structure. This deformation may be slight or prominent, but it is usually visible. In any case, it can be detected and classified by certain appearances peculiar to the type of overload applied.

In the majority of cases, loads which result in deformed parts also overload the adjacent structure. Because of the possibility of hidden damage, a qualified mechanic, repair station, or the aircraft manufacturer should be called upon to make a detailed inspection when deformation is noted. This is especially true when an aircraft has been in an accident or subjected to suspected overloads on the structure.

Types of forces.

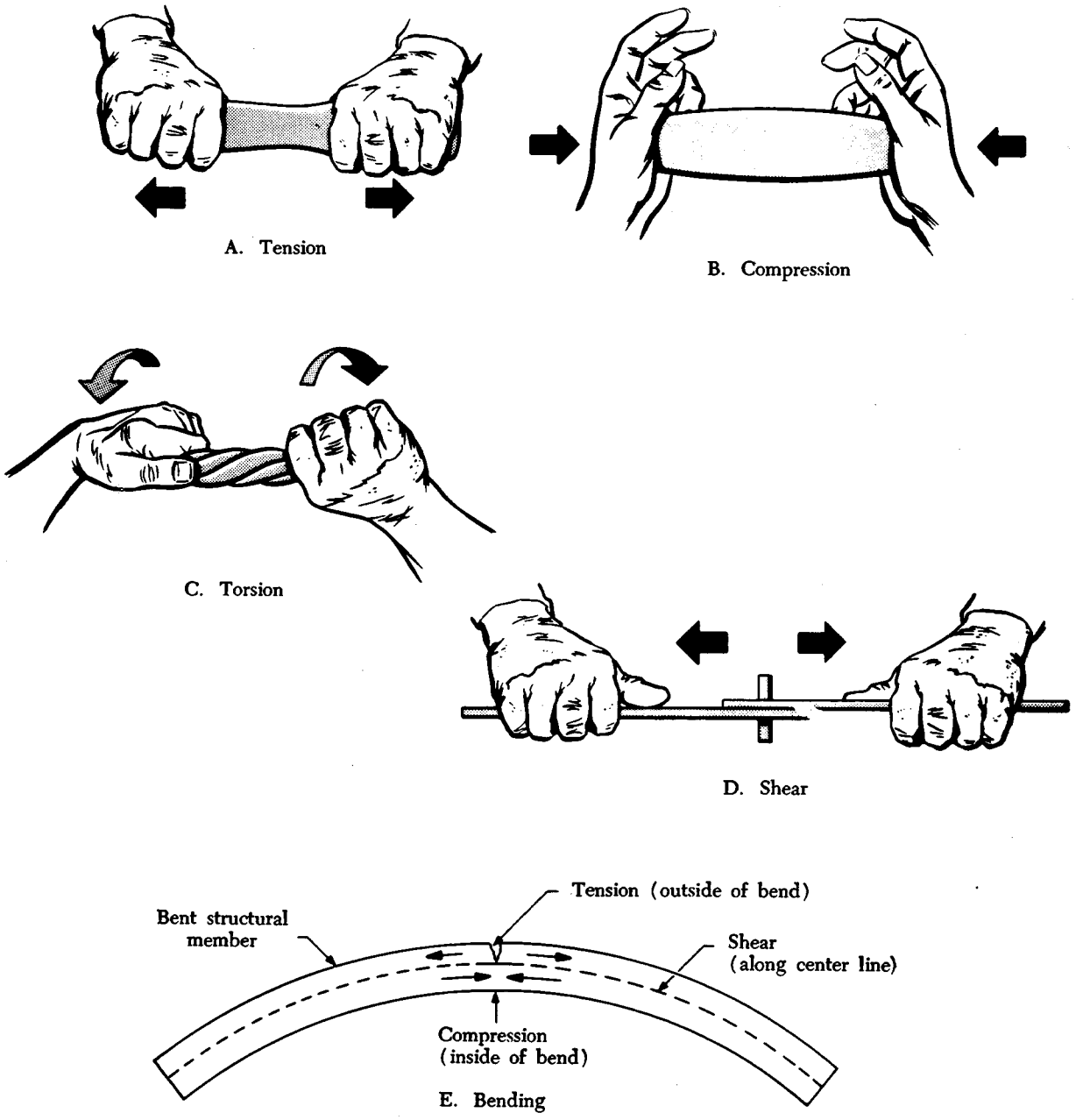

FIGURE I-1. Five stresses acting on aircraft.

Tension. When a load is applied at either or both ends of an item, tending to pull it apart, it is loaded in tension. Overloads due to tension usually occur after a hard landing, taxiing on a rough field, or during flight in very turbulent air. After a hard landing, all attachment fittings should be examined for tension failures or deformation. Failure is indicated by attachment fittings which show signs of pulling away from fuselage structure or failure in a welded area, and bolt holes which are elongated or torn. Welds are particularly subject to failure under tension loads and should be closely inspected.

In aircraft of all metal construction, overloads are usually evidenced by wrinkling of the metal skin, around wing, stabilizer and landing gear attachment points, and deformed or cracked fittings.

Wing struts are in tension during normal flight conditions and when severe vertical currents or gusts are encountered, they may be subjected to heavy loading. The strut attachment points, at the wings and fuselage, should be carefully examined for the indications of failure described for landing gears.

Compression. A part subject to compression loads tends to fail (bulge) at the weakest point in overall length or span, at right angles to the application of the overload.

Compression failures are usually found after a hard landing, flight through turbulent air, or an accident, and affects the same areas referenced under tension in the previous paragraphs. A bulge is indicative of compression failure; however, it is not always noticeable. In this event, a break in protective paint coating may be present. Sheet metal and extruded members will show some form of distortion when damaged by compression. In long members such as wing struts, compression may be first evidenced by what appears to be a bow or bend in the member.

A compression overload of a wood member can usually be detected by a slight ridge across the face of the member at right angles to the direction of the grain.

Torsion is a twisting force that tends to turn one end of a part about a longitudinal axis while the other end is held fast or turned in an opposite direction. Wheels caught in frozen ruts during a landing will tend to twist the landing gear members. Severe air loads imposed during abnormal flight maneuvers or flight through turbulent air may twist the control surfaces or other components. Improper rigging adjustments to wings and tail surfaces may also cause twisting of these components. The inspection, in these cases, is similar to that described for tension and compression overloads.

Certain landing gears employ a torsional member referred to as a "scissor," "nut cracker," or "torque link." Careful inspection should be made of this assembly for loose bolts and cracks, especially after landing in a rough or rutted field.

Shear. An action or stress resulting from forces applied so as to cause a portion of a part to move relatively to another portion in a direction parallel to the direction of the force. This action is normally found in tools such as bolt cutters or sheet metal shears which apply the force and shear the material being worked.

When an overload is applied, the part having the least resistance to the force will be the first to fail. For this reason, bolts, rivets, and clevis pins should be examined for signs of failure. This is especially important when it is found that the overloaded members do not show the usual indications of failure. Failed bolts, clevis pins, and rivets may shear or partially shear and yet appear perfectly normal to the casual observer. To check for this condition, the following hints may prove useful:

1—*Bolts and Clevis Pins*—Removal and inspection is a positive check for condition. Removal of bolts, clevis pins, etc., is especially difficult if deformed or otherwise damaged by excessive shear loads.

2—*Rivets*—Loose or sheared aluminum rivets may be identified by the presence of black oxide which is caused to form rapidly by working of the rivet in its hole. This oxide will seep out from under the rivet head to stain the surrounding surface. Pressure applied to the skin adjacent to the rivet head will help verify the loosened condition of a rivet.

Bending is a force or combination of forces that will cause a rigid member to curve or bow away from a straight line. Overloads which cause bending are usually the result of abnormal landing and flight loads, or improper ground handling of the aircraft. Bent components will result from the following practices: stepping or pushing on lift or other struts; lifting the aircraft by the stabilizer; jacking or placing supports under longerons; overloading cabin or baggage compartments; or exceeding turn limitations of the nose steering mechanism. On fabric-covered airplanes, a bent member can often be detected by looseness or wrinkling of the fabric. Wood or metal skin may become wrinkled, cracked, or distorted.

Heat.

The principal source of heat affecting the aircraft is the powerplant. From the standpoint of inspection, we are interested in two heating methods, direct and indirect, both normally the result of engine operation. Direct heat normally originates from leaking exhaust gases. Indirect heat is that radiated from any hot system or component.

Direct heat. Leaks in components of the exhaust system may permit carbon monoxide to enter the cabin heating system. More severe leaks or failures of exhaust system components may allow the escape of flames into surrounding areas with disastrous results.

To forestall serious hazards, the exhaust pipes, clamps, bolts, braces, and welds should be examined at frequent intervals. Exhaust gaskets must be in good condition. The nuts holding the exhaust pipe or manifold to the cylinder must be properly torqued and safetied. Loose exhaust pipe bracing allows the pipe to vibrate, causes failure at the welds, and leaks from the flange surfaces. Heater muffs or shrouds should be removed to allow inspection of the exhaust system components.

Indirect Heat. Indirect heat radiated or conducted from the engine is carried off by the action of the air stream passing through the cowling. If the air stream is unable to carry the heat away, the resulting high temperatures are harmful to the engine and may cause failure of accessories or other parts of the powerplant assembly. Excessive indirect heat may be indicated by one or more of the following:

1—High oil temperature.

2—High cylinder head temperature.

3—Blistering of the paint covering adjacent parts within the engine compartment.

4—An odor of burned oil or hot rubber during or after engine operation.

5—Auto-ignition upon shut down of the engine (engine tries to continue functioning).

If any of the above indications are observed, immediate steps should be taken to trace the trouble to its source, which is usually loose or leaking engine baffles, improperly fitted cowling, improper rigging of carburetor heat door control, dirty oil coolers and screens, improper grade of oil, or oil leaks. In any case, once indications of excessive heat are found, a detailed inspection should be made by an appropriately rated mechanic or repair station and corrective action taken immediately.

Vibration

Vibration is the source of many malfunctions and defects that occur throughout the life of the aircraft. Not only will vibration affect parts that are loose or poorly installed, but it will also accelerate wear and cause the ultimate failure of others. There are two types of vibration in aircraft operation; low frequency and high frequency.

Low Frequency (usually noticeable vibration). Low frequency vibration is usually caused by a malfunctioning powerplant or propeller, worn engine mounting pads, looseness of the aircraft structure, or improper rigging. The problem causing vibration should be corrected as soon as discovered since it will cause abnormal wear between moving parts of the aircraft and may induce failure in any number of other aircraft parts.

High Frequency (less noticeable vibration). High frequency vibration is caused by inherent vibration characteristics of the rotating masses in the engine and propeller. It can also be caused by aerodynamic forces acting through the propeller or by engine firing impulses. High frequency vibrations are usually charted by special instruments at the time the aircraft is type-certificated by the FAA. When harmful vibration frequencies are found, placards are installed indicating the engine operating ranges which must be avoided.

Factors of Vibration Damage. The factors of vibration damage can be grouped into three categories: fatigue, excessive clearance, and poor installation. These points should be considered when inspecting for the effects of vibration.

Fatigue. Fatigue is the weakening and/or eventual failure of a member due to the cumulative effects of repetitive loads which cause a change in the molecular structure of the part. Fatigue itself cannot be detected or measured while it is taking place except, possibly, under laboratory conditions. Its effects are usually made known by the ultimate failure of a part. The best prevention against fatigue damage is to maintain a smoothly running powerplant. In addition, control excessive or abnormal looseness in other components of the aircraft by good maintenance practices, particularly engine mounting pads which are designed to isolate and absorb vibration.

With the above in mind, it is easily understood why the various components must be properly mounted and secured to resist the damaging effects of vibration. Copper lines are especially susceptible to fatigue and become hard and brittle when subjected to vibration. The lines should be periodically replaced or removed and annealed to restore the original softness.

Excessive Clearance. Excessive clearances accelerate the wear rates of all components in which they exist and can contribute to the initiation of flutter. Flutter is an aerodynamic function, wherein oscillating high loads are imposed on the affected movable surfaces and can result in rapid fatigue failure of critical areas, such as control surface hinge fittings and attachments. Wear rates are extremely high during flutter. It is very important to maintain clearance within the limit established by the manufacturer.

Installation.

Installation, as it is used here, is the proper arrangement of the various parts in relation to each other. A fuel line, for example, may have sufficient clearance relative to another part while at rest, yet under vibration, it may move and make contact with the other part and become chafed or cut.

Ignition or electrical cables in contact with each other may appear perfectly rigid during normal operation, but during periods of vibration they may rub together and wear through the protective casings. Every part of the aircraft should be carefully examined for signs of chafing or cutting. If vibration has gone uncorrected for a time, all nuts, bolts, clamps, etc., should be checked for proper security.

Propeller Vibration

Propellers have inherent vibration characteristics which are not usually harmful but can induce fatigue and in time cause failure of parts essential to the airworthiness of the aircraft. This is one reason why periodic inspection of the aircraft is essential.

A special word about propellers. Quite often a propeller blade becomes nicked, especially at the leading edges. These nicks become points of stress concentration. IT IS IMPORTANT THAT NICKS BE REMOVED AS SOON AS POSSIBLE AND IN A PROPER MANNER. Since the removal of nicks requires special skills and tools and a thorough knowledge of the procedure, such work may be accomplished by certificated personnel only. The importance of correct removal of even small nicks AS SOON AS POSSIBLE after incurring them, cannot be overstressed.

Section 4. INSPECTION DO'S AND DON'TS

DO'S

DO have an assortment of proper tools for inspection.

DO have an inspection check form and a regular inspection procedure. STICK TO IT.

DO remove all inspection plates and cowlings in the area to be inspected.

DO clean all items to be inspected. This is essential in order to clearly see the parts you are inspecting. Inspect before and after cleaning.

DO check all moving parts for proper lubrication and check the "jam" or locking nuts on push-pull controls or adjustment devices for security.

DO familiarize yourself with proper safetying techniques and inspect for proper safetying. Resafety a part you have unsafetied before inspecting the next item.

DO seek assistance in any questionable area. A certificated mechanic, an approved repair station, or your local FAA inspector are your prime contacts. Use them.

DO the job right the first time—save a life—it may be your OWN.

DON'TS

DON'T be hurried—take plenty of time to properly inspect each item. If you don't know what to do next, ASK.

DON'T move the propeller unless the magneto switch reads "OFF," or the ignition system is otherwise rendered inoperative.

DON'T presume an item is airworthy until it has been checked.

DON'T check landing gear by kicking it—raise it off the ground.

DON'T perform any complex inspection or maintenance operation unless you are properly supervised by a certificated mechanic.

DON'T take the attitude—it can't happen to me.

Part II. INSPECTION TECHNIQUES

Section 1. FUSELAGE

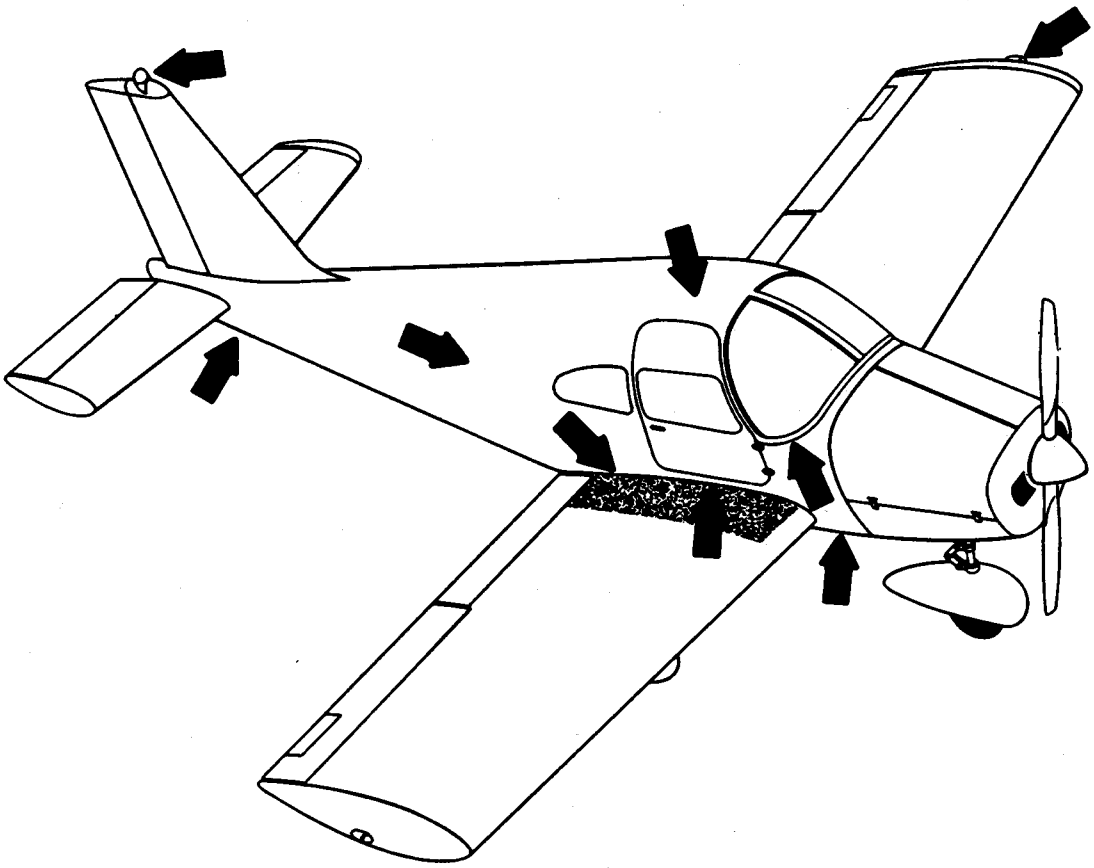

FIGURE 1-1. Inspection chart – fuselage.

Before starting the inspection, be certain that all plates, access doors, and fairings have been opened or removed from the areas to be inspected. When opening inspection plates and cowling, take note of any oil or other foreign material accumulation which may offer evidence of fluid leakage or other abnormal condition that should be corrected. Make note of these items, then thoroughly clean all areas to be inspected.

Examine the interior fuselage structure through access doors and inspection openings. Look for bent longerons or braces, cracked tubing or bulkheads, loose bolts or rivets, and missing safety wire or cotter pins. Carefully inspect the airframe structure using a magnifying glass at the wing, strut, and landing gear attachment fittings. Look for distortion, cracks, poor welds, or elongated bolt holes. Determine that the entire structure is free from corrosion, rust, deterioration, and other defects.

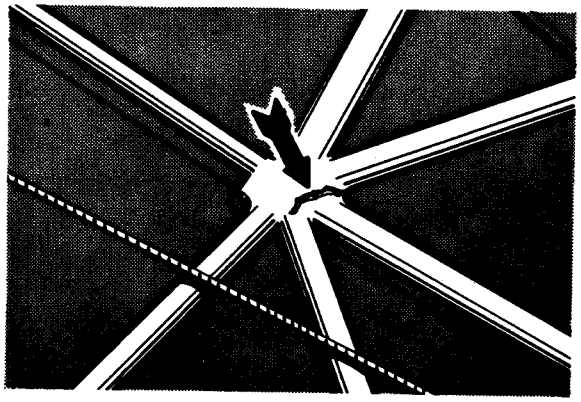

FIGURE 1-2. Cracked fuselage structure.

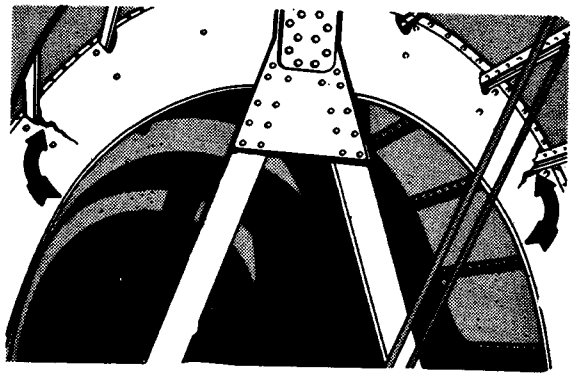

FIGURE 1-3. Cracked former.

Worn or damaged structure, and components that are defective, should be repaired or replaced by persons authorized in FAR 43, and in accordance with the manufacturer's instructions.

Inspect fabric or skin for tears, distortion, deterioration, or other defects. Check the condition of protective coating. Be sure that the fabric or skin attachment to the structure is satisfactory and that there are no pulled or loose rivets, missing or loose screws, or broken rib lacing.

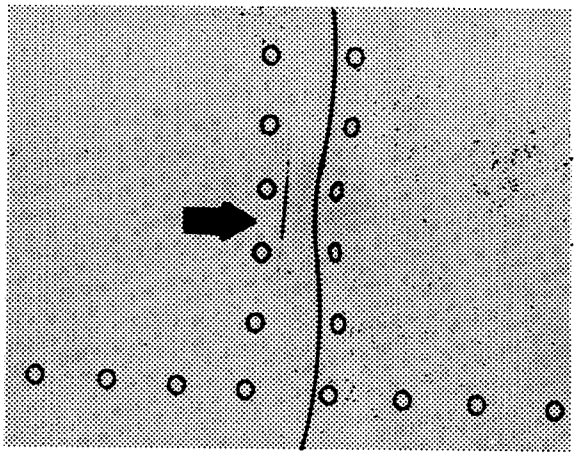

FIGURE 1-4. Distorted fuselage skin.

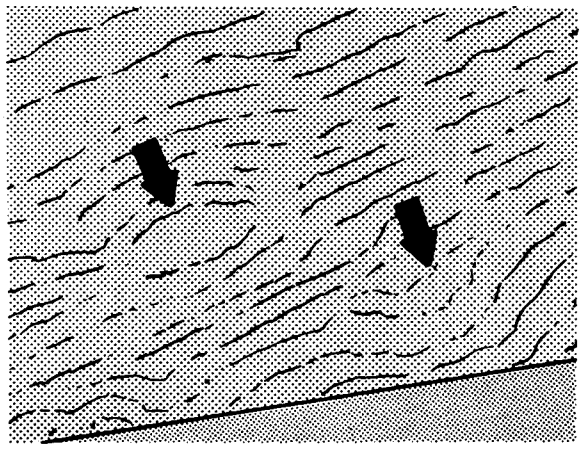

FIGURE 1-5. Deteriorated fuselage fabric.

If the condition of the fabric is questionable, a test should be made by a qualified person to determine if the fabric meets the minimum strength requirements.

Check external bracing and attachment fittings for distortion, cracks, or any other imperfections. Check struts or brace wires for condition and security of attachment. Check

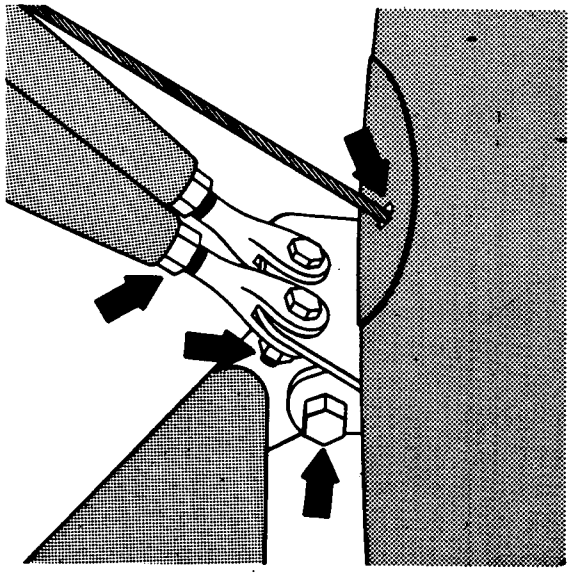

FIGURE 1-6. External wing bracing attachment checkpoints.

adjustable ends for cracks, excessive bearing wear, worn or damaged threads, loose locking nuts, and any other defects. Damaged brace wires or struts should be repaired or replaced in accordance with the manufacturer's instructions prior to further operation.

Examine control system mechanisms for condition and proper operation. Inspect bellcranks for cracks, proper alignment, and security. Rotate pulleys to check for flat spots, to provide new bearing surfaces for cables, and to check for smooth, free operation.

Check control rods for security, freedom of movement, abrasion, distortion, corrosion, and proper alignment through formers and bulkheads. Inspect control rod-ends for cracks, security, evidence of misalignment, and excessive clearance in bearings.

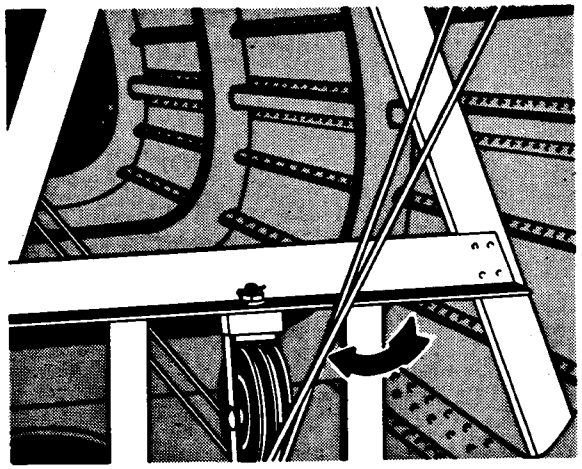

FIGURE 1-8. Improper cable routing.

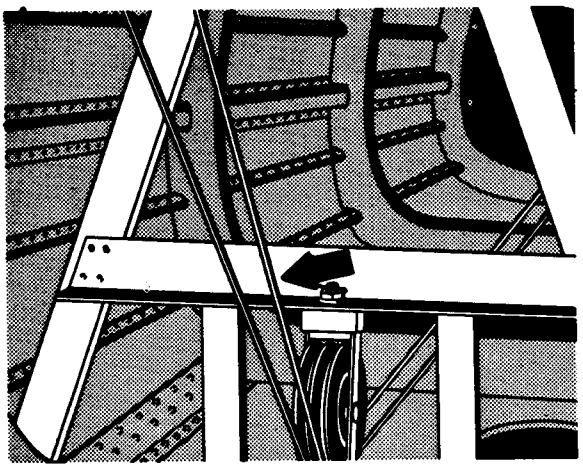

FIGURE 1-7. Proper cable routing.

Check cables for proper tension and routing through fairleads and pulleys. Control cables should be replaced if damaged, distorted, worn, or corroded, even though the strands are not broken. Control rods should be replaced if cracked, gouged, or damaged in any manner other than superficial chafing.

Inspect hydraulic valves, actuators, and boost controls for condition, leaks, security of attachment, freedom of operation, or other defects. Particular attention should be given to flexible hoses carrying fluid under pressure.

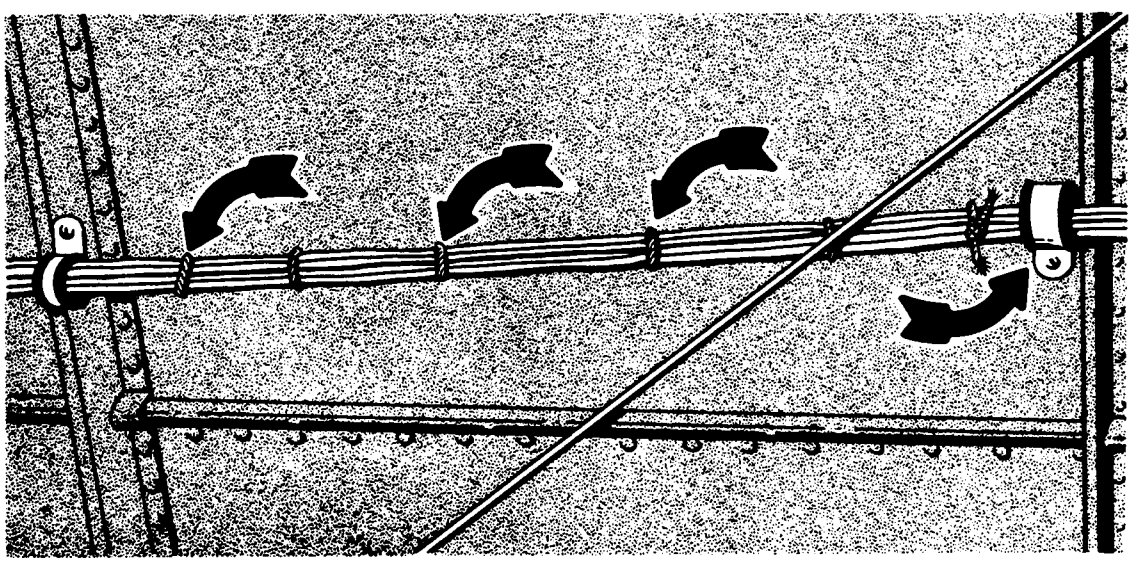

FIGURE 1-9. Proper routing of electrical wiring.

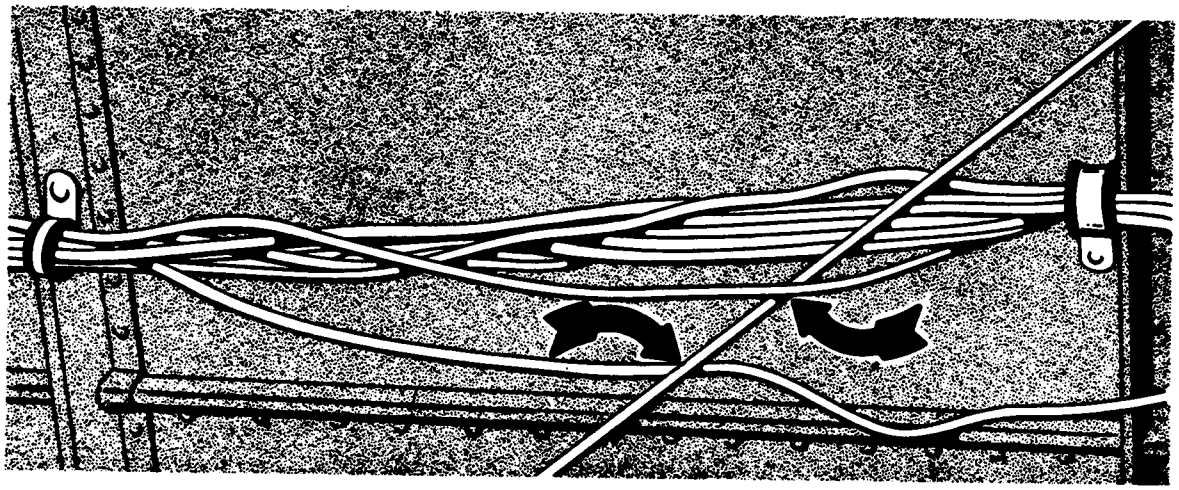

FIGURE 1-10. Improper routing of electrical wiring.

Check electrical wiring for proper installation and security of attachment. Check for chafing and general condition. Inspect installation of grommets, plastic tubing, and connectors. Determine that soldered electrical connections are not deteriorated or corroded, or that terminals are not weak or misaligned. Inspect switches, fuses, and circuit breakers for proper condition and mounting.

Wiring that has been damaged should be replaced and the cause of damage corrected.

Inspect hydraulic system hoses and metalic fluid lines for leaks, dents, kinks, cracks, chafing, and security. Inspect fluid reservoirs for proper fluid level.

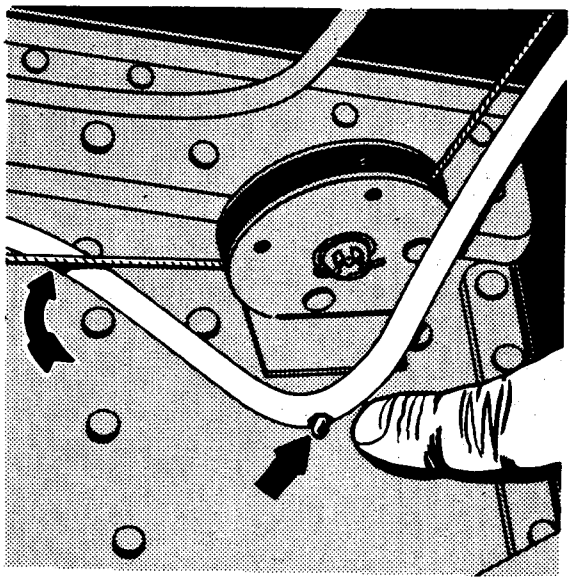

FIGURE 1-11. Leakage from chafed hydraulic line.

When leakage cannot be corrected by tightening connections or replacing packings, a serviceable unit should be installed. Care must be exercised in tightening connections or they may be damaged beyond use.

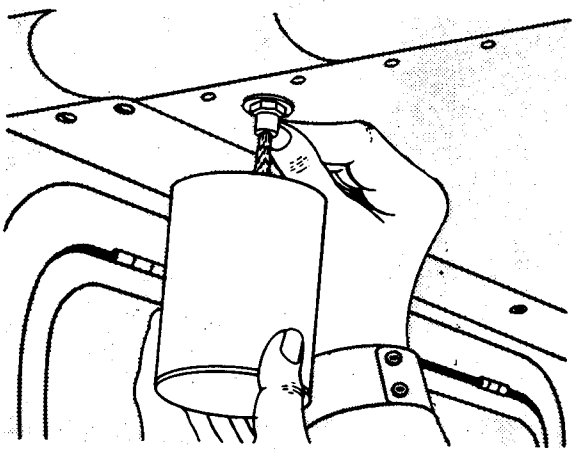

FIGURE 1-12. Draining fuel tank sump.

Inspect fuel tanks and filler caps for proper alignment, security of attachment, and evidence of leaks. Be certain that vents and vent lines are free from obstructions. Examine fuel lines and connections for leaks, cracks, chafing, and security of attachment. Ensure that overflow and drain lines are not kinked or broken, and that they extend beyond the aircraft skin line (overboard).

Fuel systems incorporate fuel tank sumps and sediment bowls to trap water that could pass through the fuel lines to the engine. Periodically drain fuel from the tank sumps and the sediment bowl, and examine for water or other contamination. Replace and safety drain plugs.

Tests have shown that, in some cases, relatively large quantities of fuel must be drained before an indication of water is noted. Determine the characteristics of your aircraft and drain accordingly. The carburetor, fuel lines, and tank sumps should be drained, if an abnormal amount of water is detected in the main fuel strainers.

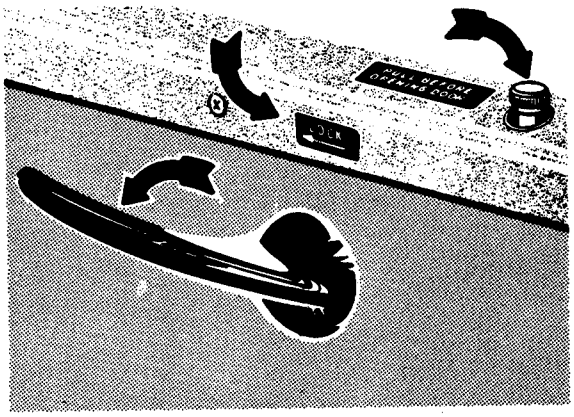

FIGURE 1-13. Doorlock checkpoints.

Abnormal water accumulation is reason to suspect the fuel dispensing system of your fuel supplier. He should be alerted to the presence of water to permit corrective action.

Inspect cabin and cockpit entrance doors and emergency exits for general condition. Check them for ease of operation and for security of attachment. If the aircraft cabin is pressurized, ensure that the door and window seals are intact and in place. Determine that emergency exit placards are clearly legible.

Ensure that the doors and emergency exits can be opened from inside the aircraft, and can be positively locked to prevent inadvertent opening during flight. *Do not use a seal or sealant which will prevent operation of emergency exits!* Follow the manufacturer's recommendations exactly.

Examine baggage compartment for general condition. Inspect floor for defects. Check door hinges and locks for condition and satisfactory operation.

Inspect fuselage or hull for damage and defects, such as corrosion, deterioration, loose rivets and screws. Inspect skin seams for separation. Accumulations of liquids should be drained. The presence of any appreciable amount of liquids will affect the aircraft's center of gravity. Be certain that all drain plugs have been reinstalled and safetied.

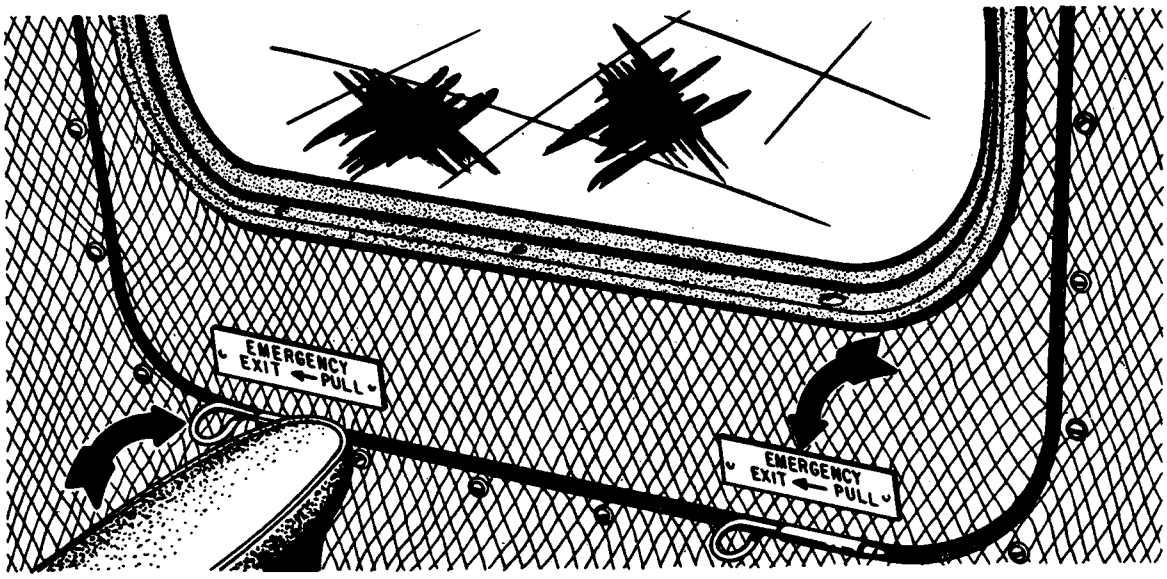

FIGURE 1-14. Emergency exit checkpoints.

Whenever a panel is removed for interior inspection, check the condition of all panel fasteners. Check the opening edges and the panel for cracks. All accessories should be inspected for security and, if movable parts are involved, for freedom of movement. Figure 1–15 shows the interior of the aft fuselage of a light twin. Observe the mounting of the emergency locator transmitter, "A," and the yaw damper, "B."

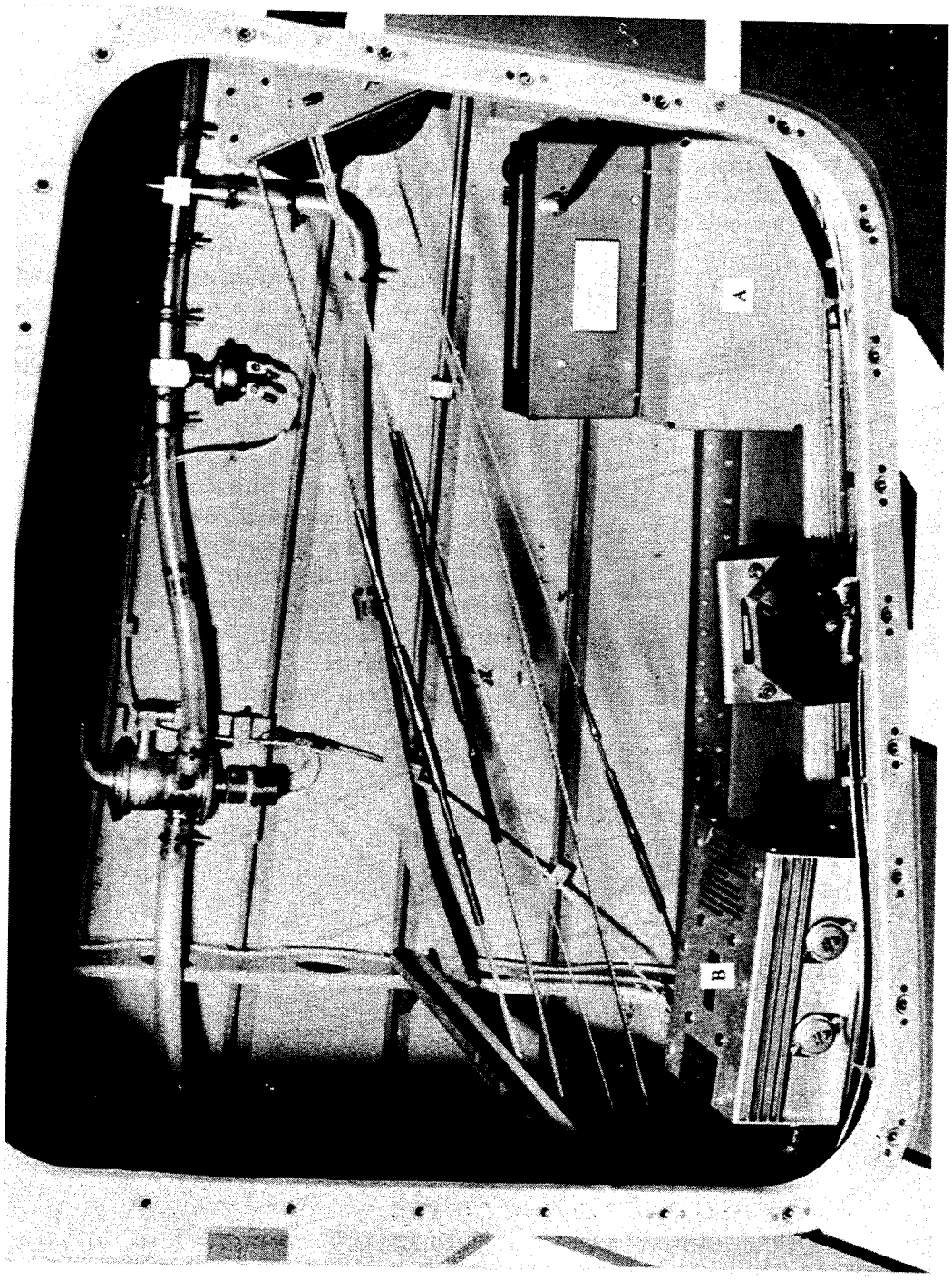

A. Emergency locator transmitter.
B. Yaw damper.

FIGURE 1-15. Interior aft fuselage (light twin)

Section 2. CABIN-COCKPIT

Inspect cabin and cockpit for general condition, cleanliness, and presence of loose articles which might interfere with the controls or other systems. Using a flashlight, inspect below and behind the instrument panel for loose or chafing wires, instrument line leaks, and any other defect. Check operation of controls for possible interference, full travel, abnormal wear, or other defects.

Examine the fire warning and detecting system for security of attachment and general condition. Ensure that wires connecting the sensing devices and the indicating instrument show no evidence of chafing or deterioration.

Inspection and maintenance of fire extinguishers should be in accordance with the manufacturer's instructions attached to the extinguisher unit. Ensure that the extinguisher is fully charged. Inspect for general condition and security of attachment.

Inspect the cabin heating and ventilating system for leakage and condition of units, lines,

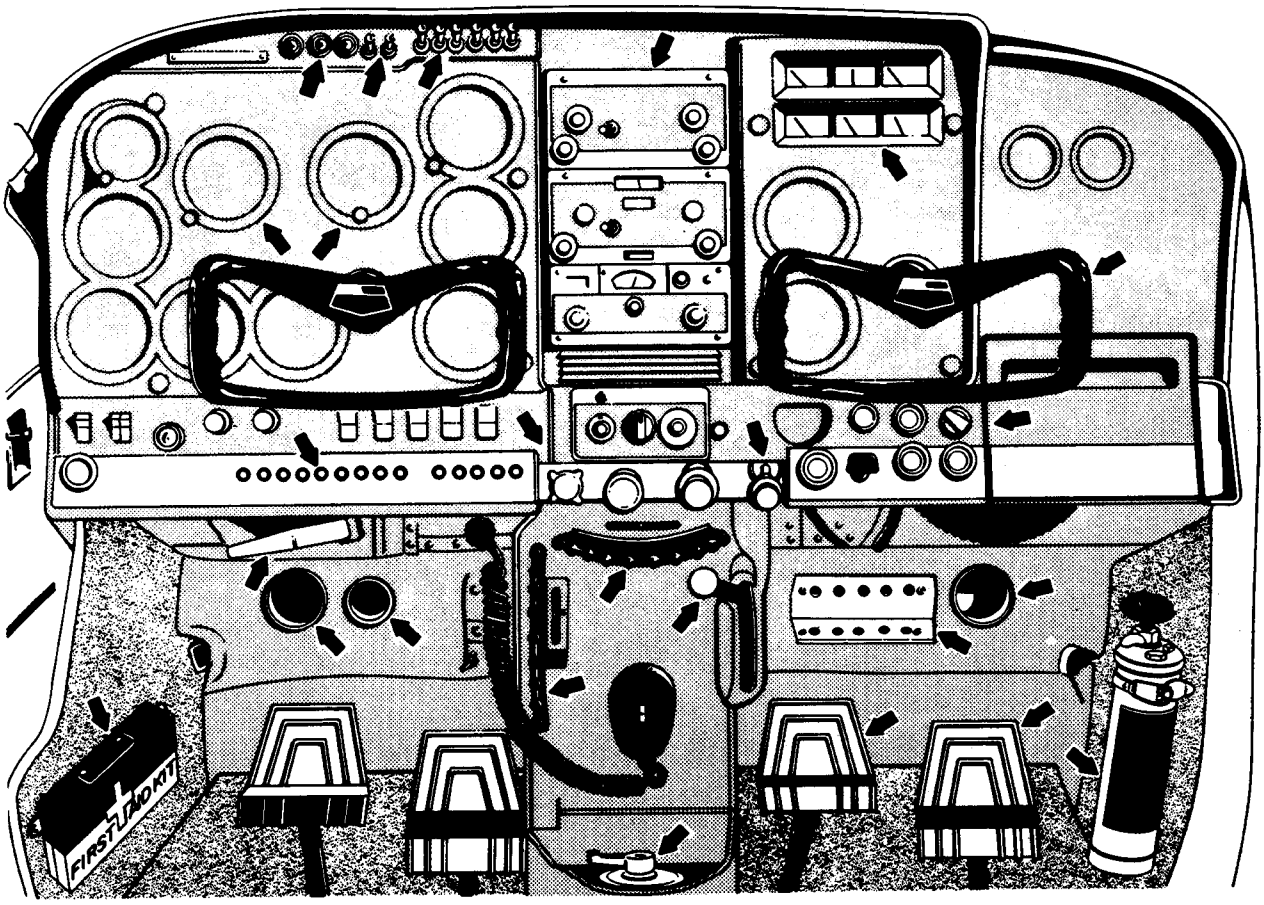

2-1. Inspection chart – cockpit.

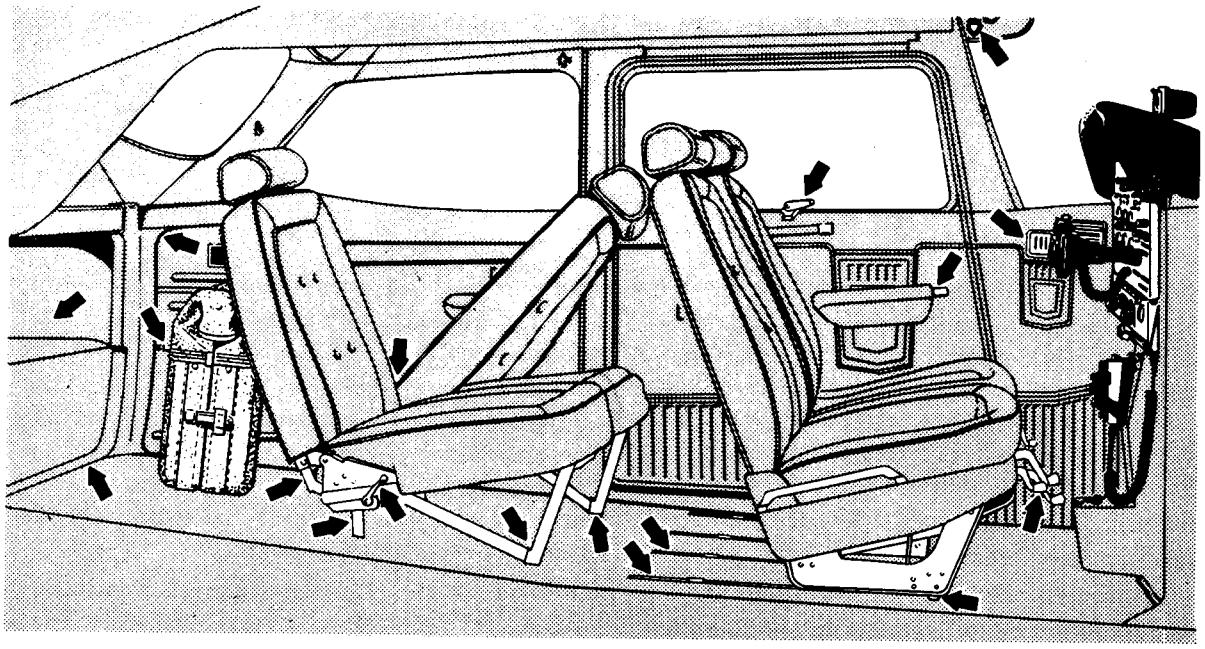

2-2. Inspection chart – cabin.

and fittings. Check system operation by moving the controls to make certain they function properly.

Carefully observe that no flammable material is in the vicinity of the heaters and exhaust lines or ports.

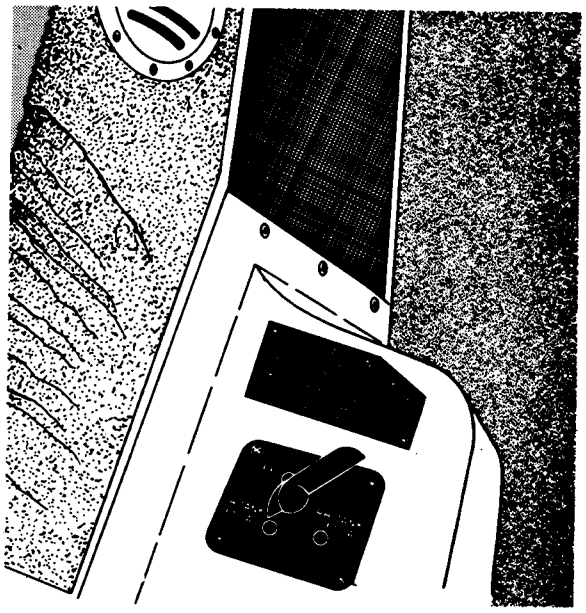

FIGURE 2-3. Operational check – fuel tank selector valve.

Check fuel selector valves for leaks, freedom of movement, positive detents, smooth operation, security of mounting, and placards. Any defects noted should be corrected immediately by a person authorized in FAR 43.

Check engine primer assembly for leaks and operation. Inspect the entire fuel system for general condition, mounting, and freedom from leaks.

Inspect electric wire bundles for general condition, chafing, and routing. Examine connections at terminals, junction boxes, cannon plugs, and clips for looseness and defects. Check condition of circuit breakers, fuses, switches, voltage regulators, and reverse current relays.

Fuse clips (including spares) must be free from corrosion and hold fuses securely, yet permit easy removal. Replace burned out fuses with fuses of proper type and capacity. Replace any fuses used from the supply of spare fuses.

Inspect the hydraulic system reservoir for general condition, security of attachment, and proper fluid level. Examine the pressure accumulator for defects. Check pumps for security of mounting and condition. Inspect

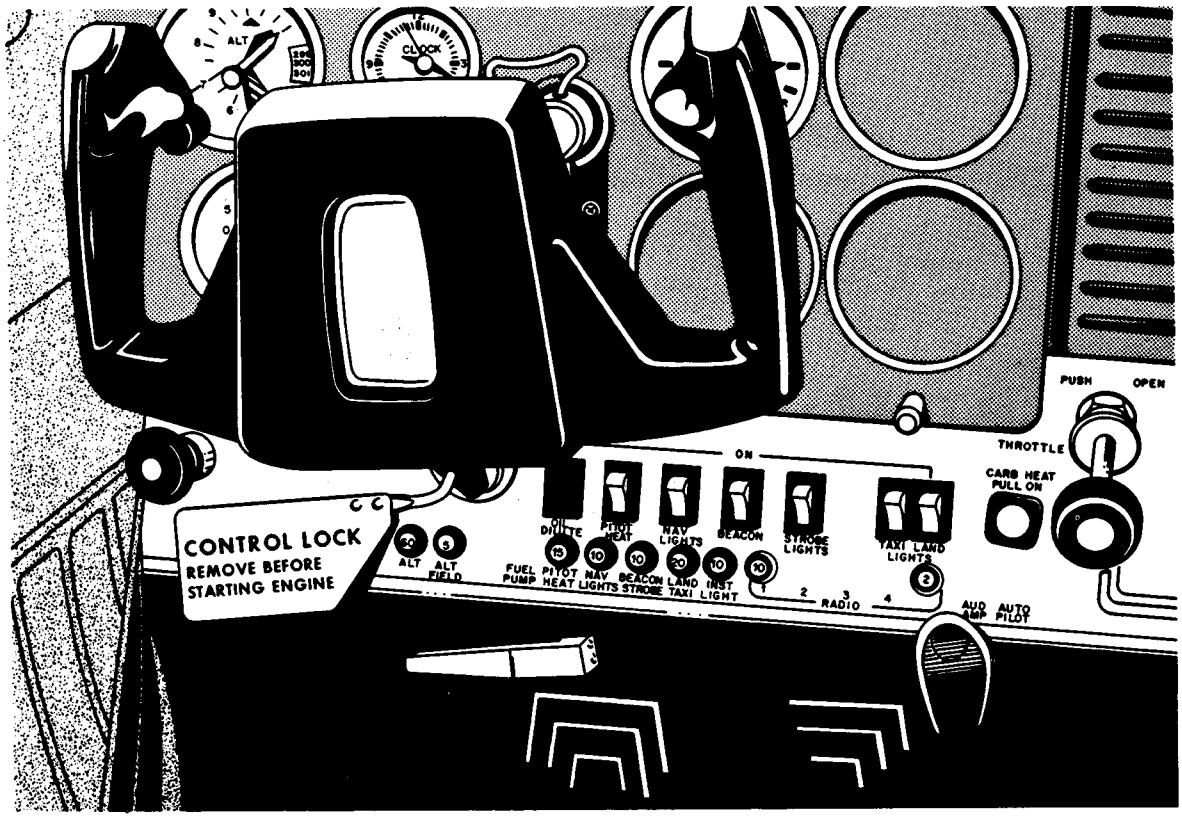

FIGURE 2-4. Circuit breaker and fuse panel.

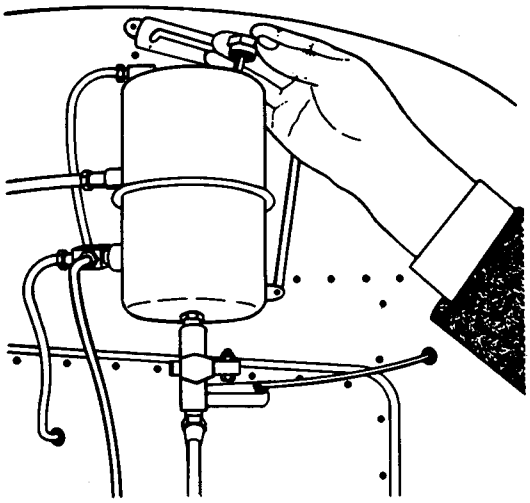

FIGURE 2-5. Check quantity hydraulic fluid.

bypass valves and relief valves for leaks. Ensure that lines are properly secured and free from leaks, dents, kinks, cracks or chafing. Check hydraulic brake master cylinder for fluid level and leaks.

Air and dirt in hydraulic systems are the most frequent causes of faulty operation. Air causes faulty release, irregular pressure, and noisy operation. Dirt and grit affect valve operation and produce leakage by cutting the various packings throughout the system.

When replenishing hydraulic fluid, NEVER mix dissimilar hydraulic fluids. This "mixing" can result in complete system failure. Avoid spilling fluid when servicing hydraulic systems since some of these fluids severely damage paints and electrical insulation material.

Inspect all instruments for security of attachment, cleanliness, legibility of dial markings, security of glass dial covers, proper markings, and general appearance. The magnetic compass should be checked regularly for proper fluid level and accuracy. Check instrument panel indicating and warning lights for operation, condition, and security. Replace inoperative indicator bulbs. Vacuum lines that

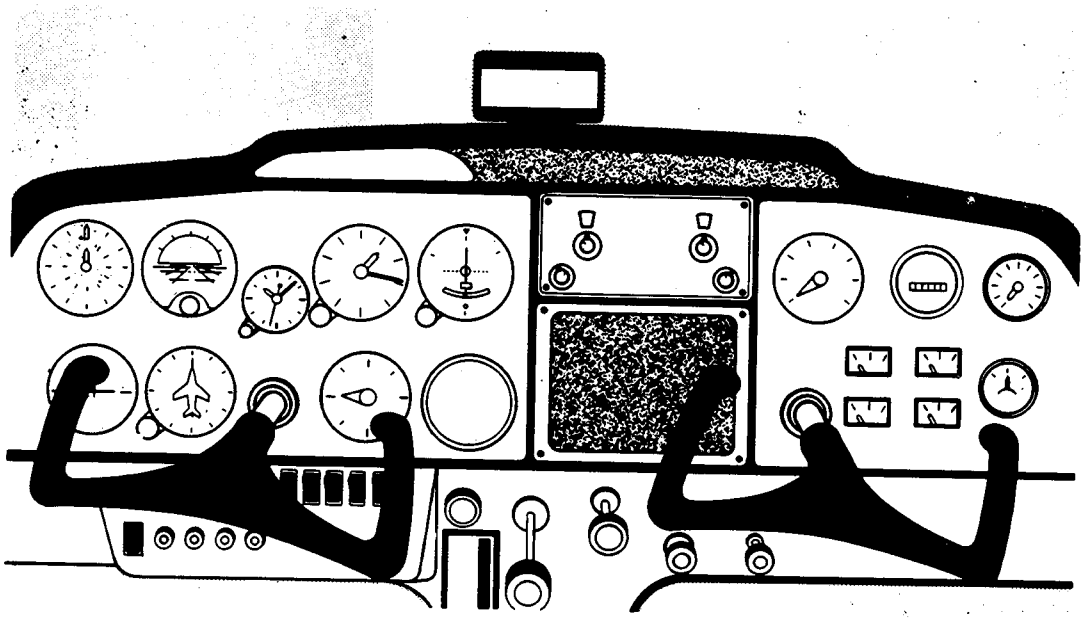

FIGURE 2-6. Instrument panel.

show signs of deterioration should be replaced. Inspect the instrument panel for freedom of movement and the shock mounts for signs of deterioration. If the instrument panel is equipped with shock mounts, the panel should not come in contact with any part of the aircraft structure, line, or component, rigidly attached to the aircraft structure.

When suspected of malfunctioning, the flight instruments should be removed and bench tested by a certified repair station or tested with a portable ground test unit. A periodic check of vacuum operated instruments is recommended to detect erratic operation. Dirty filters should be replaced. Known or suspected malfunctioning instruments should be removed and replaced, prior to further operation of the aircraft.

Inspect all controls linkages for proper functioning and general condition. Check cables for frayed strands and proper tension. Examine pulleys and fairleads for misalignment, breakage, or looseness. Inspect bellcranks and torque tubes for alignment, cracks, freedom of movement, and proper safetying. Determine that the pulleys and fairleads, through which the control cables pass, are clean and that the

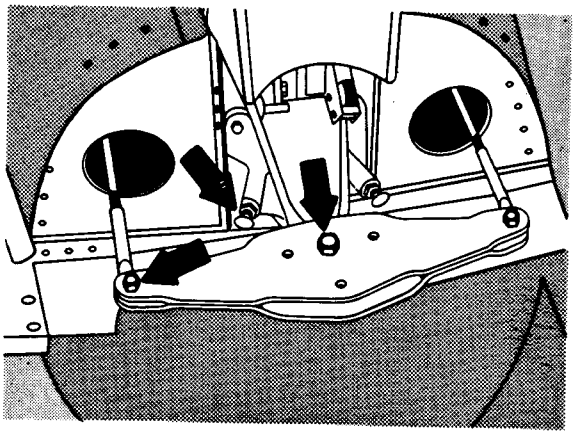

FIGURE 2-7. Bellcrank checkpoints.

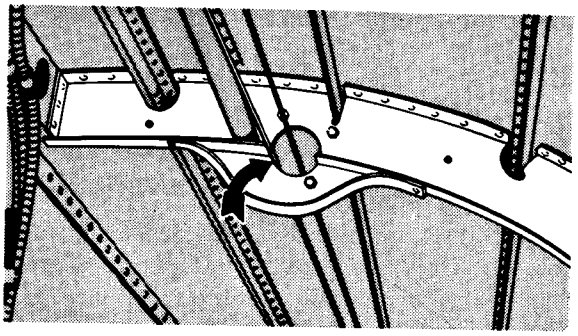

FIGURE 2-8. Cable rubbing bulkhead.

surrounding structure does not interfere with their movement. Operate the controls to be sure there is no lost motion, binding, or chafing.

If inspection reveals that cables or control rods have been chafing against some portion of the structure, they should be realigned. If further inspection reveals the cables or control rods to be worn beyond an acceptable limit, they should be replaced.

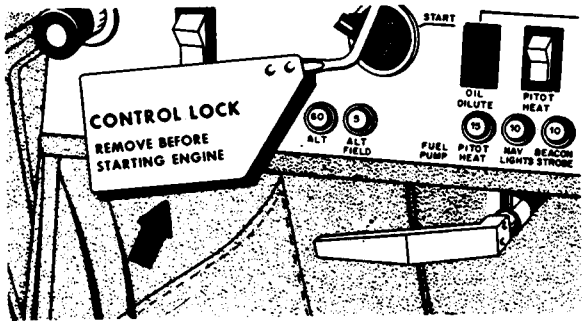

FIGURE 2-9. Gustlock.

Inspect gust locks for condition. Ensure that they release completely and cannot inadvertently engage.

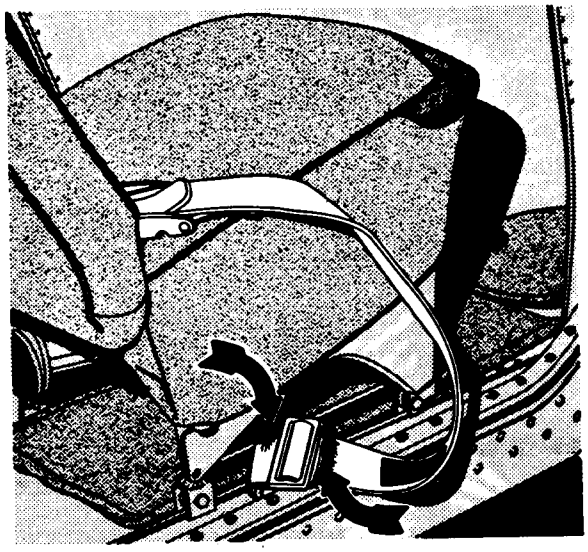

FIGURE 2-10. Frayed safety belt.

Safety belts and shoulder harnesses that show evidence of cuts or fraying should be removed and replaced with approved-type belts.

FIGURE 2-11. Safety harness.

Inspect all safety belts and shoulder harnesses for excessive exposure to the deteriorating effects of sunrays, acid and dirt. Make certain the latching devices are in good condition and operating satifactorily. Ensure that all fittings and attachment parts are secure and in good condition.

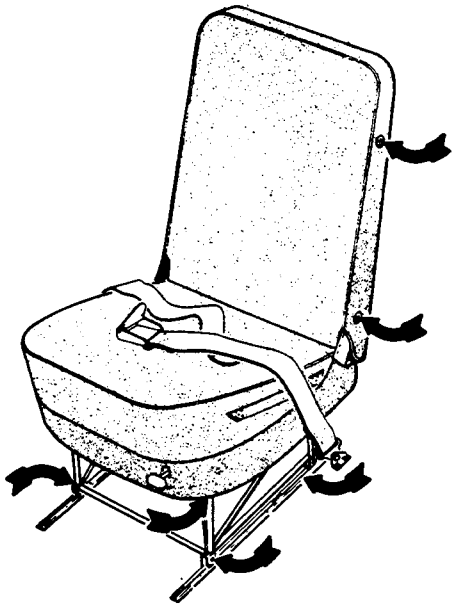

FIGURE 2-12. Inspection items on seat.

Inspect all seats and seat tracks for security of attachment, condition, and function of adjusting mechanisms. Floor carpets should be removed to permit inspection of the floor and associated structures to which seat and seat tracks are attached. This is the appropriate time to remove floor access covers and inspect floor substructure, controls, etc., below the floor.

Inspect all windows, windshield, and canopies for cracks, cleanliness, freedom of operation, and general condition. If your aircraft is pressurized, even minor flaws in windows, their attachments, and operating mechanisms can be critical. If there is any question, acquire the services of a certificated mechanic or repair station.

Section 3. ENGINE NACELLE

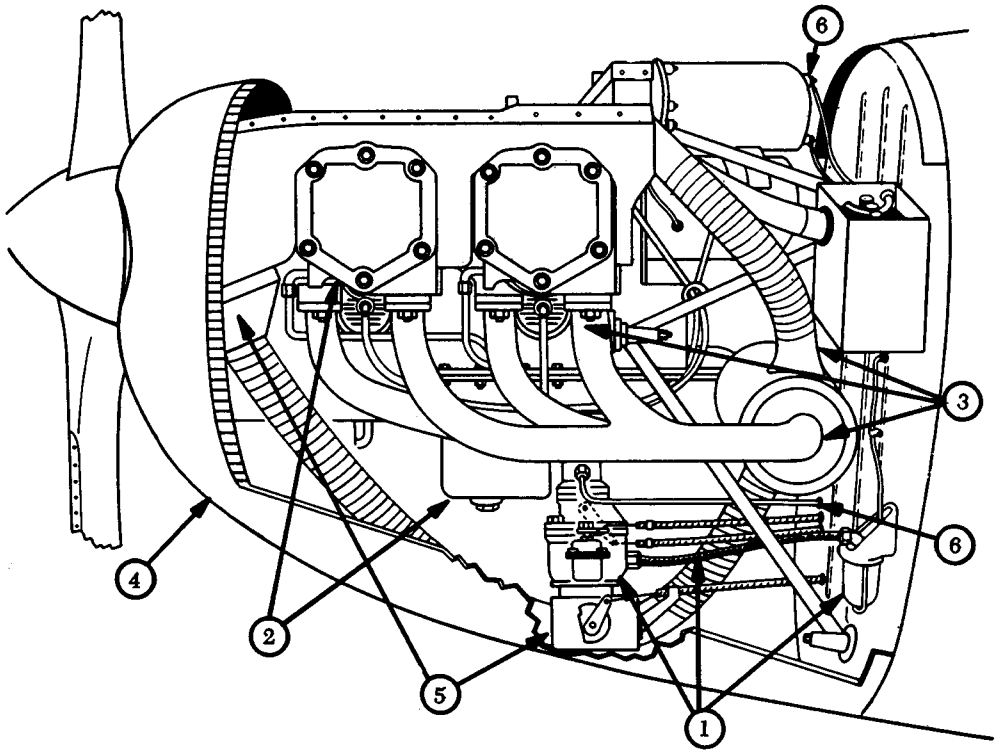

FIGURE 3-1. Inspection chart – engine and nacelle.

1. **FUEL SYSTEM**—Look for signs of fuel dye which indicates a fuel leak. Visually check a small amount of fuel in a clear container, and drain sumps for water.
2. **OIL SYSTEM**—Check for indication of leaks. Check oil quantity.
3. **EXHAUST SYSTEM**—Check for gray-white stains, which are indications of exhaust leaks at the cylinder head or cracks in stacks. Check condition of heat muffs for cracks or leaks.
4. **COOLING AIR SYSTEM** (cowling and baffles) —Check for cracks in cowling and baffles. Check for proper positioning of baffles, condition of seals, and security of fasteners.
5. **INDUCTION AIR SYSTEM** (air filter)—Check for proper installation, condition, cleanliness, possible restrictions to airflow, and system air leaks.
6. **OTHER SYSTEMS**—Check for proper installation and for cleanliness.

Remove and inspect the fuel strainer screens for damage and water or dirt contamination. Clean screens, replace, and safety.

When reassembling the fuel strainer bowl, care must be exercised when tightening the bale wire. Insufficient tightening may result in leakage; excessive pressure may damage the bowl. Be sure trapped air is eliminated, ensuring unrestricted fuel flow. With fuel

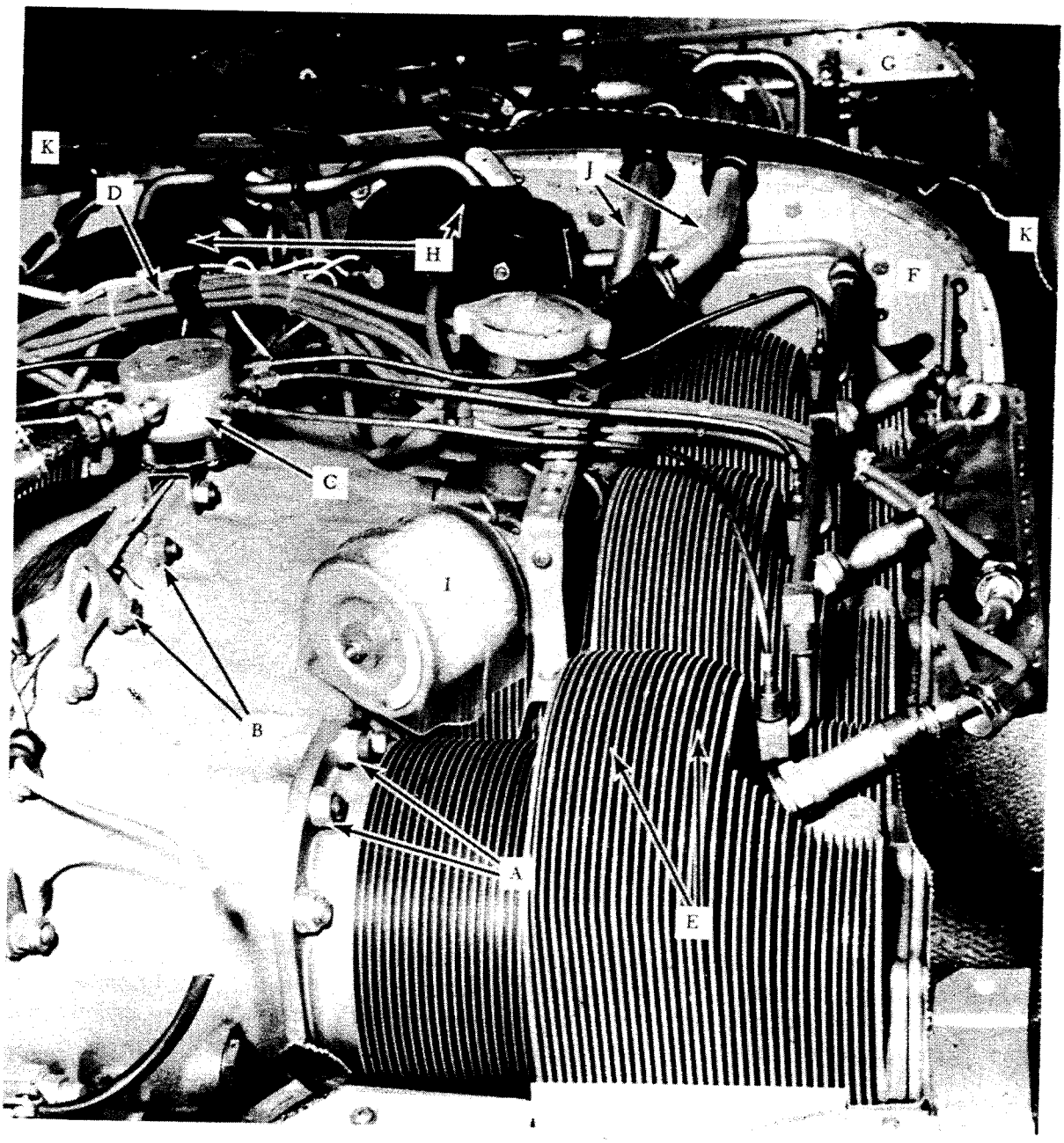

A. Cylinder hold-down nuts.
B. Crankcase thru-bolts.
C. Fuel injection distributor.
D. Ignition harness.
E. Cylinder cooling fins.
F. Firewall.
G. Accessory section.
H. Magnetos.
I. Instrument system pressure filter.
J. Oil lines.
K. Cowling seals.

FIGURE 3-2. Inspection chart — engine.

selector and boost pump on, check the fuel strainer for leaks. Inspect fuel lines and connections for leakage, cracks, kinks, chafing, and security of mounting. Examine hoses and clamps for tightness and condition. Ensure that fuel lines do not interfere with adjacent equipment or lines.

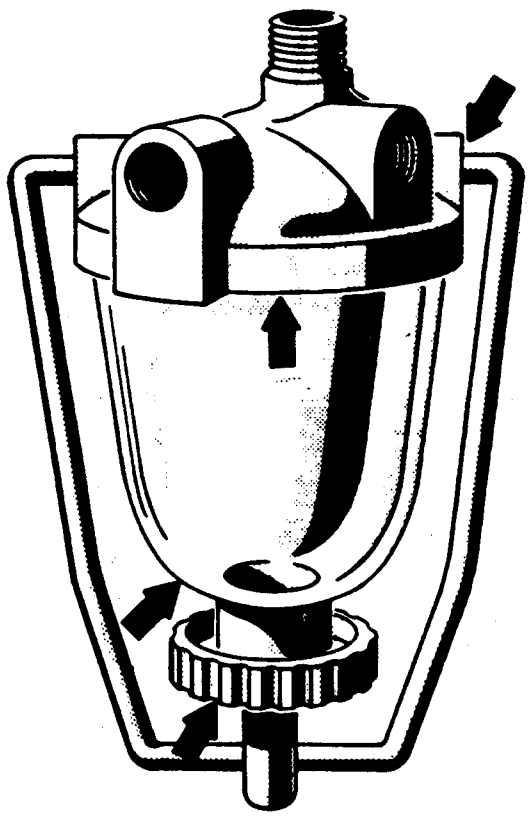

FIGURE 3-3. Fuel strainer checkpoints.

Examine the primer system for general condition and perform an operational check. Inspect for leakage and security of attachment. Ensure that all conections are tight. Copper primer lines should be periodically annealed to relieve brittleness, by a person authorized by FAR 43.

Inspect the carburetor for general condition, security of attachment, and defects. Inspect for excessive wear at throttle shaft, link assemblies, and hot air butterfly shaft bearing points. Wear can affect the fuel-air mixture resulting in erratic engine operation. Inspect

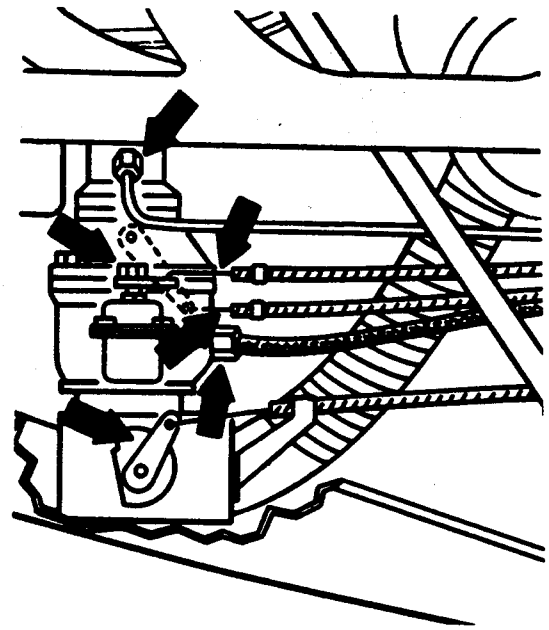

FIGURE 3-4. Carburetor inspection points.

for leaks due to damaged gaskets, loose fittings, or damaged fuel lines. Drain carburetor bowl and examine the gasoline for presence of water or other contamination. Remove and clean carburetor screens and inspect for damage. Flush carburetor by turning fuel supply on momentarily. Replace screens and drain plugs and ensure they are properly safetied.

Remove the carburetor air filter. Clean and inspect for defects. Inspect all air ducts for condition, alignment, and security. Reinstall filter.

Inspect the carburetor air heater for condition and security. Operate the controls through the full travel range. If a questionable condition is found, contact a certificated repair station, mechanic, or the manufacturer for repairs.

The air filter and air heater are critical inspection items. Either can restrict the intake airflow and result in loss of engine power. Follow manufacturer's instructions at all times.

Examine intake manifolds for general condition, cracks, kinks, and evidence of leakage. Ensure that upper and lower packing nuts are tight and not leaking.

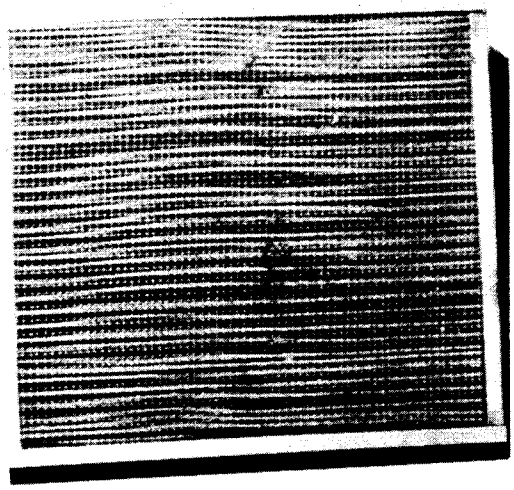

A. Before cleaning.

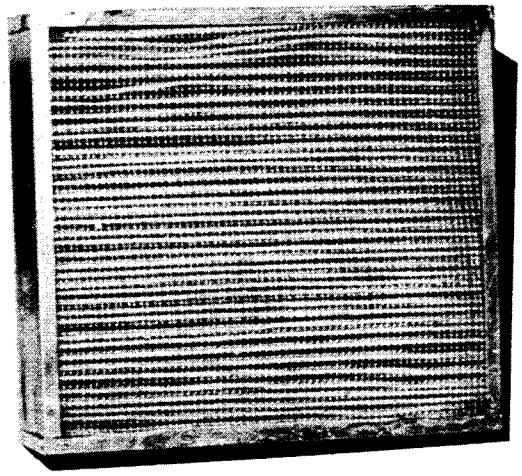

B. After cleaning.

FIGURE 3-5. Carburetor air filters.

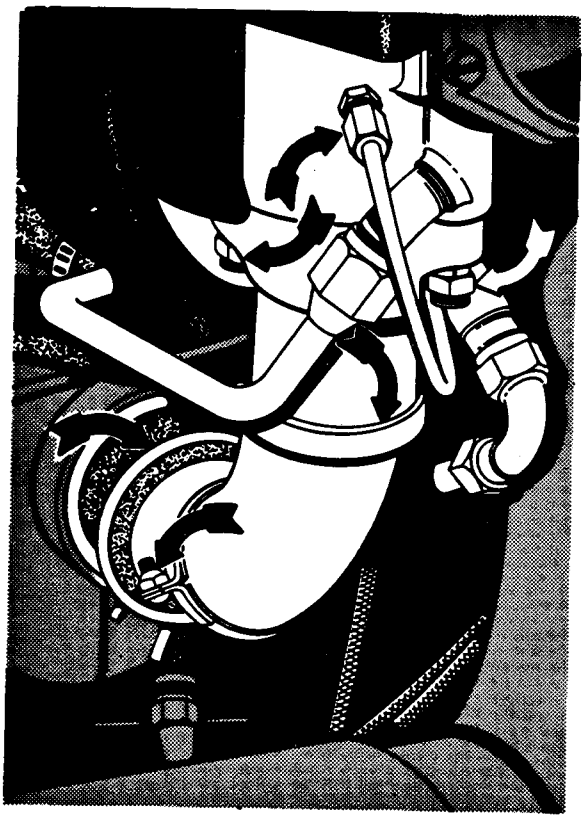

FIGURE 3-6. Intake manifold checkpoints.

If leaks around the intake pipe packing nut cannot be corrected by tightening the nut, the packing must be replaced. Use approved parts when replacements are necessary. Replacement must done by persons authorized in FAR 43.

Inspect the oil tank for evidence of cracks or oil leaks, especially around welded seams

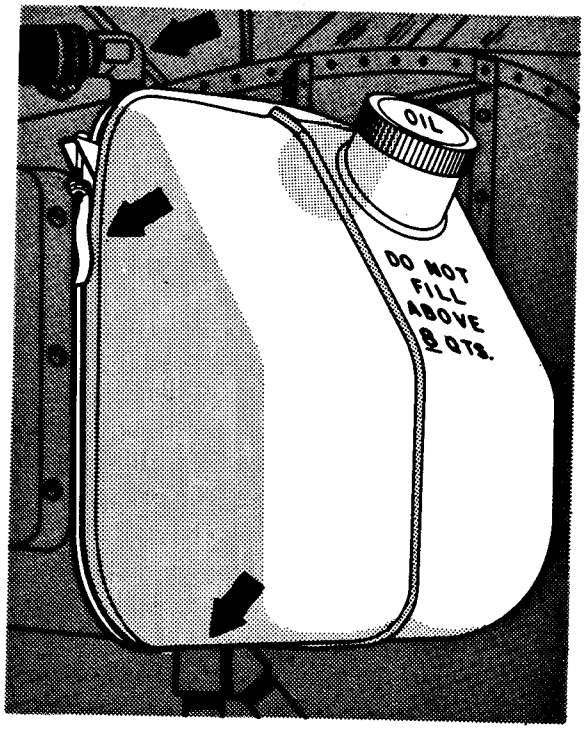

FIGURE 3-7. Oil tank inspection.

and fittings. Leaks should be traced to their source and corrected.

Check the oil tank retainer straps for evidence of chafing and for security of attachment. If chafing has occurred or the proper security cannot be obtained, antichafe pad replacement is necessary.

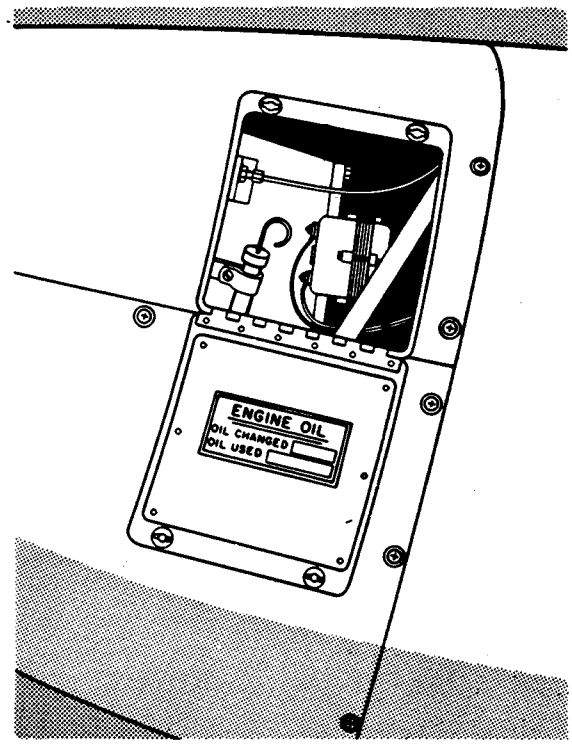

FIGURE 3-8. Oil quantity check.

On wet sump engines, inspect the sump for evidence of leaks. Remove oil sump plug and inspect for foreign particles. Remove, inspect, and clean oil sump strainers. Reinstall drain plugs and strainers, and safety immediately. The presence of metal particles usually indicates an internal failure. It will be necessary to make a thorough internal inspection of the engine which, in most cases, requires a complete engine disassembly. Fill the system with the type and grade of oil recommended by the manufacturer, for the climatic conditions to be encountered.

Inspect oil lines for leakage and security of attachment, particularly at connections. Oil hoses should be inspected for exterior checks

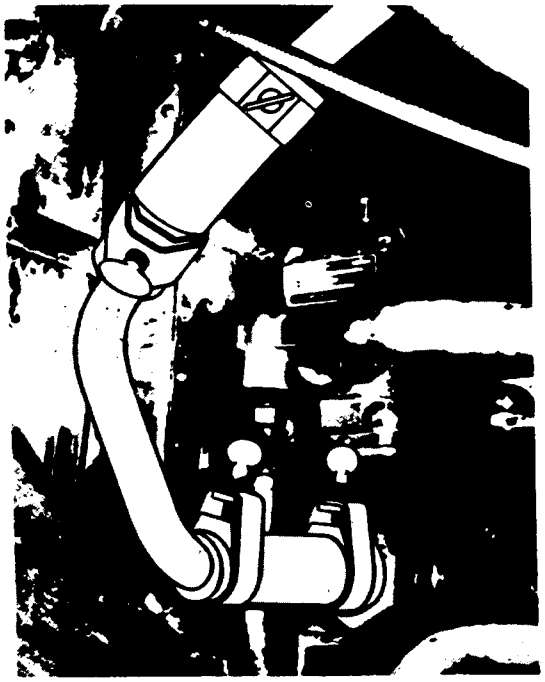

FIGURE 3-9. Satisfactory oil line installation.

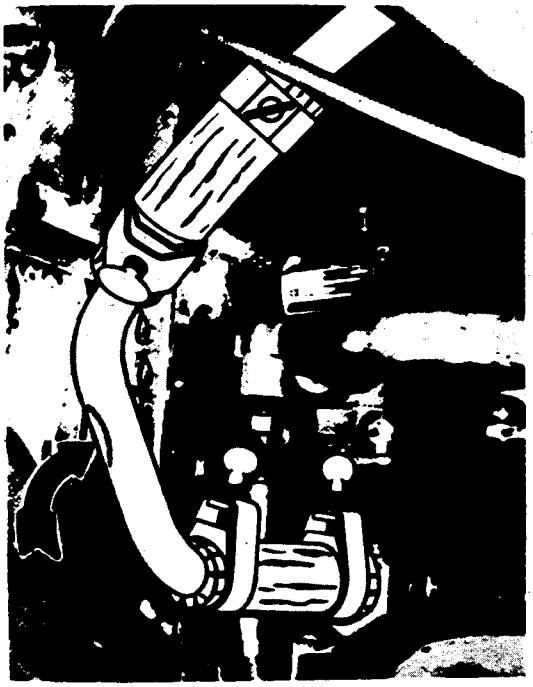

FIGURE 3-10. Unsatisfactory oil line installation.

and cracks, and proper tension and location of clamps. Any leaks must be repaired immediately.

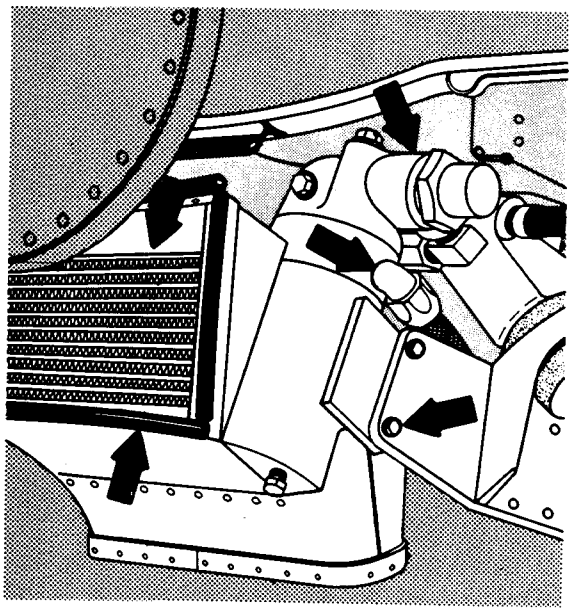

FIGURE 3-11. Oil-cooler checkpoints.

If the lubrication system incorporates an oil cooler or radiator, examine it very carefully for leaks, defects, and security of mounting. Any leaks or defects will require replacement of the unit before further service.

Using a torque wrench, check the tightness of the spark plugs to the torque recommended by the manufacturer.

Examine ignition wiring and connections for general condition. Inspect spark plug barrels, elbows, and knurled nuts for proper tightness. Inspect shielding and bonding for condition and security.

Periodically inspect spark plug "cigarettes" for cleanliness, cracks, and broken spring contacts. Figure 3–13 shows a burned spark plug cigarette. For maximum efficiency of the ignition system, this spark plug cigarette should be replaced.

CAUTION

If your engine is a gas-turbine type, its ignition system is entirely different from that used on reciprocating engines. Work on turbine engine ignition systems can result in SEVERE BODILY INJURY OR DEATH due to electrical shock, unless you are fully familiar with recommended procedures. Figure 3–14 shows the normal condition of a gas turbine igniter plug and illustrates how they differ from spark plugs

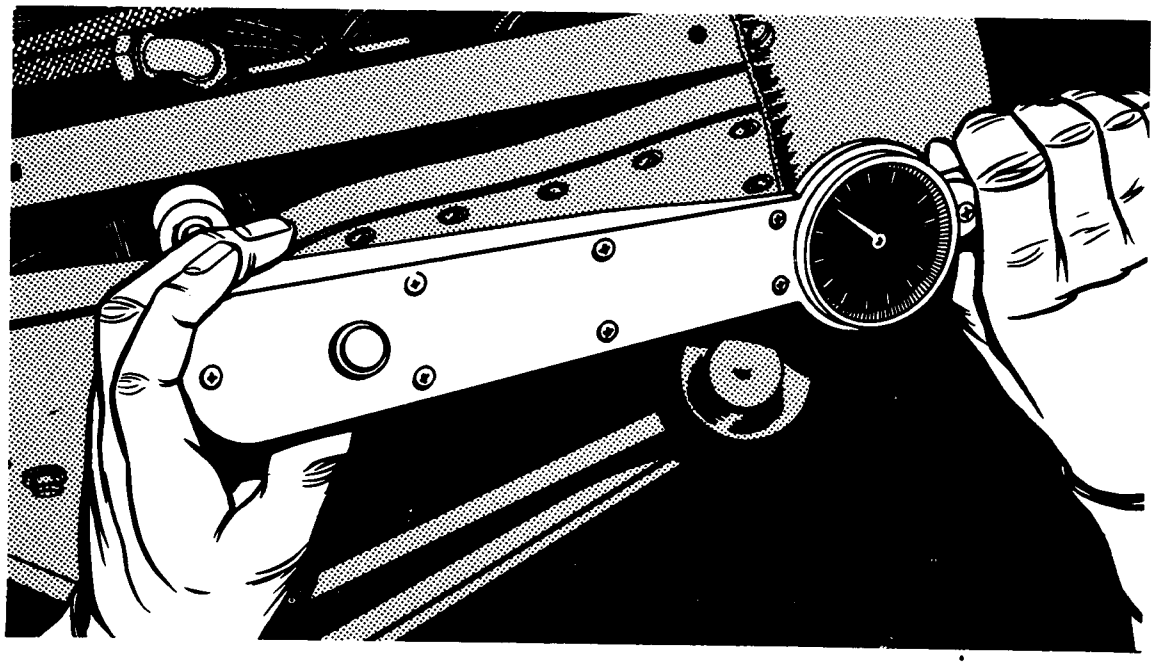

FIGURE 3-12. Checking sparkplug torque.

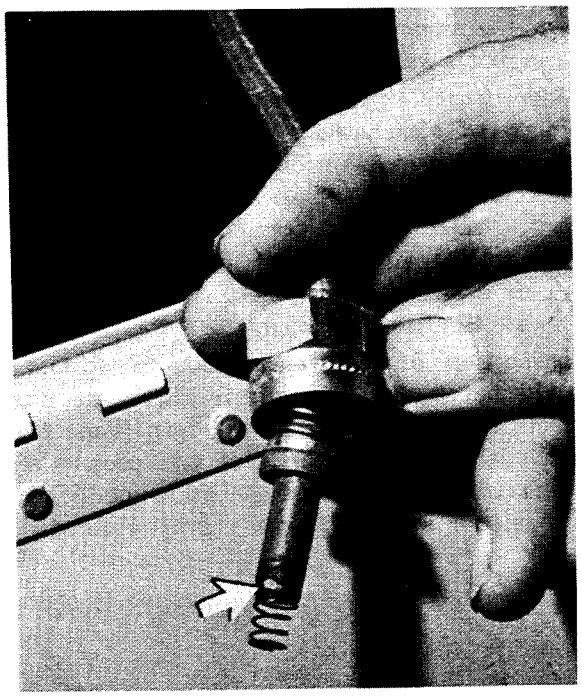

FIGURE 3-13. Unsatisfactory sparkplug cigarette.

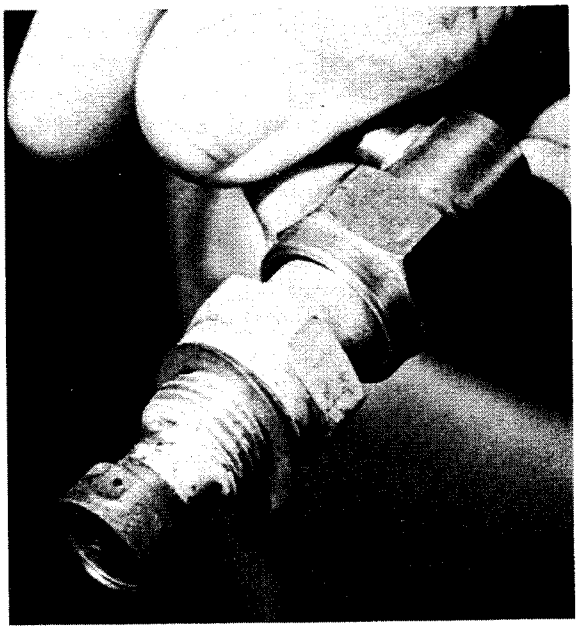

FIGURE 3-14. Igniter plug – gas turbine engine.

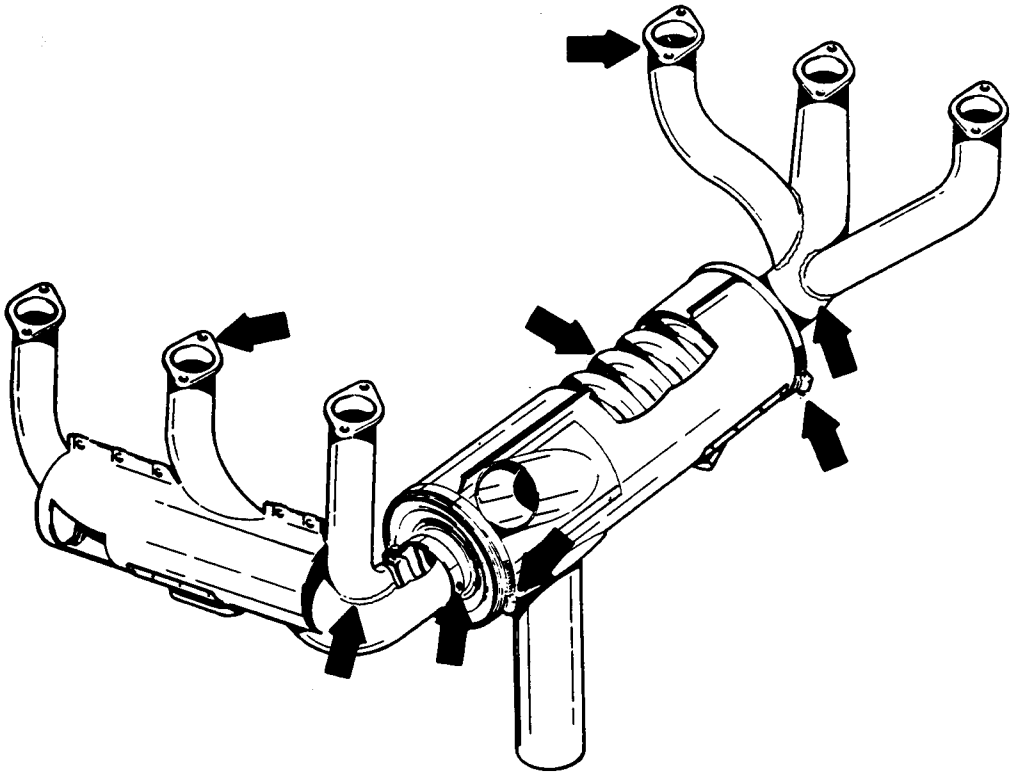

FIGURE 3-15. Exhaust manifold checkpoints.

Be certain that the magneto holddown nuts are tight and properly safetied. If the holddown nuts are loose, it will be necessary to check the magneto timing to make sure it has not been disturbed and technical assistance should be sought. Inspect magneto and cover screws for security.

Check magneto ground wires for condition and proper attachment to the magneto terminal and the ignition switch. If the magneto is not properly grounded, it is possible for the engine to operate, even though the magneto switch is in the "OFF" position. A check of this "OFF" position should be made a regular part of each engine shut down after each flight. BEWARE OF THE PROPELLER, even when the switch is "OFF"—especially when the engine is warm.

Inspect each exhaust stack for condition and security of attachment. Examine the entire collector ring or manifold for cracks, failure of the joints, or other indications of deterioration. Check that no portion of the engine cowling has been in contact with the collector ring or stacks. Be certain that all support bolts are tight and safetied.

Inspection of the engine exhaust system should be thorough to ensure there are no defects that might permit an open flame to enter the engine compartment and present a fire hazard. Exhaust leakage can be identified by flame or smoke "tracks" (gray-white de-

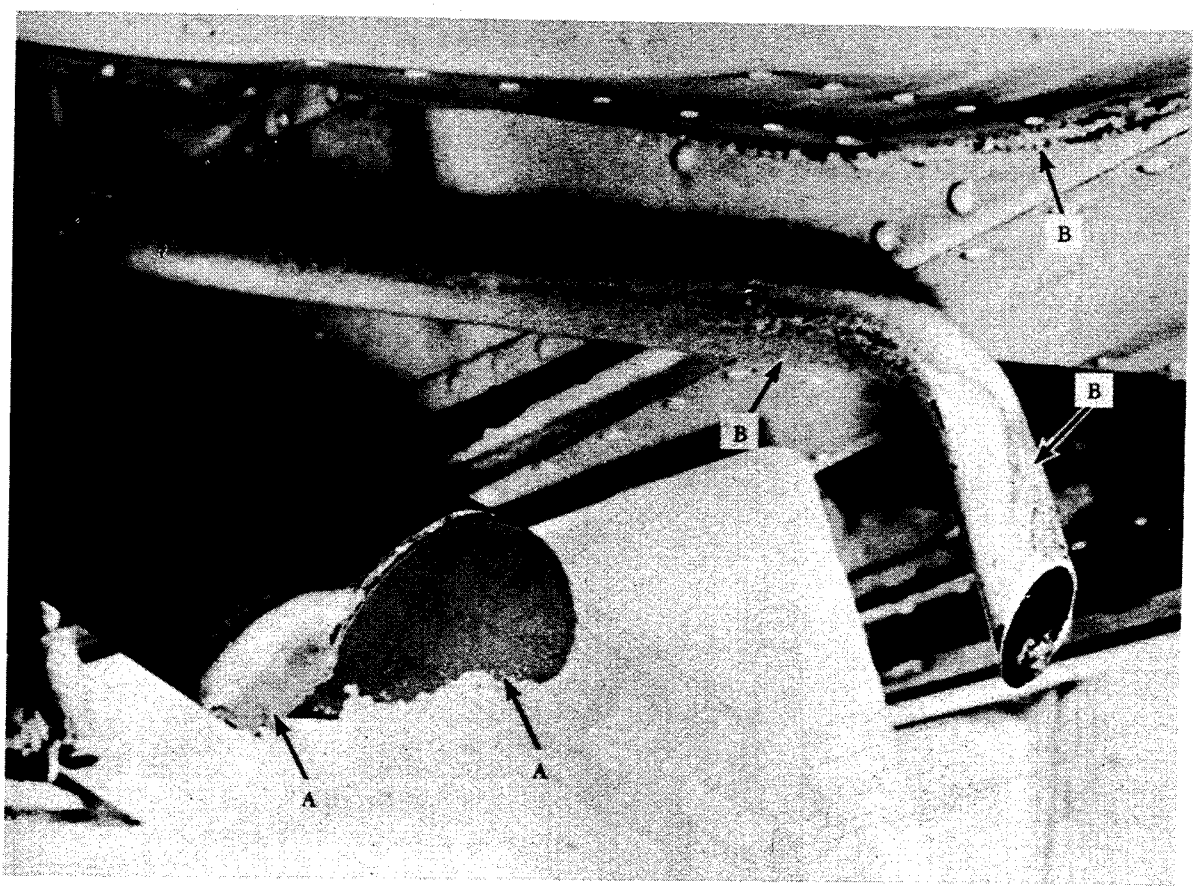

A. Tailpipe burned.
B. Exhaust deposits.

FIGURE 3-16. Exhaust stack damage.

posits) at a break in the system or on the adjacent area where exhaust gases impinge.

Figures 3–16 shows an example of exhaust outlet damage "A" and evidence of exhaust deposits "B."

On turbine engines, check the tailpipes and trim devices to see that they are not cracked and are in order. Check the controls for freedom and alignment. Any binding or malfunctioning of an engine control system should be traced to its source and corrected.

Figures 3–17 shows a heat exchange shroud opened for inspection. Arrows indicate areas which are prone to failure.

Remove the heater shroud from the exhaust manifold or muffler and inspect for cracks, burned-out spots, or defective welds. Determine that shutoff valves are operating through their full travel. Ensure cold air and heater ducts are free from obstructions and cracks, and are properly secured. If the heater incorporates an intensifier tube inside the exhaust ring or manifold, it should be removed and inspected for cracks or burned-out spots. Defects noted in the heater system must be repaired or the unit replaced immediately to assure that carbon monoxide or flames will not enter the cabin or cockpit. When an exhaust

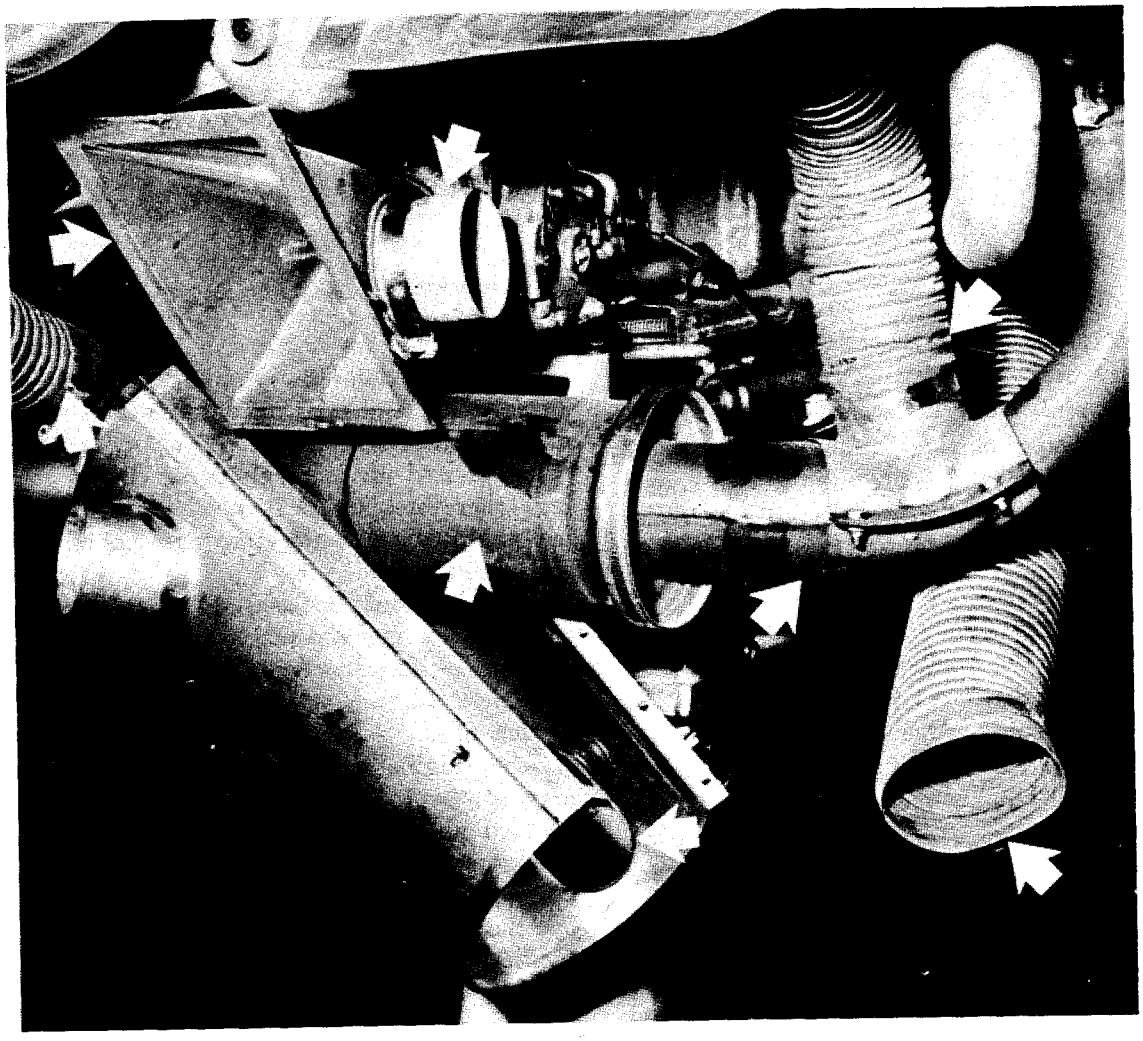

Figure 3-17. Heat exchanger—shroud removed.

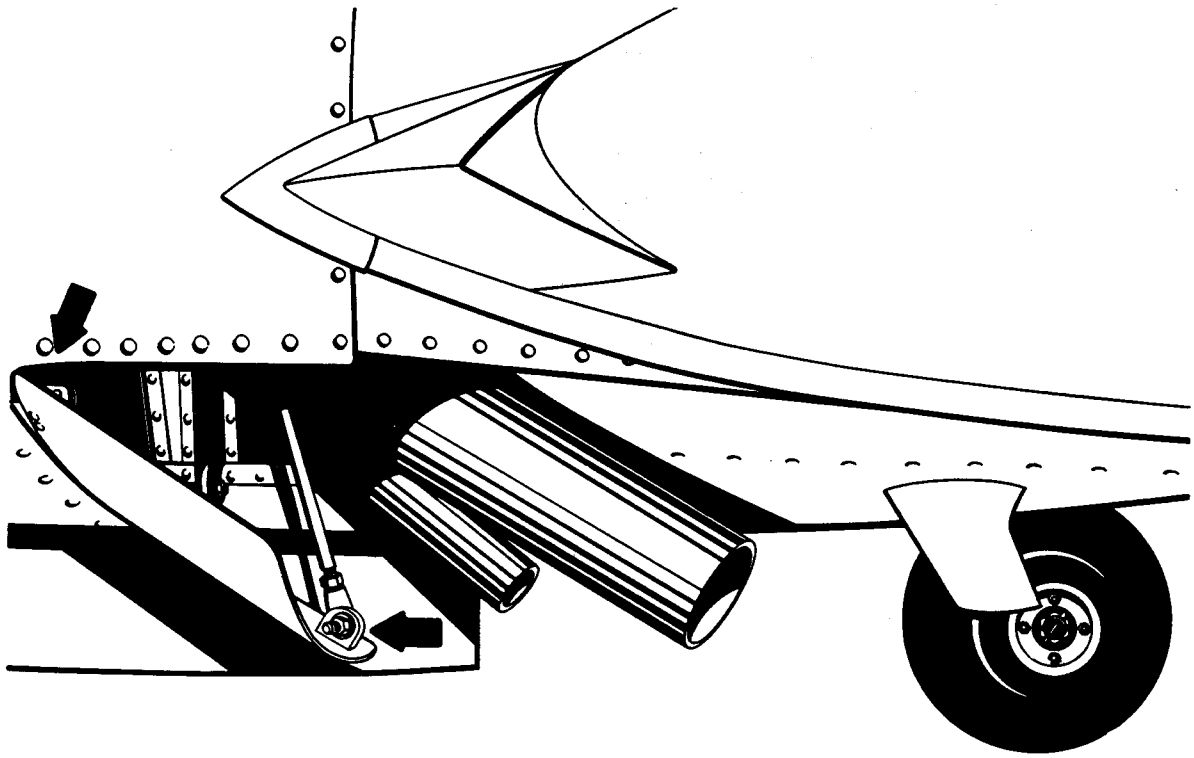

Figure 3-18. Cowl flap checkpoints.

leak is indicated or suspected during flight, open the cabin windows. Turn the cabin heat "OFF" and fresh air ventilation "ON" to avoid carbon monoxide poisoning. Do not use these procedures to initiate a flight with known exhaust system or heater defects. *Carbon monoxide kills.*

Operation of the cowl flaps is of vital importance in keeping cylinder head temperatures within the required operating range.

Determine that cowl flaps are in good condition; the hinges are not worn beyond limits; and the actuation mechanism is properly rigged for full travel and is operating properly. Cowl flaps must be maintained in good operating condition at all times in order to obtain required engine efficiency.

Figures 3–19 shows example of two types of repairs to engine baffles. "A" is a sheet metal reinforcement for a broken holddown bolt hole. "B" is a welded repair in a similar area.

Check baffles for security, holes, cracks, and proper fit around the cylinders. Inspect all air entrances and exits for deformations which might obstruct airflow.

Pressurized air is required for engine cooling; therefore, any leak around or through baffles causes a pressure drop and loss of cooling efficiency.

Use a drop light or flashlight to look through the nose cowling and check for gaps between the top cowling and engine baffles.

Inspect engine cylinders for cracked or broken fins.

Some engine mounts are heat-treated and may not be repaired by welding unless normalized and reheat-treated to their previous strength values. When cracks or inferior welds are found in such units, replacement or repair by the manufacturer or authorized repair facility is necessary. Nonheat-treated engine mounts may be repaired by welding if the work is performed in accordance with the manufacturer's instructions and is done by a person authorized in FAR 43.

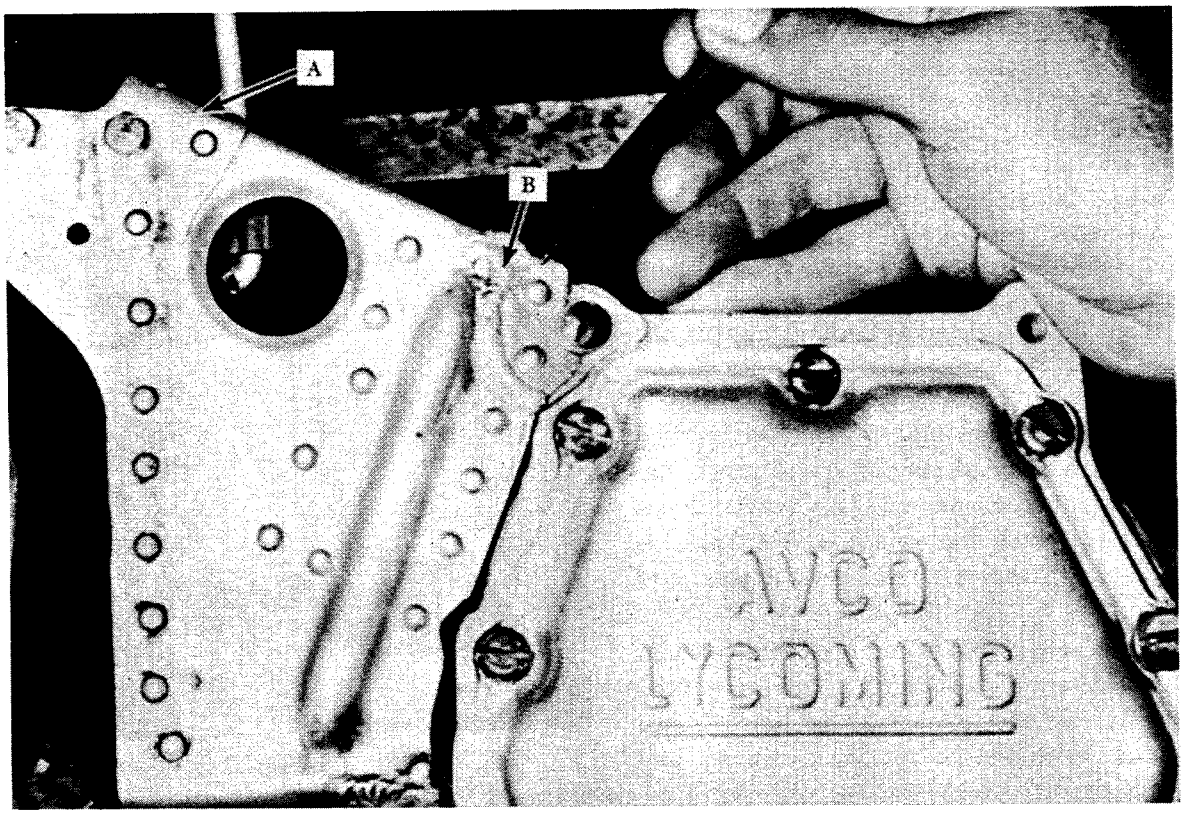

A. Sheet metal reinforcement.
B. Welded.

FIGURE 3-19. Engine baffles.

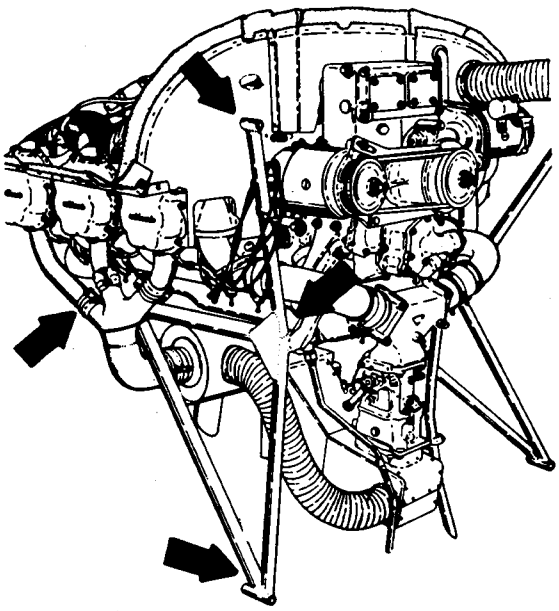

FIGURE 3-20. Engine mount checkpoints.

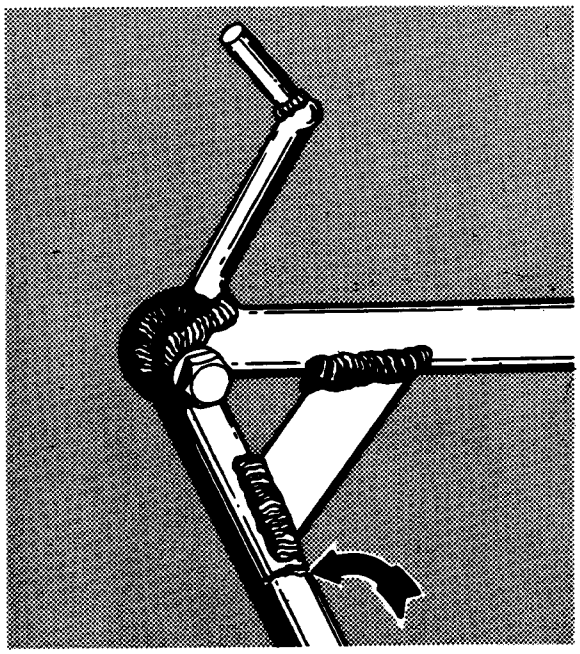

FIGURE 3-21. Cracked engine mount.

Examine the entire engine mount structure with a magnifying glass, especially at welds. Look for evidence of cracks or failure and inferior welds. Ensure that all attachment bolts are tight and properly safetied.

Inspect the mounting of all accessories such as generator, starter, oil pump, oil pressure relief valve body, etc., for security of attachment, oil leakage, and proper safetying. If oil or other fluid is detected around any of the accessories, the unit should be removed and the leakage corrected.

When combustion heaters are installed, inspect for security of mounting and proper installation of hot and cold air intake ducts. Inspect fuel lines for condition, leaks, attachment, and freedom from obstructions and kinks.

With heater switch "ON," check the solenoid valve to determine whether it is operating satisfactorily. If no clicking can be heard in the solenoid, it should be removed, cleaned, and

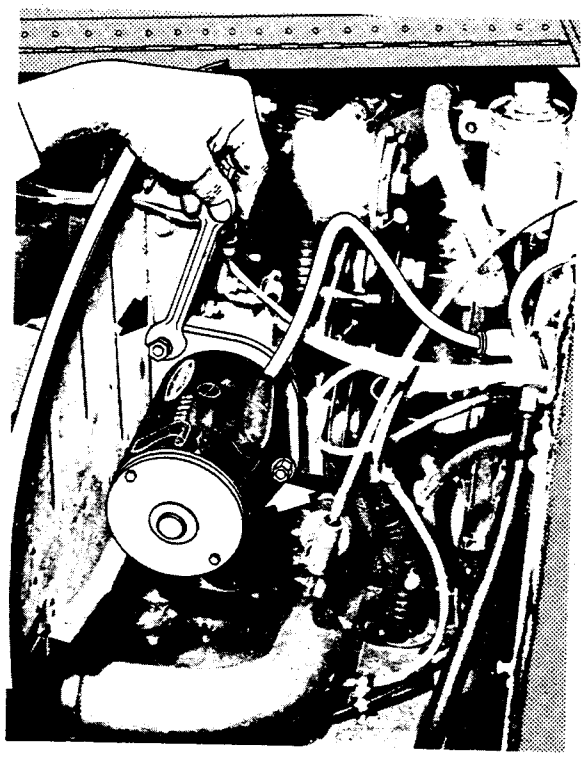

FIGURE 3-22. Checking starter security.

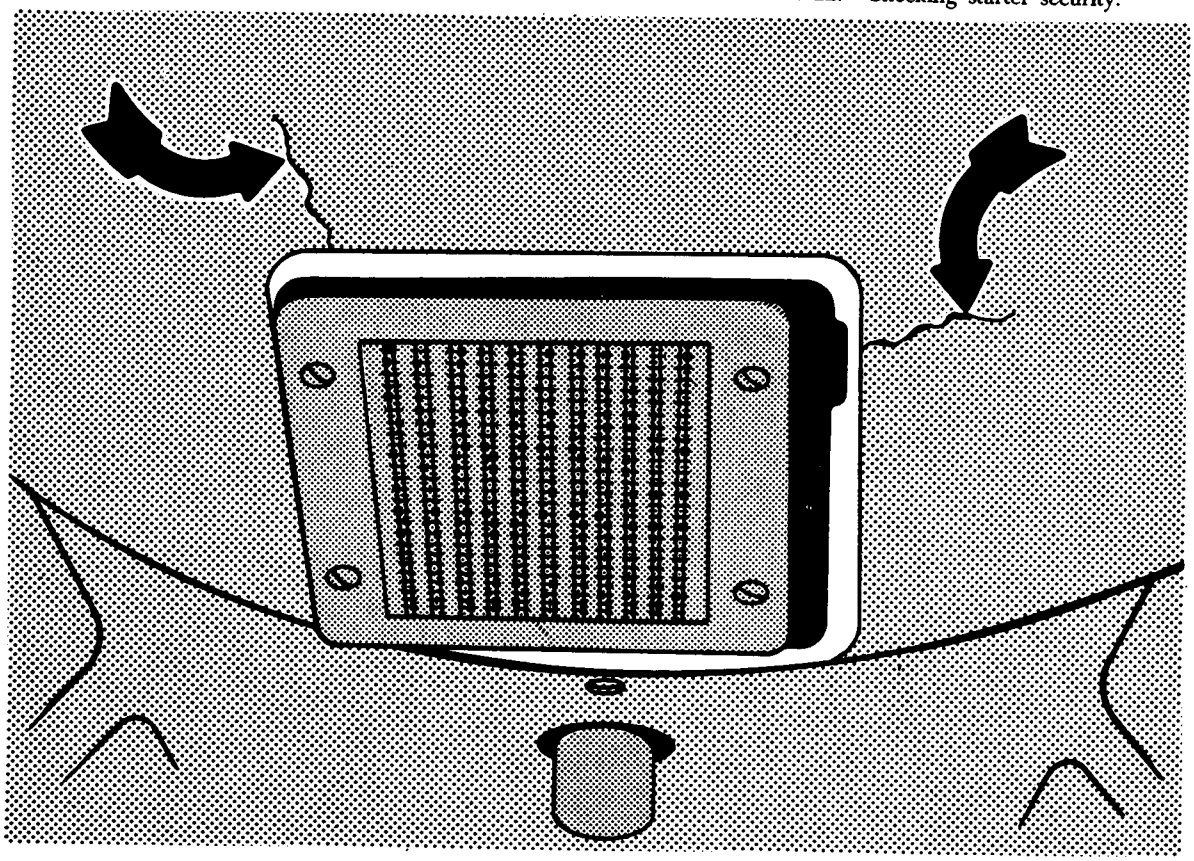

FIGURE 3-24. Damaged cowling.

inspected. Ensure that exhaust and overflow lines are properly routed through the structure to the outside air.

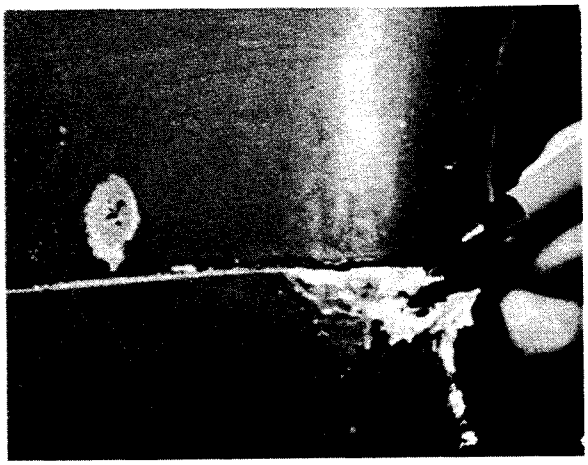

FIGURE 3-23. Inspect cowling for damage.

Inspect engine cowling for defects such as cracks, dents, chafing on portions of the engine or aircraft structure, and loose rivets, clamps, fasteners, or other locking devices.

After completion of cowling repairs, reinstall and check for proper fit and security.

The presence of black or dark streaks on aluminum structure usually indicates chafing caused by vibration and looseness.

Check condition of the firewall behind the engine. Inspect insulation for condition, attachment, and for oil or fuel saturation.

Oil or fuel saturation of insulation material presents a serious fire hazard. The source of the oil or fuel must be located and the leak corrected. The saturated insulation should be removed and cleaned if possible. If cleaning is impossible, the insulation must be replaced.

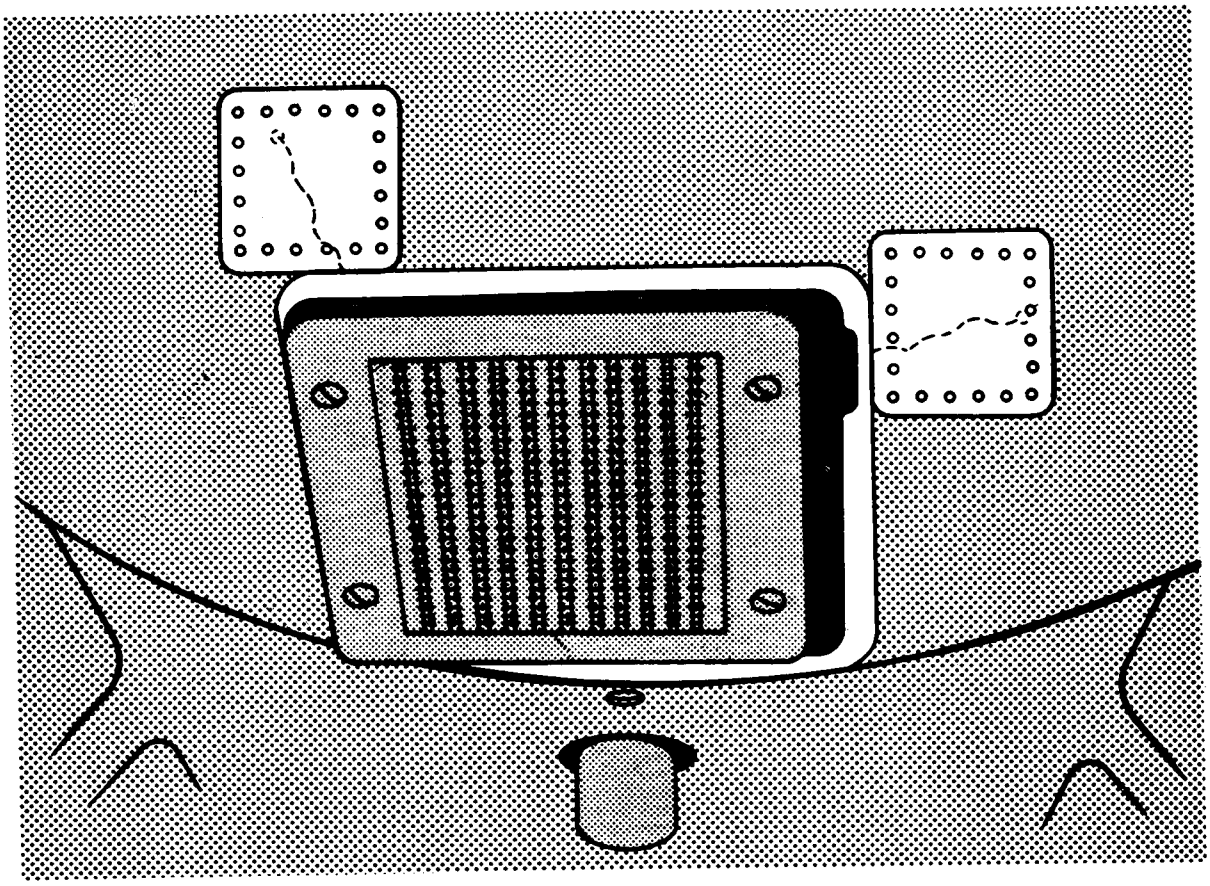

FIGURE 3-25. Repaired cowling.

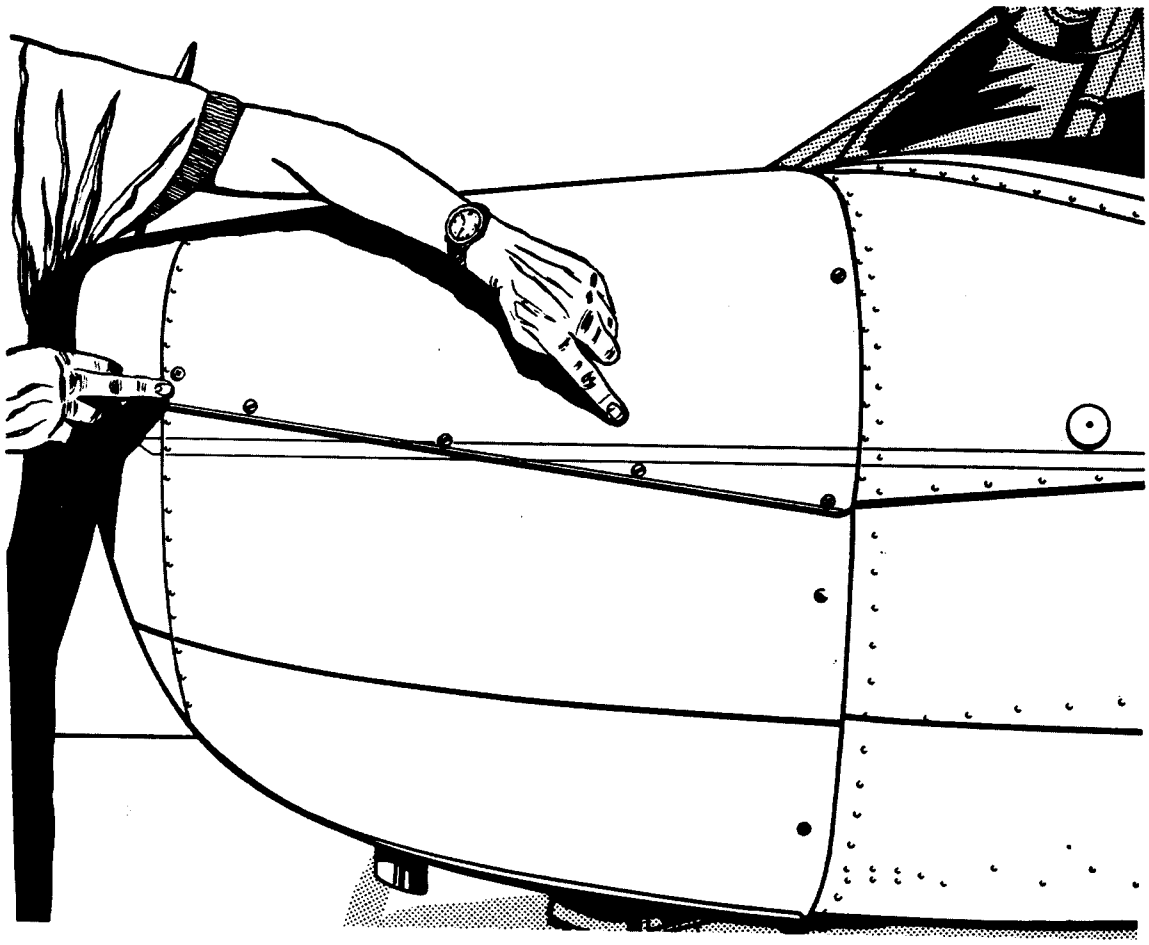

FIGURE 3-26. Cowling installation checkpoints.

Figure 3–27 shows the results of improper fit of the engine access cowling. Note arrow pointing to hole worn in nacelle fairing.

Battery Maintenance Precautions

It is a good practice to protect the area adjacent to the battery with an acid-proof paint if it is a lead-acid battery, or an alkaline base paint if it is a nickel-cadmium battery.

When working around the battery, care should be exercised to avoid short-circuiting across the terminals. Resultant arcing presents a serious fire hazard. As a safety precaution, the battery should be removed during cleaning and repair operations. Remove the "ground" terminal first, and reinstall it last.

Lead-Acid Battery Inspection and Service

Check the battery box and terminals for corrosion and security. Inspect vents and overflow lines for condition and obstructions. These lines should be routed to prevent overflowing liquid from contaminating and corroding the adjacent structure.

Check the charge of a lead-acid battery by using a hydrometer. When the hydrometer test indicates a variance of more than 20 points between cells, the battery should be recharged or replaced.

If the electrolyte in a lead-acid battery is low, replenish it with distilled water to the specified level. A 30-minute flight should be sufficient operating time before conducting a hydrometer test after refilling.

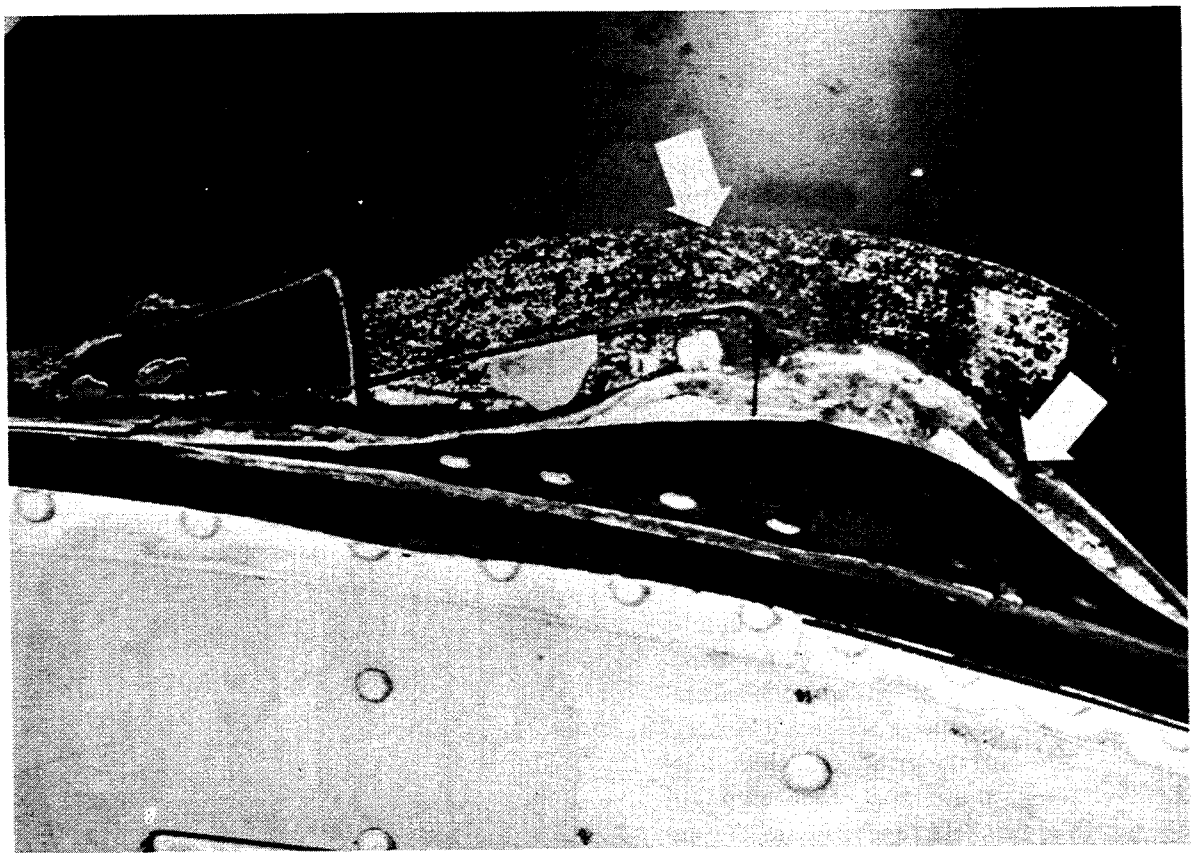

FIGURE 3-27. Evidence of chafing.

Nickel-Cadmium Battery Inspection and Service

Check the battery box and terminals for corrosion and security. Inspect vents and overflow lines for condition and obstructions. These lines should be routed to prevent overflowing liquid from contacting and corroding the adjacent structure.

Check the individual cell voltages. If an unbalanced condition exists, maintenance by a certificated mechanic or certificated repair station is required.

White powder on top of the battery indicates spillage of the electrolyte and requires the same action as the unbalanced condition.

Maintenance should be done in accordance with the manufacturer's specifications.

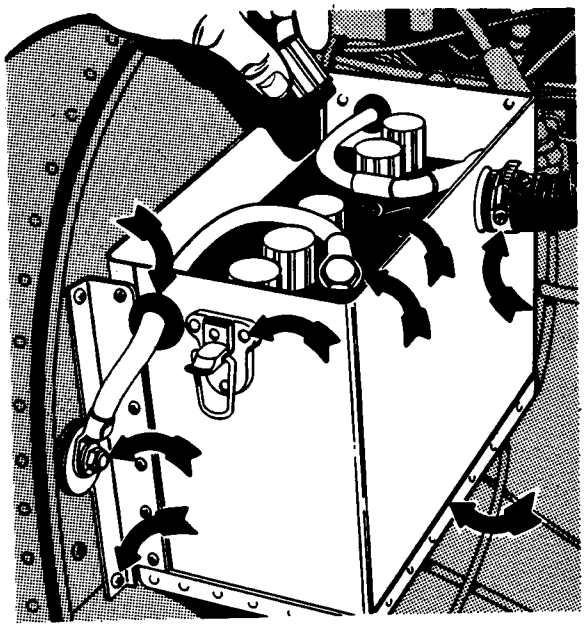

FIGURE 3-28. Battery installation checkpoints.

Section 4. LANDING GEAR

There are numerous types of landing gears: tripod; spring steel; single strut; fixed and retractable gear for operation on wheels from prepared or semiprepared hard surfaces; floats for operation from water; and skis for operation from snow and ice surfaces. Certain features are common to nearly all wheel-type landing gear and, therefore, will be discussed as one topic to simplify the inspection procedures.

Tires and wheels absorb the original impact upon landing and are the principal part of the aircraft involved in ground control. Failure of a tire at any time can lead to undesirable circumstances; therefore, tire and wheel inspection and maintenance are priority items.

Inspect tires for proper inflation. Use the pressure recommended by the aircraft manufacturer. Look for cuts, bruises, wear, bulges, imbedded foreign objects, and deterioration. Excessive tire wear may be caused by misalignment of landing gear wheels, scissors assembly, or axles. If tires are underinflated, their sidewalls may crack and show other signs of excessive breakdown. If tubeless tires are underinflated, the seal against the rim may leak. Overinflated tires may show abnormal crown wear.

Unbalanced tires and wheels result in uneven tire wear and cause vibration which can, in turn, damage other parts of the aircraft. Some tires have a color thread imbedded in the carcass. When the tire's thread wears to a certain point, the color tracer indicates that it is time to recap or replace the tire.

If the tire has no color tracer, a tread worn smooth is usually a signal for similar action.

Petroleum products can cause rapid deterioration of rubber in a tire. Do not allow oil or fuel to drip on tires, and avoid parking the aircraft where they have been spilled.

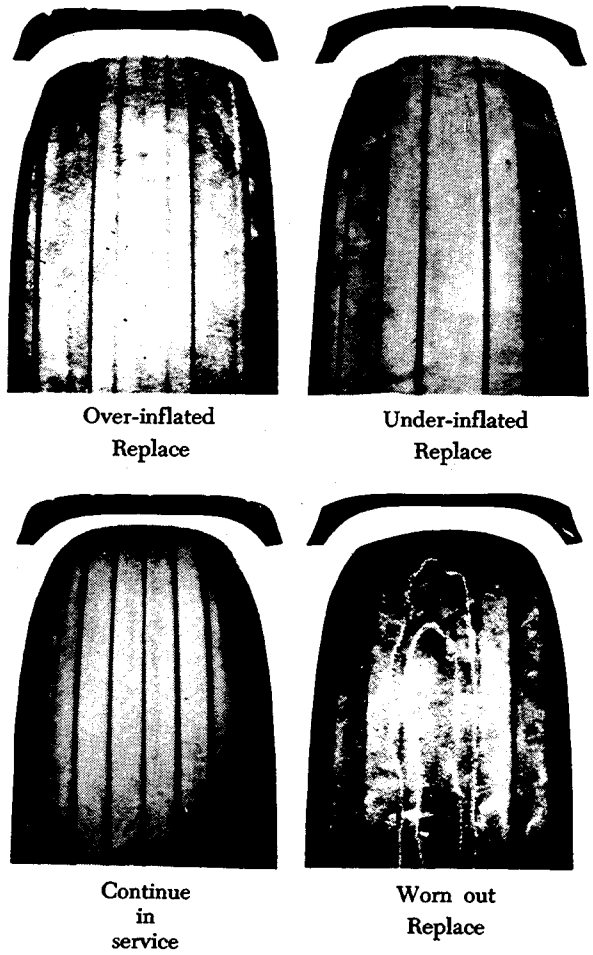

FIGURE 4-1. Examples of tire defects.

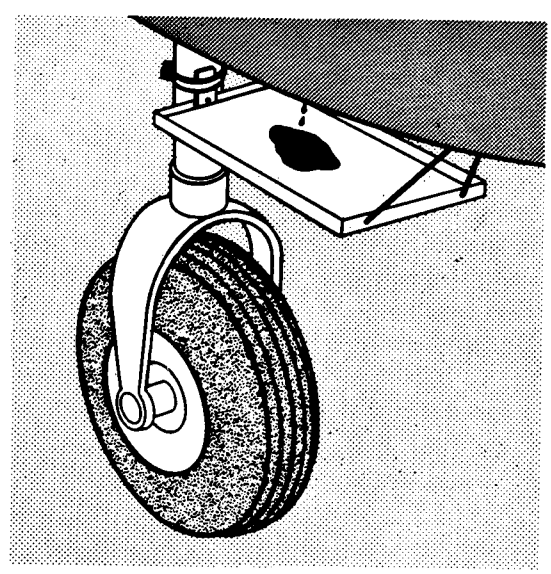

FIGURE 4-2. Tire protected by drip pan.

Brakes

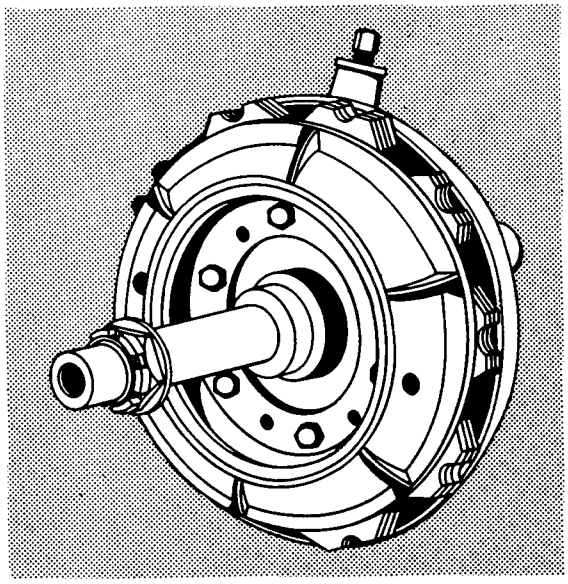

FIGURE 4-3. Multiple disc-type brake.

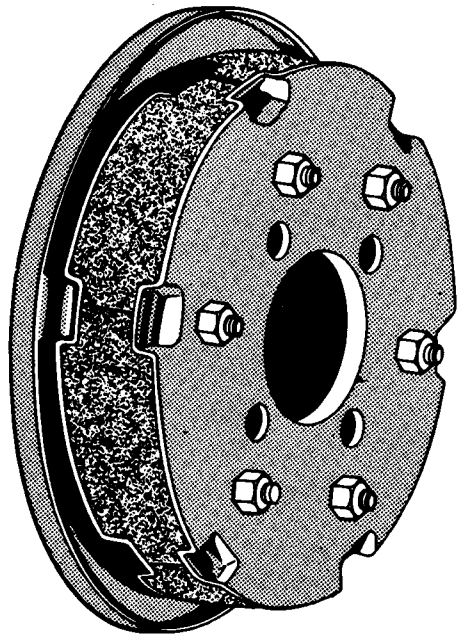

FIGURE 4-5. Expander block-type brake.

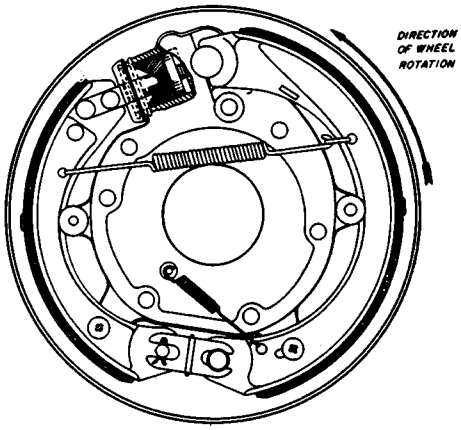

FIGURE 4-4. Shoe and drum-type brake.

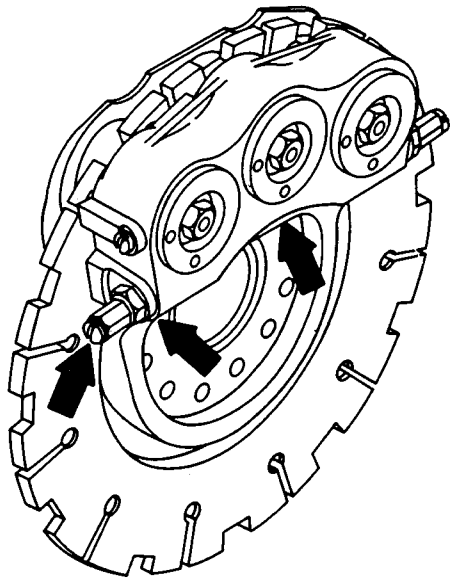

FIGURE 4-6. Disc brake inspection points.

Jack up the airplane, remove the wheel, and inspect the brake assembly for broken or distorted parts, broken springs, and worn lining. Faulty or missing spring clips may cause brakes to chatter. Check the condition of friction components (discs, expanders, and shoes). Examine brakes for security of nuts, bolts, and cotter pins. Determine that foot and parking brake controls are in good condition, operating properly, and safetied. Check the antiskid units, if installed.

Improper functioning of brakes could cause serious consequences. Any defects or questionable items noted should be referred to qualified maintenance personnel authorized in FAR 43 to make repairs or adjustments.

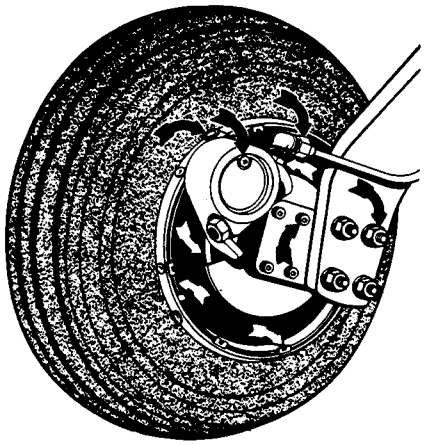

FIGURE 4-7. Wheel and brake inspection points.

When mechanical brakes are installed, examine the cables for condition. Worn or frayed cables should be replaced. Check pulleys for ease of turning, alignment, and proper attachment. Check pedals and actuating arms for proper operation. Check friction components for condition.

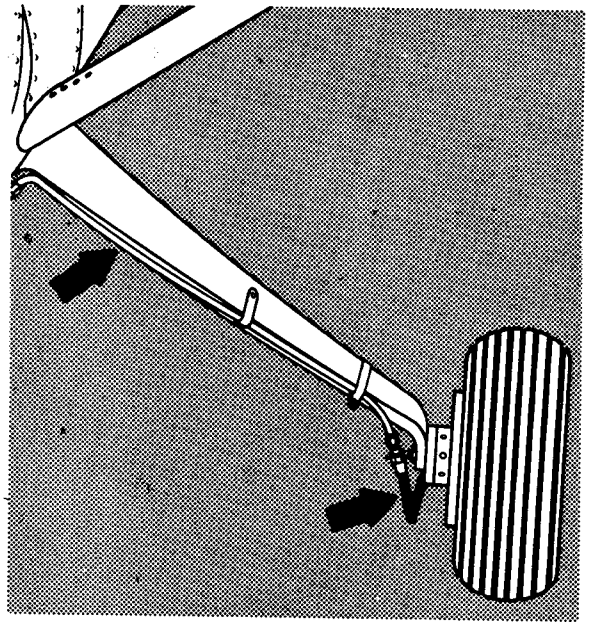

FIGURE 4-8. Hydraulic brake line checkpoints.

When hydraulic brakes are installed, inspect fluid lines for defects. Check the system for leakage around wheels, master cylinders, and connections. Inspect for deterioration and security of flexible tubing. Check brake fluid

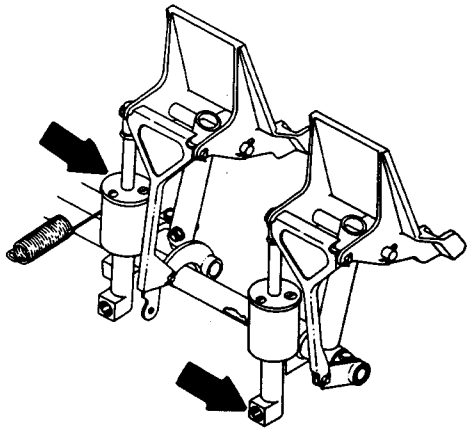

FIGURE 4-9. Simple master cylinder brake system.

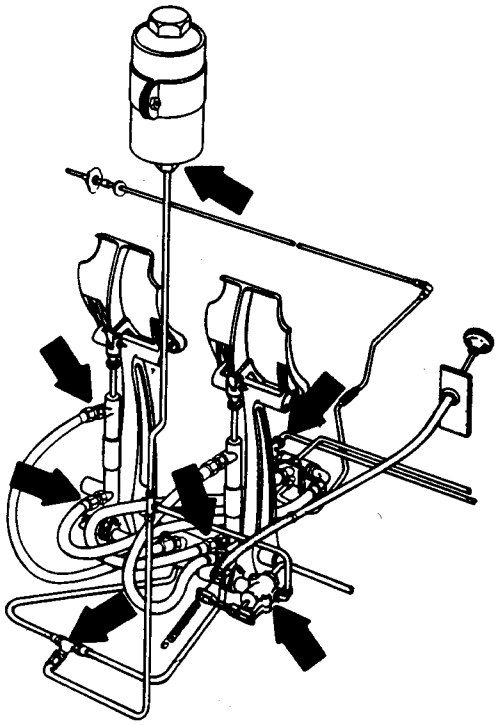

FIGURE 4-10. Cockpit—hydraulic brake line checkpoints.

level in the reservoir. A low fluid level may indicate a leak somewhere in the system, requiring a more thorough inspection of the brake system. Always use the type of brake fluid recommended by the aircraft manufacturer. If the brake pedal feels "spongy" when pressed, it may indicate air in the brake system or other abnormality. Further inspection and corrective action is warranted.

Wheels

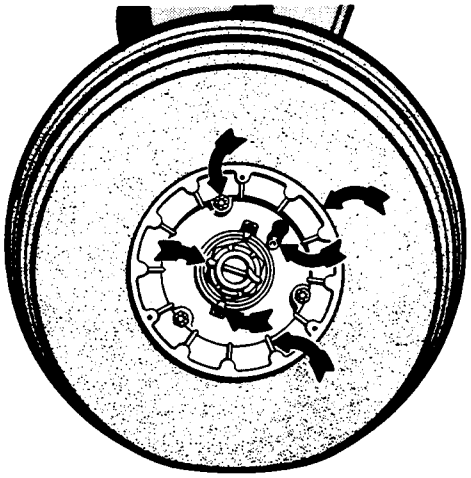

FIGURE 4-11. Wheel checkpoints.

Inspect wheels for damage and cracks. A bent or distorted wheel flange generally indicates that it is cracked or broken. Inspect bolts for condition and security of attachment. check the condition of wheel bearings. With the wheel installed on the axle, check excessive side play by moving the wheel back and forth against the thrust washer and adjusting nut. When properly adjusted, safety the retaining nut.

To prevent damage to bearings from the abrasive action of dirt, the hub cap should be installed and secured in position.

Before reinstalling wheels, clean, lubricate, and

Fixed Landing Gear Shock Absorbers

Regardless of the type of landing gear installed, a shock absorbing mechanism is pro-

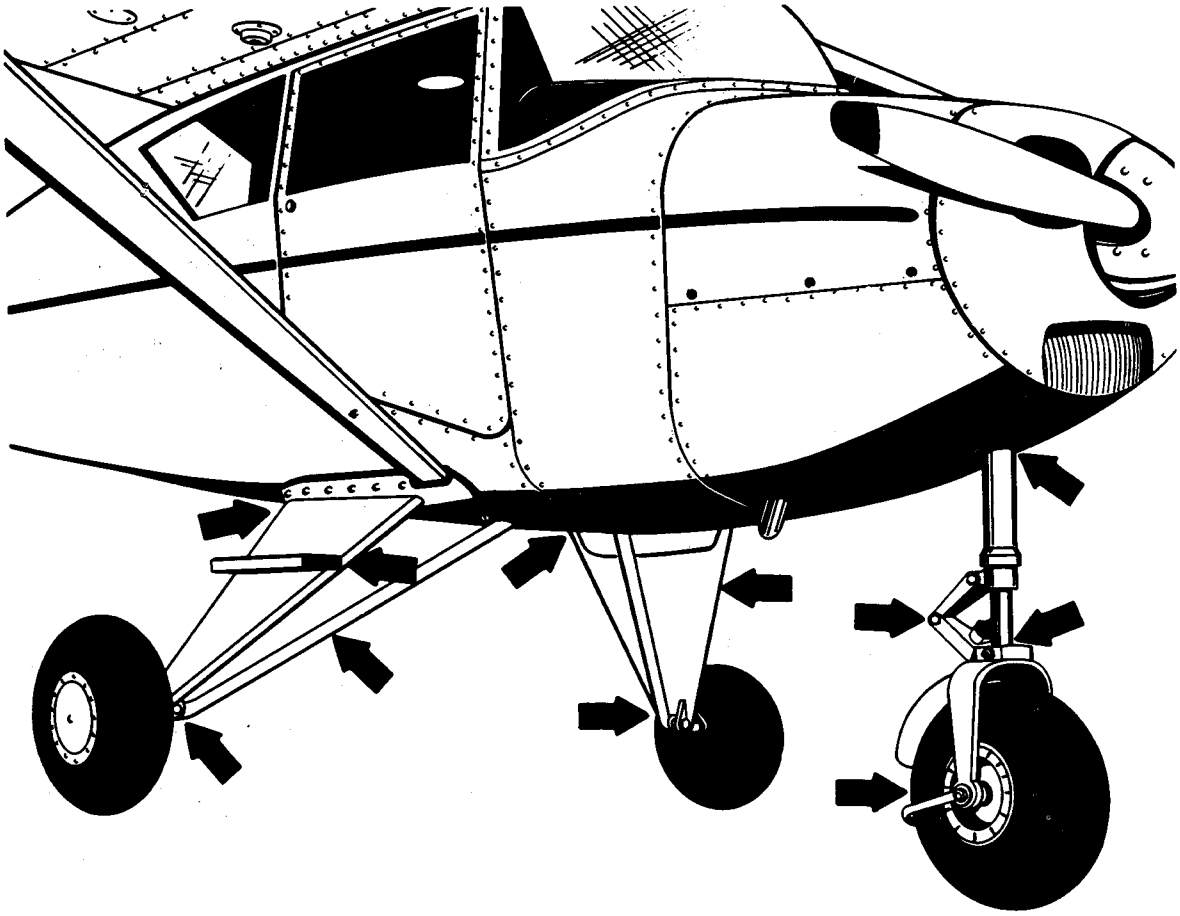

FIGURE 4-12. Inspection chart—fixed landing gear.

vided to absorb the landing loads. A number of different shock absorbing devices are used by aircraft manufacturers. A few will be discussed here.

When shock cords are employed, inspect for general condition, cleanliness, stretching, and fraying. Shock cords must be kept free of gasoline and oil, both of which deteriorate rubber products. Follow the manufacturer's recommendations regarding life limits of the replacement of shock cords.

Perform a close visual inspection of the main landing gear for cracks in the vicinity of welds. Examine attachment fittings for condition and elongation of bolt holes.

Wrinkled fabric or metal skin detected in the area of the attachment fittings should be referred to a qualified mechanic or repair station for detailed inspection and analysis.

Spring steel shock absorbers require little maintenance. Check for cracks in the fuselage attachment brackets and the axle attachment area. Inspect the strut in the step attachment area.

Excessive play between fittings may be detected more readily if the wheel is off the ground and the landing gear shaken vigorously in a fore and aft direction, as well as up and down. If noticeable clearance is detected at any of the attachment points, the bolts should be removed and inspected for wear or distortion. Defective bolts should be replaced immediately and distorted bushings and fittings repaired or replaced as recommended by the manufacturer. Since there will be considerable movement at the bearing surface, it is essential that they be inspected carefully and lubricated properly at frequent intervals.

Inspect shock struts for cracks, bowing, and security of attachment. Check braces and fittings for general condition and possible defects.

Inspect the nosewheel assembly for general condition and security of attachment. Examine linkage, trusses, and members for evidence of undue wear or distortion. Ensure that all bolts, studs, and nuts are secure with no indication of excessive wear and that they are properly safetied. If a shimmy damper is installed, ensure that it is operating satisfactorily and that the steering mechanism is properly rigged.

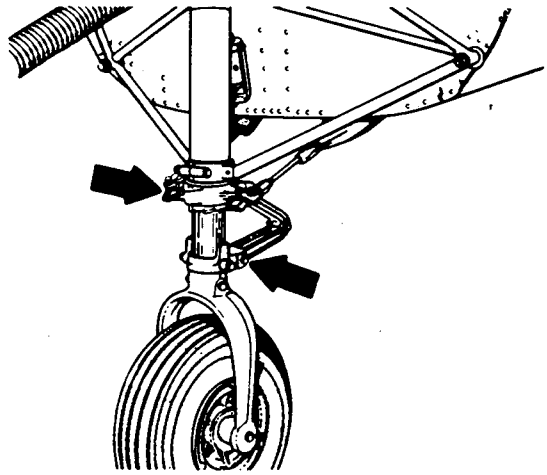

Figure 4-13. Fixed nose gear check points.

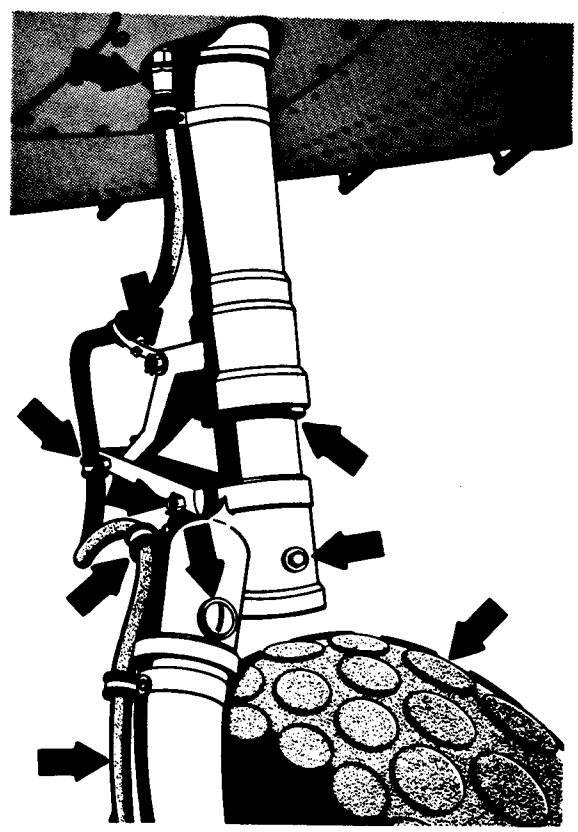

Figure 4-14. Oleo-type landing gear checkpoints.

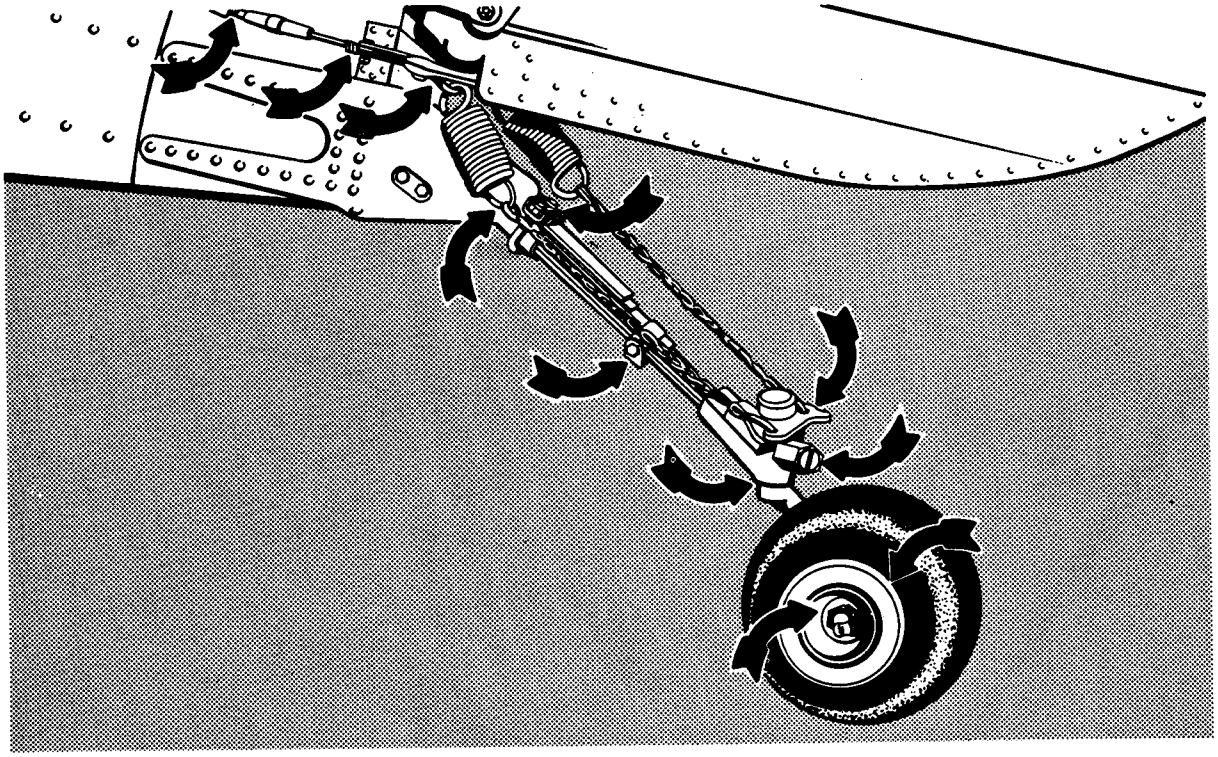

FIGURE 4-15. Steerable tailwheel inspection points.

Inspect oleo-type shock absorbers for cleanliness, leaks, cracks, and possible bottoming of the pistons. Check all bearings, bolts, and fittings for condition, lubrication, and proper safetying.

Following the manufacturer's instructions when replenishing fluid and air pressure charge in the shock absorber.

Steerable tailwheels should be inspected for bearing adjustment, lubrication, clearance, and range of operation. Check for proper steering action and security of attachment.

Landing gear that retracts into the wing, nacelle, or fuselage structure should be cleaned and checked frequently for defects and proper operation. Particular attention should be given to locking mechanisms, drag struts, shock strut, stops, linkages, and alignment. Be sure the shock strut is properly inflated and the piston is clean and oiled. Examine fairing doors for satisfactory operation, proper rigging, and for loose or broken hinges.

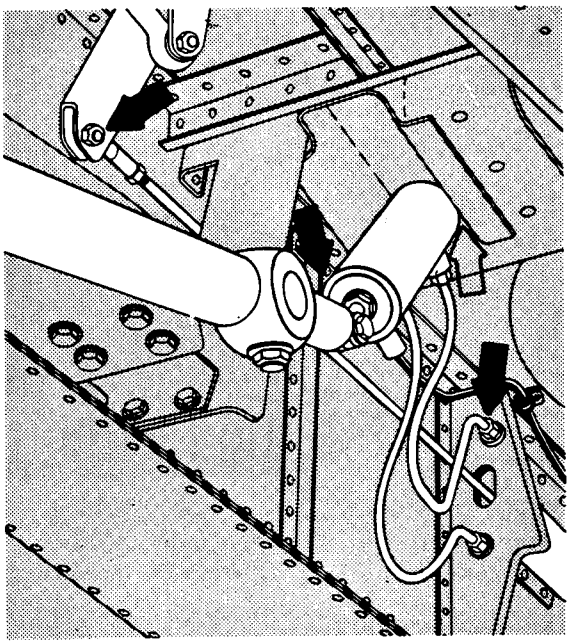

FIGURE 4-17. Retractable main gear checkpoints.

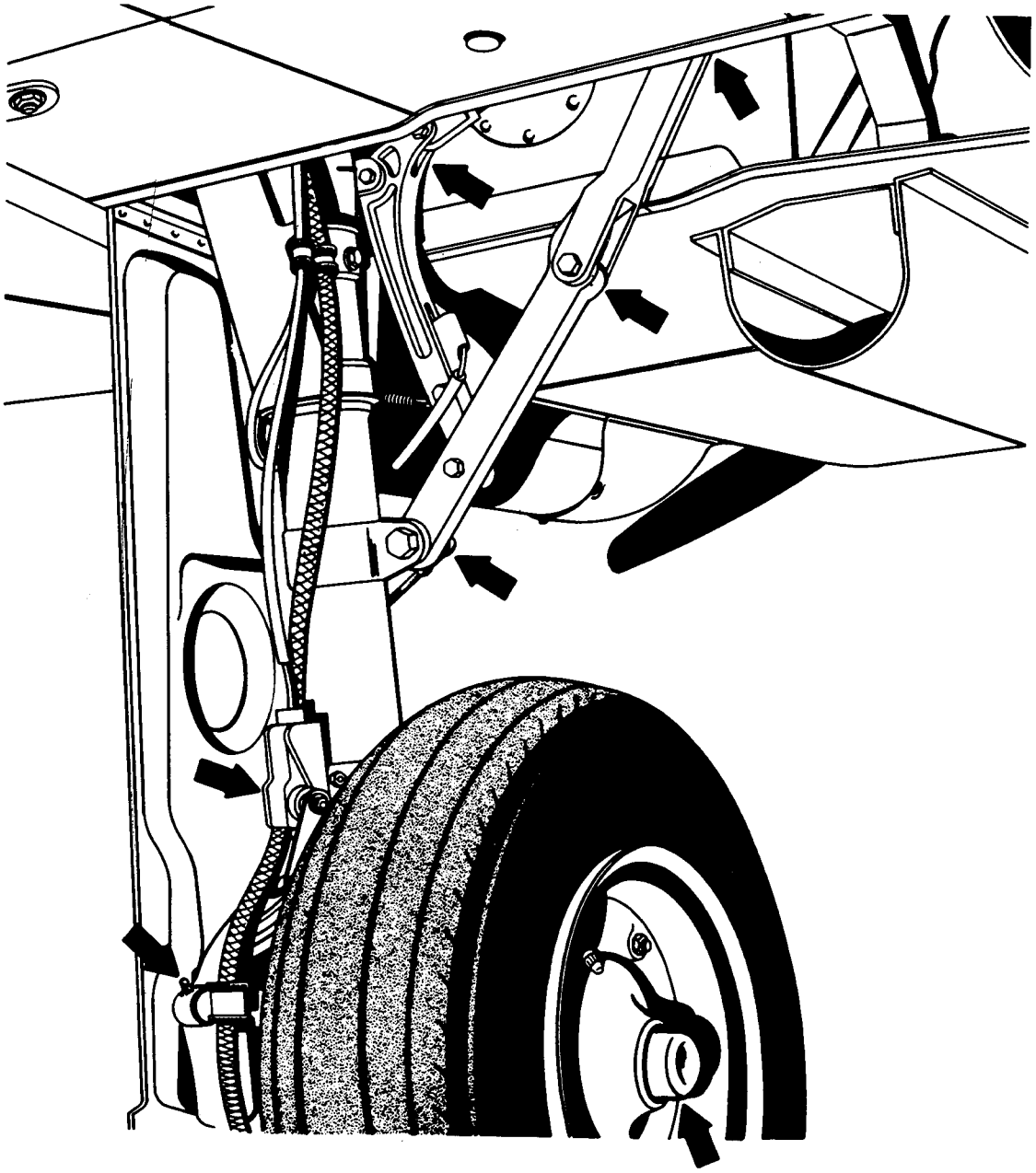

FIGURE 4-16. Inspection chart—retractable landing gear.

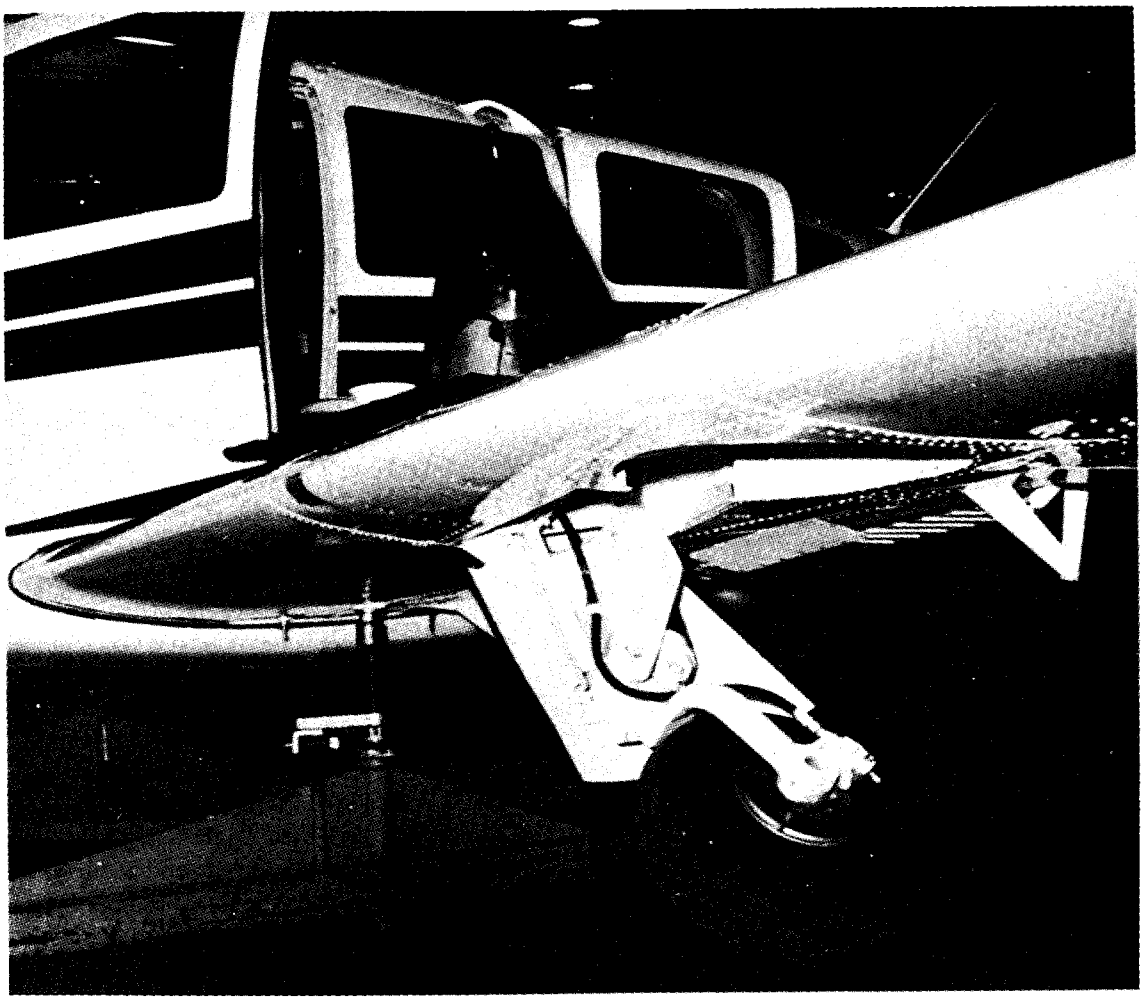

Figure 4-18. Landing gear retracting.

When new or retread tires are installed, a landing gear retraction test should be performed to check for proper clearance. Improper tire size may cause the gear to hang up in the wheel well.

Check main gear, nose gear, or tail gear uplock and downlock mechanisms for general condition and proper operation.

Refer to the manufacturer's service instructions for proper lubrication of retractable landing gear.

Inspect the power sources and the retracting mechanism of the main gear, nose gear or tail gear for general condition, defects, and security of attachment. Determine that actuating cylinders, sprockets, universals, chains, and drive gears are in good condition and within the manufacturer's tolerance. Clean and lubricate using cleaning fluids and lubricants recommended by the manufacturer of the aircraft.

Inspect the aircraft structure to which the landing gear is attached for distortion, cracks, and general condition. Be sure that all bolts and rivets are intact and secure.

Any items not within required tolerances should be referred to qualified maintenance personnel for correction and readjustment.

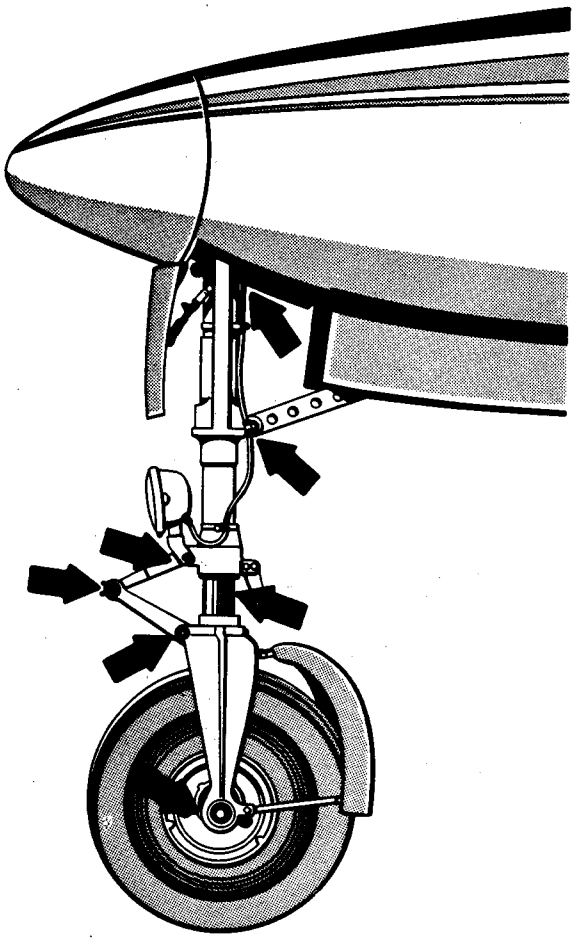

FIGURE 4-19. Retractable nose gear checkpoints.

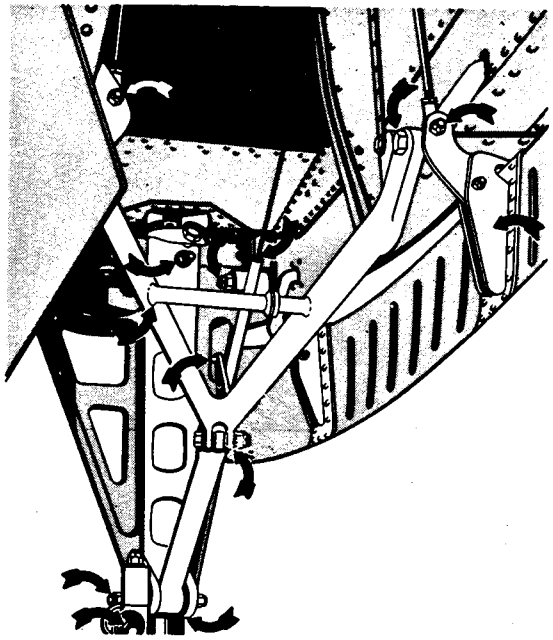

FIGURE 4-20. Retracting mechanism checkpoints.

If the landing gear is electrically operated, inspect motors for defects and security of attachment. Ensure that wiring is in good condition, properly routed, and secured to prevent interference with movable members. Determine that protective rubber or plastic caps are properly installed over all wire terminals requiring such protection.

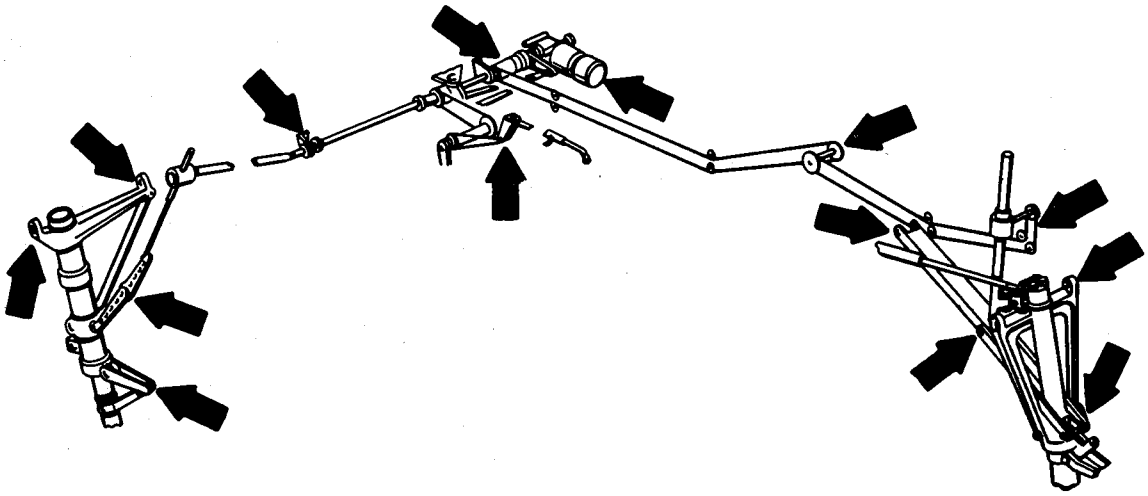

FIGURE 4-21. Typical electrical retraction installation.

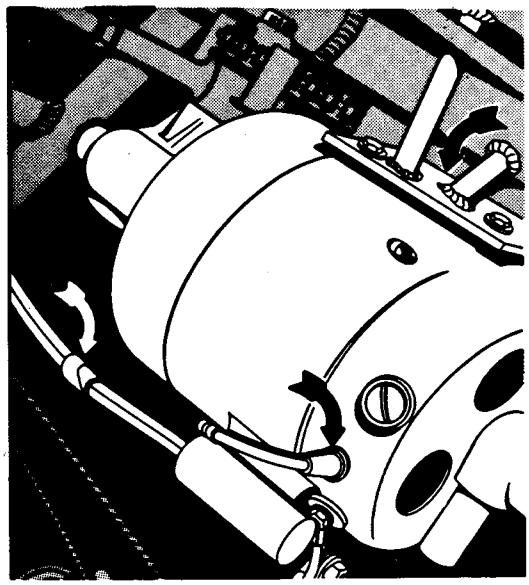

FIGURE 4-22. Electrical retracting motor and wiring.

If the landing gear is hydraulically operated, inspect all actuators for general condition, leakage, and operation throughout their full travel. Determine that lines, reservoirs, accumulators, and valves are securely attached and free of leaks. Be certain that the lines are free from chafing and securely attached to the adjacent structure. Check entire gear operation, using normal hydraulic pressure.

Inspect warning system microswitches for cleanliness, condition, security of attachment, and proper operation. With the aircraft on jacks, check landing gear warning horn system with electrical power "ON," by retarding throttle(s) with gear retracted. Check wiring for routing, freedom from chafing, and general condition.

Water accumulation in microswitches may freeze at altitude, making switches inoperative. Only qualified personnel should attempt any adjustments to the microswitches.

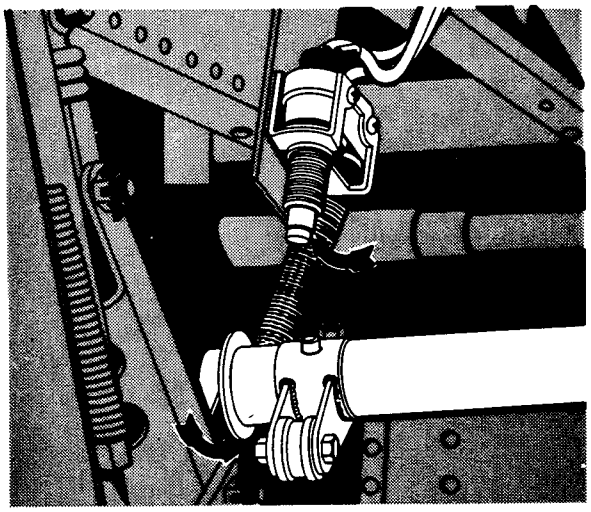

FIGURE 4-23. Warning microswitch installation.

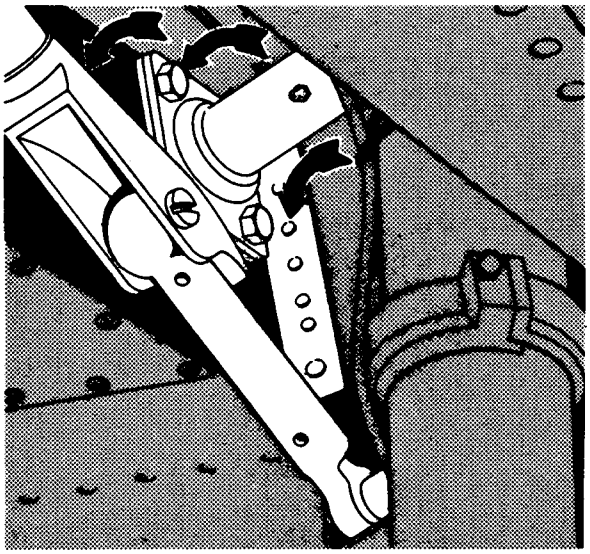

FIGURE 4-24. Gear attachment structure checkpoints.

Other Gear

Inspect the skin for general condition, evidence of corrosion, or loose rivets and screws. Check the structure for defects or cracks.

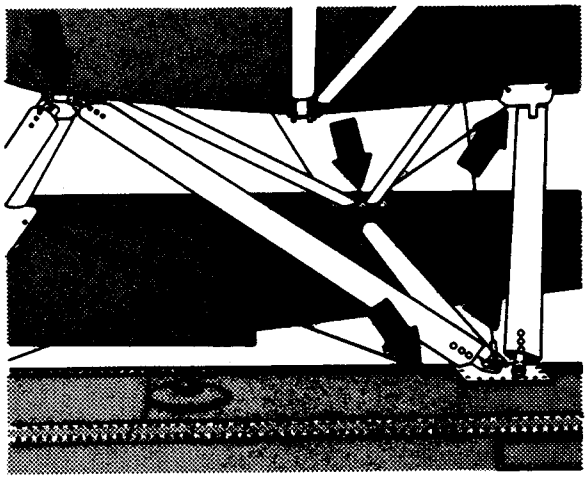

FIGURE 4-25. Float installation inspection points.

Inspect float attachment fittings for condition, cracks, and defective welds. Check struts and bracing for proper attachment, alignment, and safetying. Due to the rigidity of float installations, a thorough inspection should be made of the fittings and adjacent structure where the struts are attached to the fuselage. Drain or pump any accumulated water from each float compartment.

Skis should be inspected for defects or damage and for security of rigging and main axle attachment fittings. Special attention should be given to the ski pedestal. Periodically inspect the ski bottoms for tears or cracks. If installed, check hydraulic system for leaks and proper fluid level. Inspect for condition and proper rigging of all devices restraining the skis from digging into the snow.

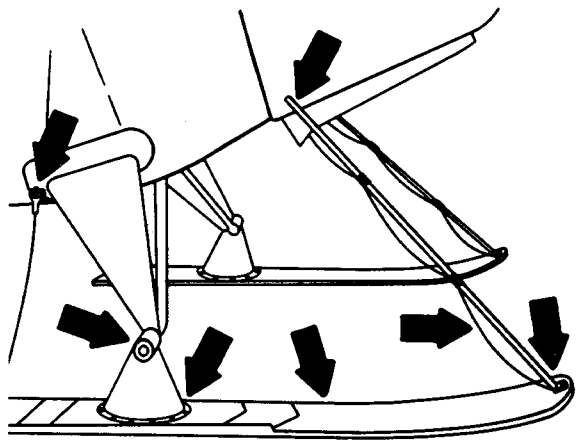

Figure 4-26. Ski installation inspection points.

Section 5. WING-CENTER SECTION

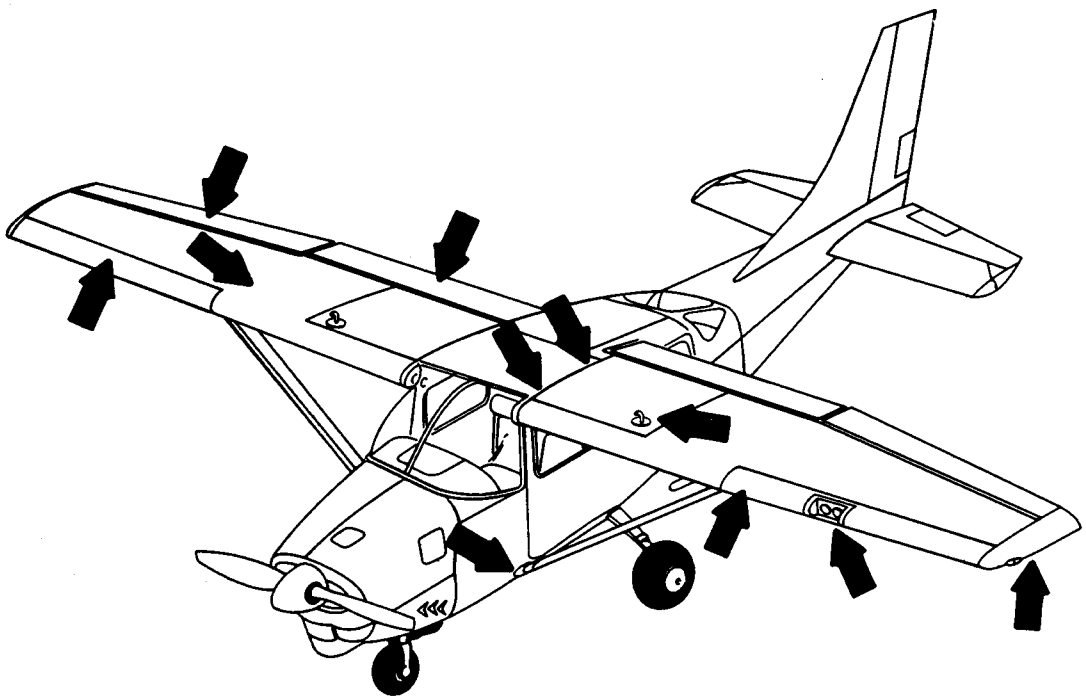

FIGURE 5-1. Inspection chart—wing—center section.

Determine the condition of the wing and center section by carefully inspecting fixed surfaces for signs of deterioration, distortion, and loose or missing rivets and screws, especially in the area of fabric or skin attachment to the structure. Inspect fabric or skin for tears, cuts, or other defects; and examine condition of protective covering. Inspect fabric at windshield for deterioration and security of attachment.

External distortion in any area may be an indication of internal failure. Inspect the interior through available inspection doors or holes. If internal failure is suspected and no inspection doors or holes exist, contact a certificated maintenance facility to make the necessary inspection and repair.

Inspect the internal brace fittings (struts or brace wires) where they attach to the wing structure, for distortion, cracks, or any other defects. Inspect clevis pins or bolts for wear, cracks, worn or damaged threads, and any other defects.

If any rigging adjustment of the external bracing has been accomplished, particular care should be taken to ensure that there is a sufficient number of threads holding in the adjusting terminals. Most terminals are provided with a test hole in the shank for making this inspection. If safety wire can be inserted through the test hole, the terminal is not being held by the required number of threads. Another method of ensuring that sufficient threads have been screwed into the barrel or female fittings is to count the threads on the

male fitting. If more than three threads show, the connection MAY not be satisfactory.

Determine that wing attachment fittings are not distorted, cracked, or damaged in any way, and that bolt holes are not elongated. Check wing attachment bolts for general condition and security of attachment. If wing attachment bolts are loose, determine the reason for looseness. Tighten to the torque values specified by the manufacturer if no other defect exists.

Be certain that hydraulic lines are free from cracks, kinks, dents, and leaks, and inspect for security of attachment and wear due to chafing. Ensure that hydraulic actuators are securely mounted and not leaking.

Any defects noted in the hydraulic system should be corrected by a properly qualified mechanic.

If the condition of the fabric is doubtful, the advice and assistance of a qualified person should be sought. Samples of the fabric may be taken from portions of the aircraft MOST affected by the elements and forwarded to an accredited testing laboratory for examination.

On fabric-covered surfaces, check drainage grommets for security of attachment and obstructions. Drainage grommets are reinforced openings usually located near the lowest point at the trailing edges of wings and tail surfaces. These openings provide for drainage of moisture and circulation of air to dry interior surfaces. Seaplane drainage grommets are identified by a hood over the center cutout which minimizes effect of spray during takeoff and landing. This type of grommet is sometimes used on landplanes in that part of the structure subject to splash from the landing gear when operating from wet or muddy fields.

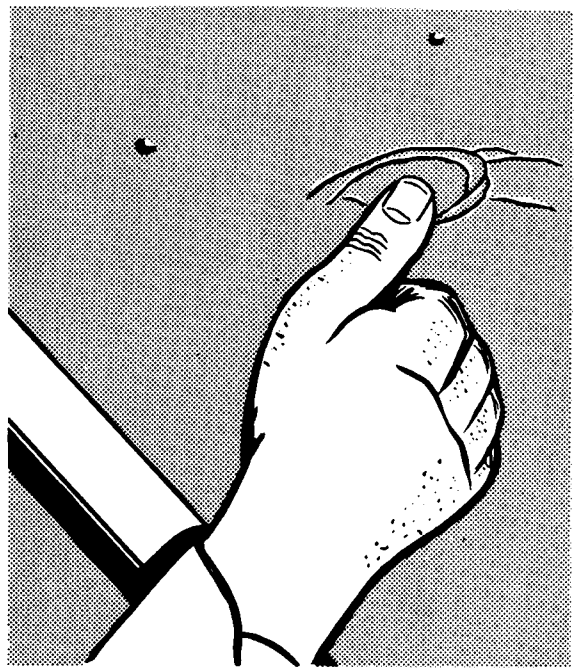

Figure 5-2. Indication of defective fabric.

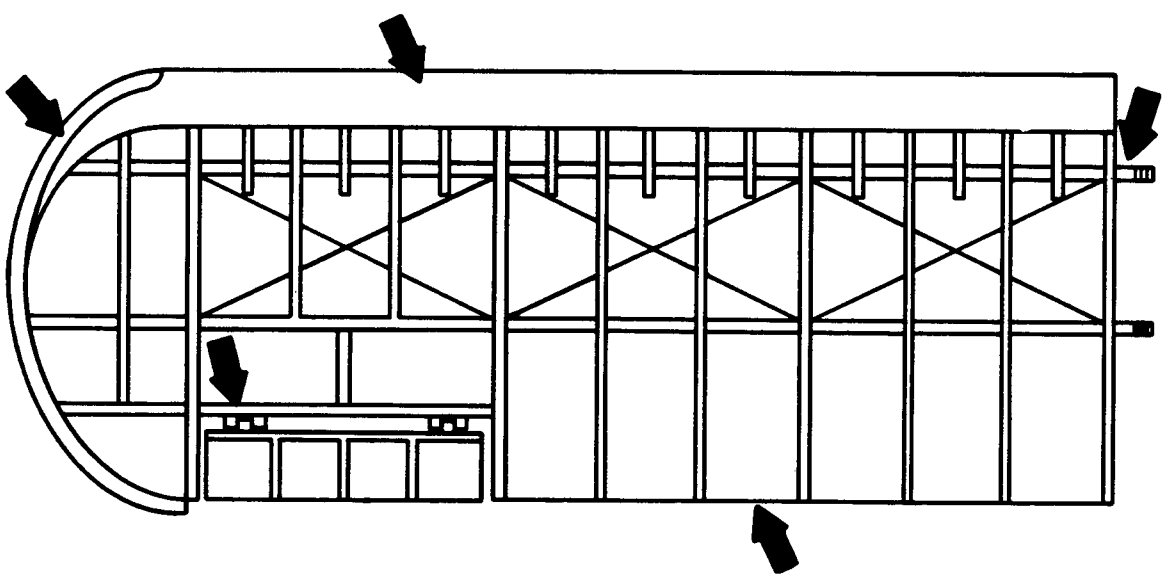

Figure 5-3. Wood structure inspection points.

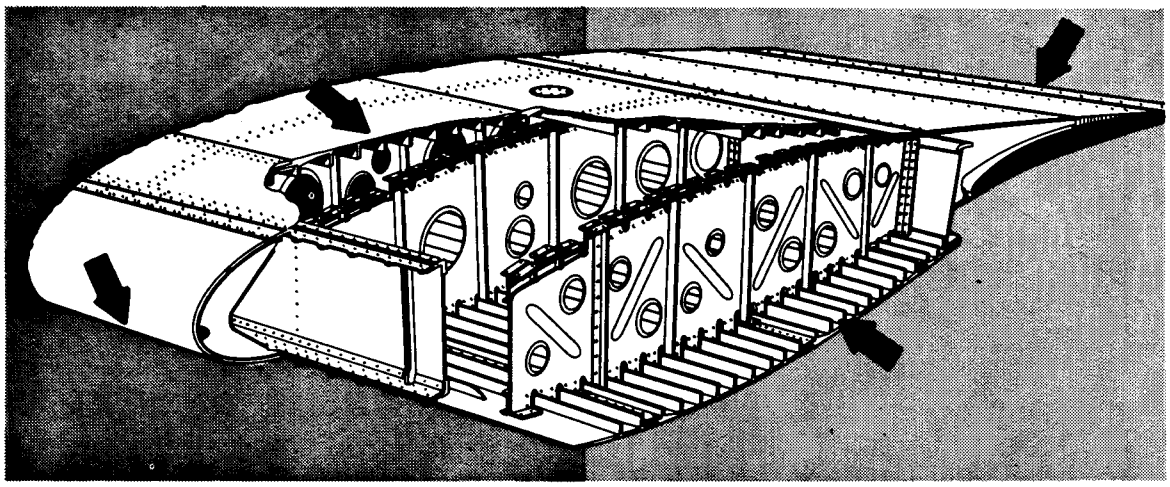

FIGURE 5-4. Metal structure inspection points.

Remove all inspection plates and fairings, and open all access doors so that internal inspection may be made. Examine the internal structure for condition of spars, ribs, compression members, rib lacing, and any internal form of skin attachment. Inspect spars and ribs for cracks, damage, and deterioration. Check the condition of glued joints and the protective finish on all internal structure.

Inspect compression members for security, cracks, kinks, bends, and condition of finish. Inspect drag and antidrag wires for proper tension, attachment, protective coating, and corrosion. Check all fittings attached to spars or ribs for security, protective coating, and corrosion. Check all forms of internal skin attachments for proper security.

Any defect or questionable item in the wing structure should be brought to the attention of qualified maintenance personnel.

Inspect movable surfaces (ailerons, flaps, and trim tabs) for proper operation. Check for loose or pulled rivets, distortion, and loose fabric or skin attachment. Examine hinges and horns for security of attachment, breaks, bends, loose or worn pins, proper lubrication, and safetying.

No repairs, refinishing, or repainting of balanced control surfaces (ailerons, elevators, rudders, and trim tabs) may be accomplished unless the surface is rebalanced. Control imbalance may cause a dangerous vibration or flutter condition. Rebalancing may only be accomplished by certificated personnel.

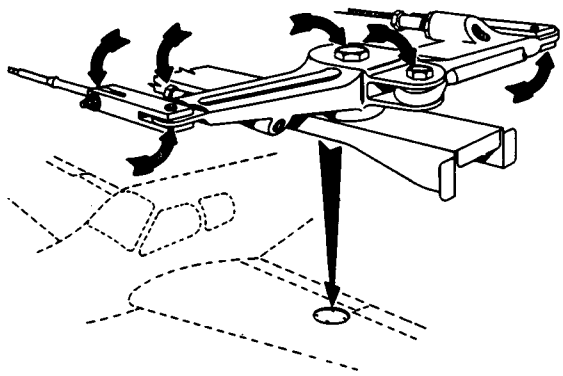

FIGURE 5-6. Control bellcrank checkpoints.

Examine the control mechanism for freedom of movement and proper operation. Inspect bellcranks for cracks, alignment, and security. Check cables for proper tension, fraying, wear, and proper routing through fairleads and pulleys.

Inspect hinges for breaks, cracks, distortion, and security of attachment.

Refer to the manufacturer's recommended procedures for lubrication.

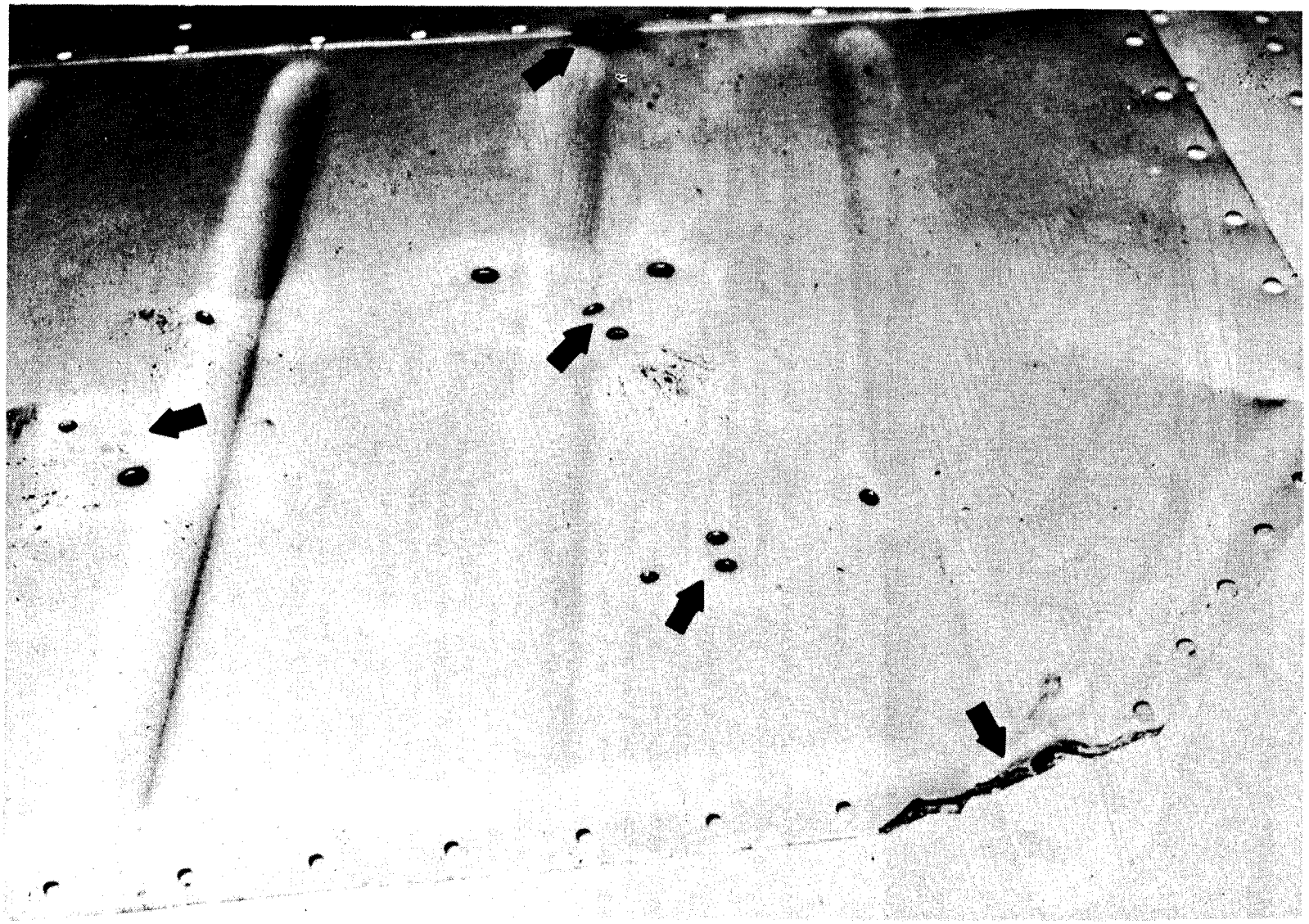

FIGURE 5-5. Lightning damage—flap, lower surface.

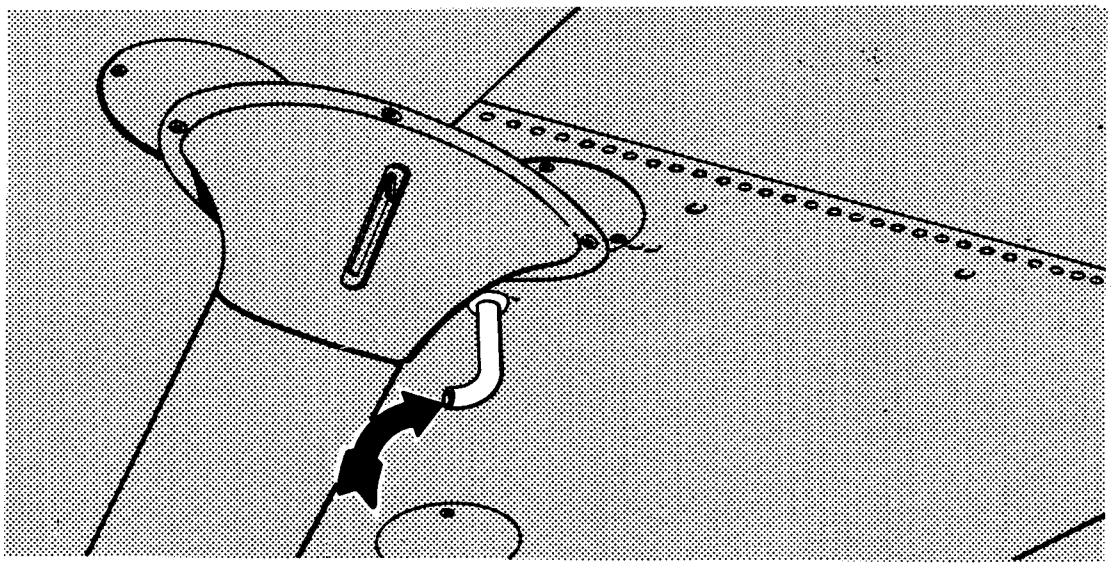

FIGURE 5-7. Fuel tank vent.

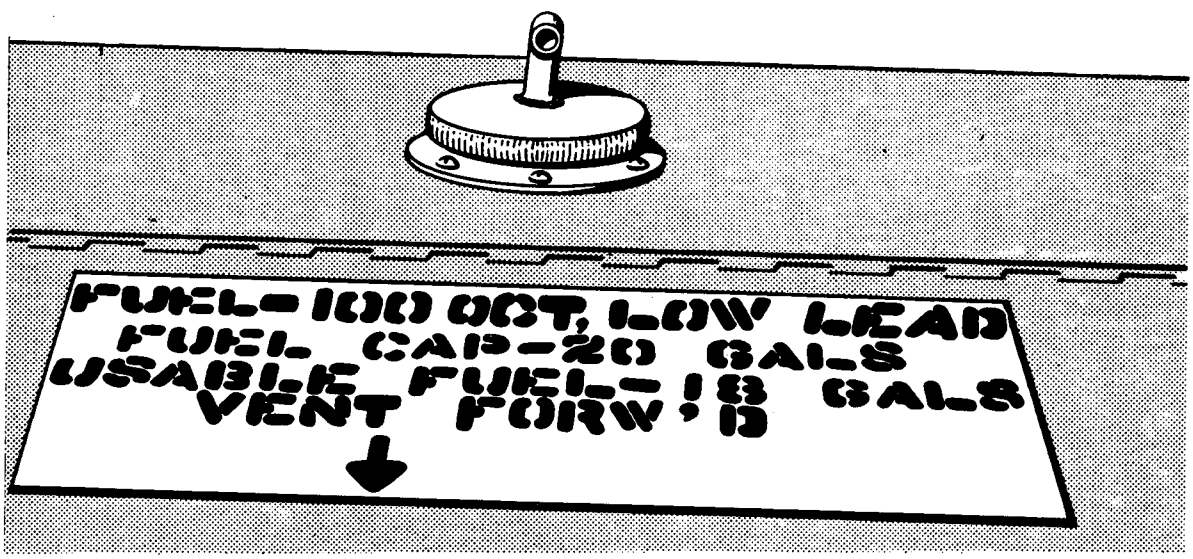

FIGURE 5-8. Fuel cap, vent, and placard.

Inspect fuel tanks for security of mounting and signs of leakage. Ensure that filler caps are secure and the vent is in the proper location and free from obstructions. Check fuel lines and connections for leaks, cracks, security of attachment, and chafing. Be sure overflow and drain lines are not kinked or broken and are properly routed to the outside air.

Improperly placed vents and lines that are kinked or otherwise distorted can cause "fuel starvation" and engine stoppage. As a precaution against using the wrong grade of fuel, make sure a legible placard is located at or near the fuel tank filler neck.

Inspect pitot tubes or masts for obstructions, distortion, and security. Make sure static vents

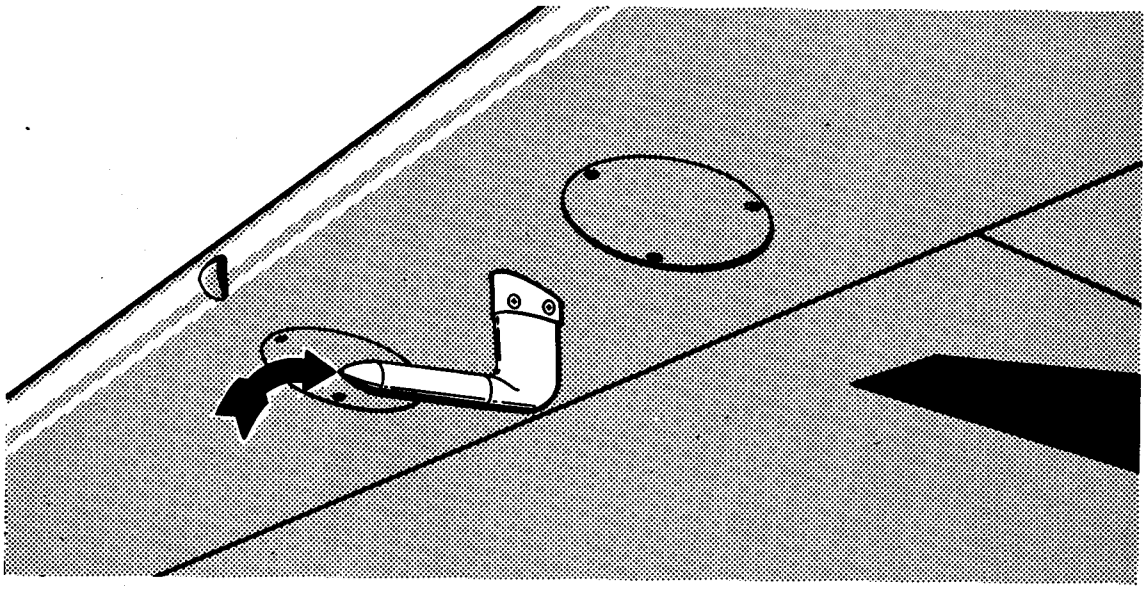

FIGURE 5-9. Pitot mast, airspeed.

(ports) are clean and free from obstruction. Periodically, drain and clean out pitot and static lines. Care must be used to ensure drains are properly closed since leaks have an adverse affect on the accuracy of instruments in the system.

Ensure that wiring is routed so that it cannot possibly become entangled with movable mechanisms. Inspect all wiring for chafing, proper installation, and security. Check installation and condition of grommets, plastic tubing, adapters, and proper taping.

Inspect leading edge of wing for damage. Inspect wing tips for damage and/or security of attachment.

The lens in the figure has been damaged by solvent and/or cleaning agents and age. Damaged or weakened lenses must be replaced since their failure can lead to severe wing damage. Inspect retractible landing lights for proper extension, retraction, and general condition.

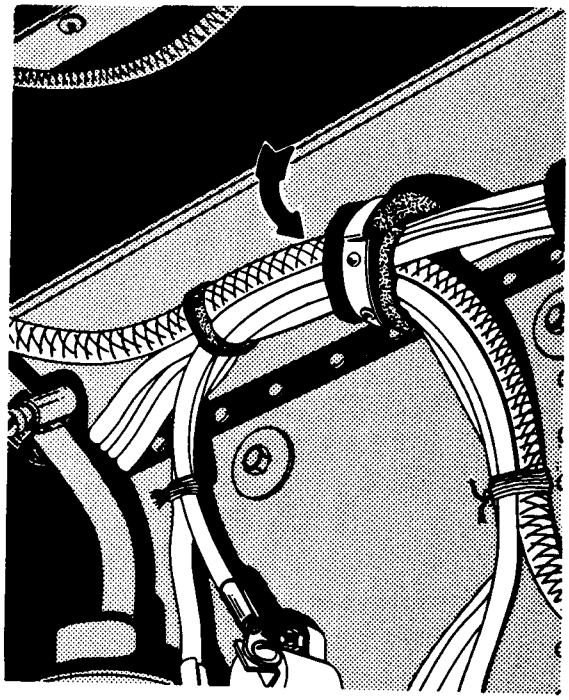

FIGURE 5-10. Electrical wiring, proper routing.

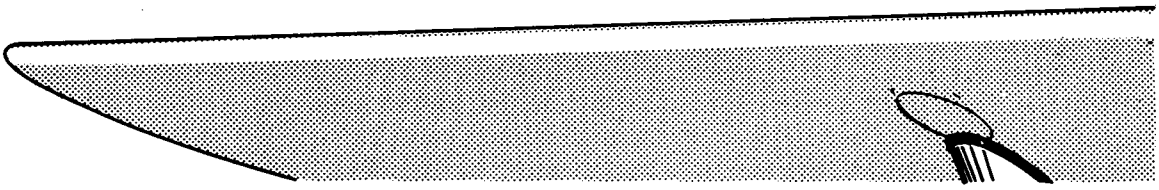

FIGURE 5-11. Satisfactory leading edge of wing.

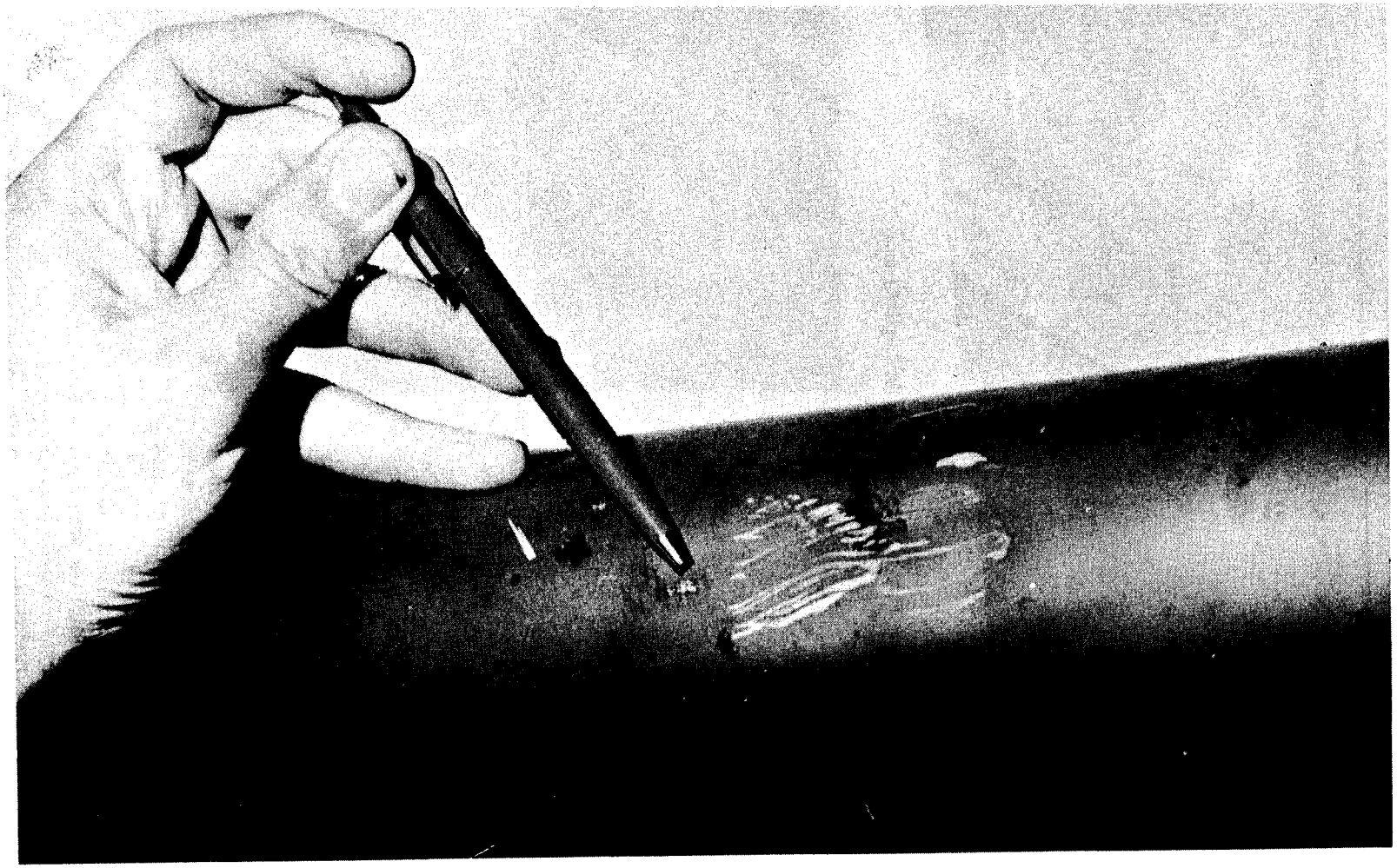

FIGURE 5-12. Dented leading edge of wing.

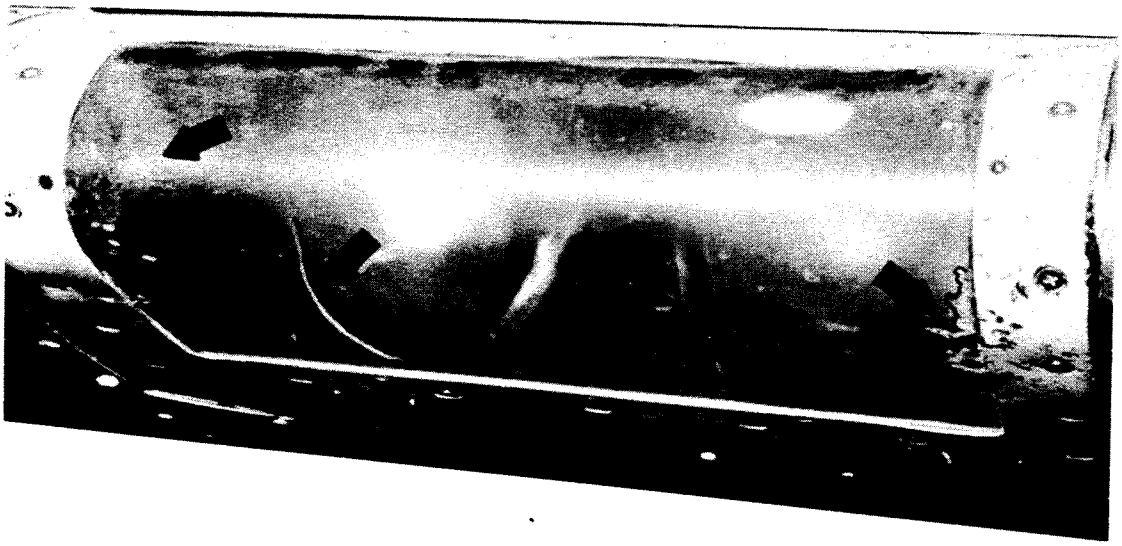

FIGURE 5-13. Damaged landing light lens.

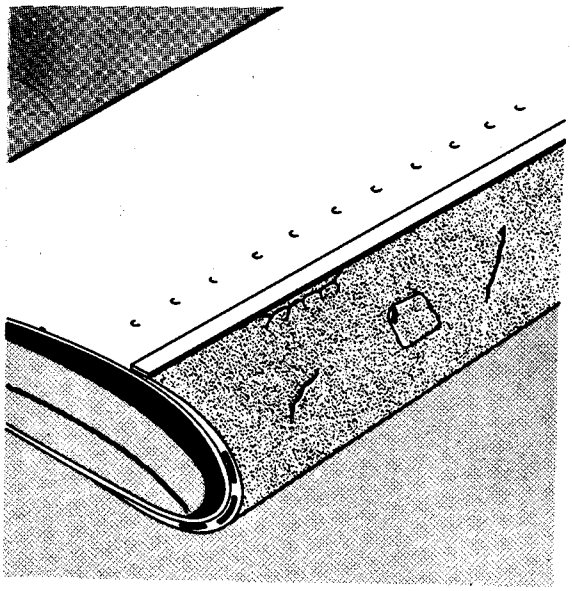

FIGURE 5-14. Deicer boot damage.

Inspect deicing boots for proper inflation and deflation. Check for punctures, bruises, loose patches, and security of attachment. Examine deices pressure lines and fittings for leakage, security, and general condition.

Rubber hose connections from boots to tubing must clear the holes through the structure, and must be secured to prevent distortion of the external surface of the boot.

If thermal anti-icing (hot wings) is utilized, inspect the ducts for leakage, attachment, and satisfactory installation. Examine for corrosion and other defects.

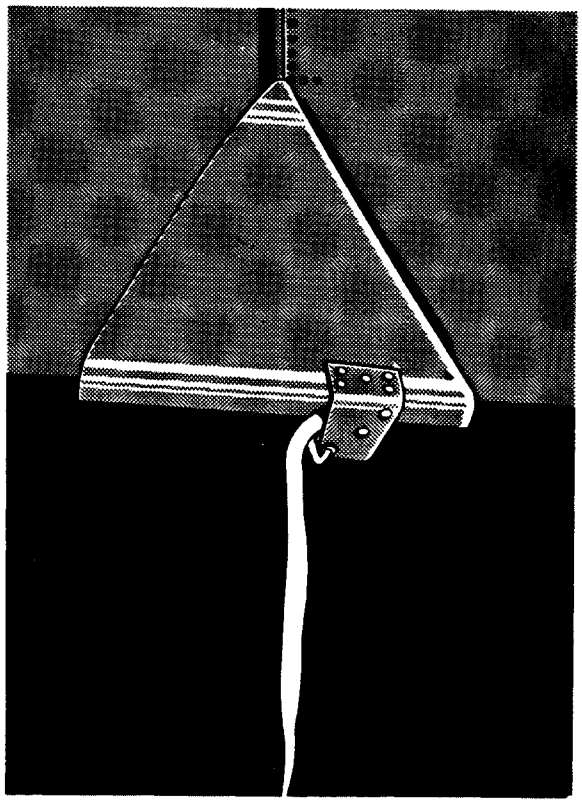

FIGURE 5-15. Block type gust lock.

Inspect control gust locks for condition. Ensure that they release completely and cannot possibly engage inadvertently.

Section 6. EMPENNAGE

Inspect fixed surfaces for damage or defects, loose rivets, screws or bolts, condition of covering, cracked fittings, failure of glued joints, and condition of drain grommets or holes. Examine condition of ribs and stabilizer spars at points of attachment for cracks and elongated bolt holes. Inspect protective coating for deterioration.

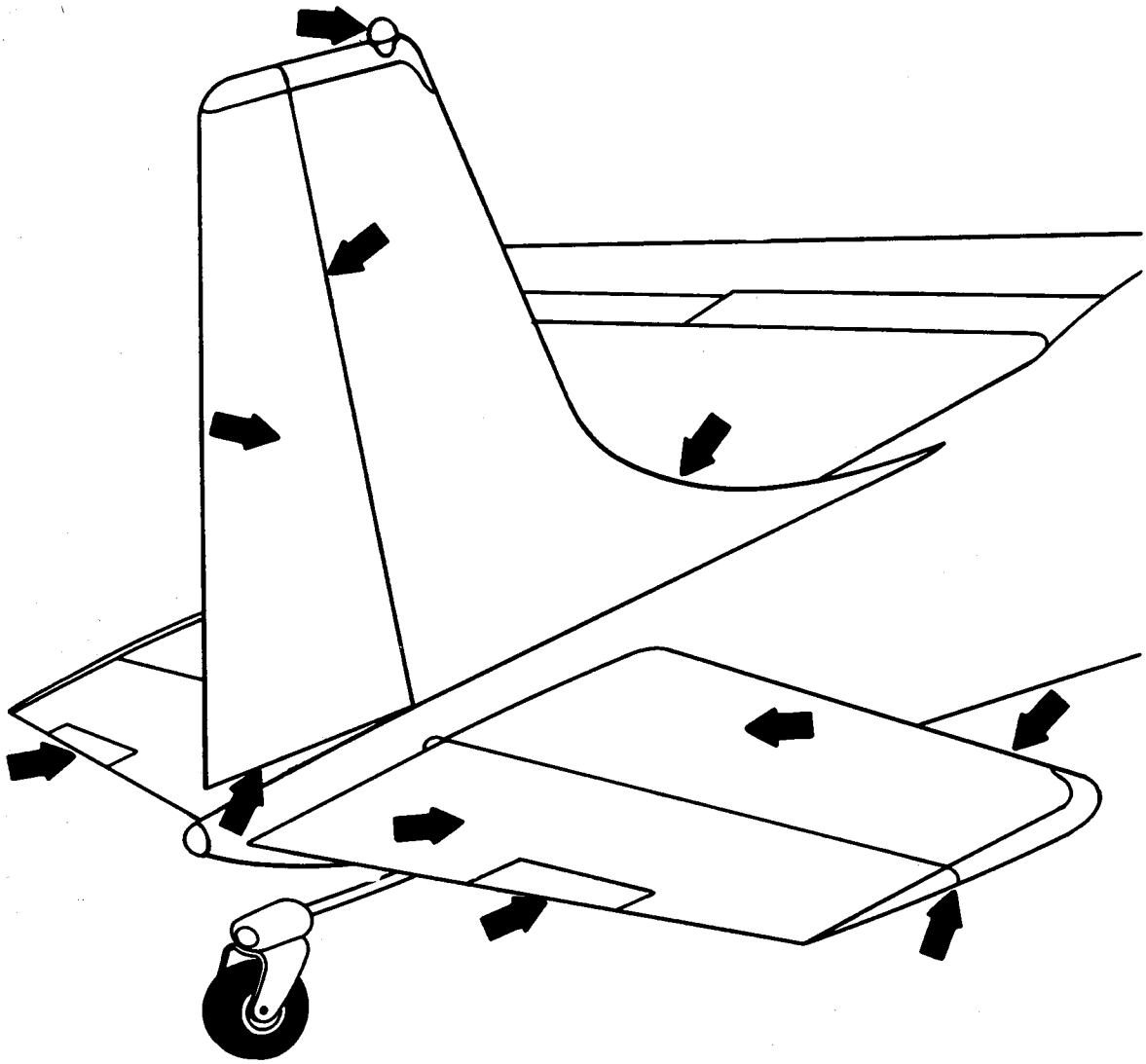

FIGURE 6-1. Inspection chart—empennage.

Examine hydraulic lines for cracks, kinks, dents, or leaks, and inspect for security of attachment and wear due to chafing. Ensure that hydraulic actuators are securely mounted and free from leaks.

Inspect deicer boots for proper inflation and deflation, punctures, bruises, loose patches, and security of attachment. Check feedlines and fittings for leakage, security, and general condition. If thermal anti-icing is used, inspect the ducts for corrosion, leakage, attachment, satisfactory installation, and other defects.

At all times during inspection, be alert for evidence of rust, corrosion, cracked or broken welds, loose rivets or bolts.

Inspect gust locks for condition. Ensure that they release completely and cannot possibly engage inadvertently.

Distortion of fabric or skin may indicate internal structural damage in the general area of the distortion.

Examine fabric or skin for abrasion, tears, cuts or other defects, distortion and deterioration. Check condition of protective finish and drain grommets. Ensure that the fabric or skin attachment to the structure is satisfactory.

Inspect external bracing attachment fittings for distortion, cracks, and security of attachment. Check struts or brace wires for condition and security of attachment. Examine clevises for cracks, warn or damaged threads, and any other defects. Bracing should not be slack since this can cause flutter. Excessive tension might distort or damage fittings and attachments. If there is any question concerning condition of the external bracing, consult a qualified mechanic.

Movable control surfaces such as elevators, rudders and trim tabs, should be examined for damage or defects, loose rivets, loose fabric, or skin distortion, and unsatisfactory glue joints. Inspect hinges and horns for security of attachment, breaks, bends, chafing, loose or worn pins, proper lubrication, and safetying.

Inspect control cables and bolts for wear at horns or bellcranks. Look for such things as

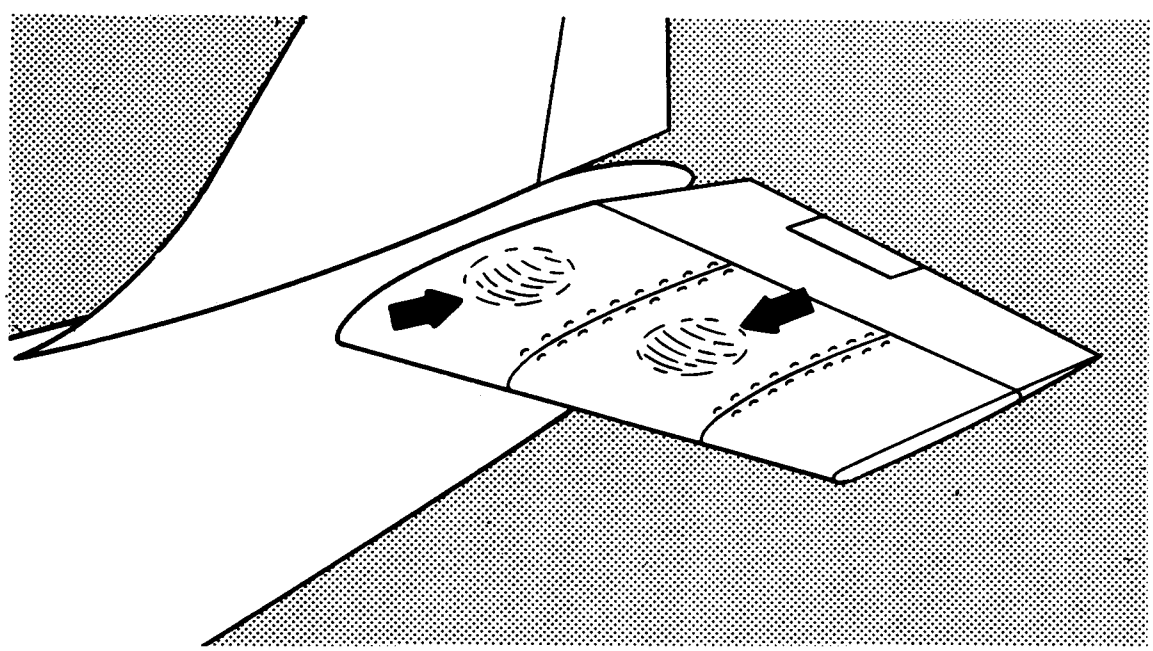

Figure 6-2. Oilcanning of metal skin.

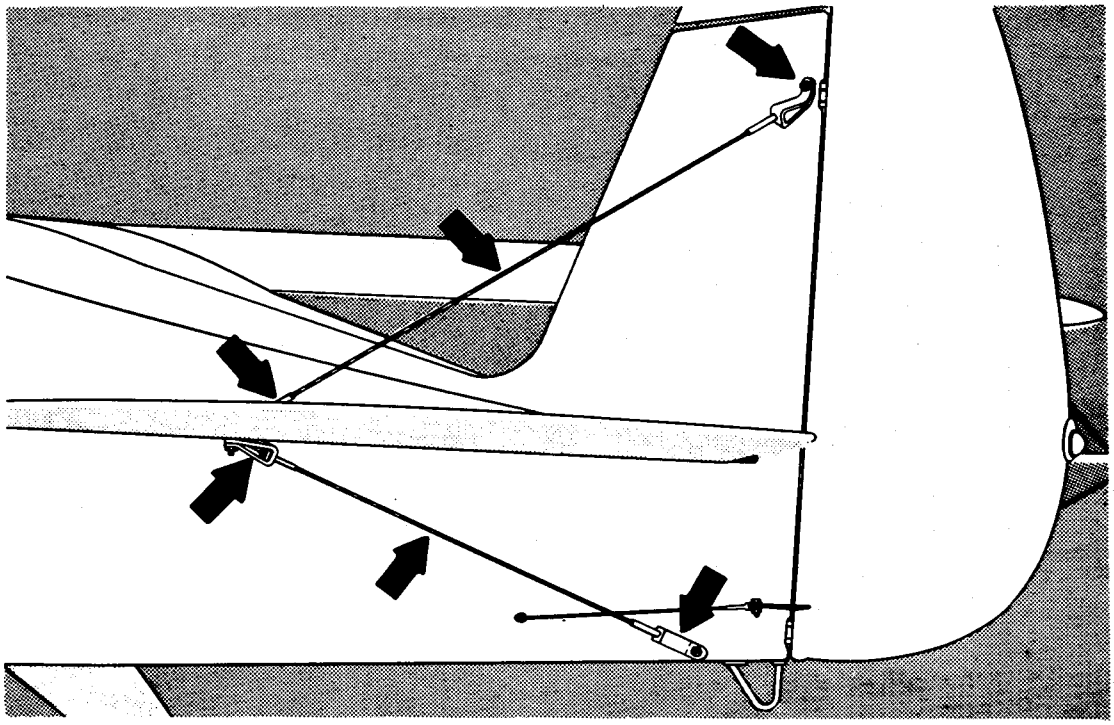

FIGURE 6-3. External bracing checkpoints.

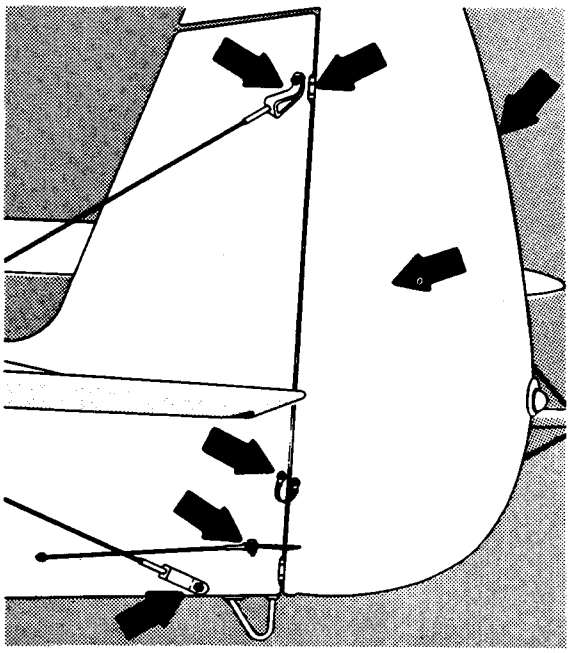

FIGURE 6-4. Rudder checkpoints.

frayed or chafed cables, pulleys not turning, and displaced cable guides. Inspect control system tubing for rust, corrosion, chafing, broken welds, or fittings. Inspect trim adjustment mechanism for excessive looseness, security of attachment, and proper operation of the trim adjustment position indicator.

If excessive clearance is detected in the hinges, a qualified mechanic should determine corrective action needed.

If the aircraft is trimmed by either an adjustable stabilizer or trim tab, it must operate freely throughout the designed range of travel. Lubricate as required, following the manufacturer's recommendations.

Inspect navigation lights for condition and operation. Check wiring for chafing, proper installation, and security of attachment. Check installations of grommets, plastic tubing, adapters, and proper taping.

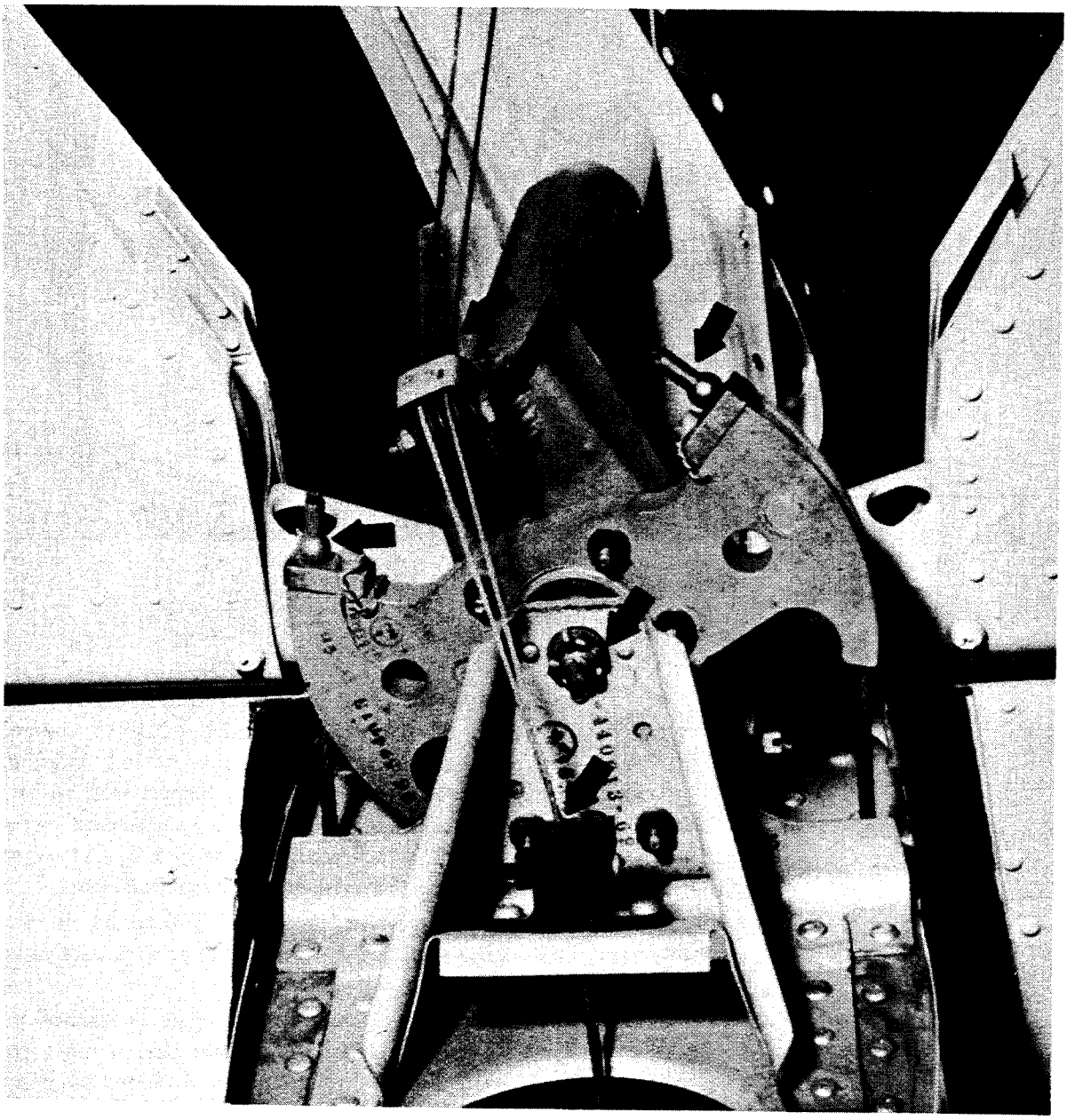

Figure 6-5. Rudder quadrant.

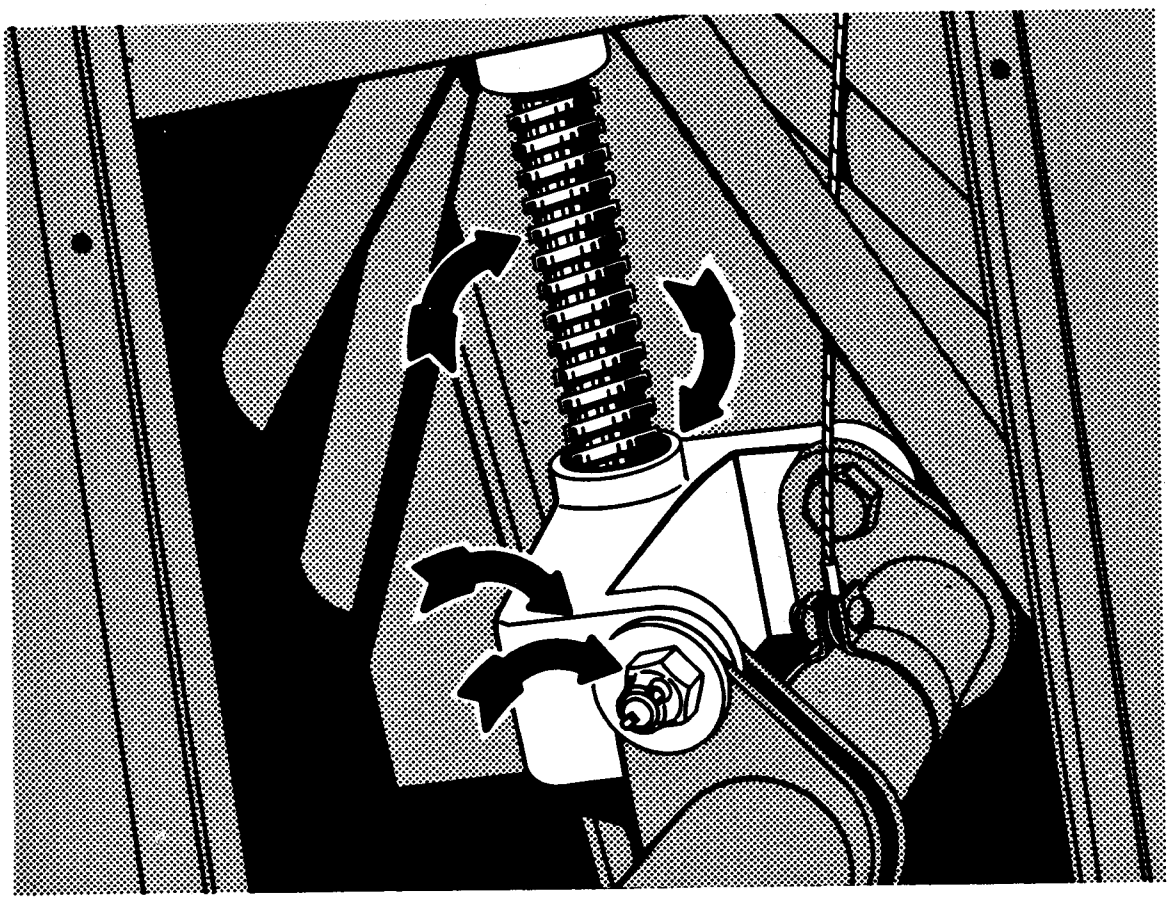

FIGURE 6-6. Stabilizer adjuster checkpoints.

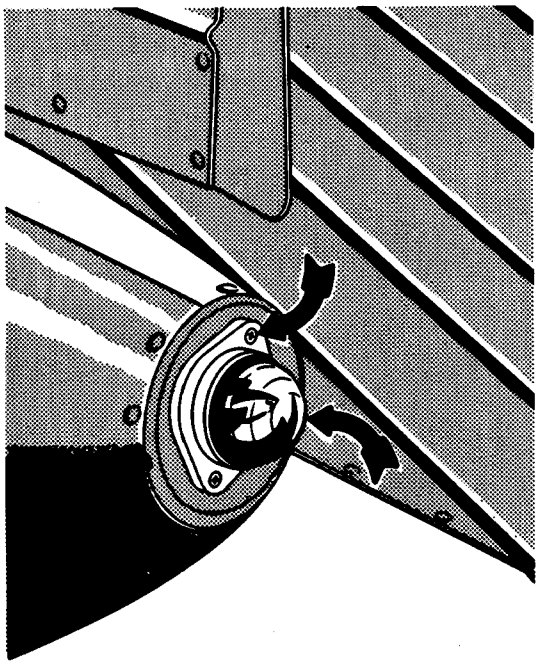

FIGURE 6-7. Position light checkpoints.

Section 7. PROPELLER

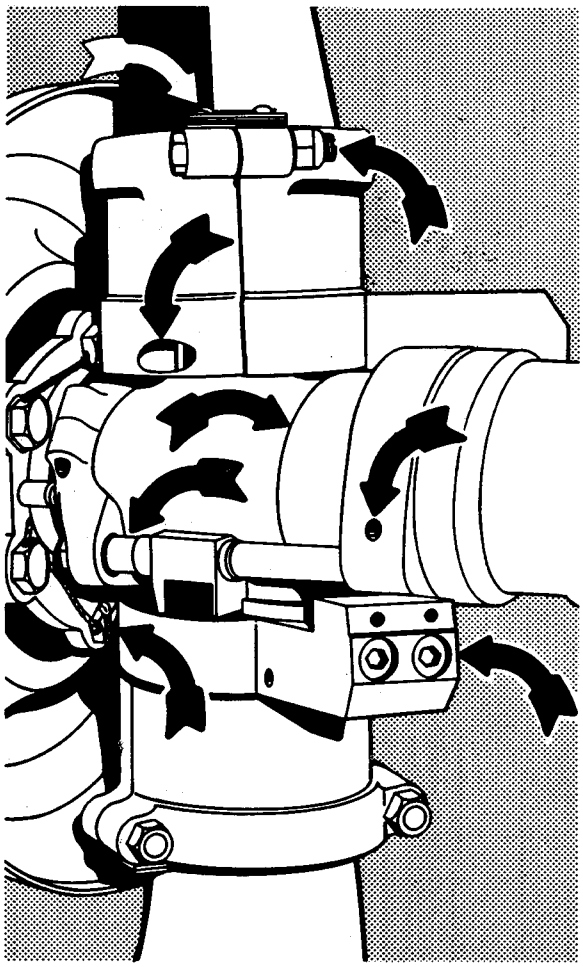

FIGURE 7-1. Inspection chart—propeller.

If unsatisfactory conditions are found while inspecting the propeller, a qualified mechanic should be consulted to determine the corrective action necessary. All propeller repairs must be accomplished by either the manufacturer or a propeller repair station except some minor repairs which may be done by a certificated mechanic. Hubs should be lubricated as recommended by the manufacturer, using specified lubricants. Care should be used and the manufacturer's instructions followed exactly when lubricating propellers to prevent introduction of imbalance. Such imbalance, even though hardly perceptible from the cockpit, can cause extensive damage to the propeller, engine, and airframe through resulting vibration.

A propeller should never be used as a handhold for moving an aircraft. The thrust loads imposed on a propeller are much lighter than normally expected and are imposed while the propeller is rotating and subjected to centrifugal loads. The propeller components are designed for the combination of these loads, and using the propeller for a handhold may severely damage it, even though the damage may not be apparent.

Inspect the hub for corrosion, cracks, oil leaks, security of attachment, and safety. En-

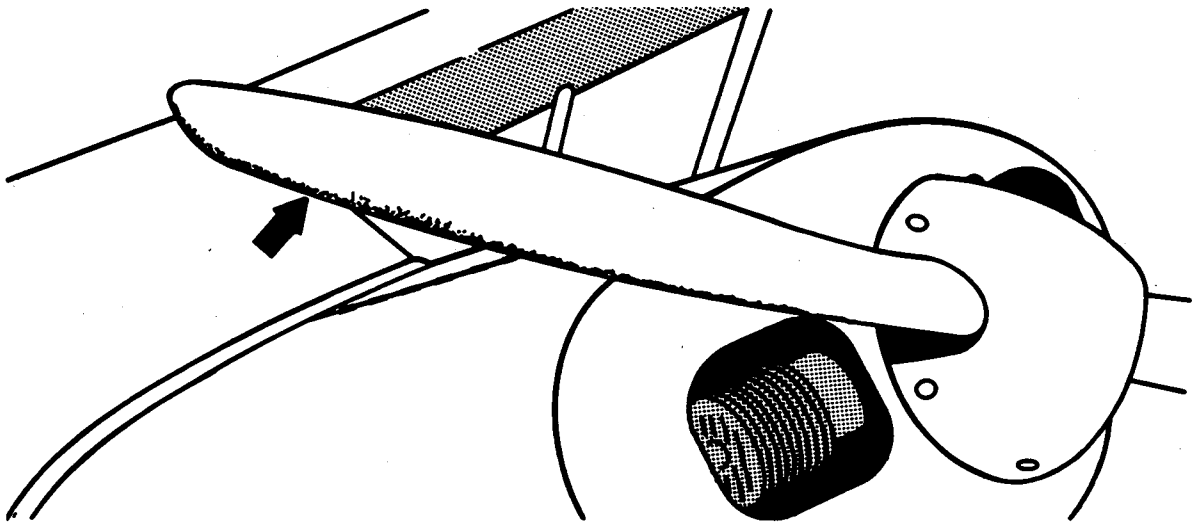

FIGURE 7-2. Damaged metal blade.

sure that propeller retainer bolts are tight and properly safetied.

Inspect metal blades for corrosion, cracks, nicks, and scratches, particularly on the leading edge of each blade from the tip inboard. Even very small nicks and scratches set up stress concentrations which can lead to structural failures, especially in the propeller blades. Propellers should be inspected at preflight and postflight. This permits repairs to be made to scratches and nicks before further operation and with less likelihood of delaying a trip. Remember, the longer a scratch or nick exists the greater the probability of failure.

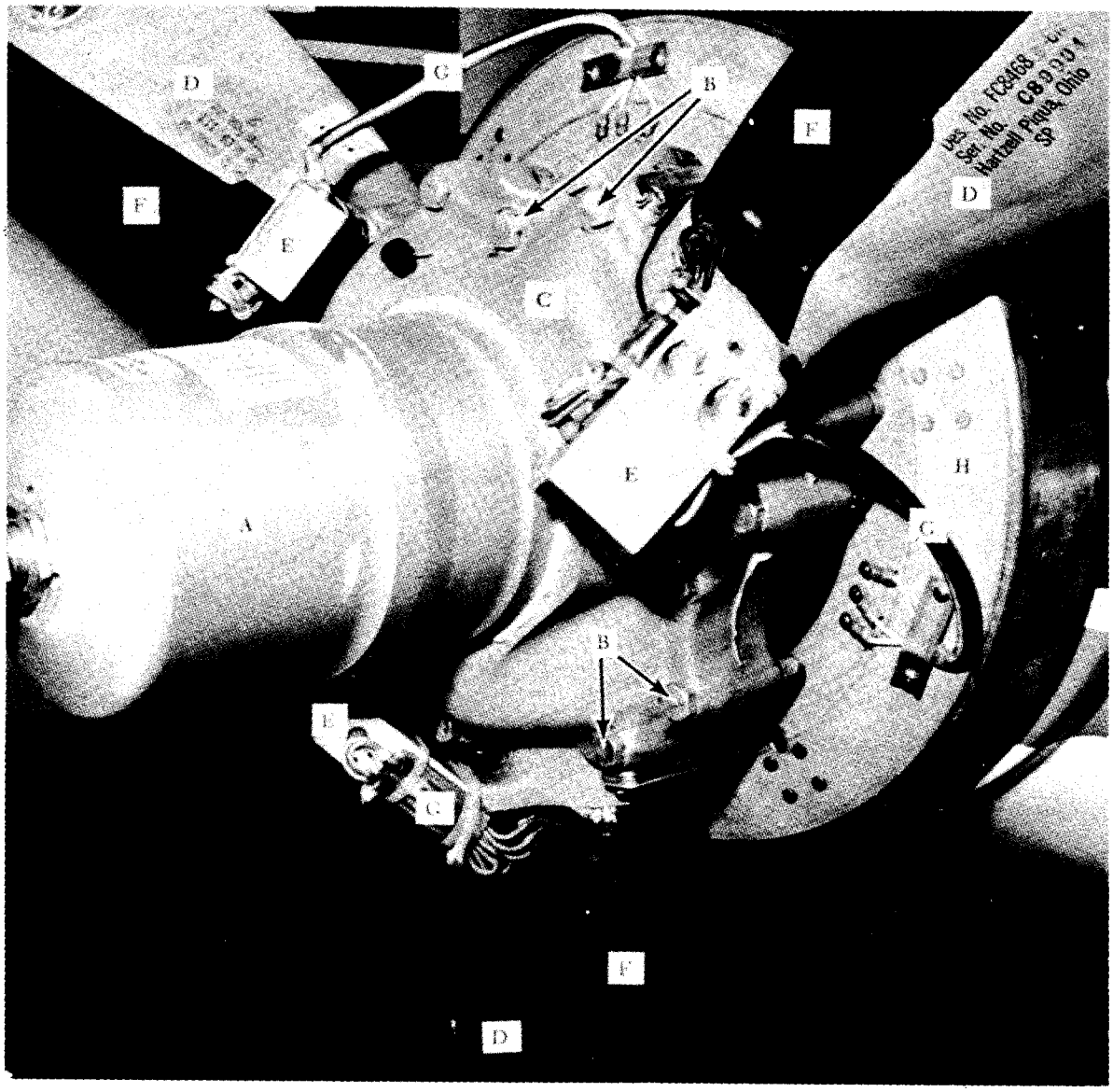

A. Dome.
B. Hub bolts.
C. Hub.
D. Blade.
E. Counterweight.
F. Deicer boot
G. Deicer boot leads.
H. Spinner bulkhead.

FIGURE 7-3. Three-blade propeller checkpoints.

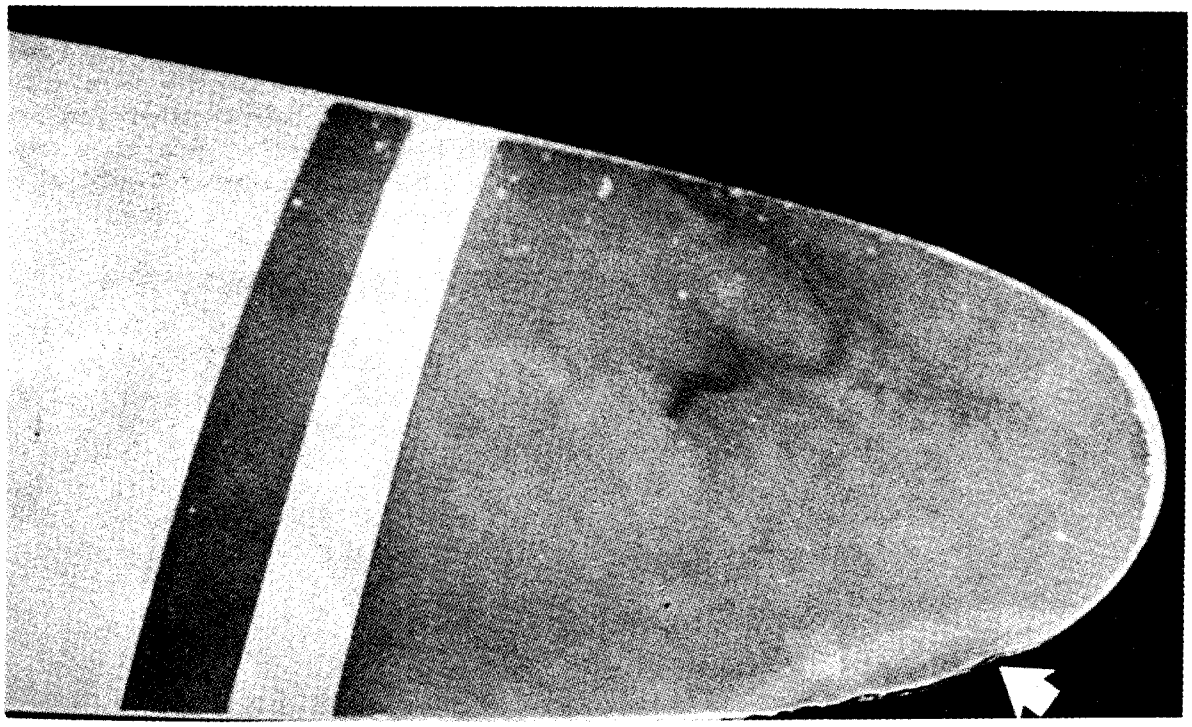

FIGURE 7-4. Propeller tip damage.

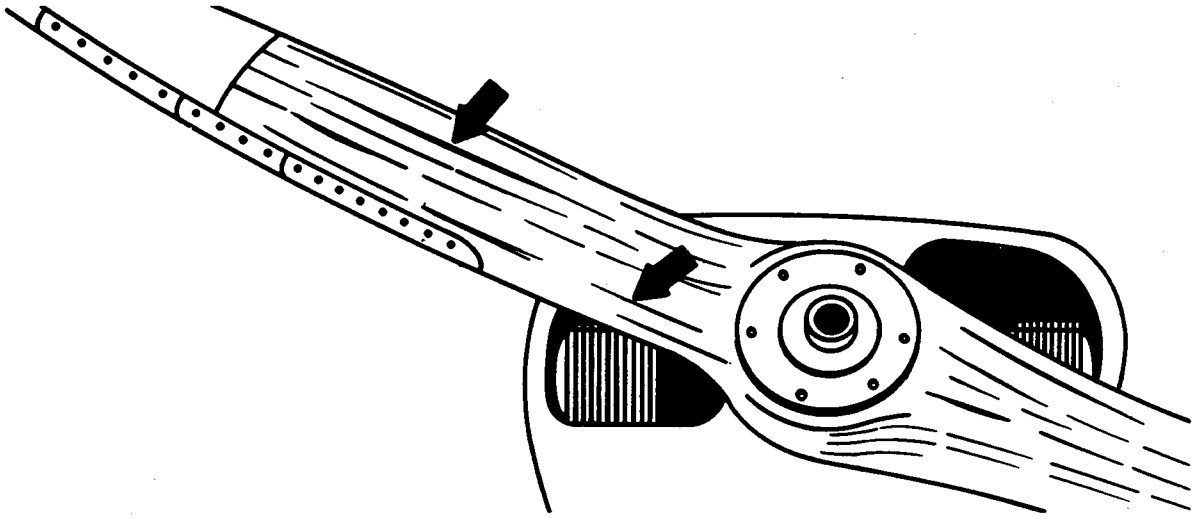

FIGURE 7-5. Wood propeller blade—cracked and separated laminations.

This is an example of a propeller blade tip which has been damaged by lightning. Damage such as this should alert pilots and mechanics to the probability of internal damage due to internal arcing.

Wood or composition blades should be inspected for condition of metal tipping and leading edge strips. Check for loose rivets or screws, separation of soldered joints, and other signs of creeping or looseness of the metal

tipping. Check for lamination separation, especially between the metal leading edge and cap. Ensure that tip drain holes are open so that the centrifugal force of the revolving propeller will dissipate excess moisture. If other than a fixed-pitch propeller, make certain that the blades are installed in the hub satisfactorily and properly safetied. Wood blades installed into metal hubs should be frequently examined for cracks extending outward on the blade.

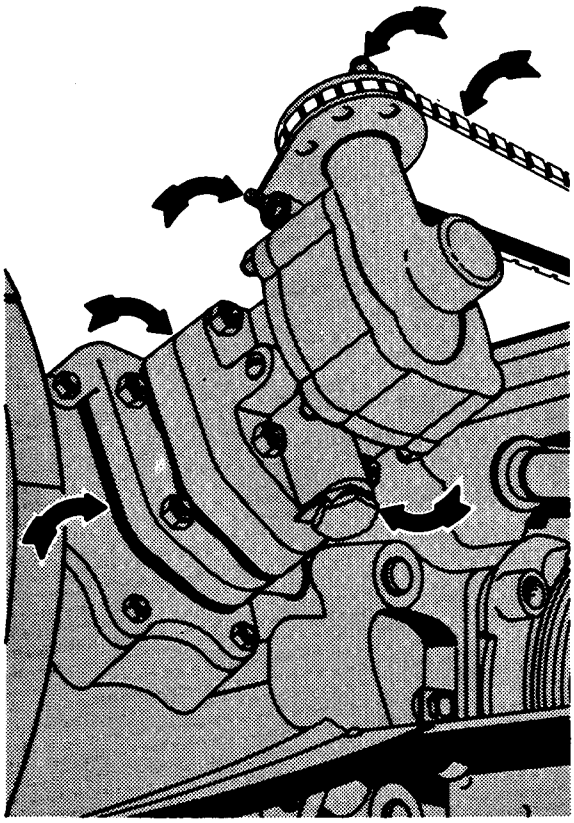

Figure 7-6. Propeller governor checkpoints.

Inspect the propeller control system for security of attachment, oil leaks, freedom of movement and full travel. Inspect wiring for condition, routing, damage, and chafing. Inspect tubing for security, kinks, scratches, oil leaks, and chafing. Ensure that all exposed nuts are properly torqued and safetied.

The control system may incorporate a full feathering system including relays, solenoids, governors, or control valves, and distributors. Inspect the various external components of

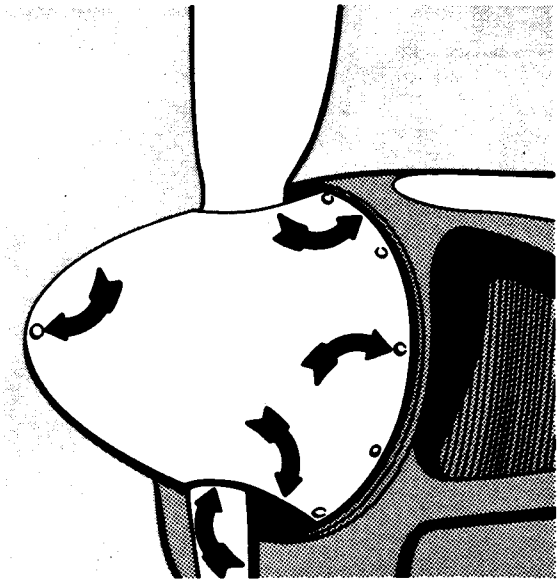

Figure 7-7. Propeller spinner checkpoints.

the system for security of attachment, oil leaks, chafing, or damage to the electrical wiring. Check for loose connections and proper safetying.

Certain engine-propeller combinations require installation of a spinner for proper engine cooling. In these cases, the engine should not be operated unless the spinner is properly installed.

Inspect the propeller spinner and spinner mounting plate for security of attachment, cracks, chafing of the blades, proper safetying, and any other defects.

Cracked spinner assemblies should be repaired or replaced immediately by a certificated person to prevent the possibility of parts breaking away in flight and damaging portions of the aircraft structure, or injuring personnel during operation on the ground.

Inspect the fluid anti-icer assembly for general condition and security. Ensure that the slinger rings, nuts, and delivery tubes are properly installed and that the nuts holding the delivery tubes to the slinger ring sockets are securely fastened. Inspect reservoir and lines for proper installation, chafing, or leakage. Check connections for condition and security of clamps. Check fluid level and follow manu-

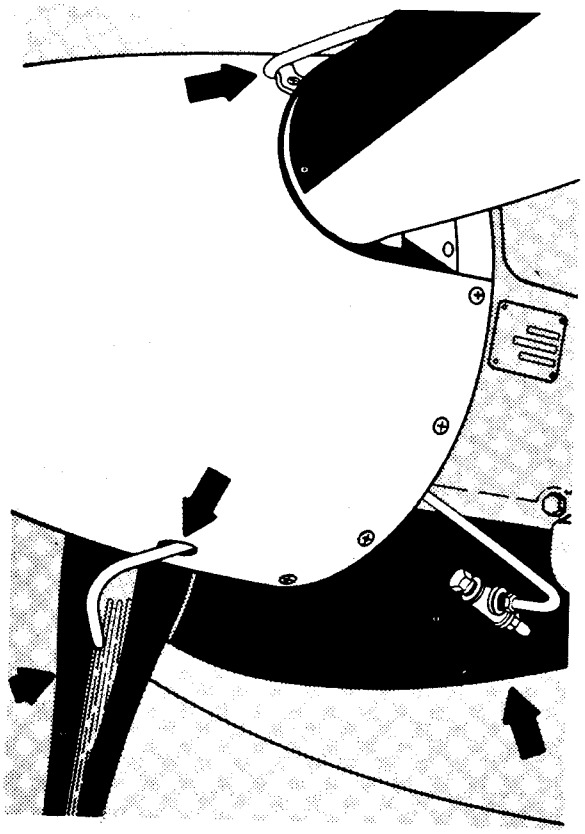

FIGURE 7-8. Propeller liquid anti-icing system checkpoints.

facturer's instructions when filling reservoir with anti-icing fluid.

If the system depends on electrical heat for the removal of ice, inspect the deicing shoe for damage and condition of the electrical connection to the blade. Examine blade slip rings and brush holders for condition and attachment. Check cockpit controls for condition and satisfactory operation. Inspect wiring for chafing, routing, deterioration, and security.

Defects noted in the deicing system should be referred to a certificated mechanic for adjustments and repairs. Severe damage to the deicing shoe will require replacement. Normally, small cuts may be repaired with a sealer specified by the manufacturer.

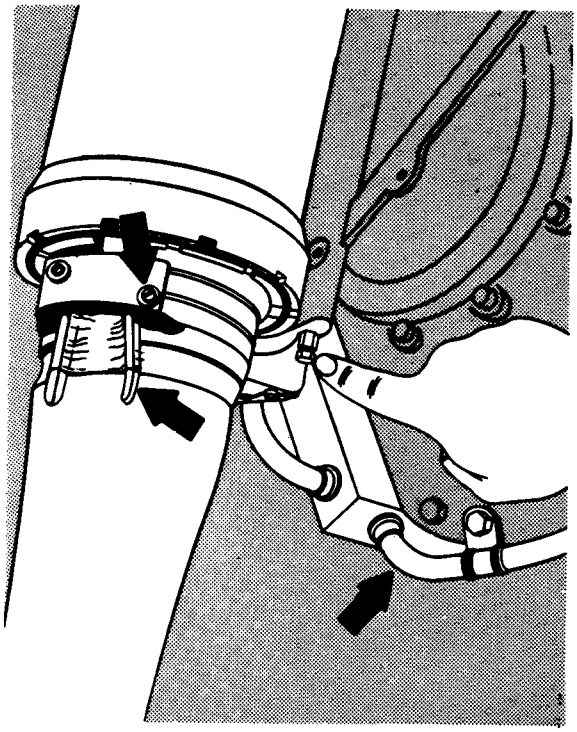

FIGURE 7-9. Propeller electrical deicing system checkpoints.

Section 8. RADIO

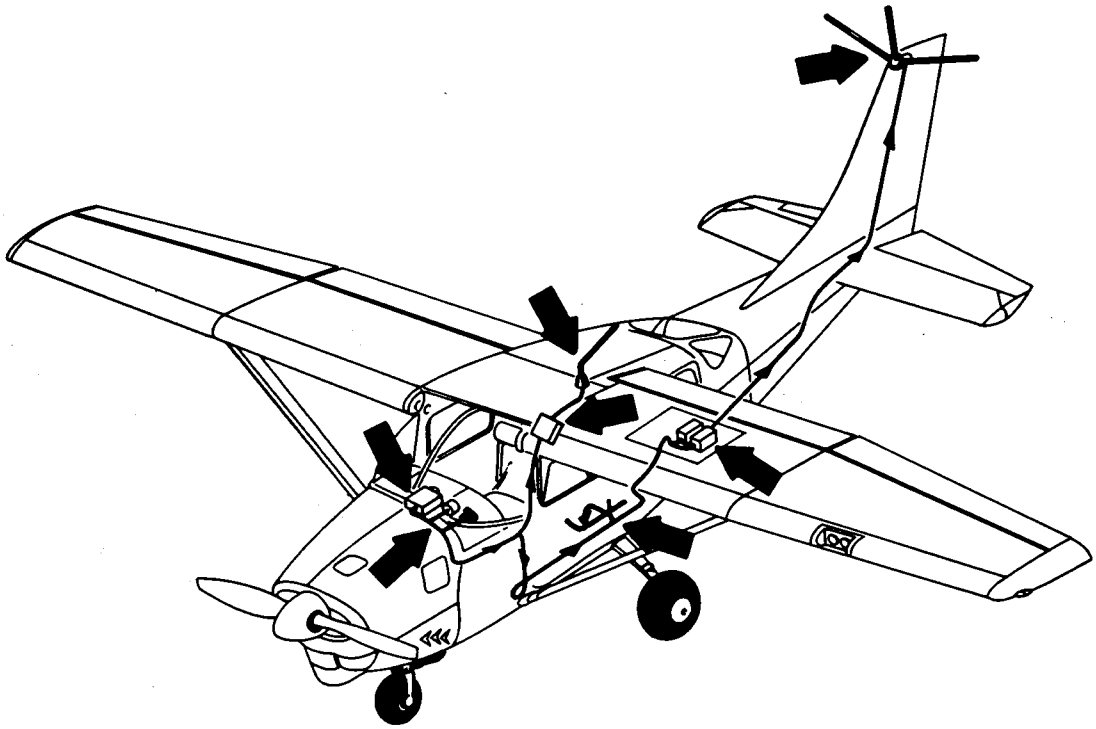

FIGURE 8-1. Inspection chart—radio.

Radio equipment should be removed periodically by certificated personnel to inspect shock mounts and bounding, and to clean and inspect racks and adjacent structure. Plugs and connectors should be opened and inspected for corrosion, dirt, and moisture. Ensure that all plugs and connectors are properly mated and secured.

Disconnect battery ground cable BEFORE removing radio equipment. Check for broken bonding strips. Poor radio reception will generally result from broken bonding strips.

Examine installation of communication and navigation equipment (transceivers, ADF, OMNI, DME, etc.) for security of attachment. Check all jacks, knobs, and switches for se-

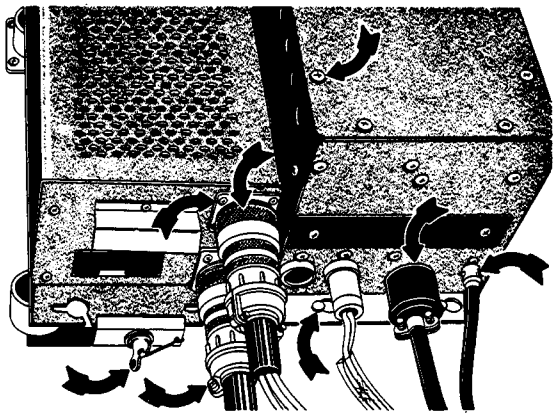

FIGURE 8-2. Communication/navigation equipment installation checkpoints.

curity. Volume controls should work smoothly. Switches should have positive action. Indicator dials should be clean and have proper motion. Check for defective light bulbs. Spare light bulbs and fuses should be readily available in the cockpit or cabin.

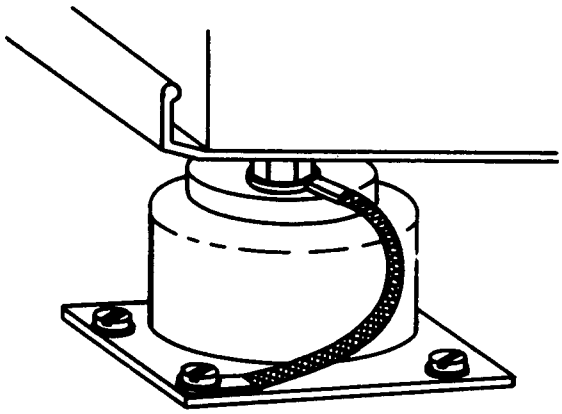

FIGURE 8-3. Bonding radio equipment to shock mount.

Inspect electrical wiring and shielding for defects, chafing, and security. Ensure that connections, terminals, and clips are tight. Look for evidence of shock mounted equipment contacting adjacent components or structure. Inspect fuses for corrosion, continuity, and security.

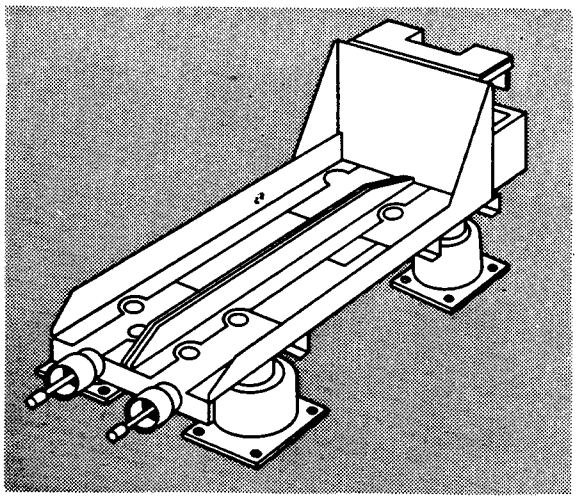

FIGURE 8-4. Communication/navigation equipment shock mount.

Inspect dynamotors for security of attachment and cleanliness. Inspect power supply installation for security of attachment. Check wiring and connections for proper grounding, condition, insulation, and security. Check switches for operation and condition.

Periodically, check the voltage regulator system. Low voltage settings will result in improper radio operation. High voltage setting (over 10 percent) may result in damage to radios, particularly those incorporating transistors.

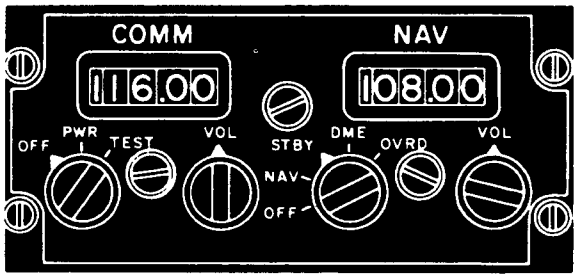

FIGURE 8-5. Typical communication/navigation equipment control.

An operational check should be performed on all equipment during engine warmup. Reception should be free of interference caused by ignition, generators, navigation lights, or any other electrical or mechanical unit.

Headsets and microphones should be inspected for broken or sticking switches, and dirty, worn, or damaged plugs. Inspect cord for wear and damage.

Unsatisfactory operation of communication or navigation equipment should be referred to authorized personnel for repair or adjustment.

Open junction boxes and inspect for extraneous material, security of connections, and condition of wiring and cables. Inspect remote control shafts for condition, security, and ease of operation.

The emergency locator transmitter (ELT) should be inspected for general condition, security of attachment, and other defects. The antenna cable and remote switch cable should be securely attached with no corrosion of com-

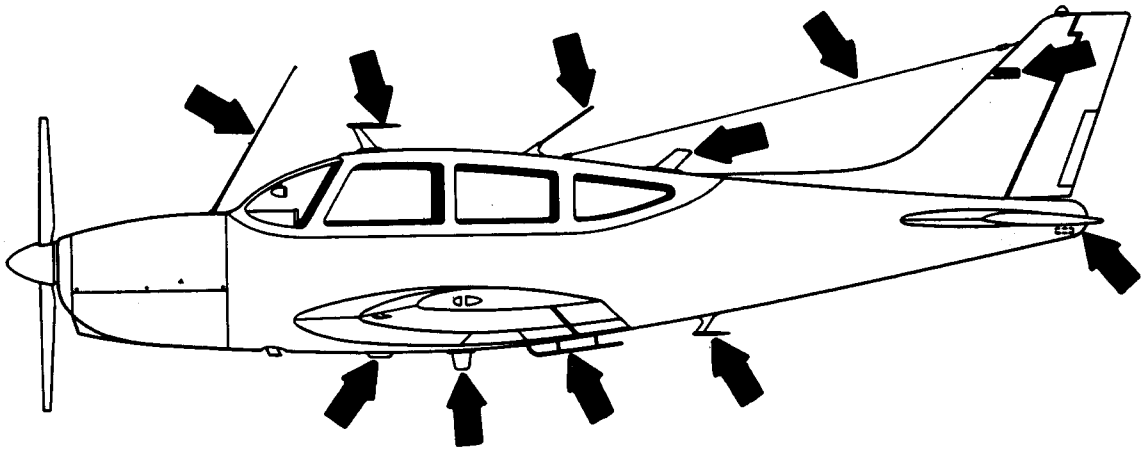

FIGURE 8-6. Antenna installations checkpoints.

ponents and routed so as not to interfere with controls. Be sure that the battery replacement date has not expired. Look for leakage and corrosion of the battery pack or ELT unit if batteries are utilized internally. Inspect the ELT antenna for security, corrosion, or damage. Inspect the cockpit ELT remote function switch for security and proper position. Note: Operational tests may be conducted only at certain times. Generally, operational tests will be performed by repair agencies following maintenance or repair of ELT.

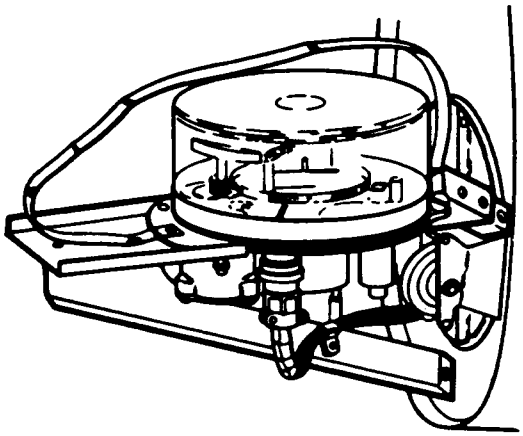

FIGURE 8-7. ADF Antenna—internal loop—tail mount.

Check antennas for condition and security of attachment. Inspect wire antennas for proper tension. Inspect insulators, fittings, terminals, and supporting masts for condition and security. Clean all insulators.

A broken antenna may foul the controls or cause other damage. Inspect rigid antennas and masts for evidence of lightning strikes. Check rubber seals for evidence of cracks or leakage.

Check manual and automatic rotation of automatic direction finder (ADF) loop.

FIGURE 8-8. ADF antenna—fixed loop.

Refinishing an ADF loop housing requires a special paint.

Inspect trailing edge static wicks for proper length, condition, and security.

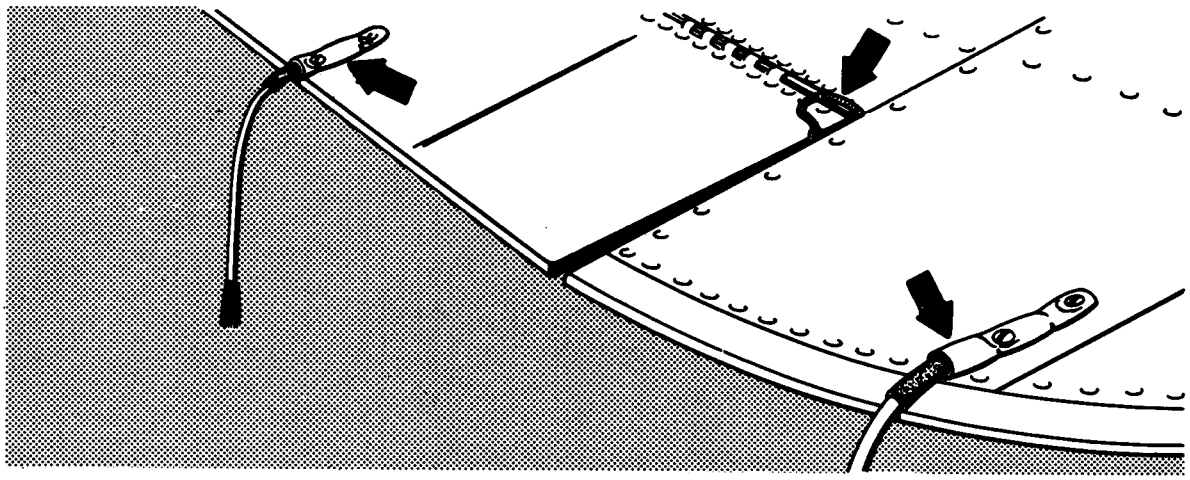

FIGURE 8-9. Bonding wires and trailing edge static wicks.

Section 9. MISCELLANEOUS

Miscellaneous equipment should be inspected for general condition, proper storage, and to ensure that it is readily accessible. Ensure that all equipment is secured so that it cannot interfere with the controls.

Parachutes, lift rafts, flares, and similar emergency equipment should be inspected by qualified personnel within prescribed time periods according to manufacturer's recommendations. All noted defects or discrepancies should be referred to an approved repair facility.

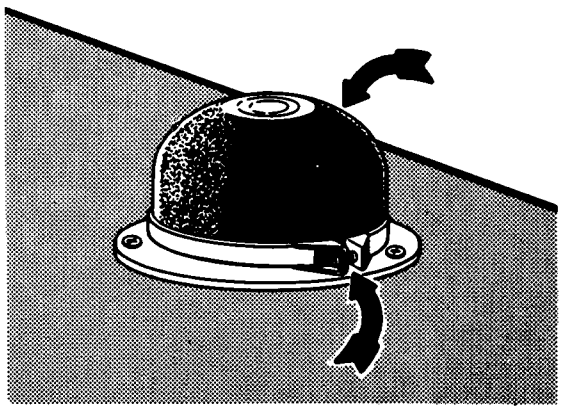

FIGURE 9-1. Rotating beacon installation.

Inspect rotating or flashing beacons for security of mounting, cleanliness, and general condition. Inspect wiring for condition and possible chafing. Check switches for proper operation. Examine connections for tightness, corrosion, and condition of insulation. Ensure that fuses or circuit breakers are in good condition and operating satisfactorily.

Inspect the autopilot system for general condition, security of attachment, and for other defects. Functional checks should be performed in accordance with the manufacturer's instructions.

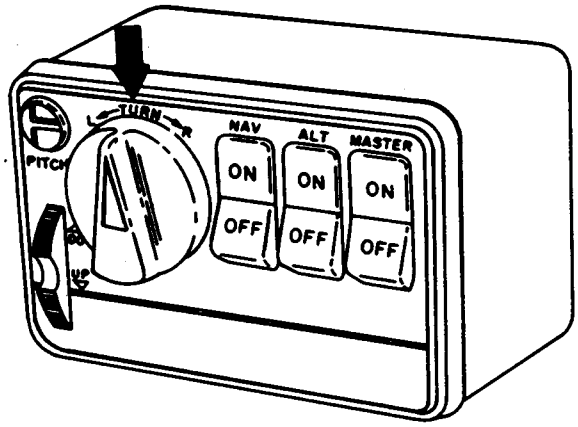

FIGURE 9-2. Autopilot control panel.

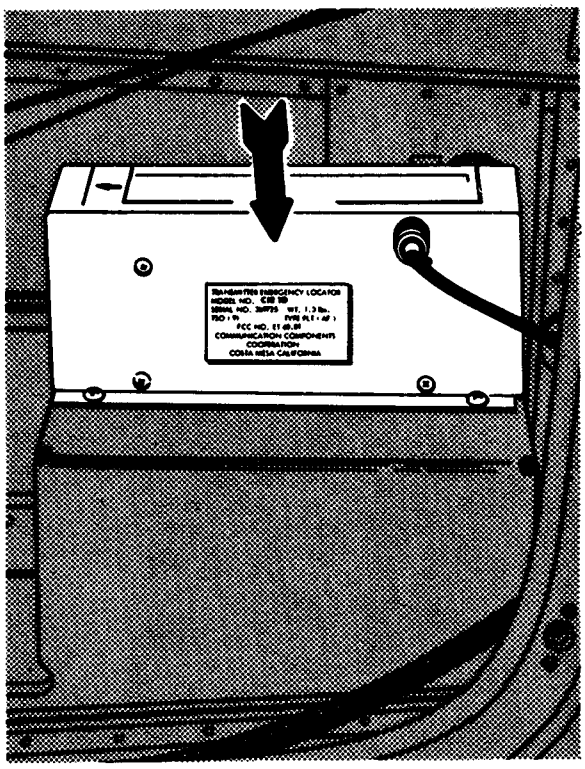

9-3. Emergency locator transmitter – remote mount.

Check ELT mounting and connections for security. Check batteries for expiration/replacement date. Any evidence of corrosion should be investigated by qualified personnel. Perform an operational check periodically.

Fire extinguishers should be checked for indication of being discharged, proper quantity of extinguishant, and location—away from any area of excessive heat or direct sunlight. The first aid kit should be checked to determine the condition and sufficiency of its content.

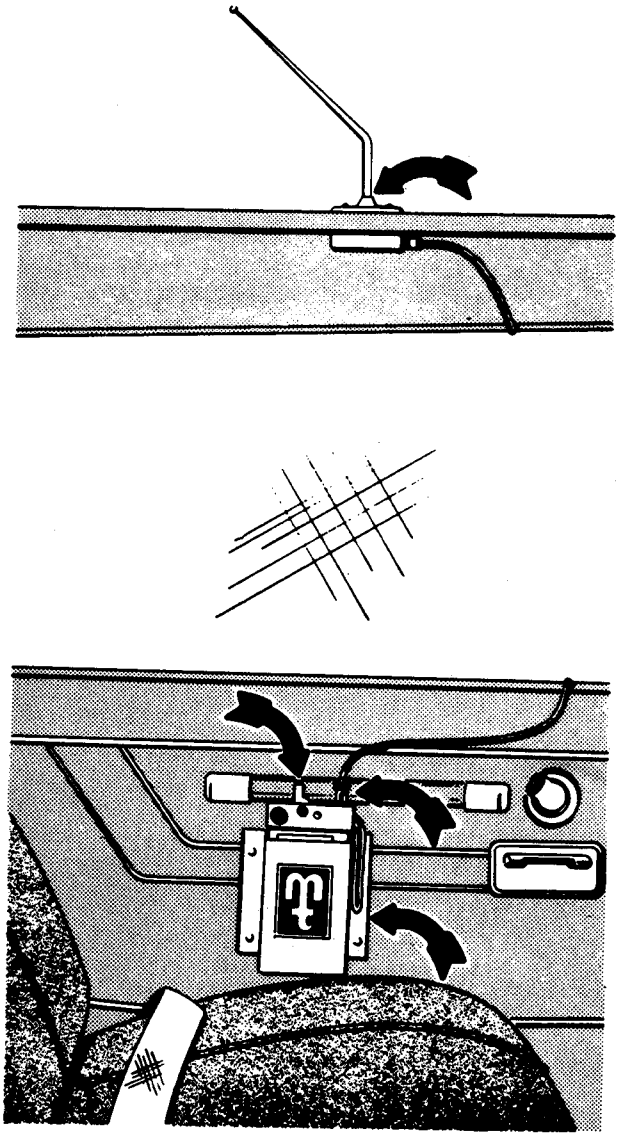

9-4. Emergency locator transmitter – portable mount.

Section 10. PREFLIGHT INSPECTION

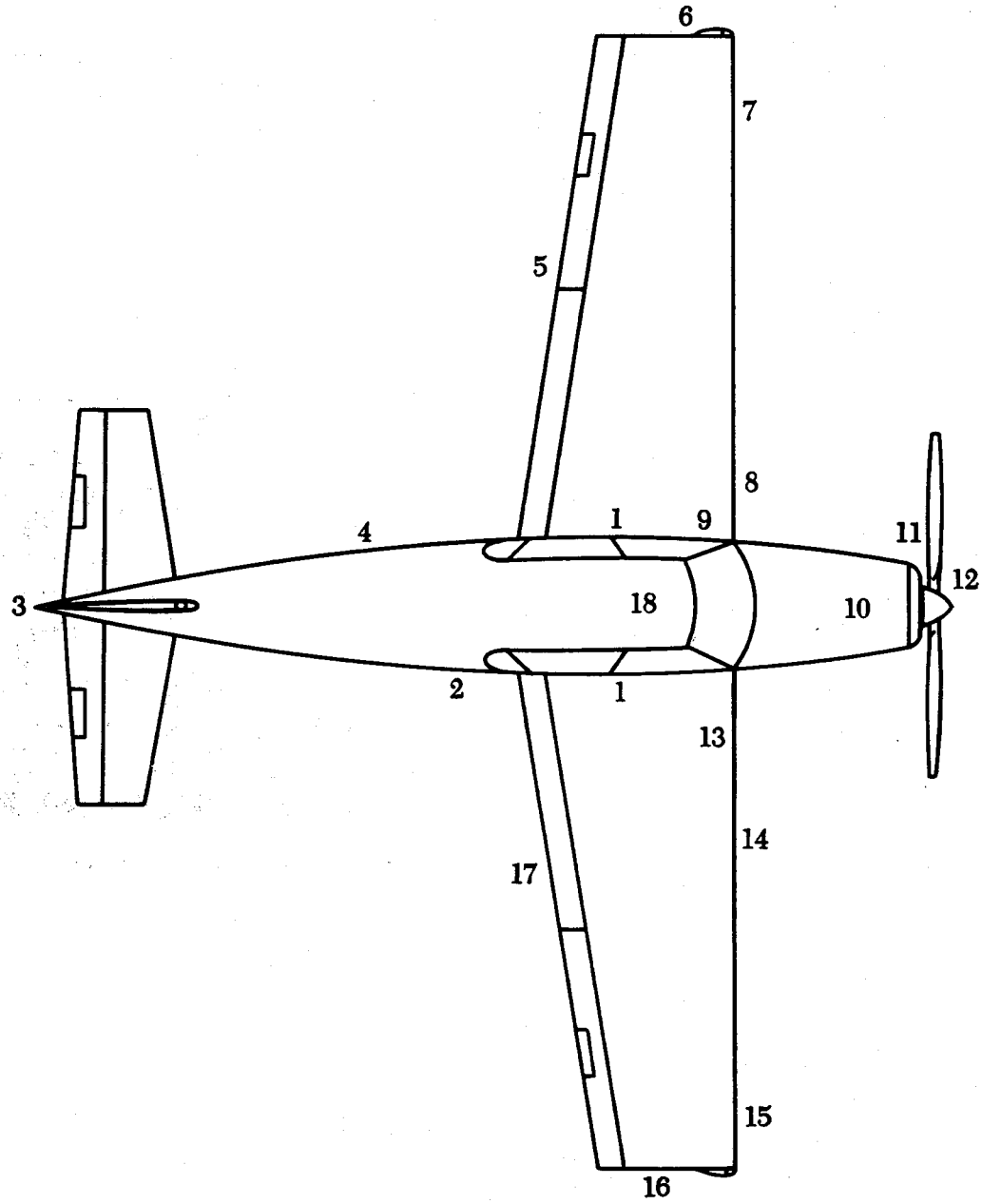

FIGURE 10-1. Inspection chart—preflight.

The following Preflight Inspection Checklist may be used as a guide when developing a preflight checklist for your aircraft. It should be modified to suit the aircraft type and to include the manufacturer's recommendations (normally found in the Pilots/Owners Operation Handbook).

The numbers on the inspection chart correspond to the numbers indicated on the itemized list. By following the numerical route, an effective and organized preflight inspection can be accomplished.

1. The first three items to be accomplished are:

   Battery and ignition switches—OFF

   Control locks—REMOVED

   Landing gear control—GEAR DOWN AND LOCKED

After completion of item Number 1, proceed with the preflight inspection.

Carefully observe the general overall appearance of the airplane.

2. Fuselage: Right side

   Exterior of cockpit doors/passenger door—check for security of hinges and latch lock. Check condition of skin and windows.

   Baggage compartment—contents secured and door locked.

   Airspeed static source—free from obstructions.

   Condition of covering—missing or loose rivets, cracks, tears in fabric, etc.

3. Empennage:

   Deicer boots—condition and security.

   Control surface locks—"REMOVE."

   Fixed and movable control surfaces—dents, cracks, excess play, hinge pins and bolts for security and movable surfaces for full travel and freedom of movement.

   Tailwheel—spring, steering arms and chains, tire inflation, and condition.

   Lights—navigation and anticollision lights for condition and security.

4. Fuselage: Left side

   Same as item 2.

5. Wing:

   Control surface locks—"REMOVE."

   Control surfaces, including flaps—dents, cracks, excess play, hinge pins and bolts for security and condition, movable surfaces for full travel and freedom of movement.

   General condition of wings and covering—torn fabric, bulges or wrinkles, loose or missing rivets, "oil cans," etc.

6. Wing tip and navigation light—condition and security.

7. Deicer boots—general condition and security.

   Landing light—condition, cleanliness, and security.

   Stall warning vane—freedom of movement. Prior to inspection, turn master switch "ON" so that stall warning signal can be checked when vane is deflected.

8. Landing gear:

   Wheels and brakes—condition and security, indications of fluid leakage at fittings, fluid lines, and adjacent area.

   Tires—cuts, bruises, excessive wear, and proper inflation.

   Oleos and shock struts—cleanliness and proper inflation.

   Shock cords—general condition.

   Wheel Fairings—general condition and security. On streamlined wheel fairings, look inside for accumulation of mud, ice, etc.

   Limit and position switches—security, cleanliness, and condition.

   Ground safety locks—"REMOVE."

Fuel quantity in tank:

Fuel tank filler cap and fairing covers—secure.

Fuel tank vents—obstructions.

When fuel tank is equipped with a quick or snap-type drain valve, drain a sufficient amount of fuel into a container to check for the presence of water and sediment.

10. Engine:

Engine oil quantity—secure filler cap.

General condition and evidence of fuel and oil leaks.

Cowling, access doors, and cowl flaps—condition and security.

Air inlet screen—cleanliness and security.

Drain a sufficient quantity of fuel from the main fuel sump drain to determine that there is no water or sediment remaining in the system.

11. Nose landing gear:

Wheel and tire—cuts, bruises, excessive wear, and proper inflation.

Oleo and shock strut—proper inflation and cleanliness.

Wheel well and fairing—general condition and security.

Limit and position switches—cleanliness, condition, and security.

Ground safety lock—"REMOVE."

12. Propeller:

Propeller and spinner—security, oil leakage, and condition.

Be particularly observant for nicks and scratches. If the engine runup will be accomplished at this location, ensure that ground area under propeller is free of loose stones, cinders, etc.

13. Fuel tank:

Same as item 9.

14. Landing gear:

Same as item 8.

15. Pitot:

Pitot cover—"REMOVE."

Pitot and static ports—free of obstructions.

General condition and alignment.

Deicer boots and landing edge of wing.

16. Same as item 6 (Wing tip and navigation light—condition and security).

17. Same as item 5 (Wing).

18. Cockpit:

Interior of cockpit door/passenger doors—check for security of hinges and latch or lock. Check for condition of door linings.

Cleanliness and loose articles.

Windshield and windows—obvious defects and cleanliness.

Safety belt and shoulder harness—condition and security.

Check security and adjustment of pilot's seat.

Pilot's seat—locked.

Adjust rudder pedals to ensure full rudder travel.

Check all flight control surface and trim tabs for full travel, right or left, up or down.

Trim tabs—"SET."

Parking brake—"SET."

Landing gear and flap switches or levers in proper position.

Check all switches and controls.
Cabin atmosphere control system.
Oxygen system.
Communication system.
Emergency locator beacon.

With a fireguard available, start the engine/engines and proceed with engine run-up following the engine manufacturer's recommendations.

Section 11. AFTER STORAGE

After storage, an aircraft should have a thorough inspection. It is especially recommended for aircraft that have been tied down outside, or stored for an extended period of time. Aircraft are frequently used for nesting by insects, birds, and animals. Bird nests in air intake scoops will impair airflow, result in excessively rich mixtures, and may even cause engine stoppage. Nests lodged between engine cylinders and engine baffles can cause overheating, preignition, detonation, and fires.

Bird nests may also be found inside wings, control surfaces, and fuselage, if there is an entrance available. Wheel wells of retractable landing gear aircraft are a favorite nesting area.

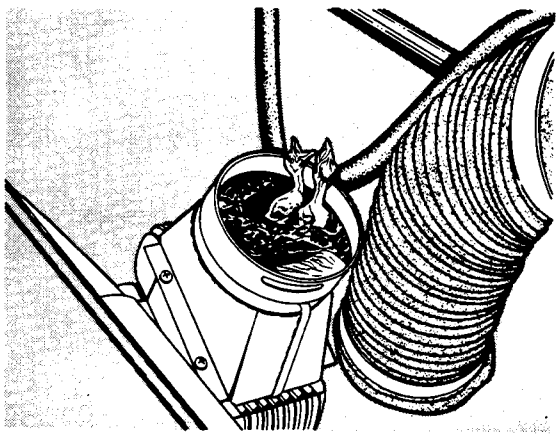

FIGURE 11-1. Birds nest.

Insect nests can obstruct fuel tank vents and cause lean mixtures and fuel starvation. Mice will cut rib stitching and make the wings unsafe. Excretions from rodents are highly corrosive to aluminum alloy metals and are harmful to fabric and wood. Deterioration or excessive weather-checking of fuel, oil, hydraulic, or induction hoses may result in leaks and faulty operation. In view of these facts, it is mandatory that the following be checked:

Oil coolers and intake scoops.
Carburetors, intake screens, and passages.
Fuel tank vents.
Pitot tubes.
Fuselage interior and baggage areas.
Interior of wings and control surfaces.
Static vents.
Exposed drain tubes.
Open wheel wells.
Engine cylinders and baffles.
Fluid lines and hoses.

Winter Operation

When fuel caps are flush with the wing upper surface, they may collect water in the filler overflow well. This water may freeze during cold weather operations, resulting in blockage of the fuel tank vent and engine operation. Partial obstruction of the vent may cause erratic engine operation and loss of power. In aircraft using engine-driven fuel pumps, the tank may collapse causing structural damage.

Check carburetor air scoop for obstructions and open the drain if so equipped. Reclose. Check carburetor air filter screens for obstructions to airflow from ice and snow accumulation.

Drain fuel tank sumps regularly. Water can form in the fuel tank and this can result in restricted fuel flow, cracked lines, and cracked fuel strainer bowls.

Blowing snow may seep into the fuselage, wings, and control surfaces, where it will melt and may accumulate in a low point and freeze. The weight of this ice may be great enough to seriously affect safe flight. Make sure that all frost, snow, and ice are removed from the aircraft, especially from the top of wings and other airfoil surfaces.

Check for proper operation of oil cooler shutters or use of covers as specified by the aircraft manufacturer. Determine that the oil used is recommended by the engine manufacturer.

APPENDIX A

GENERAL SAFETY PRECAUTIONS

Good housekeeping in hangars, shops, and on the flight line is essential to safety and efficient maintenance. The highest standards of orderly work arrangements and cleanliness should be observed while maintaining an aircraft. When the maintenance inspection task is complete, remove and properly store maintenance stands, hoses, electrical cords, hoists, crates, boxes and anything else used to perform the work.

Pedestrian lanes or fire lanes should be marked and utilized as a safety measure to prevent accidents and keep pedestrian traffic out of work areas.

Power cords and air hoses should be straightened, coiled, and properly stored when not in use.

To prevent aircraft damage or personal injury, the use of wheel or wing jacks on uneven or soft ground, or under windy conditions, should be avoided. Jack or raise the aircraft only in a closed hangar having a firm level floor.

Application of aircraft finishes (dope or lacquer) should be accomplished in a controlled environment (paint room) whenever possible. Never do this type work in the presence of lights that are not explosion proof or an open flame. Do not permit other work on an aircraft when it is being painted. Keep fire lanes clear and fire extinguishers available. Locate aircraft not being painted so as to permit quick removal from the shop or hangar.

Oil, grease, or any slippery substances spilled on hangar or shop floors should be immediately removed. If spills cannot be removed, they should be covered with an absorbent material to prevent fire or personal injury. Drip pans should be placed beneath engines and engine parts whenever dripping exists.

To prevent possible personal injury, appropriate safety devices should be used in mounting or removing aircraft tires. When inflating tires on the wheels, tire gauges should always be used. Extreme caution and the use of pressure regulators is required to avoid overinflation of high-pressure tires. Never use high pressure air bottles to inflate tires.

Welding on aircraft in the hangar should never be permitted except in carefully controlled areas. When welding is required, get a professional to perform the work in conformance with the manufacturer's approved procedure.

Servicing Aircraft Oxygen Systems

Oxygen is a chemically stable, nonflammable gas, however, combustible materials ignite more rapidly, and burn with greater intensity in an oxygen-rich atmosphere. When oxygen combines with oil, grease, or any other petroleum product, it forms a highly explosive mixture. Petroleum products are extremely sensitive to impact and spontaneous combustion when exposed to oxygen.

Before servicing any aircraft, consult the specific aircraft maintenance manual to determine the proper type of servicing equipment to be used. Aircraft should not be serviced with oxygen during fueling or other maintenance work. Oxygen servicing of aircraft should be done outside of hangars and by qualified personnel.

Aircraft Tiedown

Aircraft not in use and parked outside should be tied down at all times. Prevailing wind and weather conditions will influence the amount of security needed in tying down air-

craft. Under normal conditions minimum security is sufficient, but whenever winds or storms are forecast, additional tiedowns should be added.

Aircraft should be headed, as nearly as possible, into the prevailing wind, depending on the locations of the parking area's fixed tiedown points. After the aircraft is properly located, center the nose wheel or the tailwheel in the fore-and-aft position. Aircraft which are not equipped with tiedown fittings should be secured in accordance with the manufacturer's instructions.

Tiedown Anchors

All parking should provide at least three-point tiedown (three anchors). Heavy aircraft may require five or more. Anchors installed in paved parking areas are adaptable to any size aircraft. When parking aircraft, spacing should provide for wing tip clearance.

Control Locks

Control locks (blocks) or gust locks should be installed anytime an aircraft is not in use.

General Precaution

The security and prevention of damage to aircraft not in use depends upon the owner, pilot, or aircraft operator taking necessary precautions. The availability of weather condition reports should provide ample time to take additional safety precautions regarding severe weather.

APPENDIX B

AVIATION FUEL—IDENTIFICATION AND FUELING PROCEDURES

Gasoline

The tetraethyl lead content of aviation fuel determines the grade rating.

Grade/Octane Rating	*Color*	*Maximum Tetraethyl Lead Per Gallon*
80	Red	0.5 ml. gal.
100LL (Low Lead)	Blue	2.0 ml. gal.
100HL (Hi Lead)	Green	3.0 ml. gal.

The higher grade ratings are for use in high compression engines.

Always use the grade of fuel recommended by engine manufacturer (regular or alternate). The availability of different fuel grades at servicing facilities is largely dependent on the classes of aircraft using the facility. Most fuel service units plainly indicate the type and grade of fuel. Another check for proper grade fuel is to compare the fuel color with the colored band on the service hose. A band 12″ in width indicating fuel grade must be painted on the fuel hose adjacent to the fitting used to dispense the fuel. Fuel grade is painted within this color band.

Jet Fuel

There are three types of jet fuel in common use today:

1. Kerosene grade turbine fuel, now designated as Jet A;
2. A blend of gasoline and kerosene designated as Jet B;
3. A third type, called Jet A–1, for operation at extremely low temperatures.

Most commercial turbine engines will operate on either Jet A or Jet B fuel. However, the difference in the specific gravity of the fuels may require fuel control adjustments; check the FAA-Approved Airplane or Rotorcraft Flight Manual or engine information for instructions.

Fueling Aircraft

Do not fuel or defuel an aircraft in a hangar or other enclosed space. The aircraft should be free from fire hazards, and have the engine switches off. Chocks should be placed under the wheels prior to fueling or defueling. Fire extinguishing equipment should be available on the fuel service vehicle or at the fuel hydrant.

Pressure fueling is used on many late-model aircraft. This is sometimes referred to as "single-point" or "underwing" fueling. It greatly reduces the time required to service large aircraft. Pressure fueling also reduces the chance of static electricity igniting fuel vapors. The design of pressure fueling systems varies with each type of aircraft. Consult the manufacturer's instructions for detailed procedures on how each system functions.

All fuel is filtered through water-separating equipment installed in the system between the supply tank and the service truck. In the case of island-type refueling stations, it is filtered as it leaves the supply pumps. These filters and separators are usually checked each day for evidence of dirt and water. This is also done each time a mobile refueler is reloaded.

Fuel which has been stored in cans or barrels should be run through a strainer-funnel before being put into an aircraft. This practice is necessary because condensation and rust develop inside cans and barrels. An increase in the hazard of static electricity results when the gasoline passes through filters. The filter

should be grounded and remain grounded until all gasoline has drained through it. Never use a plastic funnel, bucket, or similar nonconductive container when servicing from storage cans or barrels.

When fueling aircraft by truck, the aircraft should be located on the apron or a dispersal site. The tank truck should be as far from the aircraft as the hose will permit, preferably to the windward or upwind side. Identify the aviation fuel and lubricating oil dispensed from each fueling unit before beginning the actual servicing. The fueling technicians should be familiar with the various grades of gasoline so that only the appropriate fuel will be used.

There should be no lights other than approved explosion-proof lights permitted within 100 feet of the fueling operation. Exposed electric switches, sliprings or commutators, dynamos or motors, and spark-producing electrical equipment, should not be operated within 100 feet of fueling operations.

All nonessential circuit switches should be "OFF." Assure that both the aircraft and the truck are properly grounded to prevent static electricity sparks. To accomplish this, a separate ground wire should be connected from aircraft to ground, from fuel truck to ground, and the hose nozzle grounded to the aircraft.

If aircraft fuel or other combustible liquid is spilled, it should be immediately removed by washing with water. It may also be covered with a foam blanket or neutralized by other means. Tools of nonsparking metal should be used when working on any part of a system or unit which is designed for storing or handling gasolines. Notify the proper fire authorities if the situation so dictates.

Oil

Aircraft oil tanks are normally checked at the same time the fuel tanks are filled. There are a few exceptions to this general rule. Some manufacturers recommend that the oil level in certain jet engines be checked within a specified time after engine shutdown. In all cases, the manufacturer's instructions should be followed not only for servicing procedures but also for type and grade of oil used.

APPENDIX C

CERTIFICATE OF REGISTRATION—AIRCRAFT ELIGIBILITY AND APPLICATION

The purchaser of an aircraft must apply for a Certificate of Aircraft Registration before he flies it. The Aircraft Registration Application, AC Form 8050–1, consists of an original, two duplicate copies, and instructions for its preparation and submission.

An application for a registration certificate must be accompanied by an aircraft bill of sale or other evidence of ownership. A bill of sale which meets the recording requirements of the Federal Aviation Administration is AC Form 8050–2, Aircraft Bill of Sale.

The temporary copy of the application must be placed in the aircraft until the permanent certificate of registration is received from the Federal Aviation Administration.

Make sure the certificate of aircraft registration has not expired. If one of the following exists, it is no longer valid:

1. The aircraft is registered under the laws of a foreign country;
2. The registration of the aircraft is canceled at the written request of the owner;
3. The aircraft is totally destroyed or scrapped; (If the aircraft is destroyed, the owner should notify the FAA by filing in the back of his Certificate of Aircraft Registration, AC Form 8050–3, and mailing it to the FAA Aircraft Registry, P.O. Box 25082, Oklahoma City, Oklahoma 73125.)
4. The ownership of the aircraft is transferred;
5. The holder of the certificate loses his United States citizenship; and
6. Thirty days have elapsed since the death of the holder of the certificate.

APPENDIX D

CERTIFICATE OF AIRWORTHINESS—GENERAL INFORMATION

An Airworthiness Certificate is issued by a representative of the Federal Aviation Administration after the inspection has been completed, and the aircraft is found to meet the requirements of the Federal Aviation Regulations (FARs), and is in a condition for safe operation. The certificate must be displayed in the aircraft so that it is legible to passengers or crew whenever the aircraft is operated. The Airworthiness Certificate is transferred with the aircraft when it is sold.

The Standard Airworthiness Certificate, FAA Form 8100–2, is issued for aircraft type certificated in the: (1) normal; (2) utility; (3) acrobatic; (4) glider; (5) manned free balloon; and (6) transport categories.

The Special Airworthiness Certificate, FAA Form 8130–7, is issued for all aircraft certificated in other than the standard classifications, such as experimental, restricted, limited, and provisional. If an aircraft is classed as other than standard, contact your local FAA General Aviation District Office for an explanation of the pertinent airworthiness requirements and the limitations of such a certificate.

In summary, the FAA initially determines that an aircraft is in safe operating condition, conforms to a type design, and then issues an airworthiness certificate. A Standard Airworthiness Certificate remains in effect so long as the aircraft receives the required maintenance and is properly registered in the United States. Flight safety depends, in part, on the condition of the aircraft, which may be determined on inspection by certificated mechanics, approved repair stations, or manufacturers who meet specific requirements of FAR Part 43.