AC NO: 20-59
DATE: 2/19/68

ADVISORY CIRCULAR

MAINTENANCE INSPECTION NOTES FOR CONVAIR MODELS 240 AND 600/240D; MODELS 340/440 AND 640/340D/440D SERIES AIRCRAFT

Consolidated reprint, February 1974;
includes change 1.

DEPARTMENT OF TRANSPORTATION
FEDERAL AVIATION ADMINISTRATION

Initiated by: AFS-300

AC NO: 20-59

DATE: 2/19/68

ADVISORY CIRCULAR

DEPARTMENT OF TRANSPORTATION
FEDERAL AVIATION ADMINISTRATION

* **SUBJECT:** MAINTENANCE INSPECTION NOTES FOR CONVAIR MODELS 240 AND 600/240D; MODELS 340/440 AND 640/340D/440D SERIES AIRCRAFT *

1. PURPOSE. This handbook describes maintenance inspection notes which can be used for the maintenance support of certain structural parts of Convair 240 and 600/240D; Models 340/440 and 640/340D/440D series aircraft.

2. DESCRIPTION. Maintenance on the wing, fuselage, and empennage structure is reviewed with a view toward supplementing information currently available.

3. HOW TO GET THIS PUBLICATION.

   a. Order additional copies of this publication from:

      Department of Transportation
      Federal Aviation Administration
      Distribution Unit, TAD-484.3
      Washington, D.C. 20590

   b. Identify this publication as: Advisory Circular 20-59 - Maintenance Inspection Notes for Convair 240, 600/240D, 340/440, and 630/340D/440D Series Aircraft.

C. R. Melugin Jr.

C. R. MELUGIN, JR.
Acting Director, Flight Standards Service

Initiated by: AFS-300

TABLE OF CONTENTS

			Page No.
1.	Introduction		1
2.	Description		1
3.	Background		1
4.	General Information		1
5.	Type of Construction		2
6.	General Inspection Tips		2
7.	Nondestructive Testing (NDT)		3
APPENDIX 1	STATION CHARTS	(2 pages)	
Figure A-1	Wing Stations		1
Figure A-2	Fuselage Stations		2
APPENDIX 2	FUSELAGE COMPONENTS	(5 pages)	
Figure B-1	Fuselage Major Components		1
Figure B-2	Fuselage Nose Section		2
Figure B-3	Fuselage Cabin Section		3
Figure B-4	Fuselage Tail Section		4
Figure B-5	Fuselage Stringer Diagram		5
APPENDIX 3	WING COMPONENTS	(5 pages)	
Figure C-1	Wing Components		1
Figure C-2	Wing Leading Edge Structure		2
Figure C-3	Wing Inter-Spar Structure		3
Figure C-4	Wing Tailing Edge Structure		4
Figure C-5	Wing Tip Structure		5
*APPENDIX 4	MAINTENANCE INFORMATION*	(9 pages)	1
* APPENDIX 5	MODEL 240 AND 600/240D (STC # SA 1054 WE) SERIES AIRCRAFT	(5 pages)	1
APPENDIX 6	MODEL 340/440 AND 640/340D/440D (STC # AS 1096 WE) SERIES AIRCRAFT	(6 pages)	1

*

1. INTRODUCTION. This advisory circular provides maintenance information which can be used by mechanics, repair agencies, owners, and operators in developing maintenance programs, making improvements in existing programs, and conducting inspections and repairs on certain structural parts of Convair 240, 340/440, 240T, and 340T airplanes. The material is based, in part, upon information made available through discussions with personnel who have maintained these types of airplanes for thousands of hours of time in service. The intent of the circular is to impart some of this knowledge to other interested persons so that it is not lost.

2. DESCRIPTION. The circular contains guidance material for performing maintenance on wing, fuselage, and empennage structure. The information has been derived from service experience. It does not comprise a full and complete maintenance program for the subject aircraft but should be considered as supplemental maintenance data. Included in the circular are diagramatic sketches and station identifications of the wing and fuselage. In addition, there is a listing of selected maintenance difficulties which have been reported since 1964.

3. BACKGROUND.

   a. Aircraft Use. The agency has realized that several different types of transport aircraft are being phased out of service by some airlines because of the availability of newer equipment. Such older aircraft are being purchased by other operators who may not be familiar with the scope of required maintenance and the means which have been used to keep the aircraft in a safe condition.

   b. Maintenance "Know How." Since maintenance "know how" is not transferred with the aircraft, the new operator generally goes through a learning cycle before he is able to rapidly pinpoint the important/critical problem areas of the aircraft. In this respect, identification of known areas where structural problems have been experienced will help in the preparation of an initial maintenance program by a new operator. It also can serve as a guide to other operators who have not accumulated sufficient service experience to have knowledge of all the problem areas of the aircraft.

4. GENERAL INFORMATION.

   a. Manufacturer's Bulletins. It must be emphasized that the manufacturer has published several service bulletins concerning the inspection, repair, and modification of Convair 240, 340/400, 240T, and 340T aircraft. Service bulletins highlight the importance of maintaining structural integrity on aircraft with particular reference to areas known to have experienced crack and corrosion damage. Operators are urged to become conversant with the manufacturer's recommendations and make certain that responsible maintenance personnel are knowledgeable on this subject.

b. Airworthiness Directive. It is emphasized that the material in this circular does not supersede any of the requirements of airworthiness directives issued under Part 39 of the Federal Aviation Regulations.

5. TYPE OF CONSTRUCTION. The major structural components of the aircraft are the wing group, the fuselage group, and tail group.

a. The full cantilever wing group consists of a center section integral with the fuselage and two removable outer panels. The outer panels include detachable tip sections and ailerons. The two-engine nacelles are bolted and riveted to the wing center section and include support beams on the outboard sides for installation of the main landing gear.

b. The all metal semi-monocoque fuselage consists of three sections: nose section, cabin section, and tail cone section. Construction of the fuselage consists of longerons, longitudinal stringers, transverse bulkheads, formers, and support beams. The dorsal fin of beam and rib construction is riveted to the upper aft exterior surface of the fuselage along the center line.

c. The tail group is composed of the horizontal stabilizers with hinged elevators and vertical stabilizer with hinged rudder. The vertical and horizontal stabilizers are of full cantilever design and conventional spar and rib construction.

6. GENERAL INSPECTION TIPS.

a. Visual Inspection. The primary structure of the aircraft is designed to provide resistance to variable forces imposed while in operation by dispensing the forces through a structural pattern of "force flow" to the primary structural members of the wing and fuselage. External indications of failure, such as distorted skin, tilted or sheared rivets, and torn, dented, cracked, or corroded skin are usually obvious. Wrinkled skin, "oil cans," and tilted rivets, adjacent to the obviously failed area often indicate secondary damage caused by transmission of stress from the failed area. Misalignment of doors and panels may indicate distortion of internal structure. Internal structural damage, although not always apparent, may be found by closely examining the exterior surface. For example:

(1) Buckled skin between rivets at the end of a stiffener or stringer could mean that the last attaching rivet has failed, or that the stiffener or stringer is buckled in the area of the skin buckle. When a detailed inspection of the failed area is to be performed, functional parts should be actuated to determine if the failure has caused binding.

(2) Deep diagonal skin buckles, located over a frame, former, or rib could mean the member is distorted. When doubt exists concerning internal condition, the area in question should be opened and carefully inspected.

7. NONDESTRUCTIVE TESTING (NDT).

Simply stated, nondestructive testing is preventive maintenance. This includes utilization of such maintenance tools as X-ray, ultrasonic, magnetic particles, eddy current, and dye penetrant.

a. Maintenance Inspection. NDT permits maintenance inspections without removing components from aircraft or tearing down complex assemblies. Defects in various aircraft systems which would escape detection through normal visual inspection will be identified by NDT.

b. Training Required. Special NDT training is necessary to make sure that the operator is capable of operating the equipment and interpreting the results. Also, many states require that an X-ray operator have an approved certificate for use of X-ray in industrial applications. This is to minimize improper use with attendant health hazard of X-ray equipment.

AIRCRAFT STATION DIAGRAMS

The wing, fuselage, and empennage station diagrams included in this document were developed for the CV-340 aircraft and are used as a general reference only. Several models of each of these aircraft were manufactured and have different station locator numbers based on the particular configuration. Since the defect areas generally apply to all models of both aircraft, the referenced area can be compared with a similar area and locator on the appropriate station diagram for the particular model of aircraft.

FIGURE A-1. WING STATIONS

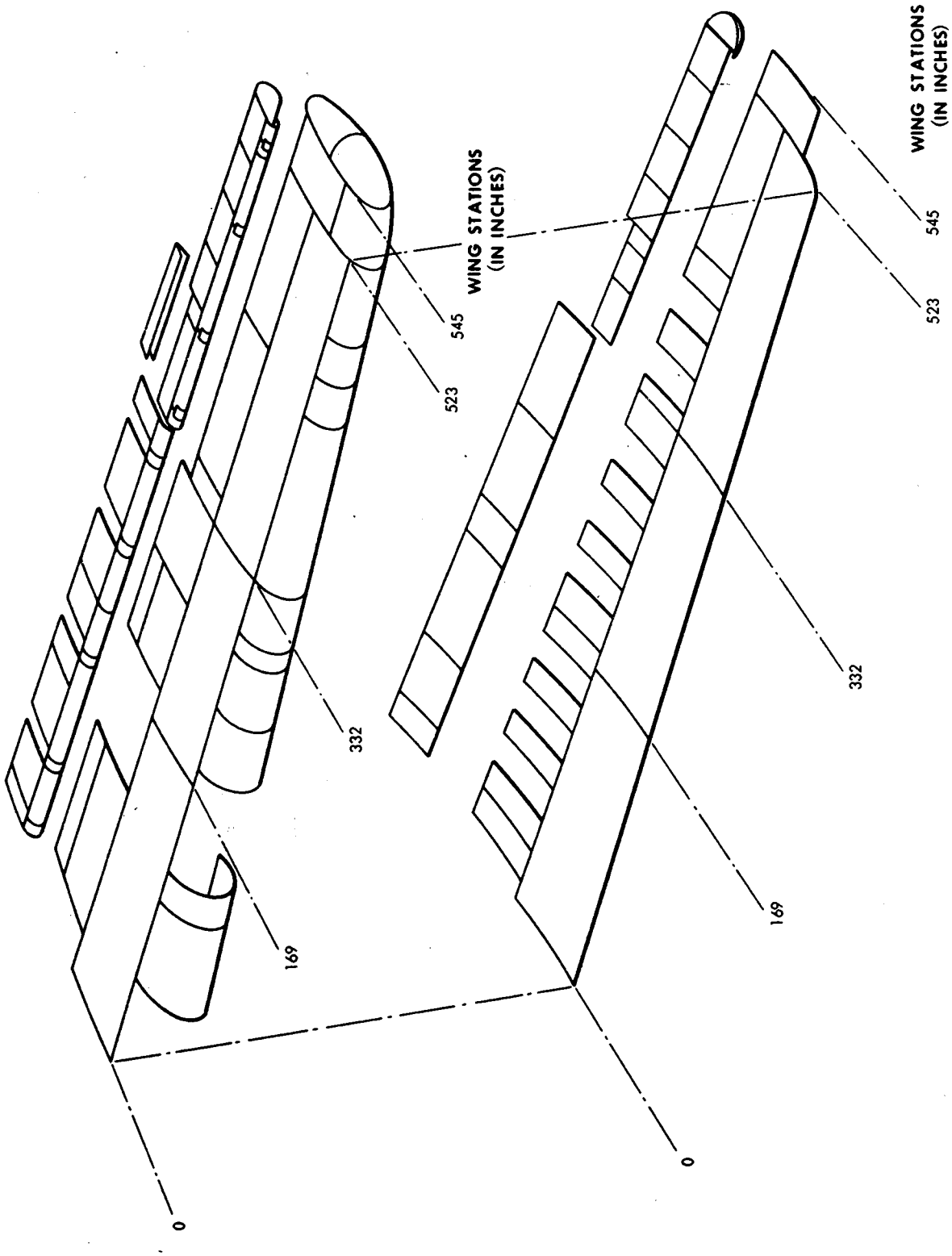

FIGURE A-2. FUSELAGE STATIONS

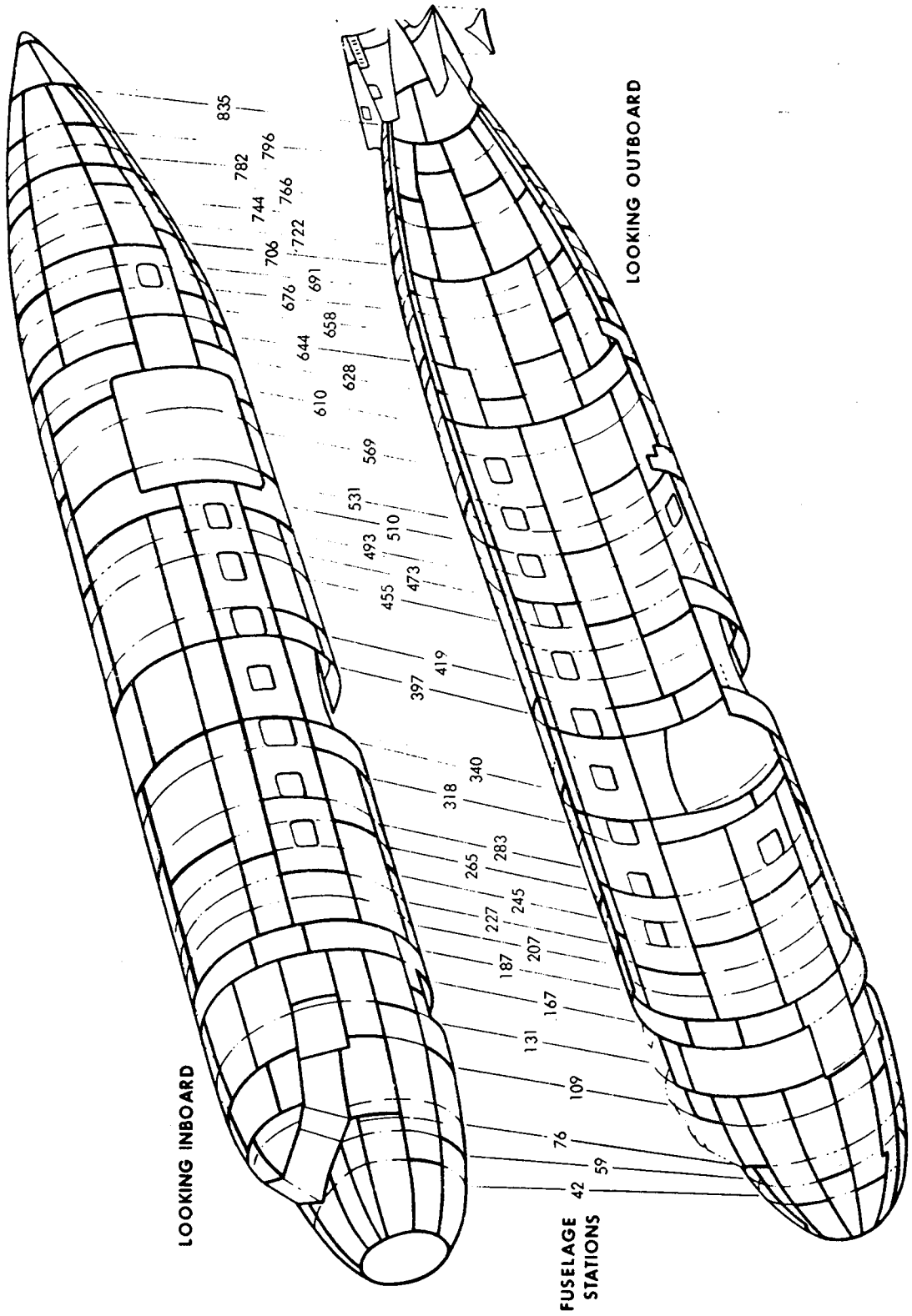

FIGURE B-1. FUSELAGE MAJOR COMPONENTS

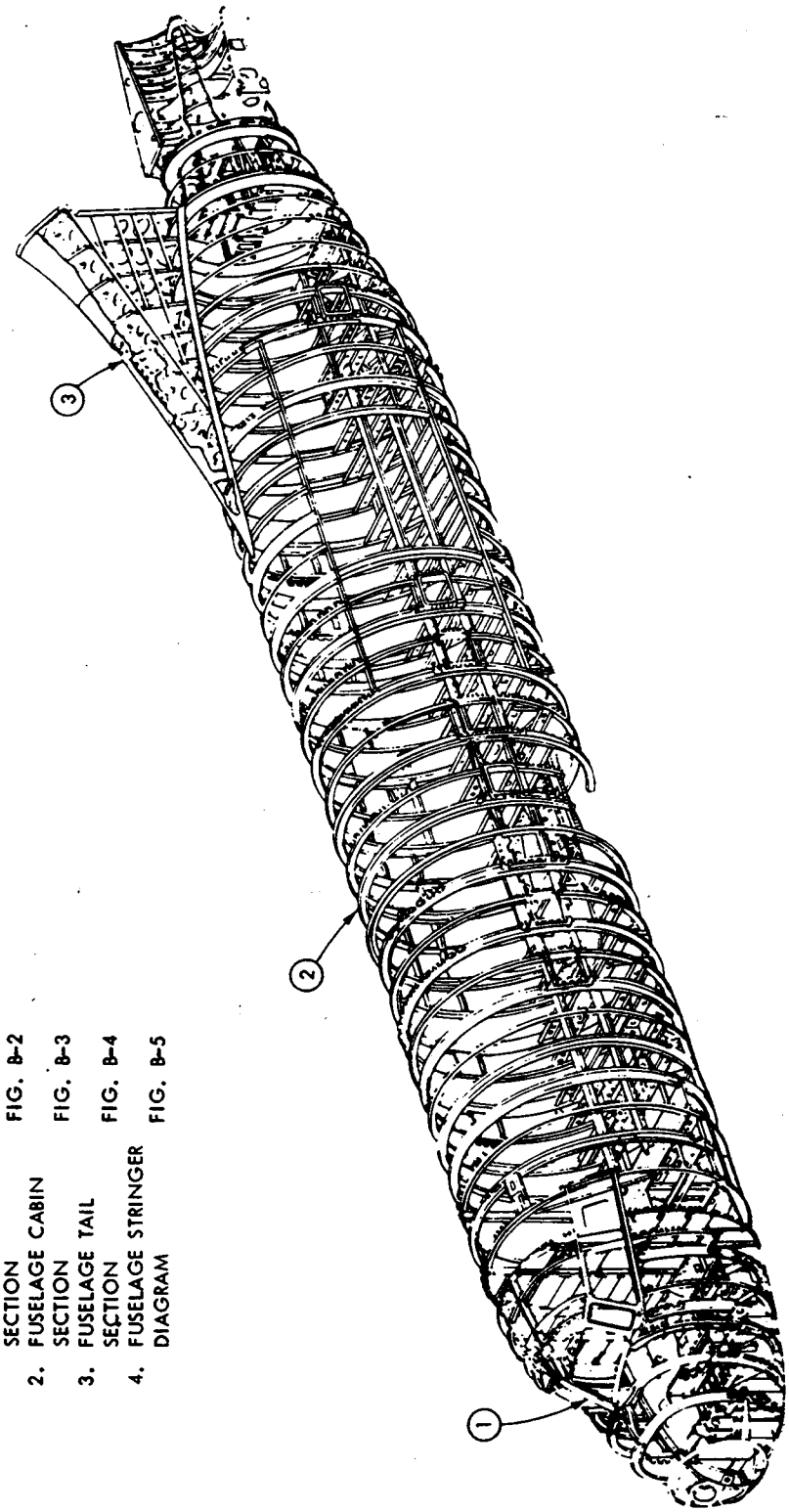

CODE	STRUCTURAL COMPONENT	FIGURE REFERENCE
1.	FUSELAGE NOSE SECTION	FIG. B-2
2.	FUSELAGE CABIN SECTION	FIG. B-3
3.	FUSELAGE TAIL SECTION	FIG. B-4
4.	FUSELAGE STRINGER DIAGRAM	FIG. B-5

FIGURE B-2. FUSELAGE NOSE SECTION

CODE	STRUCTURAL COMPONENT
1.	NOSE CAP
2.	NOSE CAP LONGERON
3.	PILOT'S COMPARTMENT ENCLOSURE
4.	NOSE SECTION BULKHEAD 109
5.	NOSE BEAM CAP STRIP

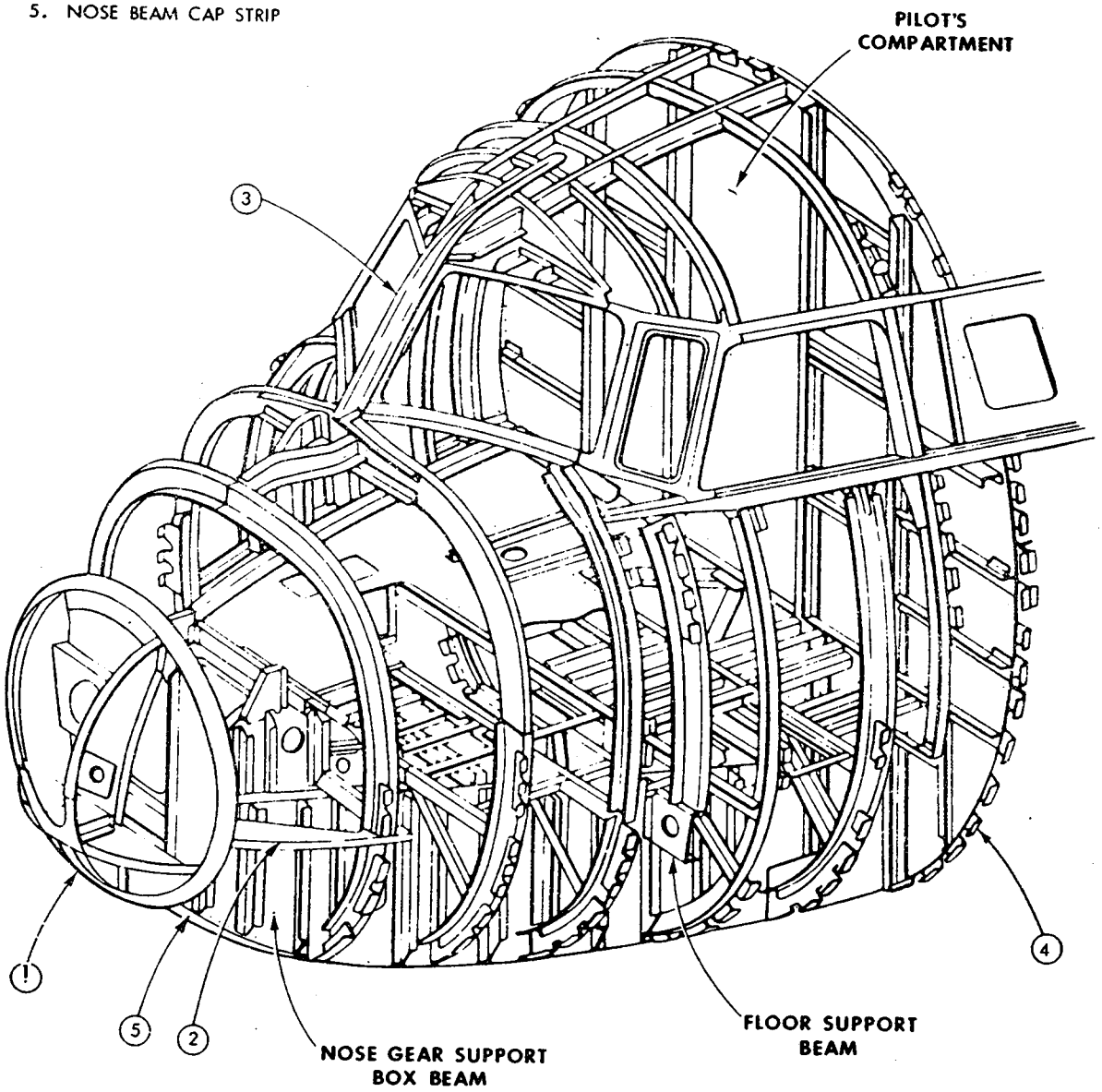

FIGURE B-3. FUSELAGE CABIN SECTION

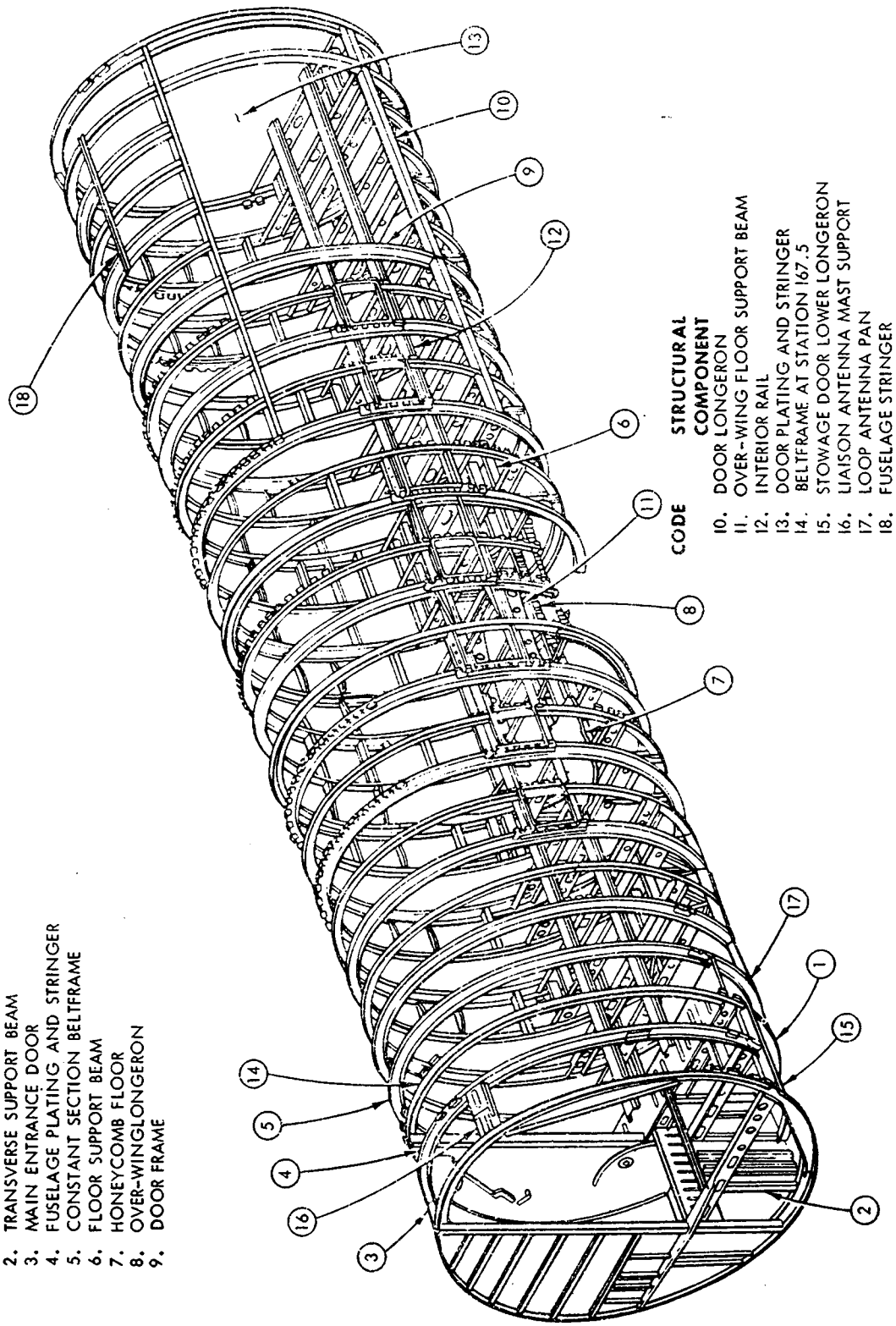

FIGURE B-4. FUSELAGE TAIL SECTION

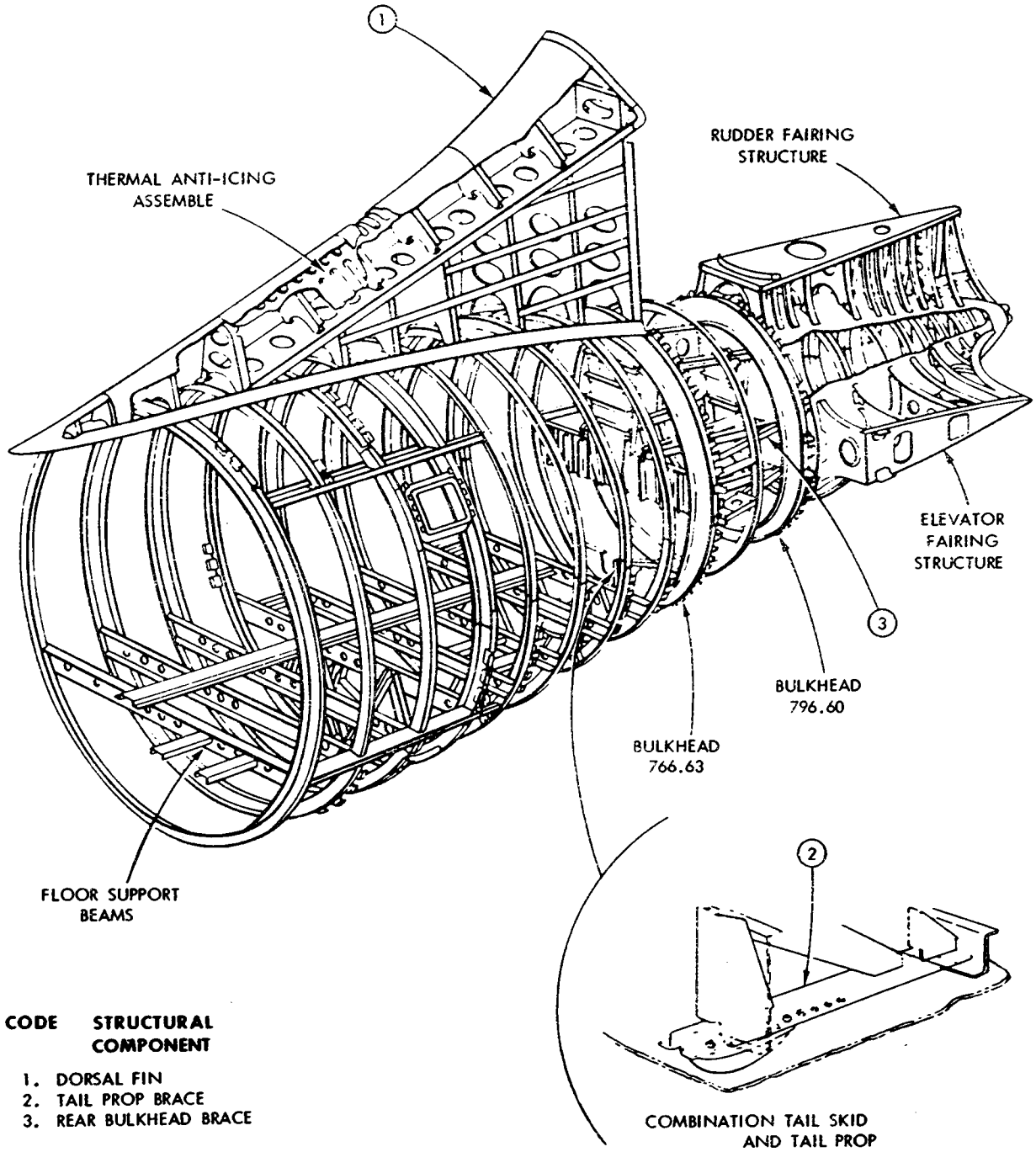

CODE	STRUCTURAL COMPONENT
1.	DORSAL FIN
2.	TAIL PROP BRACE
3.	REAR BULKHEAD BRACE

FIGURE B-5. FUSELAGE STRINGER DIAGRAM

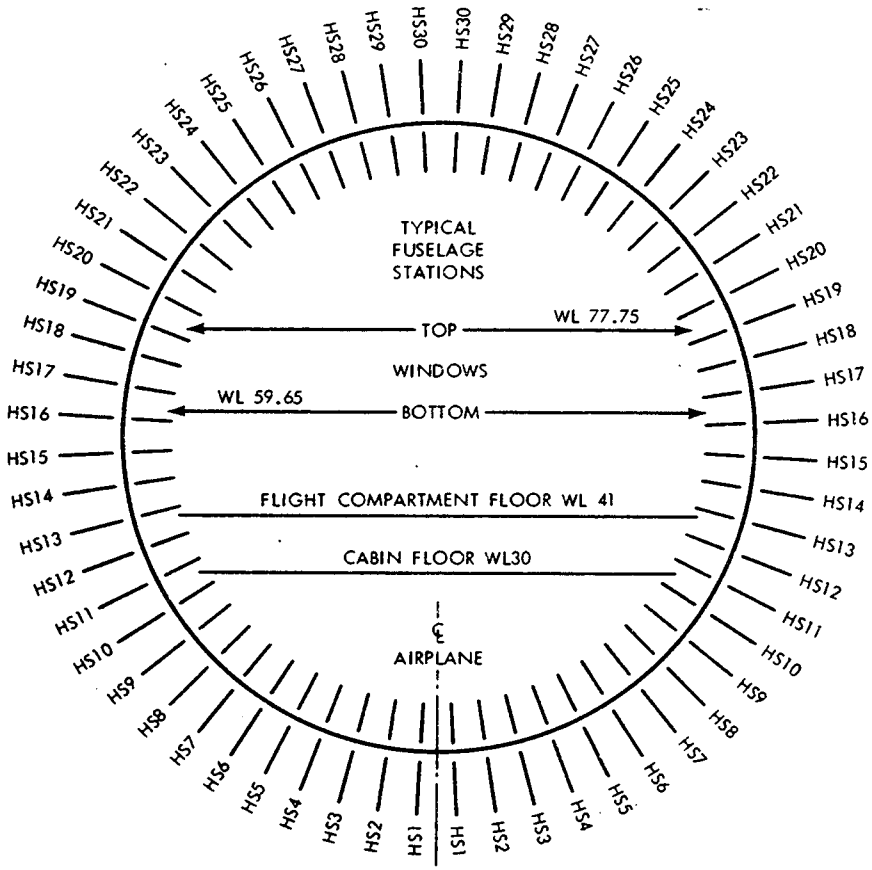

NOTES:

1. HS INDICATES POINT ON LINE OF STRINGER HEEL.
2. ALL STRINGERS ARE MADE FROM STANDARD ROLL-FORMED SECTIONS Y36 OR Y34, OF 24ST ALCLAD MATERIAL.
3. STRINGERS AT POSITIONS 19 L/R CABIN SECTION ARE REVERSED.
4. STRINGERS AT POSITIONS 17 L/R AND 29 L/R TAIL SECTION ARE REVERSED.

FIGURE C-1. WING COMPONENTS

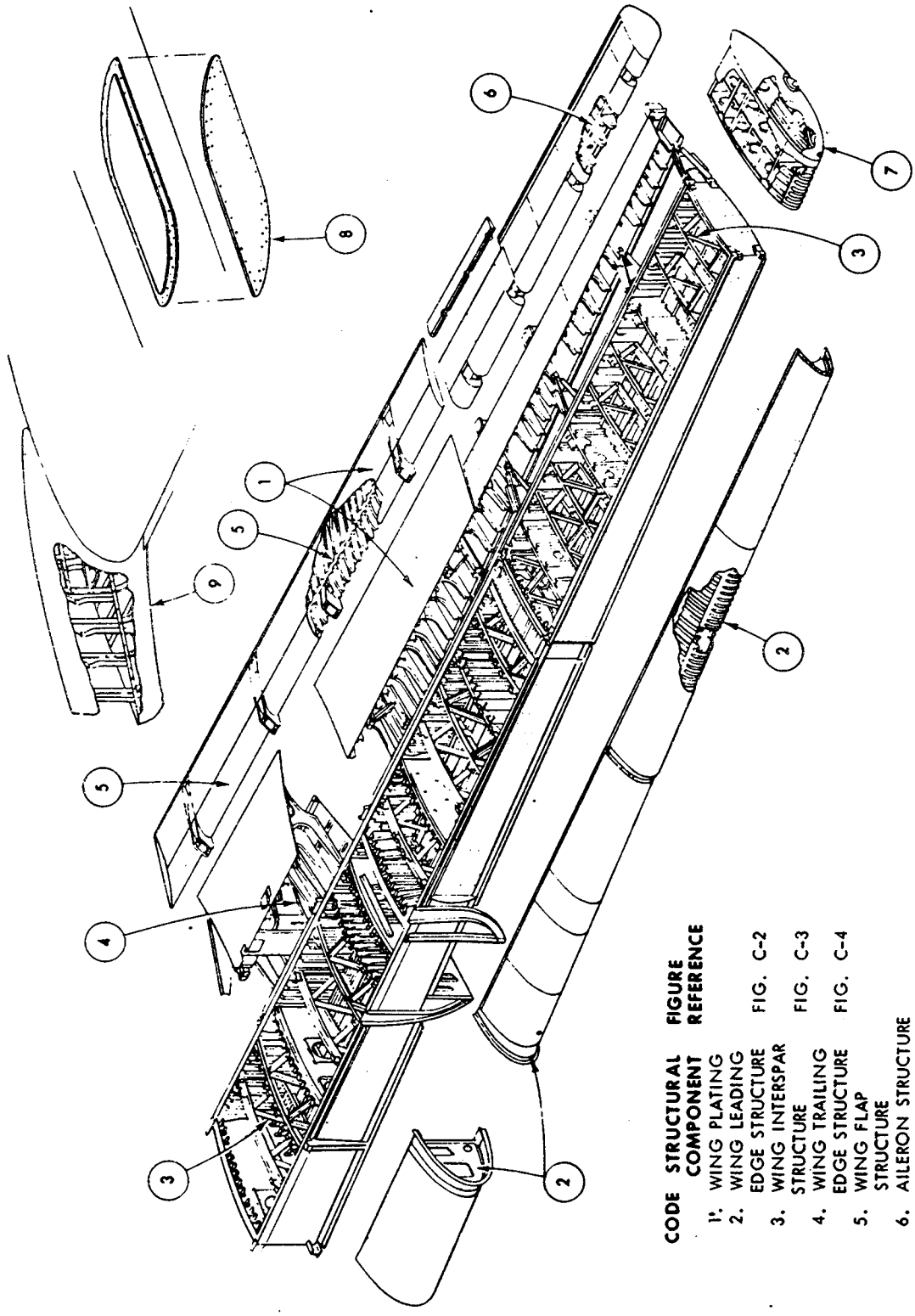

CODE	STRUCTURAL COMPONENT	FIGURE REFERENCE
1.	WING PLATING	
2.	WING LEADING EDGE STRUCTURE	FIG. C-2
3.	WING INTERSPAR STRUCTURE	FIG. C-3
4.	WING TRAILING EDGE STRUCTURE	FIG. C-4
5.	WING FLAP STRUCTURE	
6.	AILERON STRUCTURE	
7.	WING TIP STRUCTURE	FIG. C-5
8.	LOWER SURFACE ACCESS DOORS	
9.	WING FAIRING	

FIGURE C-2. WING LEADING EDGE STRUCTURE

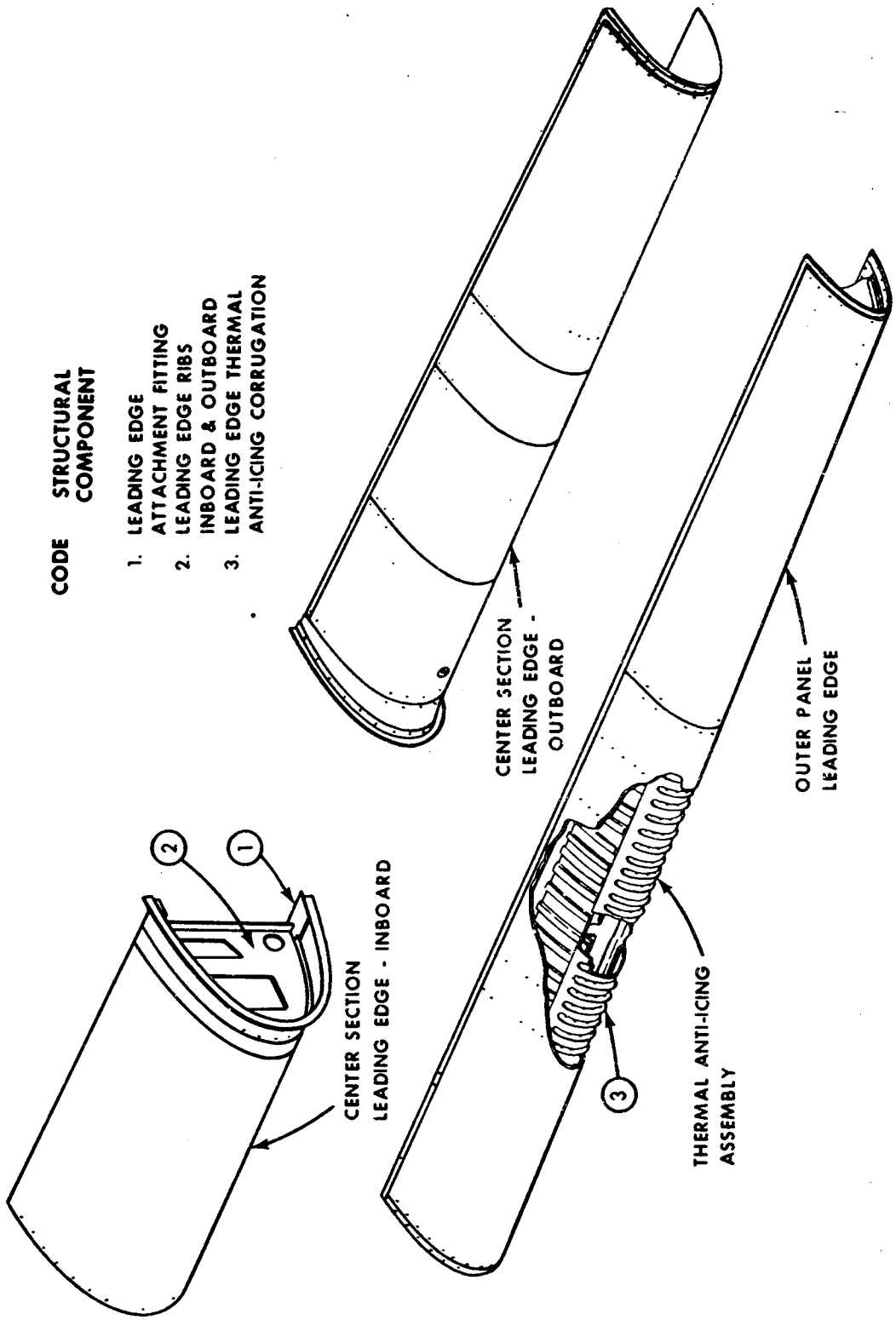

FIGURE C-3. WING INTER-SPAR STRUCTURE

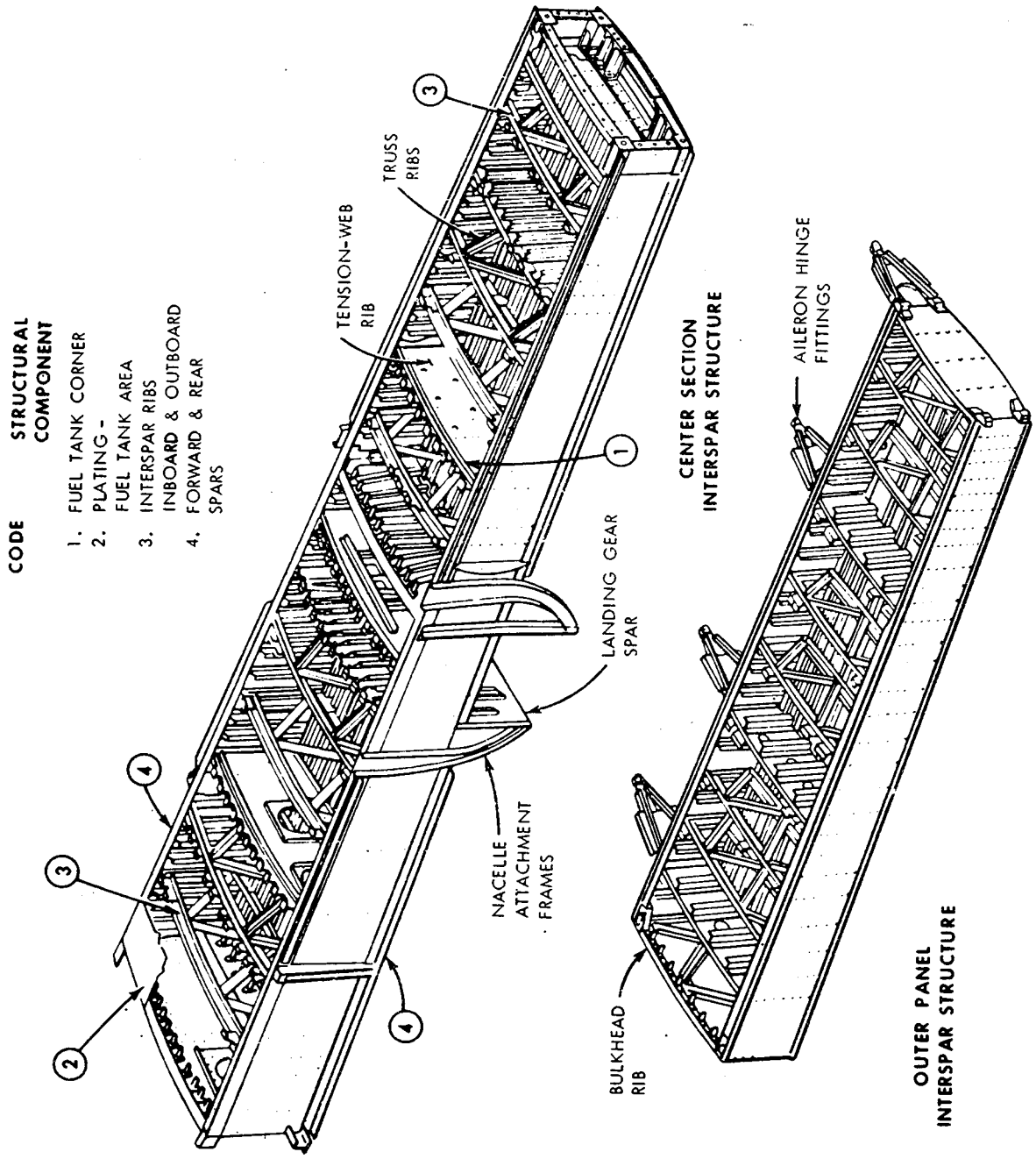

FIGURE C-4. WING TAILING EDGE STRUCTURE

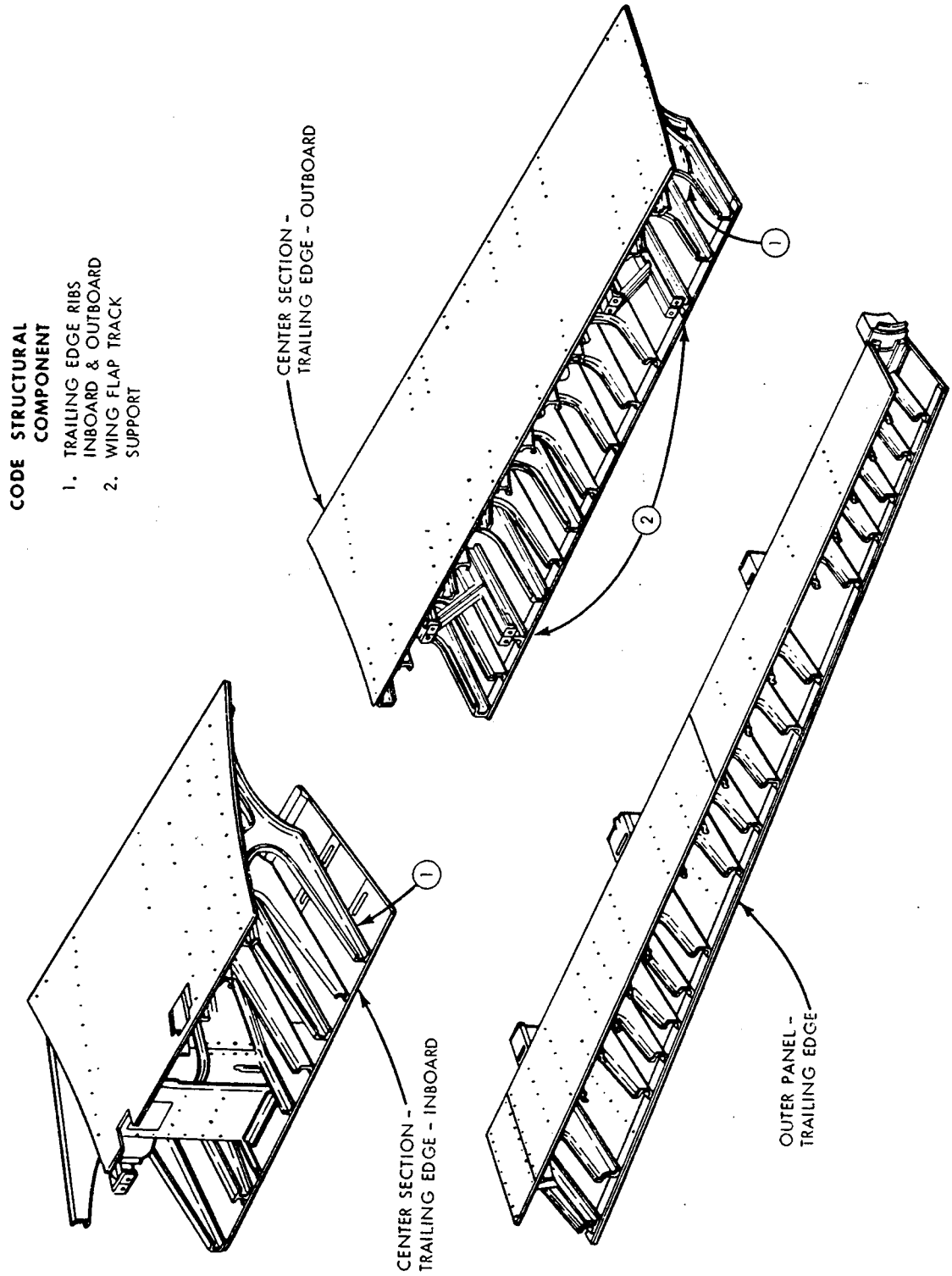

FIGURE C-5. WING TIP STRUCTURE

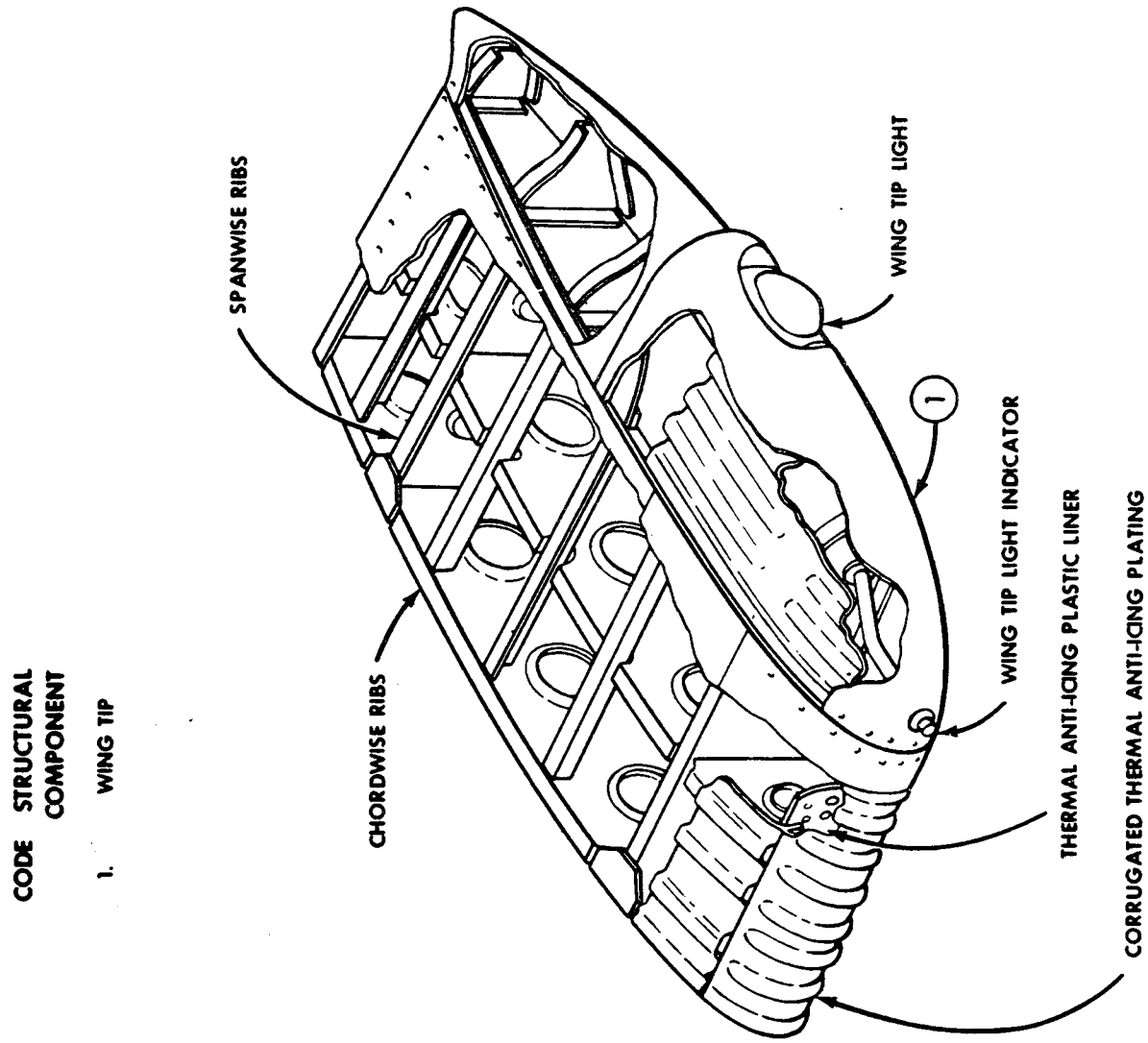

APPENDIX 4
* MAINTENANCE INFORMATION *

1. CV-240 AIRCRAFT MAINTENANCE INFORMATION. The following is a listing of significant maintenance difficulties that have been reported by air carriers as mechanical reliability reports from 1964 to 1967. This information may be useful in identifying additional structural inspection areas:

   a. Fuselage.

      (1) During preflight inspection, a crack which was approximately 3 inches long was found on the nose wheel well beam angle left side, P/N 240-3110100-145. The repair was accomplished in accordance with the manufacturer's structural repair manual. The total time since overhaul was 3,476 hours.

      (2) During a periodic inspection, a crack was found in the left horizontal stabilizer lower forward attach fitting, P/N 240-3510713-8. The repair was made in accordance with the manufacturer's drawing. Aircraft time since overhaul was 3,382 hours. Total time on aircraft was 35,932 hours.

      (3) On line check, the landing gear rail was found cracked beyond limits which were acceptable to the manufacturer. Repairs were made in accordance with approved data.

   b. Wing.

      (1) Pilot reported that aircraft tried to roll to left during approach and landing. Investigation revealed that the left outboard flap track was cracked. The left outboard flap track and upper skin panel were replaced. Total aircraft time was 36,980 hours.

      (2) The left flap skin was found cracked, during periodic check, near second track from outboard side. Total aircraft time since overhaul 3,215 hours.

      (3) During a turnaround inspection, the inboard stress plate doubler between station 188 and 210 on right wing was found cracked. The stress doubler plate was replaced.

      (4) A crack approximately 1 inch in length was found in the left wing stringers Nos. 3 and 4 at wing station 10½ across the top of the Z angle. The right wing stringers Nos. 3 and 4 had a crack approximately 1 inch in length at wing station 10½ across the top section. Total time on aircraft was 36,633 hours.

(5) On a preflight check, it was noted that the right wing upper skin above the vicinity of the outboard flap track was raised and the skin behind the rear spar was buckled due to the flap track support at station 14, P/N 240-1610444-25, being cracked. The repair was made in accordance with the manufacturer's structural repair manual. Total aircraft time was 36,860 hours.

(6) During periodic inspection, a crack was found in the left lower skin doubler at the inboard gear fitting station 6. The doubler was replaced. Total aircraft time was 36,943 hours.

(7) During periodic inspection, a crack was found in the left inboard fuel tank stress plate doubler. The stress plate was replaced. Time on aircraft since overhaul was 2,911 hours.

(8) A crack was found in the left aileron outboard hinge bracket angle during a periodic inspection. The bracket angle was replaced.

(9) During overhaul inspection, cracks were found in No. 4 stringer at station 10½ and No. 10 stringer at station 7½. The cracked section was replaced and a doubler added at each stringer. Time since overhaul was 11,404 hours. Total aircraft time is 36,557 hours.

(10) On walkaround inspection, a fuel stain was discovered on the right wing. Investigation revealed a 4-inch crack running fore and aft on the wing lower skin plate at station 9 and stringers Nos. 6 and 7 clips were cracked at station 9. Repairs were made in accordance with the manufacturer's structural repair manual.

(11) During a service check, the left wing flap track support bracket at station 14 was found broken causing buckling of wing skin.

c. Nacelles/Pylons.

(1) During service check, a crack was found in the right engine upper right inboard engine mount longeron fitting. The crack extended from the first rivet hole of the vertical leg to hole of the first rivet on horizontal leg and upward to and through the bulb section of the vertical leg. The total length of crack was 2 inches. Time since periodic check was 150 hours.

(2) Pilot reported having flown in turbulent air. Inspection revealed that left and right nacelle skin pulled loose from center section to nacelle attach angle top inboard side near center of wing. Repairs were accomplished in accordance with manufacturer's structural repair manual.

(3) During overhaul inspection, the left inboard trunnion fitting, P/N 240-1650711-11, inboard ear was found broken off. The left inboard trunnion on left main landing gear attach fitting was replaced. The time since overhaul was 3,587 hours. The possibility of X-raying this area is under investigation.

d. Hydraulic.

(1) Hydraulic fluid was lost after takeoff. Investigation revealed the right main gear retract cylinder, P/N 240-5180307-112, leaking in the leveling gear up position.

(2) After takeoff, all hydraulic fluid was lost and a no flap landing was made. Investigation revealed a hydraulic line broken at No. 2 engine pump. The time since last inspection was 120 hours.

(3) Aircraft while inbound lost hydraulic fluid and landed with emergency pressure. The bypass valve cover plate screws were found stripped. Investigation revealed double cover plate installed causing cover plate screws to penetrate aluminum housing by only three threads. A fleet campaign was conducted to install longer screws which permit adequate thread grip in aluminum. Bypass valve overhaul instructions expanded to indicate removing one of the plates when two are found and to ascertain that proper length screws are installed.

2. CV-340/440 AIRCRAFT MAINTENANCE INFORMATION. The following is a listing of significant maintenance difficulties that have been reported by air carriers as mechanical reliability reports from 1964 to 1967. This information may be useful in identifying additional structural inspection areas:

a. Fuselage.

(1) The cabin pressurization became uncontrollable at an altitude of 12,000 feet. The flight depressurized and descended to a lower altitude. Inspection disclosed that the upper cargo door sill retainer was out in three places which allowed the sill to slack and causing pressure leak. The CV-340 P/N 8210303-9 plastic insert sill retainer was reinstalled in the groove and sill was repositioned. Total time on aircraft since overhaul was 841 hours.

(2) During cruise, the main entrance door came open against the rear hook. The forward hook was not latched. The cabin was depressurized and an off-schedule landing was made. An inspection of the door latch hook and locking mechanism revealed that the forward hook tension spring had been broken which prevented the hook from not completely latching. This did not permit the door

handle to go to the fully locked detent. The spring was replaced and door operated normally.

(3) Visual inspection detected corrosion on lower section of galley door frame at the aft side of the door, left side of fuselage. Cause of corrosion attributed to water and coffee accumulation. Total time on aircraft was 35,259 hours.

(4) After takeoff, door warning light was activated. Investigation revealed microswitch malfunction on belly baggage door. After checking and repositioning the switch, the system operated properly.

(5) During a routine inspection, a 1-inch crack was found at stringer No. 26 where attached to beltframe fuselage station 798. The aircraft was repaired per Convair structural manual. Total aircraft time is 33,779 hours.

(6) Main cabin door warning light came on shortly after takeoff. Inspection revealed microswitch, P/N AN 3216-1, plunger sticking. The plunger was lubricated and operational check was normal.

(7) During scheduled inspections, the fuselage left-hand stringers Nos. 7, 8, and 9 were found cracked at stations 193, 210, and 227. Repairs were accomplished and the area reinforced in accordance with the manufacturer's instructions. Total time on aircraft was 20,381 hours.

b. Wings.

(1) During visual inspection, corrosion was detected on the splice plate at station 8 upper wing skin plate left side. Repairs were made in accordance with the manufacturer's structural manual. Total time on aircraft was 33,670 hours.

(2) During inspection, a 1-inch crack was found in the lower front spar cap 4 feet outboard of the No. 1 nacelle. The aircraft total time was 23,909 hours. Repairs were made in accordance with the manufacturer's instructions.

(3) During walkaround inspection, a fuel leak was noted at the left wing. Investigation revealed a crack at the bottom front spar rail at approximately wing station 246.75. Repairs being accomplished in accordance with service report. The total time since overhaul is 2,652 hours.

(4) During periodic inspections, and by use of dye penetrant, a 3-inch crack was found in the left wing at station 2, lower rib just forward of the aft spar. Total aircraft time was 21,684 hours.

c. Nacelles/Pylons.

(1) During visual and dye penetrant inspection, two cracks approximately 3/4 inches long were detected on the right nacelle inboard longeron at the center hinge attachment area at the gear door. Total aircraft time was 34,606 hours.

(2) During a visual and dye penetrant inspection, a 1¼-inch crack was detected in the lower radius of left nacelle outboard longeron at center hinge under saddle block. Repaired in accordance with manufacturer's repair manual. Total aircraft time is 32,583 hours.

(3) A 1 3/4-inch crack in the left nacelle lower inboard longeron at center door hinge for landing gear door was detected by visual and dye penetrant. Also, a 4-inch crack was detected in the top left nacelle beltframe at inboard hinge for top cowling. Repairs were made in accordance with manufacturer's repair manual. Total time on aircraft was 33,129 hours.

(4) During a visual inspection, a 1-inch crack was detected at right nacelle on the longeron below center door hinge at station 362.61. Aircraft total time was 33,827 hours.

(5) During a visual and dye penetrant inspection, a 3¼-inch crack was detected above the center door hinge casting on left nacell lower outboard longeron. Repair was made in accordance with th manufacturer's repair manual. The total time on the aircraft was 33,209 hours.

d. Hydraulic.

(1) During flight, crew noted the loss of hydraulic fluid. Investigation revealed hydraulic bypass valve P/N 110775 cracked. Valve was replaced.

(2) While in a cruise condition, hydraulic quantity gauge indicated empty. Hydraulic pressure was down to 2,000 psi. Investigatio revealed the left hydraulic pump pressure line elbow was cracked. The line and fitting replaced and system operation was normal.

(3) Flight returned to field fifteen minutes after takeoff due to loss of hydraulic fluid. Investigation revealed pressure fitting on unloader valve broken. Total time since aircraft overhaul is 1,850 hours.

(4) Aircraft lost hydraulic fluid in flight. Investigation revealed nose steering line broken and right hydraulic pump defective.

(5) The flight returned after fifteen minutes the auxiliary hydraulic pump could not be turned off with on-off switch. A relay was found shorted and replaced. The total time since overhaul is 2,127 hours.

3. CV-240T AIRCRAFT MAINTENANCE INFORMATION. The following is a listing of significant maintenance difficulties that have been reported by air carriers as mechanical reliability reports from 1964 to 1967. This information may be useful in identifying additional structural inspection areas:

a. Fuselage.

(1) During inspection, a crack 1 3/16 inches long was found in the left side beam angle in nose gear wheel. The repair was made in accordance with structural repair manual. The total aircraft time since overhaul is 13,450 hours.

(2) After takeoff, cargo door warning light came on. Investigation revealed the "C" bin door aft hook attach bracket was broken at hole for spring attachment. Bracket replaced. The time since last inspection was 172 hours.

(3) Flight returned due to a reported air leak in the direct vision window. Aircraft was depressurized. Investigation revealed a loose window sill. Total time since overhaul 844 hours.

(4) During preflight inspection, the doublers for the ADF pressure box were found cracked between stations 148.8 and 155.2. The stringer doublers on both sides of the ADF pressure box, P/N 340-3130812, were replaced and reinforced angles installed between doublers. Total time on aircraft was 19,332 hours.

b. Nacelles/Pylons.

(1) During a periodic inspection, a 2½-inch crack was found in right nacelle upper inboard engine mount nacelle longeron and a 2-inch crack in upper outboard longeron. Repaired in accordance with Convair instructions. Total aircraft time since overhaul is 662 hours.

(2) During a fleet campaign, in accordance with the manufacturer's instructions, a 3-inch crack was found in the inboard upper longeron fitting trailing edge of No. 2 nacelle.

c. Stabilizer.

(1) On periodic inspection, a piece of skin approximately 1½ inches x 8 inches was found curled and cracked on the top side of outboard elevator hinge inspection plate. The repair was made in accordance with the manufacturer's structural repair manual.

4. CV-340T AIRCRAFT MAINTENANCE INFORMATION. The following is a listing of significant maintenance difficulties that have been reported by air carriers as mechanical reliability reports from 1964 to 1967. This information may be useful in identifying additional structural inspection areas:

a. Fuselage.

(1) Inspection of the left-hand hydraulic equipment access door frame, P/N 340-3110601-17, during basic check period revealed a 6-inch crack at the top portion at station 109.

(2) During check period, inspection of the right-hand floor structure brace at beltframe station 92 to floor beam revealed a crack at the lower end that attaches to the beltframe. The "f" angle brace was replaced.

(3) The windshield on the captain's side, P/N 340-3110301, cracked in flight. Windshield was replaced and aircraft returned to service. Total time since last inspection was 193 hours.

(4) An unscheduled landing was made due to the door warning light coming on at 5,000 feet. A bad connection at the belly compartment door microswitch was repaired. The total time since last inspection was 65 hours.

(5) After twenty-five minutes of flight, the aircraft returned because the cargo door warning light came on at approximately 14,000 feet. Investigation revealed the "A" bin door switch out of rig. The switch was rerigged. Total time since aircraft overhaul was 120 hours.

(6) The aircraft returned after takeoff since door warning light was on. During aircraft touchdown, light went out. The cargo pit doors were opened and closed and warning light operated satisfactorily. Aircraft was released to service. Total time since last inspection was 318 hours.

(7) Flight returned to departure point when door warning light came on. Investigation revealed that the rear cargo door switch, P/N 340-3150749, was loose in the bracket under the floor. The switch was tightened and rerigged. The total time on aircraft was 32,982 hours.

(8) During a maintenance check, a 1-inch crack was found in the right window frame, P/N 340-3110314-14, at the lower inboard carrier. The window frame was replaced. Time since overhaul was 1,241 hours.

(9) Flutter of the elevator was reported at 225/240 knots. Inspection after landing revealed that the second hinge pin from the outboard end had failed. Fracture occurred at the threaded end of the pin at the last thread root.

(10) Flight returned due to loss of pressurization. Investigation revealed a hole in the upper forward cargo door seal, Convair seal P/N 340-3010603-7. Time since overhaul was 935 hours.

b. Wings.

(1) During inspection of the right and left wing interspar structure, the following lower skin Z angle stringers were found cracked:

(a) At access hole number 19 in left wing fuel cell, the aft inboard bottom Z angle stringer cracked between ribs numbers 9 and 10 at stations 189 and 211.

(b) At access hole number 20 in the left fuel cell, the forward Z angle cracked between ribs numbers 9 and 10 at stations 253 and 275.

(c) In the right wing fuel cell at access hole number 19, the forward and aft Z angle stringers inboard cracked between ribs numbers 9 and 10 at stations 189 and 211.

(d) The lower forward and aft outboard Z angle stringers cracked between ribs numbers 9 and 10 at stations 189 and 211.

(e) At right wing access hole number 20, the lower forward and aft outboard Z angle stringers cracked between ribs numbers 12 and 13 at stations 253 and 275.

All cracks in the stringers in right and left wing were less than 2 inches long except outboard stringer in right wing at access hole number 20. This crack was 3 3/8 inches in length. All stringers were repaired in accordance with the manufacturer's structural repair manual. Total time on aircraft is 21,175 hours.

(2) During preflight inspection, a fuel leak was noted in the left wing front spar area. Investigation revealed a 1 1/4-inch crack in the front spar lower rail at wing station 249½. Crack extended from the edge of the forward tang up to the first rivet on the vertical leg. Inspection of the right wing revealed a ¼-inch crack in front spar lower spar rail forward tang extending from edge to the screw hole at station 246½. The total time on the airframe is 25,131 hours. The total time since overhaul is 13,194 hours.

(3) During a maintenance check, a crack was found in the left wing lower skin at station 163. The crack emitted from the outboard rivet in the forward outboard finger of inspection plate number 15 cutout doubler and extended approximately 2½ inches chordwise. A doubler was installed per Convair structural repair manual. A fleet inspection was conducted on all aircraft for similar failure. Total time on aircraft is 25,282 hours.

(4) The left elevator tab skin was found cracked on the top surface at the outboard push/pull rod attach point. The crack was approximately 1 inch aft of the tab front spar. Three rivets were found loose and one rivet was missing in the front spar at the point where the tab push/pull rod attach fitting support brackets are located. Tab P/N 9015021-1 was replaced. Manufacturer developing modification for the tab. Inspection of tabs will be conducted in accordance with manufacturer's recommendations.

(5) During a maintenance check, a crack was found in the right flap station 2 lower track support fitting, P/N 340-7310313-14, forward of the rear spar. The crack ran vertically from the top of the fitting through the 2 rear rivets for approximately 1¼ inches. The track support fitting was replaced.

(6) During a special elevator inspection, the left horizontal stabilizer new spar web was found to have several small cracks at station 150.3 where the short push/pull rod to the idler bracket attaches. The angles, P/N 9015079-99 and 9015079-101, were also cracked to the extent that several small pieces were separated from the main body. Total aircraft time since overhaul is 3,161 hours.

c. Nacelles/Pylons.

(1) During inspection, a longitudinal crack was found on right nacelle bottom outboard longeron extending aft 7 inches from nacelle station 155. Repairs made in accordance with the manufacturer's repair manual. Total aircraft time is 33,526 hours.

(2) During maintenance check, the lower inboard nacelle longeron in the left nacelle was found to be cracked in the Z angle, P/N 340-6210316-7, just above the center hinge bracket. The crack was approximately 1½ inches long and running chordwise.

d. Hydraulic Fluid.

(1) During flight, pilot reported hydraulic fluid quantity indication dropping. Investigation revealed A/C hydraulic pump warning switch leaking. Replaced warning switch.

* APPENDIX 5. MODEL 240 AND 600/240D (STC # SA 1054 WE) SERIES AIRCRAFT.

1. LANDING GEAR.

a. Main Landing Gear Drag Strut.

(1) Cracks have been reported in the upper drag struts at the center pivot point.

(2) Refer to Service Engineering Report 67-240-38/2D-18 dated 6 March 1967.

b. Nose Landing Gear Drag Strut.

(1) Two instances have been reported where the upper left hand nose landing gear drag strut had fatigued and cracked. The crack originated in a sharp edge at the intersection at the side of the strut and the bottom of a defect.

(2) Refer to Service Engineering Report 15-4-240-17 dated 4 April 1960.

c. Nose Landing Gear Strut Outer Cylinder.

(1) Cracks have been found in the nose landing gear strut outer cylinder.

(2) Refer to Service Bulletin No. 32-2 dated 22 February 1968.

d. Nose Landing Gear Uplock Quadrant.

(1) Investigation following a nose landing gear retracted landing indicated that a lug failed on the P/N 240-5250109-6 uplock quadrant.

(2) Refer to Service Bulletin No. 32-3 dated 13 August 1969.

e. Nose Landing Gear Axle Cracks.

(1) Cracks have been reported in nose landing gear axle.

(2) Refer to Service Airgram 178A dated 5 April 1957. *

*2. FUSELAGE.

a. Cockpit Area Skin Cracks.

(1) Skin cracks have been experienced originating at rivet holes in the upper row of rivets in the horizontal skin splice extending aft from the lower aft corner of the pilots sliding window opening.

(2) Refer to Service Engineering Report 6820/64-240-27 dated 12 June 1964.

b. Windows.

(1) Investigation of two cockpit sliding window failures indicated a need for expansion of inspection methods.

(2) Refer to Service Bulletin No. 53-4 dated 20 November 1970.

c. Forward Direct Vision Window.

(1) Cockpit direct vision window fixed frames have been found cracked at the corners.

(2) Refer to Service Bulletins No. 52-2 dated 18 June 1970 and No. 53-3 dated 17 August 1970.

d. Cabin Windows.

(1) Cracks, delamination, and vinyl separation of the cabin windows have been experienced.

(2) Refer to Service Bulletin No. 53-4 dated 20 November 1970.

e. Cracks at Corners of Door and Window Openings.

(1) Cracks have been discovered at the corners of the door and window openings.

(2) Refer to Service Bulletin 240-413 dated 13 April 1951. *

*3. EMPENNAGE.

a. Horizontal Stabilizer Spar Fitting.

(1) One operator has reported finding a left hand stabilizer front spar upper attach fitting with the forward lug broken.

(2) Refer to Service Engineering Report 66-240-36/2D-6.

b. Horizontal Stabilizer Front and Rear Spar Upper Fittings.

(1) One Model 600 Dart operator has reported both subject fittings found cracked on one horizontal stabilizer.

(2) Refer to Service Bulletin 240-448A dated 5 May 1954, Service Bulletin No. A55-1 dated 25 October 1968 and Service Engineering Report 057-0/66-240-36/20-6 dated 6 July 1966.

c. Rudder Stop.

(1) Excessive pressure exerted during ground operations has deflected the rudder stop structure.

(2) Refer to Service Bulletin 240-187 dated 2 December 1948.

4. WING.

a. Lower Surface Skin at Station 3.

(1) Several instances have been noted where wing skins have developed cracks at Station 3.

(2) Refer to Service Engineering Report 15-4-240-6 dated 12 May 1958.

b. Lower Surface Skin Stations 1 - 5.

(1) Cracks have been noted in the wing lower surface skins around the access doors from Stations 1 to 5.

(2) Refer to Service Bulletin 240-435 dated 11 October 1957.

c. Lower Surface Skin - Station 7.

(1) Skin cracks have been experienced during inspection of wing lower surface skin at Station 7.

(2) Refer to Service Bulletin 240-437 dated 28 November 1952. *

* d. Lower Surface Skin.

(1) Cracks have appeared 6 to 8 inches inboard from Station 8 on the inboard end of lower skin.

(2) Refer to Service Bulletin No. A57-2A dated 22 April 1968.

e. Lower Surface Skin.

(1) One operator has reported cracks in the lower surface wing skin at the aft inboard corner of the wing main fuel tank, just outboard of Station 8.

(2) Refer to Service Bulletin No. 57-3 dated 22 January 1971.

f. Bulkhead Rails Stringer Attachment.

(1) The bulkhead rail stringer attachment in the fuel tank area is susceptible to damage due to fuel surge loads imposed during flight.

(2) Refer to Service Bulletin 240-400B dated 13 November 1952.

g. Trailing Edge Lower Surface - Center Section.

(1) Under certain conditions, flap operation and flight vibrations may cause the trailing edge channel to roll and damage the skin around the rivets and screws.

(2) Refer to Service Bulletins 240-58 and 240-224 dated 30 December 1948 and 3 November 1949.

h. Upper Surface Scuff Shield - Model 600(240D) Only.

(1) Operators report abrasion of the wing upper surface where the engine tail pipe insulating blanket extends beyond the edges of the existing scuff shield.

(2) Refer to Service Engineering Report 67-600-37/640-38 dated 28 June 1967.

i. Corrosion of Station 8 Upper Surface Splice Plate.

(1) Corrosion has been reported on the Station 8 upper surface splice plate.

(2) Refer to Convair Liner Newsletter Volume 1, No. 8 dated March 1966. *

*5. NACELLE.

a. Upper Longeron - Model 240 Only.

(1) Several instances of nacelle upper longerons broken have been reported.

(2) Refer to Service Engineering Report 15-4-240-5 dated 23 April 1958.

b. After Body Vertical Beam - Model 240 Only.

(1) Failures have been noted on the nacelle after body vertical beam.

(2) Refer to Service Bulletin 240-221 dated 17 February 1949.

c. Side Cowl Inner Skin - Model 240 Only.

(1) Cracks have been noted on the engine side cowl panels at the ends of the reinforcing beads in the cowl inner skin.

(2) Refer to Service Bulletin 240-66A dated 11 January 1949.

d. Oil Filler Access Door - Model 600(240D) Only.

(1) The oil filler door bows out in flight leading to early failure.

(2) Refer to Service Bulletin No. 54-1 dated 7 April 1966.

e. Cracks in Engine Mount Fittings.

(1) Cracks and loose fasteners have been found on the engine mount fittings.

(2) Refer to Service Bulletin 240-326 dated 14 March 1950. *

* APPENDIX 6. MODEL 340/440 AND 640/340D/440D (STC # AS 1096 WE) SERIES AIRCRAFT

1. LANDING GEAR.

a. Main Landing Gear and Nose Landing Gear Drag Strut Pivot Bolts.

(1) The possibility of cracks developing in bolts presently in service can be reduced by chamfering all of the lube hole terminals.

(2) Refer to Service Engineering Report 6820/64-340-50/440-50 dated 14 February 1964.

b. Main Landing Gear Apex Bolt Menasco P/N 528076.

(1) Several reports have been received concerning cracks in the main landing gear apex bolt.

(2) Refer to Service Engineering Report 6820-340-46/440-46 dated 28 August 1962.

c. Main Landing Gear Actuating Cylinder Rod and Piston.

(1) Recently several operators have reported cracks and/or failures of P/N 340-5150117-13 retaining screw. Failure was of a fatigue nature.

(2) Refer to Service Engineering Report 15-4-34012A/440-11A dated 10 May 1965.

d. Main Landing Gear Drag Strut.

(1) Operators have experienced cracks in the upper drag struts at the center pivot point.

(2) Refer to Service Engineering Report 057-0/67-340-62/440-61 dated 6 March 1967.

e. Nose Landing Gear Drag Strut.

(1) Cracks have developed in the nose landing gear drag strut at an external sharp corner.

(2) Refer to Service Engineering Report 15-4-340-44A/440-44A dated 16 June 1961 and Service Engineering Report 15-4-340-38/440-38 dated 4 April 1960. *

* f. Nose Landing Gear Strut Outer Cylinder.

(1) Cracks have been found in the nose landing gear strut cylinders.

(2) Refer to Service Bulletin No. 32-1 dated 22 February 1968.

g. Nose Landing Gear Uplock Quadrant.

(1) Investigation following a nose landing gear retracted landing indicated that a lug failed on the P/N 240-5250109-6 uplock quadrant.

(2) Refer to Service Bulletin No. 32-2 dated 13 August 1969.

h. Main Landing Gear Axle.

(1) Cracks have been found in the main landing gear axle.

(2) Refer to Service Bulletin No. 32-3 dated 31 October 1969.

i. Nose Landing Gear Axle Cracks.

(1) Cracks have been found by the operators in the nose landing gear axles.

(2) Refer to Service Airgram 178A dated 5 April 1957.

2. FUSELAGE.

a. Cockpit Area Skin.

(1) Cracks have been reported in the fuselage skins immediately aft of the cockpit sliding window.

(2) Refer to Service Engineering Report 6820/64-340-53/440-53 dated 12 June 1964.

b. Striker Bolt Channel and Main Entrance Door Interlock Hook.

(1) Operators have reported that deflection of the main entrance door striker bolt P/N NAS 428 H 5-14 when it contacts the interlock hook resulted in failure of the hooks to engage.

(2) Refer to Service Engineering Report 15-4-340-16/440-19 dated 21 April 1958. *

* c. Skin Cracks - Doors.

(1) Fuselage skin cracks have occurred adjacent to the fuselage doors and emergency exit opening.

(2) Refer to Service Bulletin No. 53-1 dated 11 September 1968.

d. Beltframe Attachment to Nose Landing Gear Wheel Well - Station 92.

(1) Operators have reported cracks in the "TEE" bracket, P/N 240-3110100-731 (LH), -732 (RH) that attaches the Station 92 beltframe to the side of the nose landing gear wheel well.

(2) Refer to Service Bulletin No. 53-4 dated 17 August 1970.

e. Windows.

(1) Investigation of a cockpit sliding window failure has indicated a need for expansion of inspection methods.

(2) Refer to Service Bulletin No. 53-5 dated 13 November 1970.

f. Windshield Lower Longeron.

(1) The windshield lower longeron connecting channel has been found cracked.

(2) Refer to Alert Service Bulletin No. 53-3 dated 27 March 1970.

g. Direct Vision Window Frames.

(1) Cracks have been found at the corners of the direct vision window frames.

(2) Refer to Service Airgram No. 225 dated 23 August 1957.

h. Corrosion of Emergency Exit Frames.

(1) Corrosion areas have been found by some operators on the emergency exit frames.

(2) Refer to Service Engineering Report 15-4-1591 dated 15 March 1960.

i. Aft Fuselage Stringers.

(1) Recent inspection of stringers in the aft fuselage has revealed numerous cracks in stringers at frame attachments.

(2) Refer to Service Bulletin No. 53-6 dated 3 March 1971. *

*3. EMPENNAGE.

a. Rudder Support Channels.

(1) Structural failure in the area of the rudder support channels caused by compression and tension loads of the rudder torque tube is a possibility.

(2) Refer to Service Bulletin 340-147 dated 25 April 1955.

b. Vertical Stabilizer Front Spar Rails.

(1) Cracks have been found in the radius where the leading edge attaches.

(2) This problem found only on Navy (R4Y) aircraft. No service data published.

c. Rudder Stop Angle Failures.

(1) Failures of the rudder stop angles have occurred.

(2) Refer to Service Airgram 174 dated 4 May 1956.

4. WING.

a. Front Spar Lower Rail.

(1) Cracks have been found in the front spar lower rail on aircraft in service.

(2) Refer to Service Engineering Report 057-0/67-340-64/440-64 dated 31 May 1967.

b. Splice Plate - Station 8.

(1) During the Model 340 wing fatigue test, a crack developed at the Station 8 splice plate area after approximately 270,000 cycles.

(2) Refer to Service Engineering Report 6820-340-47B/440-47B dated 15 January 1963 and Service Engineering Report 15-4-340-18B/440-22B dated 3 February 1965.

c. Main Landing Gear Beam.

(1) Operators have reported cracks in the main landing gear beam web upper flange radius.

(2) Refer to Service Bulletin No. 57-3 dated 17 April 1970. *

* d. Main Landing Gear Drag Link Fittings.

(1) Operators have been finding cracks in the main landing gear drag link fittings attached to the front spar.

(2) Refer to Service Bulletin No. 57-5A dated 20 July 1970.

e. Main Landing Gear Trunnion Fitting.

(1) Cracks have been found in the main landing gear trunnion fittings.

(2) Refer to Service Bulletin No. 57-4 dated 25 May 1970.

f. Lower Surface Skin.

(1) One operator reported a crack in the wing lower skin and horizontal rail of the left wing front spar lower rail at Wing Station 6.75.

(2) Refer to Service Bulletin A57-6 dated 1 June 1970.

g. Lower Surface Stringers.

(1) Stringers No's. 7 and 9 have been found cracked at the ends in the radius of the skin flange adjacent to the wing access doors at stations 9, 10, 12, 13, 15 and 16.

(2) Refer to Service Bulletin 340-148 dated 31 December 1954.

h. Station 0 Bulkhead Installation.

(1) Cracks have been experienced at the corner radius of spot-facing on splice forgings at wing station 0.

(2) Refer to Service Bulletin 340-94 dated 12 May 1953.

i. Trailing Edge.

(1) Trailing edge skins are found deformed in service.

(2) Refer to Service Bulletin 340-104.

(3) Trailing edge ribs are being worn by the aileron cable.

(4) Refer to Service Engineering Report 6-2-340-2/440-4 dated 15 November 1957. *

* j. Lower Surface Skin Station 9.5.

(1) While investigating a fuel leak one operator found the doubler at the left hand access door at wing station 9.5 cracked.

(2) Refer to Alert Service Bulletin A57-2 dated 13 March 1968.

k. Nacelle Lower Outboard Longerons.

(1) Cracks have been reported in the nacelle lower outboard longerons.

(2) Refer to Service Engineering Report 6-2-340-1/440-3 dated 6 December 1957.

l. Wing Skin in Area of Main Landing Gear Drag Link Fittings.

(1) Cracks have been found in the wing skin in the area of the main landing gear drag link fittings.

(2) Refer to Service Bulletin No. A57-6 dated 1 June 1970.

m. Nacelle Drag Angles.

(1) Cracks have been discovered in the area where the nacelle drag angle crosses the front spar.

(2) Refer to Newsletter Review page B-2.

n. Inboard Flap Support Structure.

(1) Cracks have been experienced in the flap support structure.

(2) Refer to Service Bulletin 340-221 dated 25 October 1957. *