U.S. Department of Transportation
Federal Aviation Administration

Advisory Circular

Subject: PROTECTION OF AIRPLANE FUEL SYSTEMS AGAINST FUEL VAPOR IGNITION DUE TO LIGHTNING

Date: 4/12/85
Initiated by: ACE-100

AC No: 20-53A
Change:

1. PURPOSE. This Advisory Circular (AC) provides information and guidance concerning an acceptable means, but not the only means, of compliance with Parts 23 or 25 of the Federal Aviation Regulations (FAR), applicable to preventing ignition of fuel vapors due to lightning. Accordingly, this material is neither mandatory nor regulatory in nature and does not constitute a regulation. In lieu of following this method, the applicant may elect to establish an alternate method of compliance that is acceptable to the FAA for complying with the requirements of Section 23.954 and 25.954.

2. SCOPE. This Advisory Circular provides guidance for a means of showing compliance with regulations for protection against lightning fuel vapor ignition hazards to airplane fuel systems of conventional design as well as for those involving advanced composite structures or other new technologies. The document incorporates information and references related to improvements in the state-of-the-art, with respect to lightning effects and verification methods that have taken place since the previous version of this Advisory Circular was published. Ignition hazards addressed include those due to direct effects (on fuel tank structure/components and plumbing) as well as indirect effects on wires or circuits in a fuel vapor cavity (such as fuel quantity probes). Guidance in this document applies to fuel tanks and systems which are a part of the structure of an airplane, as well as externally mounted tanks on wing tips, fuselage, or other parts of the airplane. This guidance applies to systems included in the initial design as well as modifications, such as additional tanks or other fuel system components. Since externally mounted tanks are often located in direct lightning strike zones, they may be especially vulnerable to lightning hazards if not adequately protected.

NOTE: This advisory circular does not address the indirect induced effects (upset or damage) on either analog or digital electronic or electrical systems, except as they relate to fuel ignition hazards.

3. CANCELLATION. Advisory Circular No. 20-53, effective October 6, 1967.

4. RELATED FAR SECTIONS. Part 23, section 23.954, and Part 25, section 25.954.

5. RELATED READING MATERIAL. A comprehensive discussion on this subject, with additional nonregulatory guidance information, is available in the following document: Users Manual for AC20-53A, "Protection of Airplane Fuel System Against Fuel Vapor Ignition Due to Lightning," Report Number DOT/FAA/CT-83/3. This document is available to the public by order through the National Technical Information Service, Springfield, Virginia 22161.

6. BACKGROUND.

a. Airplanes flying in and around thunderstorms are often subjected to direct lightning strikes as well as to nearby lightning strikes which may produce corona and streamer formations on the airplane.

b. Elements of the fuel system are typically spread throughout much of an airplane and occupy much of its volume. They include the fuel tanks themselves, as well as other areas that may contain fuel vapors, plus associated vents, transfer plumbing, electronic controls, and instrumentation. Careful attention to all of these elements is necessary for adequate protection.

c. For purposes of design and provisions of lightning protection, it is assumed that the properties of the fuel used by civil airplanes, both piston and turbine engine powered, are such that a combustible mixture is present in the fuel tank at all times. Therefore, the combination of the flammable fuel/air ratio and an ignition source at the time of a lightning strike could produce a hazardous condition for the vehicle. To prevent this condition from occurring, a review and elimination of the possible ignition sources within the fuel tank/fuel system should be conducted.

d. Assuming that flammable mixtures may exist in any part of the fuel system, some items and areas susceptible to fuel ignition include, but are not limited to, vent outlets, metal fittings inside fuel tanks, fuel filler caps and access doors, drain plugs, tank skins, fuel transfer lines inside and outside of the tanks, electrical bonding jumpers between components in a tank, mechanical fasteners inside of tanks, and electrical and electronic fuel system components and wiring.

e. User's manual contains further discussion and illustrations of hazardous areas and possible corrective measures.

f. Protection of fuel systems from lightning should be accomplished by one of the following approaches:

(1) Eliminating sources of ignition.

(2) Ensuring that allowable tank pressure levels are not exceeded if ignition does occur and/or that the fuel tank atmosphere will not support combustion.

g. The preferred approach is to prevent any direct or indirect source of ignition of the fuel by lightning. Accomplishment of this approach is quite challenging because thousands of amperes of current are conducted, and a spark of $\approx 2 \times 10^{-4}$ joule may be all the energy that need be released inside a fuel tank to initiate a fire or explosion.

7. DISCUSSION.

a. Key considerations of the fuel system/lightning phenomena are:

(1) Flammable mixtures may exist in any part of the fuel system particularly in the tank and/or vent components.

(2) Flammable vapors in vent outlets may be susceptible to ignition by either streamering or direct strokes.

(3) Streamers or corona can contain sufficient energy to serve as an ignition source.

(4) Strike attachment to poorly conductive parts may contain enough energy to cause sparking on the inside of the fuel tank which, in turn, could ignite flammable vapors.

(5) Strike attachments may puncture the skin, heat fuel tank skins, or cause arcing in fuel tank structures.

(6) Lightning currents flowing in fuel system internal components, such as fuel and vent lines, conduits, or internal structural elements may produce electrical sparks capable of igniting flammable vapors. This possibility is of special concern when the tank structure is made of nonmetallic material.

(7) Lightning currents flowing in the airframe can create voltage differences and electromagnetic fields which may induce transient voltages and currents in fuel system electrical wiring and hardware.

(8) Strike attachment may cause deterioration of adhesives/structural bonding or fasteners to the extent that the tank integrity would, or could, be lost.

b. The excellent lightning safety record of civil airplanes is attributed to the high electrical conductivity of the aluminum alloys used in airplane fuel tank construction and to designs which suppress interior sparking at severe lightning current levels.

c. Composite materials, such as the carbon fiber composites (CFC), when used for fuel systems, present difficulties in providing equivalent protection because of their lower electrical conductivity. New construction techniques, such as adhesive bonding, may have limited conductivity for lightning current flow. Also, indirect effects, such as lightning induced voltages in fuel system electrical wiring and other conducting elements, may be more severe within composite structures than within conventional aluminum airframes.

d. Airplane fuel system lightning interaction.

(1) Lightning can be a hazard to airplane fuel systems if they are not properly designed. The protection of a properly designed system may be negated if it is not correctly fabricated and maintained.

(2) The effects of lightning on airplanes can range from severe obvious damage (such as tearing and bending of airplane skins resulting from high magnetic forces, shock waves, and blast effects caused by the high current, and melting of metal skins caused by the lower level longer duration currents of some lightning strikes) to seemingly insignificant sparking at fasteners or joints. However, if the sparking occurs in a fuel vapor space, ignition of the fuel vapor may result with unacceptable explosion damage.

(3) All or a portion of the lightning current may be conducted through fuel tanks or fuel system components. It is important to determine the current flow paths through the airplane for the many possible lightning attach points so that current entry into the fuel system can be safely accounted for by appropriate protective measures.

(4) Metals, low electrical conductivity composite materials (e.g., carbon fiber reinforced composites), and electrical insulating materials (e.g., fiberglass and aramid reinforced composites) all behave differently when subjected to lightning. Yet each of these materials may be used in similar airplane applications (e.g., wing skins or fuel tanks). The metals offer a high degree of electrical shielding and some magnetic shielding, whereas the electrical insulating materials (dielectrics) offer almost no electrical or magnetic shielding. As a result of the latter properties, lightning does not have to come in direct contact with fuel systems to constitute a hazard. Lightning can induce arcing, sparking, or corona in fuel areas which may result in fuel ignition.

(5) The damage when using totally nonconducting materials, such as the fiberglass and aramid (e.g., Kevlar) reinforced composites, can be considerably more severe as the discharge can more easily penetrate into the interior and cause direct fuel vapor ignition.

(6) Lightning strikes can result in sparking and arcing within fuel systems unless they are designed to be spark free. Flammable vapors can be ignited in metal and semi-conducting fuel tanks by arcing and in dielectric fuel tanks by magnetic and electrical field penetration which can cause sparking, arcing, streamer, or corona discharge.

8. DEFINITIONS. See appendix 1 for List of Definitions.

9. APPROACHES TO COMPLIANCE. In general, the steps below outline an effective method to show compliance:

a. Determine the Lightning Strike Zones. Determine the airplane surfaces, or zones, where lightning strike attachment is likely to occur, and the portions of the airframe through which currents may flow between these attachment points. The lightning strike zone locations are defined in paragraph 10b, and guidelines for locating them on particular airplanes are given in paragraph 10c.

b. Establish the Lightning Environment. Establish the component(s) of the total lightning event to be expected in each lightning strike zone. They are the currents and voltages that should be considered and are described in paragraph 11.

c. Identify Possible Ignition Sources. Identify systems and/or components that might be ignition sources to fuel vapor. Ignition hazards may include structures as well as fuel system mechanical and electrical/electronic components associated with the fuel tanks.

NOTE: In order to provide concurrence on the certification compliance, the above three sequential steps should be accomplished, reviewed with the appropriate FAA personnel, and an agreement reached prior to test initiation to prevent certification delays.

d. Establish Protection Criteria. Establish lightning protection pass/fail criteria for those items to be evaluated.

e. Verify Protection Adequacy. Verify the adequacy of the protection designs by similarity with previously proven installation designs, simulated lightning tests, or acceptable analysis. When analysis is utilized, appropriate margins to account for uncertainties in the analytical techniques may be required. Developmental test data may be used for certification when properly documented and coordinated with the certification agency. See section titled "Comparison with Development Tests" of the Users Manual.

NOTE: Except for standard design/installation items which have a history of acceptability, any new material, design, or unique installation should follow the additional guidelines provided herein to ensure certification compliance can be accomplished.

f. Listed below are the steps to be followed as appropriate in assuring compliance with the regulations:

(1) Generate a certification plan which describes the analytical procedures and/or the qualification tests to be utilized to demonstrate protection effectiveness. Test plans should describe the production or test article(s) to be utilized, test drawing(s) as required, the method of installation that simulates the production installation, the lightning zone(s) applicable, the lightning simulation method(s), test voltage or current waveforms to be used, spark detection methods, and the appropriate schedules and location(s) of proposed test(s).

(2) Obtain FAA concurrence that the certification plan is adequate.

(3) Obtain FAA detail part conformity of the test articles and installation conformity of applicable portions of the test setup.

(4) Schedule FAA witnessing of the test.

(5) Submit a final test report describing all results and obtain FAA approval of the report.

10. LIGHTNING ATTACHMENT PHENOMENA.

a. Swept-Stroke Phenomenon.

(1) The lightning channel is somewhat stationary in air while it is transferring electrical charge. When an airplane is involved, the airplane becomes part of the channel. However, due to the speed of the airplane and the length of time that the lightning channel exists, the airplane can move relative to the lightning channel. When a forward extremity, such as a nose or wing mounted engine pod is an initial attachment point, the movement of the airplane through the lightning channel causes the channel to sweep back over the surface as illustrated in figure 1 of appendix 2, producing subsequent attachment points. This is known as the swept-stroke phenomenon. As the sweeping action occurs, the characteristics of the surface can cause the lightning channel to reattach and dwell at various surface locations for different periods of time, resulting in a series of discrete attachment points along the sweeping path.

(2) The amount of damage produced at any point on the airplane by a swept-stroke depends upon the type of material, the dwell time at that point, and the lightning currents which flow during the attachment. Both high peak current restrikes with intermediate current components and continuing currents may be experienced. Restrikes typically produce reattachment of the arc at a new point.

(3) When the lightning channel has been swept back to one of the trailing edges, it may remain attached at the point for the remaining duration of the lightning event. An initial attachment point at a trailing edge, of course, would not be subjected to any swept-stroke action, and therefore, this attachment point will be subjected to all components of the lightning event.

(4) The significance of the swept-stroke phenomenon is that portions of the vehicle that would not be targets for the initial attachment points of a lightning flash may also be involved in the lightning strike process as the lightning channel is swept backwards, although the channel may not remain attached at any single point for very long. On the other hand, strikes that reach trailing edges must be expected to remain attached there (hang-on) for the balance of their natural duration.

b. Lightning Strike Zone Definitions. To account for each of the possibilities described in the foregoing paragraphs, the following zones have been defined:

(1) Zone 1.

i. Zone 1A: Initial attachment point with low possibility of lightning arc channel hang-on.

ii. Zone 1B: Initial attachment point with high possibility of lightning arc channel hang-on.

(2) Zone 2.

i. Zone 2A: A swept-stroke zone with low possibility of lightning arc channel hang-on.

ii. Zone 2B: A swept-stroke zone with high possibility of lightning arc channel hang-on.

(3) Zone 3. All of the vehicle areas other than those covered by Zone 1 and 2 regions. In Zone 3, there is a low possibility of any attachment of the lightning channel. Zone 3 areas may carry substantial amounts of electrical current, but only by conduction between some pair of attachment points.

(4) The zone definitions are in basic agreement with the definitions of earlier versions of this Advisory Circular, except that the former Zones 1 and 2 have been subdivided to account for low and high possibilities of the lightning arc channel hang-on (figures 2 & 3) shown in appendix 2. The locations of these zones on any airplane are dependent on the airplane's geometry and operational factors, and often vary from one airplane to another.

c. Location of Lightning Strike Zones. With these definitions in mind, the locations of each zone on a particular airplane may be determined as follows:

(1) Extremities such as the nose, wing and empennage tips, tail cone, wing-mounted nacelles, and other significant projections should be considered as within a direct strike zone because they are probable initial leader attachment points. Those that are forward extremities or leading edges should be in Zone 1A, and extremities that are trailing edges should be in Zone 1B. Most of the time, the first return stroke will arrive shortly after the leader has attached to the airplane, so Zone 1A is limited to the immediate vicinity (i.e., approximately 18 inches (0.5m) aft) of the forward extremity. However, in rare cases the return stroke may arrive somewhat later, thereby exposing surfaces further aft to this environment. This possibility should be considered if the probability of a flight safety hazard due to a Zone 1A strike to an unprotected surface is high.

(2) Where questions arise regarding the identification of initial attachment locations or where the airframe geometry is unlike conventional designs for which previous experience is available, scale model attachment point tests may be in order. Information on model testing can be found in the User's Manual.

(3) Surfaces directly aft of Zone 1A should be considered as within Zone 2A. Generally, Zone 2A will extend the full length of the surface aft of Zone 1A, such as the fuselage, nacelles, and portions of the wing surfaces.

(4) Trailing edges of surfaces aft of Zone 2A should be considered Zone 2B, or Zone 1B if initial attachment to them can occur. If the trailing edge of a surface is totally non-conductive, then Zone 2B (or 1B) should be projected forward and/or inboard to the nearest conductive surface.

(5) Surfaces approximately 18 inches (0.5m) to either side of initial- or swept-attachment points established by steps (1) and (2) of paragraph c should also be considered as within the same zone, to account for small lateral movements of the sweeping channel and local scatter among attachment points. For example, the tip of a wing would normally be within Zone 1A (except for its trailing edge, which would usually be in Zone 1B). To account for lateral motion of the channel and scatter, the top and bottom surfaces of the wing 18 inches (0.5m) inboard of the tip should also be considered as within the same zones.

(6) Surfaces of the vehicle for which there is a low possibility of direct contact with the lightning arc channel that are not within any of the above zones, but which lie between them, should be considered as within Zone 3. Zone 3 areas must carry substantial amounts of electrical energy.

11. LIGHTNING ENVIRONMENT. For verification purposes, the natural lightning environment (which comprises a wide statistical range of current levels, duration, and number of strokes) is represented by current test Components A through E, and voltage Components A, B, and D (per figures 4, 5 and 6) shown in appendix 2. When testing or analysis are required, the following waveforms should be used. (Applications of waveforms and lightning zones are detailed in appendix 3.)

a. Current Waveforms. There are four current components (A, B, C, and D) that are applied to determine direct effects. Current waveform E is used in tests to determine indirect effects. Components A, B, C, and D each simulate a different characteristic of the current in a natural lightning flash and are shown in figure 4 of appendix 2. They are applied individually or as a composite of two or more components together in one test. The tests in which these waveforms are applied are presented in appendix 3.

(1) Component A - Initial High Peak Current. Component A has a peak amplitude of 200kA (±10 percent) and an action integral ($\int i^2 dt$) of $2 \times 10^6 A^2$ s (±20 percent) with a total time duration not exceeding 500 microseconds. This component may be unidirectional or oscillatory. For analysis purposes, a double exponential current waveform should be used. This waveform represents a return stroke of 200,000 amperes peak at a peak rate of rise of 1×10^{11} A/s. This waveform is defined mathematically by the double exponential expression shown below:

$$i(t) = I_o \left(\varepsilon^{-\alpha t} - \varepsilon^{-\beta t} \right)$$

where

$I_o = 223{,}000$ (A)

$\alpha = 11{,}000$ (s^{-1})

$\beta = 460{,}000$ (s^{-1})

t = time(s)

(2) Component B - Intermediate Current. Component B has an average amplitude of 2kA (±10 percent) flowing for a maximum duration of 5 milliseconds unidirectional; e.g., rectangular, exponential, or linearly decaying. For analysis purposes, a double exponential current waveform should be used. This waveform is described mathematically by the double exponential.

$$i(t) = I_o (\epsilon^{-\alpha t} - \epsilon^{-\beta t})$$

$$I_o = 11300 (A)$$

$$\alpha = 700 \quad (s^{-1})$$

$$\beta = 2000 \quad (s^{-1})$$

$$t = \text{time (s)}$$

If the dwell time is more than 5ms, apply an average current of 400A for the remaining dwell time. The dwell time shall have been determined previously through a swept-stroke attachment test or by analysis. If such determination has not been made, the dwell time shall be taken to be 50ms.

(3) Component C - Continuing Current. Component C transfers a charge of 200 coulombs (±20 percent) in a time of between 0.25 and 1 second. This implies current amplitudes of between 200 and 800 amps. The waveform shall be unidirectional: e.g., rectangular, exponential or linearly decaying. For analysis purposes, a square waveform of 200A for a period of 1 sec. should be utilized.

(4) Component D - Restrike Current. Component D has a peak amplitude of 100kA (±10 percent) and an action integral of $0.25 \times 10^6 A^2$ s (±20 percent). This component may be either unidirectional or oscillatory with a total time duration not exceeding 500 microseconds. For analysis purposes a double esponential current waveform should be used. This waveform represents a re-strike of 100,000 amperes peak at a peak rate-of-rise of 0.5×10^{11} A/s. The waveform is defined mathematically by the double exponential expression shown below:

$$i(t) = I_o (\epsilon^{-\alpha t} - \epsilon^{-\beta t})$$

$$I_o = 130,000 \ (A)$$

$$\alpha = 27,500 \ (s^{-1})$$

$$\beta = 415,000 \ (s^{-1})$$

$$t = \text{time (s)}$$

(5) Current Waveform E - Fast Rate-of-Rise Stroke Test for Full Size Hardware. Current waveform E has a rate-of-rise of at least 25kA/μs for at least 0.5 microseconds, as shown in figure 4 of appendix 2. Current waveform E has a minimum amplitude of 50kA. Alternatively, components A or D may be applied with a 25kA/μs rate-of-rise for at least 0.5 microseconds and the direct and indirect effects evaluation conducted simultaneously.

i. Indirect effects measured as a result of this waveform must be extrapolated as follows. Induced voltages dependent upon resistive or diffusion flux should be extrapolated linearly to a peak current of 200 kA.

ii. Induced voltages dependent upon aperture coupling should be extrapolated linearly to a peak rate-of-rise of 100 kA/μs.

b. Voltage Waveforms - Test. There are three voltage waveforms, "A," "B," and "D," which represent the electric fields associated with a lightning strike. Voltage waveforms "A" and "D" are used to test for possible dielectric puncture and other potential attachment points. Voltage waveform "B" is used to test for streamers. The tests in which these waveforms are applied are presented in appendix 3.

(1) Voltage Waveform A - Basic Lightning Waveform. Waveform A has an average rate-of-rise of 1×10^6 volts per microsecond ($\pm$50 percent) until its increase is interrupted by puncture of, or flashover across, the object under test. At that time, the voltage collapses to zero. The rate of voltage collapse or the decay time of the voltage if breakdown does not occur (open circuit voltage of lightning voltage generator) is not specified. Voltage waveform A is shown in figure 5 of appendix 2.

(2) Voltage Waveform B - Full Wave. Waveform B rises to crest in 1.2us ($\pm$20 percent). Time-to-crest and decay time refer to the open circuit voltage of the lightning voltage generator, and assume that the waveform is not limited by puncture or flashover of the object under test. This waveform is shown in figure 5 of appendix 2.

(3) Voltage Waveform D - Slow Front. The slow-fronted waveform has a rise time between 50 and 250 microseconds to allow time for streamers from the test object to develop. It should give a higher strike rate in tests to the low probability regions that might have been expected in flight. This waveform is shown in figure 6 of appendix 2.

J. A. Pontecorvo

JOSEPH A. PONTECORVO
Deputy Director, Office of Airworthiness

PURPOSE. For the purposes of this AC, the following definitions apply:

a. Action Integral. The action integral concept is difficult to visualize, but is a critical factor in the production of damage. It relates to the energy deposited or absorbed in a system. However, the actual energy deposited cannot be defined without a knowledge of the resistance of the system. For example, the instantaneous power dissipated in a resistor is by Ohm's Law, $i(t)^2R$, and is expressed in watts. For the total energy expended, the power must be integrated over time to get the total watt-seconds (or kilowatt hours). The watt-second is equivalent to the joule. Without a knowledge of R, we cannot specify the energy deposited. By specifying the integral of $i(t)^2$ over the time interval involved, a useful quantity is defined for application to any resistance value of interest. In the case of lightning, therefore, this quantity is defined as the action integral and is specified as $\int i(t)^2 dt$ over the time the current flows.

b. Attachment Point. A point of contact of the lightning flash with the airplane surface.

c. Average Rate-of-Rise of Voltage. The average rate-of-rise, dv/dt, of a waveform is defined as the slope of a straight line drawn between the points where the amplitude is 30 percent and 90 percent of its peak value.

d. Charge Transfer. The charge transfer is defined as the integral of the time-varying current over its entire duration, $\int i(t)dt$.

e. Corona. A luminous discharge that occurs as a result of an electrical potential difference between the airplane and the surrounding atmosphere.

f. Decay Time of a Voltage Waveform. The decay time of a waveform is defined as the time interval between the intersect with the abscissa of a line drawn through the points where the voltage is 30 percent and 90 percent of its peak value during its rise, and the instant when the voltage has decayed to 50 percent of its peak value.

g. Direct Effects. Physical damage effects caused by lightning attachment directly to hardware or components, such as arcing, sparking, or fuel tank skin puncture.

h. Lightning Attachment. Contact of the main channel of a lightning flash with the airplane.

i. Dwell Time. The period of time that the lightning arc channel remains attached to a single spot.

j. Indirect Effects. The results of electromagnetic coupling from lightning (such as induced sparking in fuel quantity probe wiring).

k. Leader. The stepped leader is initiated by a preliminary breakdown within the cloud. The preliminary breakdown sets the stage for negative charge to be channeled towards the ground in a series of short, luminious steps.

l. Lightning Flash. The total lightning event in which charge is transferred from one charge center to another. It may occur within a cloud, between clouds, or between a cloud and ground. It can consist of one or more lightning strokes.

m. Lightning Strike. Any attachment of the lightning flash to the airplane.

n. Lightning Stroke (Return Stoke). A lightning current surge, return stroke, that occurs when the lightning leader makes contact with the ground or another charge center.

o. Streamering. The branch-like ionized paths that occur in the presence of a direct stroke or under conditions when lightning strokes are imminent.

p. Swept-Stroke. A series of successive attachments due to sweeping of the flash across the surface of the airplane by the motion of the airplane.

q. Time-to-Crest of a Voltage Waveform. The time-to-crest of a waveform is defined as 1.67 times the time interval between the instants when the amplitude is 30 percent and 90 percent of its peak value.

r. Time Duration of a Current Waveform. The time duration of a current waveform is defined as the time for initiation of current flow until the amplitude (peak amplitude in the case of a damped sinusoid) has reduced to 5 percent of its initial peak value.

T_0 - Initial Attachments

T_{1-5} Subsequent Attachments

T_n - Final Attachment Points

(LIGHTNING CHANNEL POSITION
SHOWN RELATIVE TO AIRPLANE)

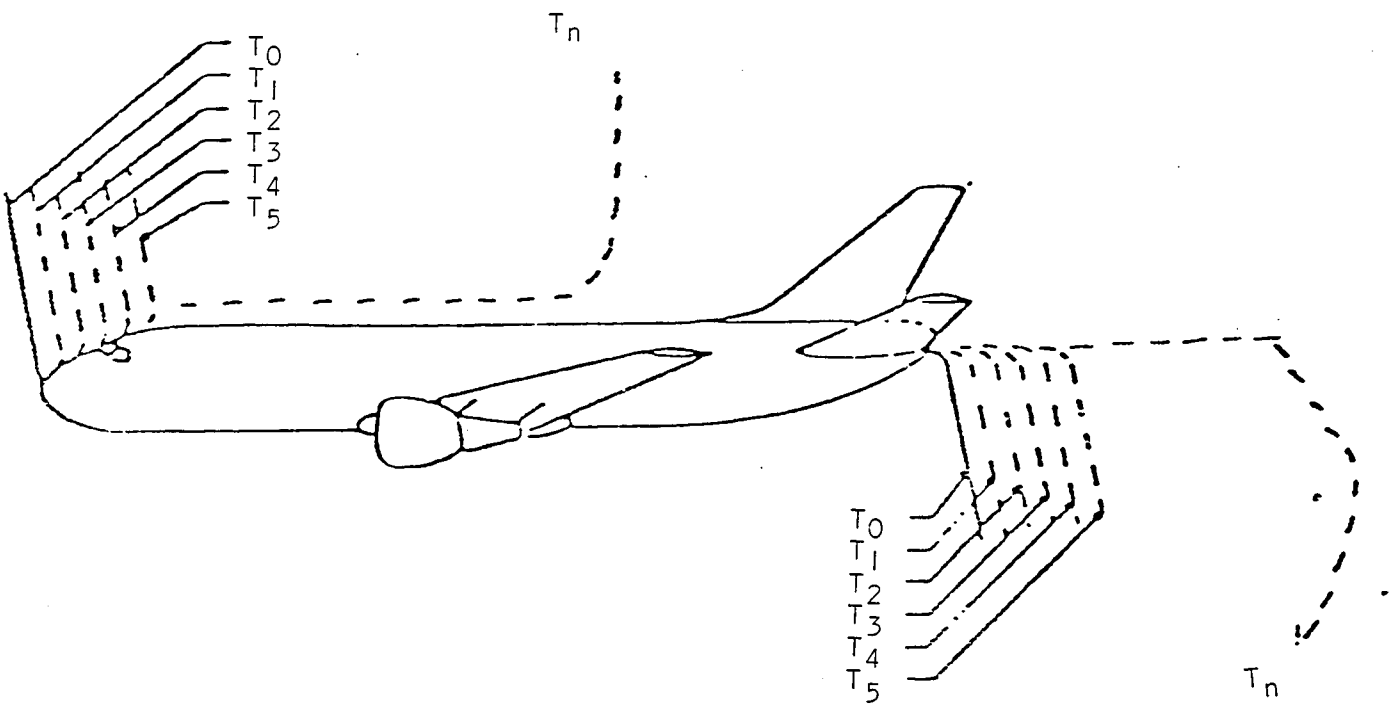

FIGURE 1 - SWEPT-STROKE PHENOMENON

LIGHTNING STRIKE ZONES

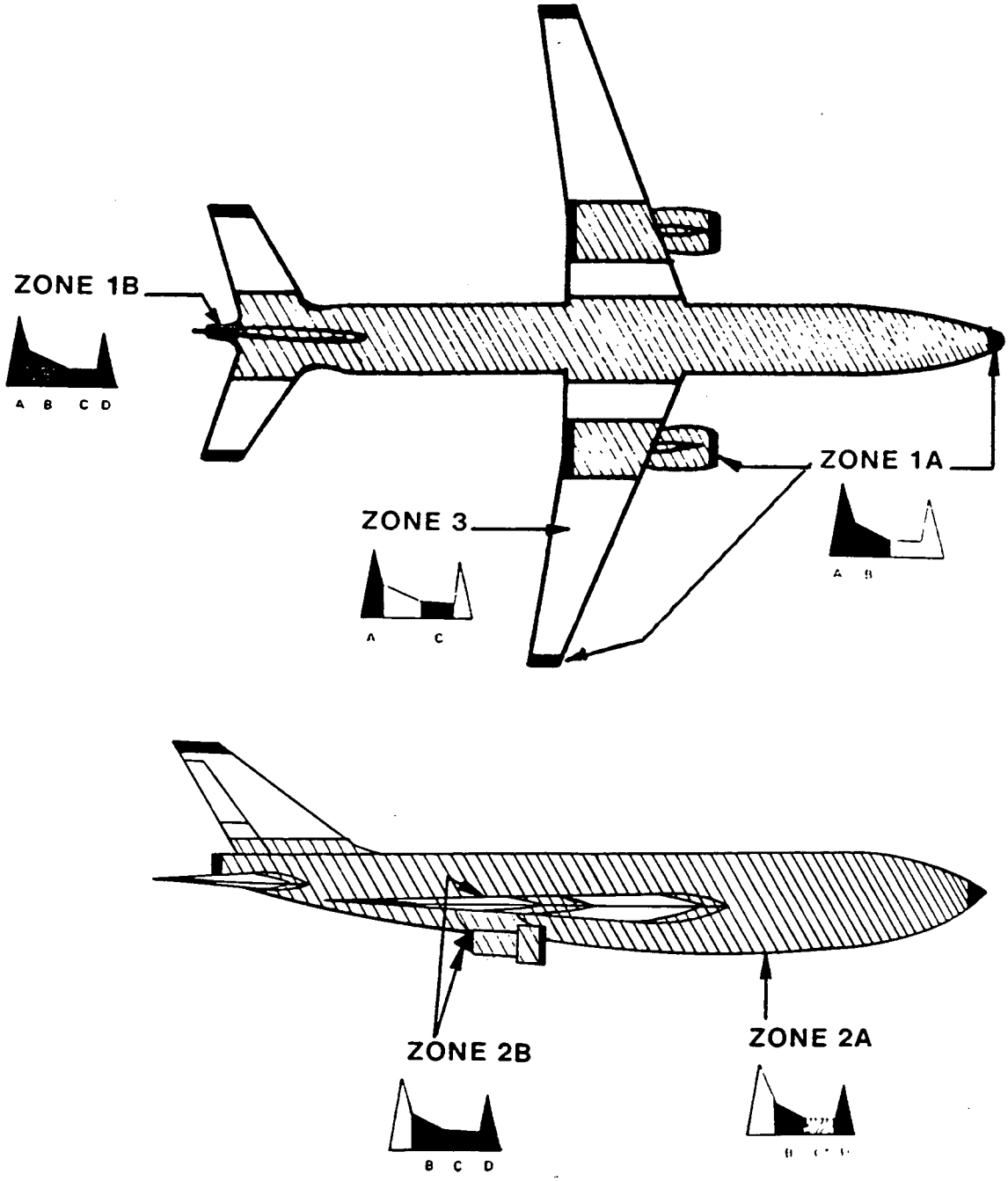

FIGURE 2 LIGHTNING STRIKE ZONES (TYPICAL)

(See paragraph 10C)

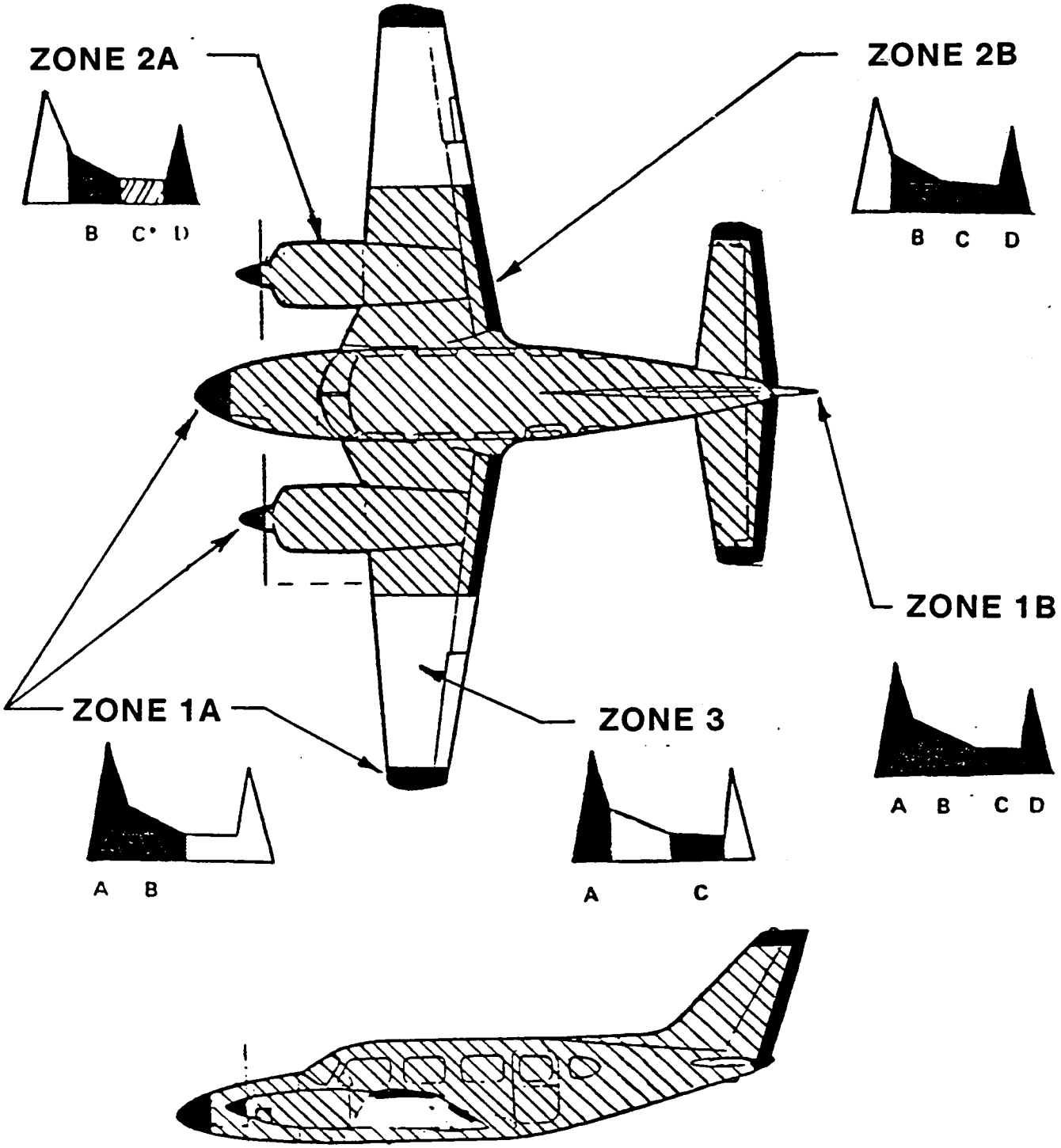

FIGURE 3 LIGHTNING STRIKE ZONES (TYPICAL)
(See paragraph 10C)

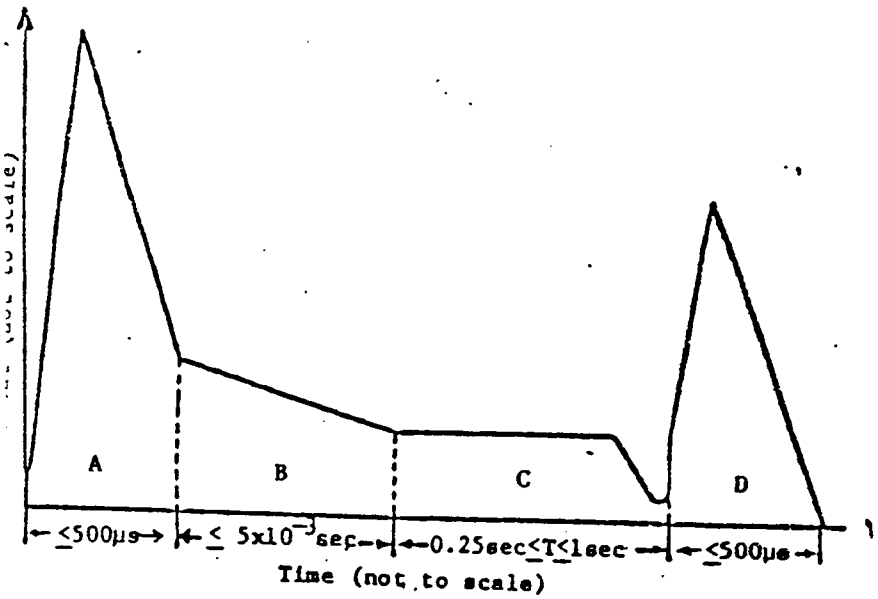

COMPONENT A (Initial Stroke)
- Peak Amplitude = 200kA (±10%)
- Action Integral = $2 \times 10^6 A^2 s$ (±20%)
- Time Duration = ≤500 μs

COMPONENT B (Intermediate Current)
- Maximum Charge Transfer = 10 Coulombs
- Average Amplitude = 2kA (±10%)

COMPONENT C (Continuing Current)
- Charge Transfer = 200 Coulombs (±20%)
- Amplitude = 200-800A

COMPONENT D (Restrike)
- Peak Amplitude = 100kA (±10%)
- Action Integral = $0.25 \times 10^6 A^2 s$ (±20%)
- Time Duration = ≤500 μs

COMPONENTS A THROUGH D WAVEFORMS

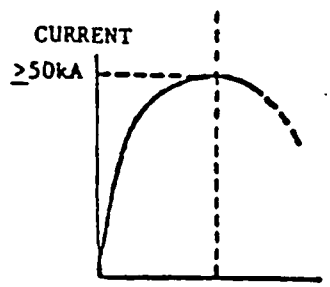

COMPONENT WAVEFORM E
- Peak Amplitude = ≥ 50kA
- Rate of Rise = ≥ 25kA/μs for at least 0.5μs

FIGURES NOT TO SCALE

Rate of Current Rise

Definition of rate of rise requirement of waveform E

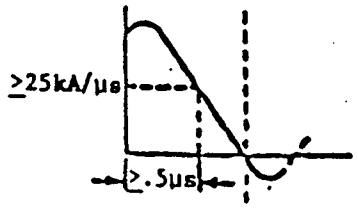

FIGURE 4 CURRENT WAVEFORMS

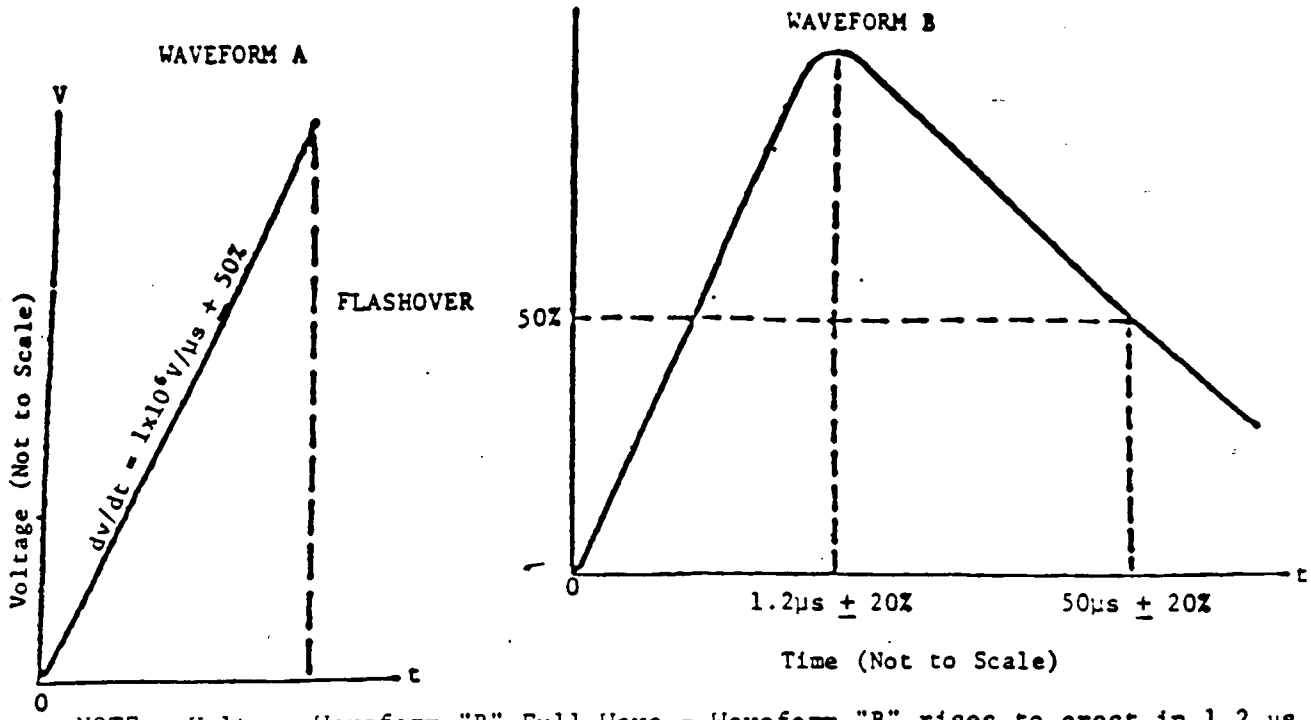

NOTE: Voltage Waveform "B" Full Wave - Waveform "B" rises to crest in 1.2 µs (±20 percent). Time-to-crest and decay time (refer to open circuit voltage) of the lightning voltage generator, and assume that the waveform is not limited by puncture or flashover of the object under test.

FIGURE 5 VOLTAGE WAVEFORMS 'A'&'B'

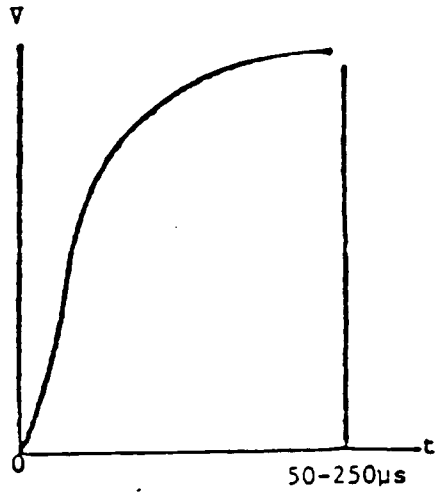

FIGURE 6 VOLTAGE WAVEFORM 'D'

APPLICATION OF WAVEFORMS FOR LIGHTNING TESTS

Test	Zone	Waveforms: Voltage A	Voltage B	Voltage D	Current Components A	Current Components B	Current Components C	Current Components D	Current Components E
Full Size Hardware Attachment Point	1A, 1B	X		X[1]					
Direct Effects Structural	1A				X	X			
	1B				X	X	X	X	
	2A					X[2]	X[2]	X	
	2B					X	X	X	
	3				X		X		
Direct Effects Combustible Vapor Ignition	1A				X	X			
	1B				X	X	X	X	
	2A					X[2]	X[2]	X	
	2B					X	X	X	
	3				X		X		
Direct Effects Corona and Streamers			X						
Indirect Effects Related to Spark Generation Within Fuel Vapor Areas									X[3]

NOTE 1: Voltage waveform "D" may be applied to identify lower probability strike points.

NOTE 2: Use an average current of 2kA ± 10 percent for a period equal to the dwell time up to a maximum of 5ms. If the dwell time is more than 5ms, apply an average current of 400A for the remaining dwell time. The dwell time shall have been determined previously through a swept-stroke attachment test or by analysis. If such determination has not been made, the dwell time shall be taken to be 50ms.

NOTE 3: Indirect effects should also be measured with current components A, B, C, or D as appropriate.

U.S. Department
of Transportation

**Federal Aviation
Administration**

800 Independence Ave., S.W.
Washington, D.C. 20591

BULK MAIL
POSTAGE & FEES PAID
FEDERAL AVIATION ADMINISTRATION
PERMIT NO. G-44

RETURN POSTAGE GUARANTEED

Official Business
Penalty for Private Use $300