U.S. Department
of Transportation
Federal Aviation
Administration

AC 25-8

DATE 5/2/86

ADVISORY CIRCULAR

AUXILIARY FUEL SYSTEM INSTALLATIONS

U.S. Department of Transportation
Federal Aviation Administration

Advisory Circular

Subject: AUXILIARY FUEL SYSTEM INSTALLATIONS

Date: 5/2/86
Initiated by: ANM-110

AC No: 25-8
Change:

1. PURPOSE. This advisory circular (AC) sets forth acceptable means, but not the only means, by which compliance may be shown with the requirements of the Federal Aviation Regulations (FAR) pertaining to the installation of auxiliary fuel systems in transport category airplanes. As with all AC material, it is not mandatory and does not constitute a regulation.

2. SCOPE. This document provides guidance and criteria for the installation of auxiliary fuel systems, i.e., those which supplement essential fuel systems to provide additional range, in transport category airplanes. It is intended primarily for installations in which the auxiliary fuel is carried within the fuselage, such as within cargo or baggage compartments, the main deck or other similar areas. Although the material presented in this AC is generally applicable to other installations that involve changes in primary structure, aerodynamics or mass distribution, such installations may require extensive additional substantiation that is beyond the scope of this AC. Similarly, additional substantiation beyond the scope of this AC would be required for essential fuel system installations. "Auxiliary" and "essential" fuel systems are defined in more detail in Appendix 1 of this AC.

3. BACKGROUND. Currently, many applications for supplemental type certificates (STC) and amended type certificates are being received by a number of the FAA aircraft certification offices for incorporation of additional fuel capacity in existing certificated airplanes. The design and safety concepts for fuel storage and transfer proposed in these applications vary considerably. In addition, some auxiliary fuel system installations are being used for control of the center of gravity (c.g.), which results in fuel usage late in the flight profile. These factors, coupled with the differing requirements that each existing airplane fuel system imposes, complicate an evaluation of the safety and airplane compatibility of the proposed installation.

4. GENERAL. Before determining the auxiliary fuel system configuration and modifying the airplane, the applicant should become familiar with the existing airplane structural and systems characteristics and functions, and with the applicable certification requirements. To avoid structural and systems compatibility problems, a working knowledge of the airplane is essential. In particular, the applicant should determine the effects of the addition of the auxiliary fuel system on payload, c.g., system and airplane operations and

structural margins. When in doubt about any certification requirement, the applicant should consult with the FAA aircraft certification office responsible for his project early in the design program to avoid possible costly changes late in theprogram.

5. CERTIFICATION BASIS.

a. New Type Certificates. For the issuance of a new type certificate, an airplane must be shown to comply with the certification basis established in accordance with § 21.17 of the Federal Aviation Regulations (FAR). If the regulations do not provide adequate or appropriate standards because of a novel or unusual design feature, special conditions may be prescribed in accordance with § 21.16.

b. Other Design Changes. For other design changes, such as the addition of a new model to an existing type certificate or modification of an existing model, the airplane must be shown to comply with the certification basis established in accordance with § 21.101. Generally, the applicant may choose compliance with the regulations incorporated by reference in the type certificate (the original certification basis) or with the applicable regulations in effect on the date of the application for approval of the auxiliary fuel system (current rules). If the original certification basis does not provide adequate or appropriate safety standards because of novel or unusual design features, compliance with current rules may be prescribed in accordance with § 21.101(b). If neither the original certification basis nor current rules provide adequate or appropriate standards, special conditions may be prescribed in accordance with § 21.16. Although sections of Part 25 are referenced in this AC, the references should be interpreted to be the corresponding sections of Part 4a or 4b of the Civil Air Regulations (CAR) when Part 4a or 4b is the original certification basis.

c. Unsafe Features or Characteristics. Notwithstanding compliance with the established certification basis, § 21.21 precludes approval if there is any feature or characteristic that makes the airplane unsafe. The applicant should recognize that it may be necessary, because of such a feature or characteristic, to impose special requirements which exceed the standards of the certification basis, to eliminate the unsafe condition.

6. PROCEDURES. In order to avoid delays and possible expensive redesign, it is strongly recommended that the following procedures be followed. The applicant should:

a. Submit a proposed overall certification plan that identifies the essential steps or actions and the sequence anticipated for submitting reports, drawings, process specifications, analyses, tests and other documentation to complete the installation approval. This program should include the proposed or target schedule for the FAA approval tests and inspections required.

b. Generate a certification test plan which describes the analytical procedures or qualification testing to be used to demonstrate the design

adequacy. Each plan should list the applicable FAR and describe how each requirement will be met. In addition, the plan should include a description of the airplane or test articles to be used, drawings, method of production simulation (if applicable), and the target date for installation and test. The certification test plan should be submitted for review and concurrence by the appropriate FAA aircraft certification office prior to initiation of tests, to prevent certification delays.

c. Obtain FAA concurrence that each certification test plan is adequate.

d. Obtain FAA conformity inspection of the test installation.

e. Schedule and conduct the ground and flight test(s) with FAA witnessing.

f. Submit a final test report describing all test results and obtain FAA approval.

LEROY A. KEITH
Manager, Aircraft Certification Division

For sale by the Superintendent of Documents, U.S. Government Printing Office Washington, D.C. 20402

CONTENTS

Paragraph Page No.

CHAPTER 1 - FUEL SYSTEM INSTALLATION INTEGRITY AND CRASHWORTHINESS

1. STRUCTURAL INSPECTION 1
2. TANK LOCATION CRITERIA 5
3. AIRPLANE FUEL SYSTEM COMPATIBILITY 7

CHAPTER 2 - AUXILIARY FUEL SYSTEM ARRANGEMENT

4. GENERAL ARRANGEMENT EVALUATION 11
5. FUEL SYSTEM CONTAMINATION PREVENTION ASSESSMENT 15
6. IGNITION SOURCE ISOLATION EVALUATION 17

CHAPTER 3 - COMPONENT MATERIALS

7. GENERAL 25
8. ENVIRONMENTAL PROPERTIES EVALUATION 25
9. COMPOSITES 27

CHAPTER 4 - AUXILIARY FUEL SYSTEM PERFORMANCE

10. GENERAL 29
11. NORMAL OPERATION EVALUATION 29
12. FAIL-SAFE AND EMERGENCY OPERATION EVALUATION 33

CHAPTER 5 - IMPACT OF SYSTEM ON AIRPLANE OPERATION AND PERFORMANCE

13. ENGINE OIL SYSTEM CAPACITY . . . . . .

14. MAIN FUEL SYSTEM CAPACITY AND FLOW REGULATION . . . . . .

15. RADIO FREQUENCY INTERFERENCE . . . . . .

16. AIRPLANE CENTER OF GRAVITY CONTROL . . . . . .

CHAPTER 6 - USER INSTALLATION REQUIREMENTS

17. AIRPLANE PLACARDS AND INSTRUMENT MARKING EVALUATION . . . . .

18. AIRPLANE FLIGHT MANUAL (AFM) . . . . . .

19. WEIGHT AND BALANCE MANUAL INFORMATION . . . . . .

20. MAINTENANCE MANUAL . . . . . .

APPENDIX 1

1. DEFINITIONS . . . . . .

CHAPTER 1 - FUEL SYSTEM INSTALLATION INTEGRITY AND CRASHWORTHINESS

1. STRUCTURAL INSPECTION.

a. General. Survivable accidents have occurred at vertical descent velocities greater than the 5 feet per second (f.p.s.) referenced in § 25.561. The energy from such descents is absorbed by the structure along the lower fuselage. As the limits of survivable accidents are approached, structure under the main cabin floor is crushed and deformed and the volume below the floor, where the auxiliary fuel tanks are frequently located, may be reduced and reshaped. For this reason the tank material chosen by the applicant should provide resilience and flexibility; or, in the absence of these characteristics, the tank installation should provide extra clearance from structure that can be crushed or be protected by primary structure not likely to be crushed. If lightweight composite structure with brittle failure characteristics is chosen, compliance with current regulations or special conditions may be required.

b. Design Criteria and Structural Loads (§§ 25.25, 25.365, 25.561, 25.963 and 25.965).

(1) The extent of structural substantiation required depends on the magnitude and location of the added fuel and the modifications required to accommodate the fuel tank installation. Generally, evaluation of the tank attachment hardware and local structure will be sufficient; however, as noted earlier, installations that involve changes to primary structure, aerodynamics or mass distribution may require additional extensive substantiation that is beyond the scope of this AC. Any increase in maximum weight or changes in c.g. limits to increase the utility of the airplane with the auxiliary fuel system installed is also beyond the scope of this AC.

(2) The tank design should isolate the tank from airframe induced structural loads and from deformations induced by the wing and fuselage.

(3) The fuel tank and its attachment and support structures must be designed to withstand all design loads, including the emergency landing load specified in § 25.561(b).

(4) Fuel loads included in the structural substantiation should be based on the most critical density of the fuels approved for use in the airplane.

(5) A particular fuel tank design may require cyclic pressure testing to its service life limit using appropriate scatter factors.

(6) In accordance with the requirements of § 25.963(d) regarding retention of the auxiliary fuel, it should be shown by a crashworthiness analysis or the equivalent that the airplane lower fuselage and auxiliary fuel

tank supporting structure are capable of withstanding the crash loads found in § 25.561. Dynamic loads defined by the crashworthiness analysis should be accounted for in the stress analysis.

(7) Sufficient vehicle structural crush distance should be available to avoid auxiliary fuel tank ground contact under the loading conditions of § 25.561(b). Compliance may be shown by analysis and where necessary by test. The analysis should identify the failure mode and define the interaction between the tank and adjacent structure and between adjacent tanks.

(8) Structural deformation must be shown to be controllable and predictable, as required by § 25.965.

(9) The fuselage forebody and afterbody are limited to design values of distributed loads that cannot be exceeded without extensive resubstantiation and possible modification to primary structure. Trade-offs between passengers, cargo, and fuel may be made provided the allowable floor, bulkhead and local shell loads are not exceeded.

(10) Airplane Flight Manual (AFM) limitations and procedures affecting fuel management may be required to ensure that structural limitations are not exceeded.

(11) Bottom and lower structure that is adequate for tank load distribution and protection against rupture in crash landing should be provided for all tanks. Consideration should be given to eccentricities introduced into the basic airframe from fuel tank attachments.

(12) The following must be considered in the evaluation of the tank and tank support structure in accordance with the applicable certification basis:

(i) Tank internal pressure developed during malfunction of the pressure shut-off means and pressure induced by engine bleed air (if applicable).

(ii) Applicable load factors, including the effects of cabin pressurization, with maximum fuel in the tank.

(iii) When located inside the pressure hull of the airplane, the tank should be designed to withstand the pressure differential resulting from the pressure inside the tank at maximum cruise ambient altitude and that of the cabin at the maximum pressure relief valve setting.

(iv) When the tank is located inside the pressurized section of the fuselage, the fuselage structure must be strong enough to withstand the pressure differential loads corresponding to the maximum relief value setting by a factor of 1.33, omitting other loads. This is a limit load condition which requires a safety factor of 1.5 to obtain ultimate loads.

(v) Except as provided in § 25.625(b), a fitting factor of at least 1.15 must be applied to all tank support fittings and their attachment to the tank.

(vi) All probable combinations of fuel distribution in multiple tanks, including slosh, should be accounted for in defining tank structural loads and airplane weight and balance.

(vii) To preclude rupture and provide durability, the face sheet thickness should be sufficient for the applicable load requirements and to prevent accidental damage. Where aluminum is used for these purposes, thicknesses are typically not less than .040 inch for the outer face sheets or .020 inch for the inner face sheets.

(viii) To facilitate inspection and to isolate primary structure from tank corrosion, the tank should generally not be designed as an integral part of the body structure.

c. Structural Modification.

(1) Where existing structure is being modified for the tank installation, adequate reinforcement should be added as necessary to maintain structural integrity equal to or better than the original structure.

(2) Modifications, such as cutouts, tank support attachments, and service openings through exterior skins, should not degrade structural load capability or lead to reduced fatigue capability. If holes must be cut through the pressure vessel for auxiliary fuel system lines, etc., special care should be taken to reseal the penetrations, particularly those affecting the pressure vessel. The fuselage should be pressure tested in accordance with the requirements of § 25.843 if major modifications to the cabin pressure vessel are made.

(3) The effect of the modification on the existing maintenance program, including the structural supplemental inspection program, if applicable, must be considered and appropriate changes made in accordance with § 25.1529.

d. Crash Overload. Hard attachment points between the fuel tank and airframe structure restrict relative motion and, in turn, impose high concentrated loads on both the tank and the airframe. In order to limit the magnitude of these concentrated loads, crash load failure points are typically located between the tank and airframe. In addition:

(1) Attachment point loads should be evenly distributed to minimize the possibility of fuel tank rupture.

(2) In the event of an overload condition, the failure should occur at some point between the tank attach fitting and the basic airframe and floor structure to minimize potential body tank rupture. Where possible, the design

should prevent failure of the tank support from causing failure of the fuel lines, for the maximum tank displacement that could occur. It may be necessary to incorporate redundant supports or secondary constraint bulkheads to accomplish this.

e. Damage Tolerance and Fatigue Evaluation. Each structural element of the tank structure which could contribute to catastrophic failure must be evaluated. Airplanes for which the certification basis includes § 25.571, as amended by Amendment 25-45 or subsequent amendment, must be evaluated using damage tolerance criteria or, as provided by § 25.571(c), by fatigue (safe-life) criteria. Airplanes having earlier certification basis may be evaluated using fail-safe criteria.

(1) For fail-safe design, it must be shown by analysis, tests, or both, that catastrophic failure or excessive structural deformation, that could adversely affect the flight characteristics of the airplane, are not probable after fatigue failure or obvious partial failure of a single principal structural element. After these types of failure of a single principal structural element, the remaining structure must be able to withstand certain prescribed loads considered as ultimate loads.

(2) For safe-life design, the structure must be shown by analysis, tests, or both to be able to withstand the repeated loads of variable magnitude expected in service. The evaluation must include the typical loading spectrum expected in service and identification of principal structural elements and detail design points, the fatigue failure of which could cause loss of the airplane.

(3) For damage tolerant design, the structure must be evaluated to ensure that should serious fatigue, corrosion, or accidental damage occur within the operational life, the remaining structure can withstand reasonable loads without failure or excessive deformation until the damage is detected. To achieve this design objective, it is important to draw on test results for design data. Damage-tolerant design is required unless it entails such complications that effective damage-tolerant structure is impractical. Structures for which application of damage tolerance criteria may not be practical include single load path designs where in-service inspections are not feasible due to comparatively small critical crack sizes (tank hangers, attach fittings, single fuel containment structure, joints, splices, fuel lines, etc.). Where damage-tolerant design is impractical, the fatigue characteristics are established to ensure that the anticipated service life can be attained. The fatigue evaluation should be based on test results. In this regard, the tank should be pressure cycled appropriate to its design life and all significant details should undergo fatigue tests including adjoining structure and supports that contribute to an accurate picture of its deflection pattern. If the tank installation results in increased loads to the airframe, and there is a required structural inspection program, the applicant must provide a damage tolerance design assessment and associated airworthiness limitations. If the airframe is safe-life, fatigue substantiation is required. In any event, more

stringent inspections are to be provided where they are needed. Refer to AC 25.571-1, Damage Tolerance and Fatigue Evaluation of Structure, for further guidance concerning damage tolerance.

2. TANK LOCATION CRITERIA.

a. Uncontained Engine Rotor and Blade Failure Considerations (§§ 25.571 and 25.903(d)).

(1) The applicant should evaluate the location of fuel tanks and other major fuel system components from the standpoint of the protection afforded against uncontained engine and auxiliary power unit (APU) rotor or blade failures. For this evaluation the applicant should review the information and recommendations given in Order 8110.11, Design Considerations for Minimizing Damage Caused by Uncontained Aircraft Turbine Engine Rotor Failures, or any superseding FAA guidance material. The applicant should also obtain information about the containment features which may be incorporated in the particular engines or APUs used on the airplane involved. The energy levels of uncontained rotor/blade fragments specified by the engine/APU manufacturer should be used.

(2) The criteria to predict the probable fragmentation scatter, shown in Figure 1, can be used as a generalized guideline. Past service experience has shown that the expected overall fragmentation zone, for both large and small fragments, lies within a total spread angle of approximately ± 15 degrees of the plane of any rotor. In many cases fuel tanks and critical system components can be located outside of these fragmentation zones, thereby minimizing the hazards to the system and the airplane. Where locations within engine fragment zones are unavoidable, the applicant should refer to Order 8110.11 for information and suggestions regarding possible design techniques to minimize the hazards to the airplane. In any event, installation of these types of systems into already certified airplanes should ensure that the basic airplane safety level is maintained and not degraded.

(3) For certification compliance, a report which addresses the above considerations should be prepared and submitted. The report should adequately consider uncontained rotor and blade failures from all engine and APU sources which may effect the integrity of the auxiliary fuel system and show that design precautions have been taken to minimize hazards to the airplane in the event of these failures and that the airplane safety level has not been degraded by the auxiliary fuel tank/system installation.

b. Proximity to High Temperature Ducting and Equipment (§§ 25.609, 25.613(c), 25.981 and 25.1185(a)).

(1) The applicant should evaluate the location of fuel tanks from the standpoint of exposure to heat from other adjacent systems and components. The evaluation should include an analysis of heat exposure due to failure of an adjacent component (for example, the failure of a high temperature pneumatic duct coupling located near the tank). For this evaluation the effects of temperature on the tank allowable stresses should be considered and it should

be shown that no hazardous loss of strength or other unsafe condition will result from the heat exposure.

(2) Consideration of the effects of external heat exposure on the fuel in the tank should also be included in this evaluation. In some cases, although the tank structure will satisfactorily withstand heat exposure, heat conduction through the tank wall could elevate the fuel temperature causing unacceptable engine performance or flammability or explosion hazard (see also Chapter 2, paragraph 6h., Maximum Surface Temperatures). For tanks which use flexible bladder cells, the effects on bladder material due to heat conducted through the supporting tank wall should also be evaluated.

(3) For the particular model of airplane under review, identification of all probable heat sources with respect to the tank system location should be provided, and it should be demonstrated that the tank installation will remain safe even after a single failure of the adjacent system. Detection systems or other means which provide adequate overheat indication are acceptable provided sufficient instructions are provided in the AFM to show the interrelationship of the "failed" system to the auxiliary tank system installation.

c. Proximity to Fuselage Break/Separation Points. Fuselage break points (Appendix 1) are typically found at areas of structural discontinuity in the fuselage shell. Where possible, avoid locating the tank and its support structure at these discontinuities.

d. Installations in Cargo and Baggage Compartments (§§ 25.855(b), 25.855(a-1), (a-2) and 25.857).

(1) The various components of an auxiliary fuel system installed in cargo and baggage compartments should be protected from damage caused by shifting cargo. A cargo barrier should be used to separate the auxiliary fuel system from the cargo. The barrier should be designed to contain the maximum cargo loading for which the compartment is approved under all load conditions including the emergency landing conditions. This barrier may be either a rigid or a flexible type. Solid barriers are sometimes installed to totally separate and isolate the auxiliary fuel system from the compartment, resulting in a reduced compartment size. If the barrier is flexible, consideration should be given to deformation or displacement of the barrier when under load. If minimum tension requirements are necessary to maintain the structural integrity of a flexible barrier, the requirements should be specified and conspicuously displayed in the compartment. Finally, the barrier should prevent any type of bulk cargo, particularly slender or sharp objects, from penetrating components of the auxiliary fuel system, and be structurally capable of preventing cargo from contacting the fuel system installation under all load conditions including emergency landing inertia loads. Alternatively, a barrier would not be needed if it can be shown that the fuel tank system shroud or outer wall can offer equivalent protection to the remaining components of the system. In addition, the auxiliary fuel system installation should not adversely affect intercompartmental venting incorporated in the basic airplane.

(2) When the fuel system is installed in cargo and baggage compartments, ensure all material used, including cargo barriers and replacement compartment liners, meet the applicable flammability requirements. The materials in the fuel system and the cargo barrier, if installed, should protect the fuel system from fire or heat from a fire that could occur in the cargo and baggage compartment. As a minimum, a cargo barrier should meet the flammability requirements of cargo and baggage compartment liners.

(3) If the compartment is a Class B compartment, consideration should be given to the required smoke/fire detector and to the access required for a crewmember to fight a fire. If the compartment is a Class C compartment, care should be taken to avoid interfering with or reducing the effectiveness of the approved smoke or fire detector, built-in fire-extinguishing system or ventilation control system. If the compartment is a Class D compartment, consideration should be given to retaining the effectiveness of the ventilation control system and to the prolonged effect of heat from a smoldering fire on the fuel tank system. Classification of the type of cargo and baggage compartment in which the auxiliary fuel system is to be installed should be defined by the applicant and verified by the applicable FAA aircraft certification office.

(4) If holes must be cut through cargo and baggage compartment liners for auxiliary fuel system lines, care should be taken to reseal the liner. If the fuel system is installed in a cargo and baggage compartment and if positive sealing cannot be verified by inspection or localized test, the certified allowable leakage from the compartment should be obtained and evaluated with the auxiliary fuel system total leakage included to ensure that the compartment classification is not affected. This may require a flight test.

(5) When the auxiliary fuel system is designed to be quickly removed, consideration should be given to the method for resealing or plugging holes while the system is removed. Complete maintenance instructions should be provided detailing the method of removal, resealing and restoring the airplane essentially to its original configuration.

3. AIRPLANE FUEL SYSTEM COMPATIBILITY (§§ 25.901(c), 25.951, 25.953, 25.955, 25.957 and 25.961).

a. Configuration Criteria.

(1) The auxiliary fuel system should be evaluated in conjunction with the essential fuel system to ensure that no hazardous fuel transfer or feed conditions exist. The criteria used to make this evaluation will depend on the type of auxiliary fuel system selected. The requirements for the two primary types of auxiliary fuel systems, the transfer and the direct feed type, vary considerably. The transfer type system supplies fuel from the auxiliary tank to an existing main tank or tanks. The direct feed system supplies fuel, in at least one operating mode, directly to an engine.

(2) The requirements for a direct feed auxiliary fuel system are considerably more stringent than those for a transfer auxiliary fuel system. These requirements, in general, ensure that an uninterrupted flow of fuel at the required pressure and flow rate is provided to each engine for all operating conditions of the airplane. These requirements also address altitude performance effects and low and high temperature fuel aspects as well as providing fuel system independence in at least one configuration. Failure mode and effects analyses (FMEA) are needed to ensure that no hazardous conditions exist due to a failure of the auxiliary system. Continuous engine operation should be verified when the auxiliary tank system is depleted of fuel, to prevent engine flameout or other unacceptable operating conditions.

(3) Transfer type system requirements are not as stringent but do require basic fuel system considerations such as damage to tank and vent lines due to excessive pressure from over filling, high and low temperature fuel effects, transfer rates, drainage, altitude effects, etc. The auxiliary tank depletion characteristics, especially for bleed pressurization type systems, should also be evaluated to ensure air entrainment, overpressure, etc., does not alter main tank performance. The applicant will need to determine when transfer to an essential system tank should be established and whether transfer should be in increments or continuous. The auxiliary tank quantity, flow rates, essential system tank levels, etc., are considerations for when to initiate transfer and should be a part of the AFM procedures.

b. Interface Considerations.

(1) The interface of the auxiliary fuel system and the existing airplane fuel system should be evaluated. Use of existing fuel system lines and manifolds can provide considerable weight savings; however, the functions of these lines should be checked to ensure that the added usage does not conflict with other requirements. For example, auxiliary fuel tanks might be pressure fueled from the existing airplane fueling receptacle(s); however, in many cases, the pressure fueling manifold is also used for emergency fuel dumping or as part of the engine crossfeed system. The use of portions of the original system may create conflicting flow requirements if not thoroughly checked, particularly when a component failure, such as a valve failing to open or close, is involved.

(2) Another example is the use of the existing airplane vent system for venting of the auxiliary tank(s). The existing vents have been sized to maintain acceptable pressure levels during refueling and flight maneuvers. When combining the systems, the applicant should verify that no failure conditions result in an overpressure condition, i.e., during refueling or emergency descent. Some systems may require two phase flow analysis (air venting from one tank and liquid fuel venting from another tank through a combined vent system). If the essential fuel system tanks use flexible tank liners, it may be necessary to show by analysis or test that the combined vent system does not cause any hazardous bladder collapse in the essential system tanks due to rapid descent or other operating condition.

(3) When the auxiliary fuel system arrangement has been determined and the interfaces with the main fuel system established, a total system failure mode analysis should be conducted to ensure that no hidden failures in the system will lead to an unsafe operating condition. Analyze the system for all modes of operation, including venting, pressure fueling, defueling, transfer, engine feed, crossfeed, and emergency fuel dumping. For example, the auxiliary tank system should be designed so that failure of the system will not result in uncontrollable transfer of fuel from the main tank to the auxiliary tank when the main tank system is in its normal operating configuration.

c. Other Considerations. Other systems must also be evaluated for compatibility with the auxiliary fuel system. Ensure that the auxiliary fuel system electrical power demands do not overtax the airplane electrical system. Use auxiliary fuel system cockpit indicators and nomenclature which are compatible with the existing cockpit displays. Cockpit instrument compatibility is especially important for the two-man crew cockpit, where pilot workload can become a critical factor and should be evaluated for acceptability when required. Adequate cockpit display to indicate auxiliary tank depletion or improper fuel scheduling should be provided and cockpit indication of low fuel state, c.g. unbalance or other unsafe condition should be considered for the particular installation.

Figure 1

OVERALL FRAGMENTATION ZONES

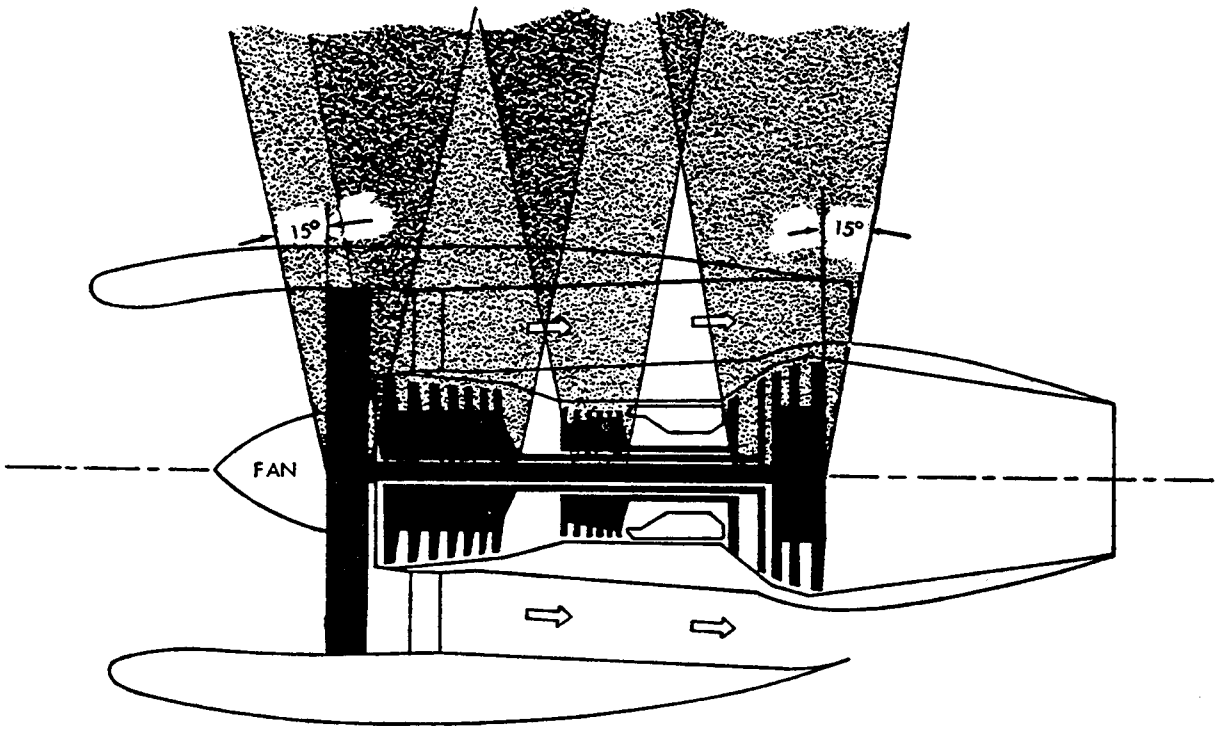

CHAPTER 2 - AUXILIARY FUEL SYSTEM ARRANGEMENT

4. GENERAL ARRANGEMENT EVALUATION.

a. System Layout. In addition to the criteria described in the previous section, consideration should be given to the following:

(1) Line Routing, Flexibility and Support (§ 25.993).

(i) General fuel system practices should be adhered to in installing fuel and vent lines. All flexible lines should be adequately supported along the entire line installation length. Ensure that lines will not chafe against control cables, airframe structure or other equipment items. Avoid locating lines near high temperature sources or near electrical wiring. Where close proximity of a fuel line to electric wiring is unavoidable, locate the fuel line so that leakage cannot drip onto the wiring. Ensure that the fuel line is adequately clamped to structure to maintain the required spacing. Do not support wire bundles from fuel or vent lines. If adequate compartment ventilation or fuel line shrouding cannot be provided, isolation of electrical wiring from fuel lines may require a vapor barrier or a conduit for the wiring. (See Chapter 2, paragraph 4a(4).)

(ii) Consider the crashworthiness characteristics of the line routing. Where possible, interconnect tanks, rigid metal lines and other major fuel system components with flexible lines. Allow sufficient flexible line length to permit some shifting of the components without breaking the lines or connections. The flexibility of the entire fuselage auxiliary fuel line routing should be sufficient to account for fuselage break points. If lines are routed near structural members, the effect of "guillotine" or slashing action due to a crash landing should be addressed. When routing fuel lines through cabin floor structural lightening holes is necessary, provide sufficient clearance to prevent line severing due to floor deformations on a crash landing. A crashworthiness evaluation report of the auxiliary fuel system installation should be submitted during certification which shows, by analysis or test, that precautions have been taken to minimize the hazards due a survivable crash environment.

(2) Fuel Tank and Component Location, Access, Mounting and Protection (§§ 25.901(b)(ii), 25.963, 25.965, 25.993 and 25.994).

(i) Each auxiliary fuel tank or tank module design should be evaluated for the basic requirements of §§ 25.963 and 25.965. These requirements address, for example, the basic integrity of the tank, bladder cell requirements, pressurized tank requirements and the tank tests, such as, slosh and vibration, that may be required.

(ii) As a general rule, all components, such as valves, pressure transmitters or switches, filters, etc., should be directly mounted to the airplane structure or to supports which are directly attached to the structure. If fuel or other system lines or fittings are used to support auxiliary fuel

system "in-line" small/lightweight components, it should be shown that this practice does not result in excessive structural stresses when subjected to the vibration and other loads expected in service.

(iii) Although function will dictate the appropriate location of components in the airplane, there is usually some latitude which will allow selection of a specific area which is more suitable than others. Component location should be considered from the aspects of both access and protection. Access is especially important for components which will require routine periodic inspection and maintenance such as strainers, filters and drain valves or components with known short service life expectancy. Where possible, such components should be located in areas where there are currently existing access doors and openings on the airplane. When new access provisions are required, lightning and crashworthiness vulnerability as well as structural security should be considered.

(iv) Locating components in areas where there is a high probability that they can be stepped on or tripped over by personnel during the routine servicing or maintenance of the airplane should be avoided. The crashworthiness of the location should also be considered. Components should not be installed below the fuselage cargo floor if they may be crushed, scraped off, or cause penetration into the auxiliary fuel tank which can result in leakage during a wheels-up landing. Protection from damage due to shifting baggage and other objects which may not be tied down in the cargo area should be provided. See Chapter 1, paragraph 2d for cargo barrier criteria.

(v) For components which must be located inside the fuel tanks, the crashworthiness aspects of the installation should be considered. Means to prevent component sharp edges from penetrating the tank surface due to deflection of the surface under crash load conditions should be provided, especially where flexible tank bladder cells are used.

(3) Tank Penetration Points (Access, Quantity Probes, Float Switches and Fuel Fittings) (§§ 25.963, 25.973, 25.975, 25.977).

(i) The location and arrangement of all tank penetration points should be considered. Tank penetration points are all locations where openings exist in the tank walls for access (inspection or repairs), for mounting fuel quantity probes, float switches, etc., and for tank venting, drainage and fuel transfer or fueling.

(ii) Auxiliary tanks should have access openings large enough to permit completion of required inspections. Component and line penetrations may be usable as access/inspection openings, dependent on size and location, and should be evaluated for acceptability.

(iii) All tank fuel line to airplane structure attachments should be evaluated for the flight, flight vibration and crash loads which may be transmitted to the tank walls. From the crashworthiness standpoint, to prevent fuel tank fittings from being torn out of the tank wall, it may be advisable to

consider the need for frangible disconnect valves or fittings, mounted on the external surface of the tank, which separate and shut off any hazardous fuel flow from the tank in event of a crash. However, a failure analysis must show that inadvertent closure of these frangible fittings will not interfere with continued safe flight.

(4) Electrical Wiring Routing and Support (§§ 25.1301 and 43.13). The following practices should be adhered to for wire routing and support; however, in all cases, clearance between wires and fuel or oxygen lines and control cables should be adequate to prevent damage due to deflections of structure or support which may occur during a survivable crash.

(i) A minimum clearance of 3 inches between wires and any control cable should be maintained unless a shield is provided.

(ii) Wires should be located above (preferably), or on a level with, metallic fluid lines. A minimum clearance of 6 inches between wires and combustible fluid or oxygen lines should be maintained whenever possible. Where a 6-inch clearance cannot be maintained, install additional clamps to provide separation. The fluid lines should not be used as a means of supporting wire bundles. Additional clamps should be installed to support the wire bundle and these clamps fastened to the same structure used to support the fluid or oxygen lines to prevent relative motion.

(iii) A minimum separation of at least 1/2-inch should be maintained between noncombustible plumbing lines and any wire.

(iv) Wires and wire bundles should be supported with clamps meeting Specification MS-21919, Clamp, Looptype, Cushion Support, or equivalent.

(v) Where wires or wire bundles pass through cutouts in bulkheads or other structural members, a grommet and suitable clamp should be provided to prevent abrasion if the clearance is less than 1/4-inch.

(vi) Refer to AC 43.13-1A, Acceptable Methods, Techniques, and Practices--Aircraft Inspection and Repair, for more details regarding routing and supporting of wires, acceptable methods, techniques and practices-aircraft inspection and repair.

b. Fuel Containment Secondary Barriers (§§ 25.967, 25.863). For auxiliary fuel systems which are located in the passenger or cargo and baggage compartments (Appendix 1), isolation of the fuel and fuel vapors from other areas of the compartment is of critical importance. Tanks, line fittings, connections and other components, such as valves, pressure transmitters, regulators etc., must be shrouded or provided with redundant barriers such that leaks from any of these sources will not present a fire hazard. Some of the important characteristics of the secondary barrier system are:

(1) The system should be capable of containing and isolating any leakage. To contain any leakage, integrity at the maximum system operating pressure should be demonstrated.

(2) Secondary barrier spaces should be vented and drained in accordance with acceptable practices to prevent the accumulation of fuel or fuel vapor. The drain system also serves as a periodic visual means of detecting any leakage in the auxiliary fuel system. For this reason, shroud drains should not be connected to other types of fluid drain systems.

(3) The secondary barrier drain system materials, construction and sealing characteristics must be compatible with fuel and capable of long life under the altitude/cabin pressure cycling, vibration and wear to which they will be exposed in service.

(4) The drain system should be reviewed from the installation location aspects to preclude the possibility of inadvertant damage by ground personnel or shifting cargo.

c. Tank, Fuel and Vent Line and Component Shrouds (§ 25.967).

(1) Auxiliary fuel tanks installed in a passenger or cargo and baggage compartment should be completely shrouded. This means that all fittings connected to and through the tank walls should also be provided with secondary barriers. Figures 2 and 3 show some acceptable designs for shrouding equipment items and fittings installed on or through the tank walls. Each tank penetration design should be reviewed to ensure a single failure (such as a seal failure) does not result in fuel or fuel vapors entering the compartment. A primary seal with a secondary shroud/seal provides the required protection if indication of a primary seal failure is also provided and the secondary seal is pressure tested periodically.

(2) All vent and fuel fittings and connections in a passenger or cargo compartment should also be shrouded. An example of this is shown in Figure 4.

(3) Valves and other components, unless otherwise protected, can have possible leak paths through shafts and at control motor or solenoid connections or other seals in addition to their line connections, and should be completely shrouded.

(4) Electrically operated components are of particular concern because of the possible need to route electrical leads through the secondary barrier spaces. The space should be considered an abnormal vapor zone containing flammable fluid similar to the interior of the fuel tank. Thus an evaluation of the electrical connector and wiring temperatures should be made for both normal and fault load conditions. It may be necessary from this evaluation to install the wiring in vapor-proof conduit, except where shown to be intrinsically safe.

d. Fuel Tank Secondary Barrier Cavity Venting (§ 25.967). The changes in tank secondary barrier cavity pressure during all airplane maneuvers, including emergency descent, must be accounted for in the design of the auxiliary fuel tank. Bladder type tanks may be critical under emergency descent conditions,

depending on the cavity vent line sizing. The vent/drain configuration must provide the required positive and negative pressure relief between the outer shell and the bladder or inner wall to prevent collapse or over expansion of the inner tank. Depending on the location of the overboard vent/drain exit and the airflow characteristics around the exit or exit mast, a flight test may be required to evaluate the emergency descent characteristics of the cavity vent system with the airplane in both the "clean" and "wheels and flaps down" configuration.

e. Other Secondary Barrier Vent and Drain Provisions (§§ 25.954 and 25.967).

(1) All secondary barrier spaces should be vented and drained. The spaces in some designs are manifolded for venting and drainage as shown in the figures in the previous section or are independently vented and drained. In Figures 2 and 3 the tank fitting cavities are ported into the tank shroud cavity proper. In Figure 4 the line fitting shroud vents to the tank fitting cavity; and this cavity, in turn, is vented to the tank shroud cavity. Eventually all cavities must vent and drain to an exit external to the airplane. The overboard exit should be located to prevent fluid reingestion into such areas as the wheelwell and other critical areas of the airplane. On many airplanes there are existing exit drain masts, which are used to vent and drain the secondary barrier cavities of the airplane main fuel tanks or shrouds. The use of these existing drain masts is recommended. The attachment of the auxiliary system drain to the existing airplane drain should ensure that backflow does not occur in either system.

(2) For secondary barriers located in passenger or cargo areas, the cavity vent and drain exit should always be open and vented to ambient pressure. Avoid the use of push-to-drain valves at both ends of the drain to check the cavity condition. Multiple drain outlets utilizing push-to-drain or other type valves should not inhibit venting.

(3) If a new exit mast is required, consider carefully the location and configuration from the standpoint of lightning vulnerability and conductivity (see Chapter 2, paragraph 6b). Drain masts should not be located upstream of air inlets or other openings in the airplane external surface. Physical inspection by the cognizant FAA personnel of all drain locations on the actual airplane should be accomplished to ensure all interfaces are considered. Verification that liquid discharge from the mast will flow clear of the airplane and not impinge or reenter at another airplane surface should be accomplished by impingement tests conducted in flight. Ensure that freezing does not occur during the tests and that the test results will be representative of a fuel leak.

5. FUEL SYSTEM CONTAMINATION PREVENTION ASSESSMENT (§§ 25.971, 25.977 and 25.997). The primary concerns of fuel contamination with respect to auxiliary fuel system design are water and debris contamination. The certification requirements are quite specific, and the installer should be familiar with the requirements of § 25.971, Fuel Tank Sumps, and § 25.977, Fuel Tank Outlets.

There may also be a need to refer to § 25.997, Fuel Strainer or Filter. This regulation would be applicable for auxiliary fuel systems which feed fuel to a positive displacement pump which in turn feeds the engine or to some alternate auxiliary fuel tank direct engine feed system. The existing main fuel system design should already satisfy § 25.997 requirements. The installer should, however, verify that these requirements are maintained when an auxiliary fuel system is installed. The following features should be considered with respect to auxiliary fuel system contamination.

a. Fuel Tank Sumps and Fuel Strainers.

(1) Sump Location and Capacity.

(i) Sumps should be installed at the lowest point in the auxiliary fuel system with the airplane in its normal ground static attitude. This will allow water in the system to migrate to the sump where it can be drained before flight. The sump may be an integral part of the tank, providing the bottom of the tank is the lowest point in the system, or may be a separate tank specifically installed for sumping purposes. If the sump is a separate tank and located within a passenger or cargo compartment, it should be designed to the shrouding criteria set forth in the previous section for fuel tanks including the overboard drain exit requirements. Separate sump tanks should not be located below the cargo compartment floor if they will be vulnerable to damage in the event of a wheels-up landing.

(ii) Sumps and sump tanks must have the capacity specified in § 25.971. If a separate sump tank is used for a number of tanks or modules that are interconnected together to function as a single tank system, the required capacity of the sump is based on the capacity of the total tank system.

(2) Sump Drain Provisions. All sumps should have provisions which allow complete drainage of the sump. These drainage provisions should be carefully designed to provide high reliability in service and a high degree of crashworthiness. Drain valves should be positive locking and reliable. Drain valve installations should provide double seals to prevent overboard leakage from a single seal failure. Lightning aspects of the overboard access should be addressed as discussed in the next section. Locate the drain valve at or near the sump. Do not locate drain valves on the bottom surface of the fuselage or other areas where they may be inadvertently damaged or opened. In passenger/cargo compartments, sump drains should be shrouded in accordance with the provisions described in the previous section and the shrouds provided with vents per normal shroud procedures. The shrouded fitting between the sump drain and the overboard penetration should provide a "fuse" point or other means to ensure that upward penetration of the tank does not occur during a crash landing.

(3) Fuel Strainers (§§ 25.951(c) and 25.977).

(i) One purpose of using a fuel tank outlet strainer is to prevent the intrusion of debris of a size sufficient to damage or jam components

downstream of the tank outlet. Fuel strainers of this type should be used in the fuel tank outlets of auxiliary tank systems which transfer fuel by mechanical pump means or which have gravity fuel fillers incorporated, where there is a probability of debris inadvertently entering the tank.

(ii) The mesh or size requirements are defined in § 25.977. However, because of the problem of icing, the effective flow area of the strainer should be selected considering also the requirements of § 25.951(c). Fine mesh screen should not normally be used in this application.

b. Fuel and Vent System Low Points (§ 25.975). Avoid creating low points in routing fuel and vent lines. This condition is usually a problem where long fuselage runs of flexible fuel lines/shrouds are installed. It is particularly important to eliminate low spots in vent and drain lines, where water may collect and freeze, blocking the lines. Unavoidable shallow low areas may be acceptable without drains if fluid can not collect to any appreciable degree. Where traps in the vent system are unavoidable, drains should be installed. Depending on the particular design, these drains may allow the fluid to flow back to the tank. Auxiliary tank vent systems should ensure that fuel sloshing in the main tank vent line does not enter the auxiliary vent system in unacceptable quantities. Where possible, drain lines should be routed to provide continuous down slope to the drain exit so that complete drainage is accomplished with the airplane in the normal ground attitude. If not possible, consider adding sump type drain valves at the applicable low points. Where drain valves are required use the criteria discussed in the previous sections.

6. IGNITION SOURCE ISOLATION EVALUATION.

a. System Electrical Bonding (§ 25.863, MIL-B-5087B). All auxiliary fuel system conductive components such as electrical equipment, fuel tanks, lines, etc., should be electrically bonded to airplane structure. If two or more components are grounded in series, both ends of the ground circuit should be grounded to ensure that the loss of an intermediate ground connection will not leave any component isolated from ground. The bonding jumper should be as short as practicable and installed in such a manner that the resistance of each connection does not exceed .003 ohm. Special emphasis should be placed on bonding when addressing nonmetallic or composite auxiliary fuel tank/systems. The applicable auxiliary fuel system installation drawings should identify the discrete attachment points requiring bonding. The surface treatment(s) required should also be specified by an applicant's specification(s) which should be submitted to the cognizant certification office during certification. Verification of adequate bonding should be accomplished during installation and when maintenance is performed on the auxiliary fuel system in the airplane.

(1) Wiring Isolation in Fuel or Fuel Vapor Environment.

(i) Electrical power wiring in fuel or fuel vapor environment should be adequately protected to prevent damaged wire(s) from igniting

fuel/fuel vapor. Installation of the electrical power wiring in a metallic conduit is an acceptable method to meet this criteria. Electrical power wiring is the wiring that is connected to a power source.

(ii) Flexible conduit conforming to Specification MIL-C-6136, Conduit; Electrical, Flexible, Shielded, Aluminum Alloy for Aircraft Installation, Types I or II, or equivalent, may be used where it is impractical to use rigid conduit, such as, areas that have motion between conduit ends or where complex bends are necessary.

(iii) Conduit installation considerations include the following:

(A) Metallic conduit should have a low-resistance bond of less than .003 ohm to airplane structure.

(B) To prevent wire chafing at the conduit ends, suitable end fittings should be installed so that a smooth surface comes in contact with the wire(s) inside. When fittings are not used, flare the end of the conduit to prevent wire insulation damage.

(C) The conduit should be supported by clamps along the conduit run to prevent chafing against structure and to avoid stressing the end fittings.

b. Lightning Vulnerability (§ 25.954). The auxiliary fuel system installation should be evaluated from the standpoint of lightning vulnerability. Some items and areas that may be susceptible to fuel ignition or indirect effects of lightning include, but are not limited to, the following:

(1) Vent outlets, metal fittings and mechanical fasteners inside fuel tanks, fuel filler caps and access doors, drain plugs, tank skins, fuel transfer lines inside and outside of the tanks, and electrical and electronic fuel system components and wiring.

(2) Advisory Circular 20-53A, Protection of Aircraft Fuel Systems Against Fuel Vapor Ignition Due to Lightning, addresses the subject in more detail.

(3) The primary areas of concern for auxiliary systems are all fuselage penetrations, such as protruding masts, access provisions, vents and drains which can be susceptible to a direct strike or corona effects. Details of all attachments, fittings, etc., must be reviewed to ensure there will be no arcing or sparking and that adequate electrical bonding has been provided. Composites in the basic airplane in areas that involve a portion of the auxiliary fuel system installation should also be evaluated for indirect effects. Indirect effects are induced electromagnetic effects which occur from a lightning strike (such as induced sparking in fuel system components or wiring).

c. Protruding Masts.

(1) Because existing vent and drain masts have been designed to reduce lightning vulnerability, it is recommended that they be used for the auxiliary fuel system also unless such use would compromise their original intended function.

(2) If additional masts or overboard drain lines are required, an evaluation of lightning protection should be conducted.

(3) Access Protection. Access doors or caps should provide isolation of the fuel system components (drains, etc.) with respect to lightning. This isolation should prevent transfer of electrical discharge into the fuel system component(s) and channel or dissipate the energy into airplane structure.

d. Vent and Drain Protection.

(1) Generally, auxiliary fuel tank vent systems are integrated with the existing main fuel tank vent system on the airplane being modified. The main tank vent outlets on transport category airplanes have been designed and certified for lightning protection. Where auxiliary tank venting must be provided separately, it is advisable to consult the type certificate holder to determine a satisfactory vent exit location and configuration. In general, flush outlets are preferable instead of masts. Vent outlets should not be located in a direct (Zone 1) or swept stroke (Zone 2) area of the airplane. The entire fuselage is considered within the Zone 2, swept stroke area. Depending on the particular design, flame arresters may also be required in the vent system proper. Vent system exit design is a critical element of airplane safety and requires a considerable background knowledge of the possible lightning strike zones of the particular airplane being modified.

(2) If secondary barriers are required in passenger/cargo areas, the cavity vents should be designed to the same criteria used for tank vents; i.e., assuming that the effluent is a combustible mixture of fuel and air. Cavity vents should not be combined with or directly ported into any tank vent system. Wherever possible, the cavity venting and draining provisions should be combined as a single function and routed to a single drain mast, preferably an existing main tank cavity drain on the airplane being modified.

(3) Drain valves should be located at or in the lines near the tanks to be drained and not installed on the external surface of the airplane. If tunnels or spaces are required to obtain access to drain valves, the use of nonconductive materials to isolate the valves from possible lightning arc-over or conduction into fuel tanks or fuel carrying components should be considered. Each access configuration should be evaluated for conformance to lightning protection criteria.

e. Bonding for Lightning Protection (§ 25.581).

(1) A minimum of two bonding jumpers should be installed between a conductive tank and the airplane structure.

(2) Individual bonding jumpers should not be less than No. 12 American Wiring Guide (AWG) for stranded copper wire or No. 10 AWG for stranded aluminum wire.

f. Electrostatic Considerations.

(1) The auxiliary fuel system should be evaluated from the standpoint of electrostatic charge build-up. Unless there are means to progressively drain off the charge, electrostatic potential can build up to hazardous levels (sparking discharge levels) in areas of the fuel system where fuel flow velocities are high or where there is a high degree of fuel agitation. Some of the areas of concern are refueling outlets into the fuel tank, and long lengths of refueling or fuel transfer hoses where the hose material is highly nonconductive to electrical currents. (For example, teflon hose was a problem in this respect until the teflon was formulated with a graphite or other materials to make it more conductive.) High electrostatic potential can persist for long periods after build-up in some cases. Explosions have occurred many hours after refueling when personnel introduced objects at ground potential into the bladder cells.

(2) Electrostatic potential build-up can be reduced in tanks by locating fuel outlets near the bottom of the tanks (to reduce splashing and sloshing) and expanding the outlet fitting to reduce the outflow velocity. Electrically bonding the tank fittings to structure will also help by progressively draining off the charge. Sizing hoses and other components to reduce flow velocities will allow more time for charge relaxation. A long run of electrically nonconductive hose can be broken up using metal fittings or lengths of metal tubing, each grounded to structure, to provide additional area for charge relaxation.

(3) The internal tank coatings can influence the degree of fuel electrostatic charge relaxation. The use of dielectric primer, corrosion protective coatings and painting on internal tank walls should be consistent with the desired overall fuel tank wall conductivity.

g. Component Isolation.

(1) Components located in a fuel or a fuel vapor environment must be designed such that there is no fire or explosion hazard during normal operation or under a failure condition. This should be accomplished by ensuring that the component surfaces will never exceed the minimum surface ignition temperature of the fuel used and that there will be no sparking that could cause ignition.

(2) The designer should refer to AC 25.981-1A, Guidelines for Substantiating Compliance with the Fuel Tank Temperature Requirements.

Advisory Circular 25.981-1A discusses the requirements and some of the possible failure situations which can lead to unsafe temperature conditions.

h. Maximum Surface Temperatures.

(1) There is a general industry/FAA practice that a temperature providing a safe margin under all normal or failure conditions is at least 50° F. below the lowest expected auto ignition temperature of the fuel. The auto ignition temperature of fuels will vary because of a variety of factors (ambient pressure, dwell time, fuel type, etc) but the value generally accepted without further substantiation for kerosene type fuels, under static sea level conditions, is 450° F. This results in a maximum surface temperature of approximately 400° F. for an affected component.

(2) In general, component manufacturers have conducted qualification tests to certify that their products will meet the above criteria for known conditions of operation or failure. The auxiliary fuel system installer should ensure that the surface temperature requirements are not exceeded by any component used in the system for any conditions including extended life service and maintenance required on the component. New components should be tested to the above criteria unless such tests have already been conducted by the component manufacturer. In assessing the failure mode conditions of the component, the designer should assess any single failure in combination with an undetectable failure. Failure mode analysis is discussed in Chapter 4, paragraph 12a(1) of this AC.

i. Spark Isolation (Explosion Proofing).

(1) Generally, electrical component manufactures have demonstrated spark isolation or explosion proofing by test where a high intensity spark is intentionally set-off inside the component case with the component immersed in a flammable fuel-air mixture environment. This environment is then ignited to prove its flammability. A test of this type does not depend on the failure mode since the cause of the spark is not important in this situation. However, a failure mode analysis should be conducted to ensure that the test is adequate and will simulate all the actual conditions anticipated in service. For the particular auxiliary fuel system application intended, service life characteristics (such as the degradation of seals with time, etc.) should also be considered to ensure adequate explosion proofing.

(2) For some components, such as fuel quantity probes, safe surface temperatures and explosion proofing can be shown by demonstrating that the circuit energy is less than 0.2 millijoule under normal or any failed condition. Such components are then considered as intrinsically safe with no further substantiation.

Figure 2

AN EXAMPLE OF SHROUDING OF EQUIPMENT ITEMS

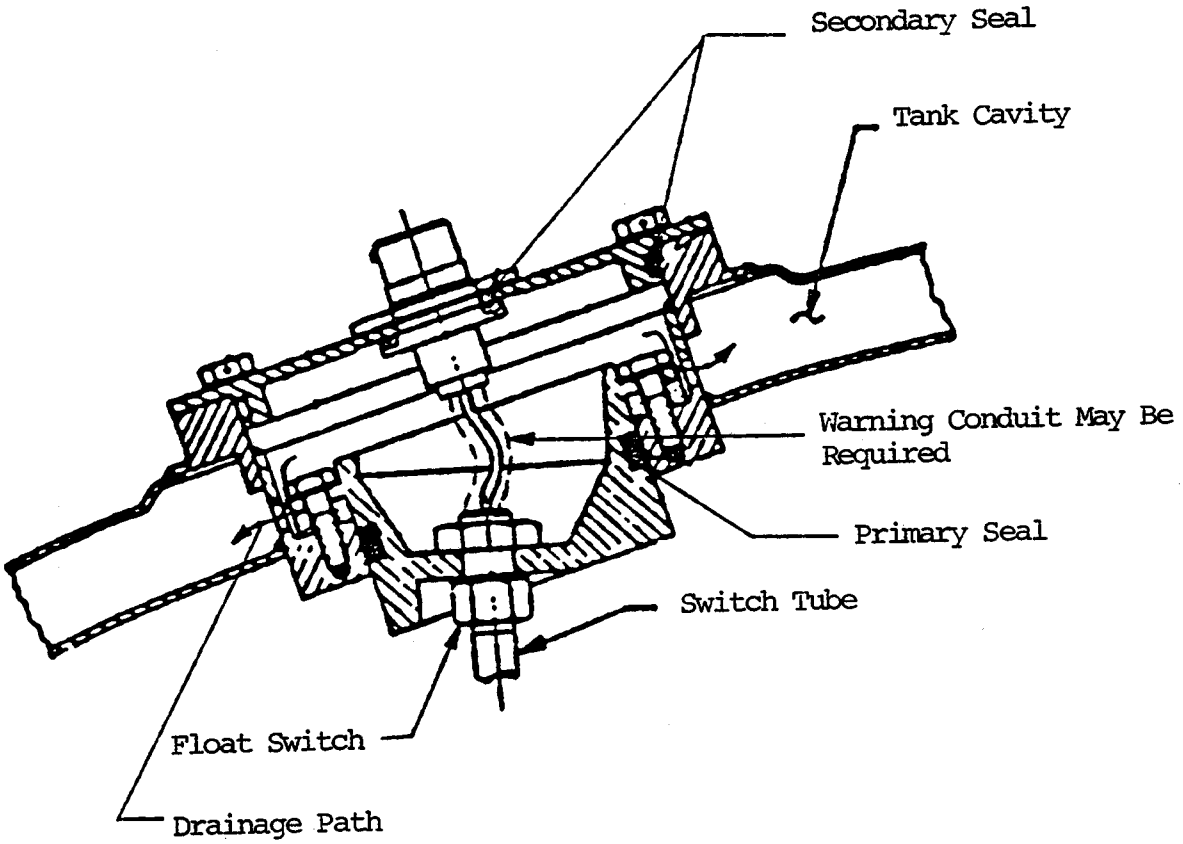

Figure 3

AN EXAMPLE OF INSTALLATION OF ITEMS ON TANK WALLS

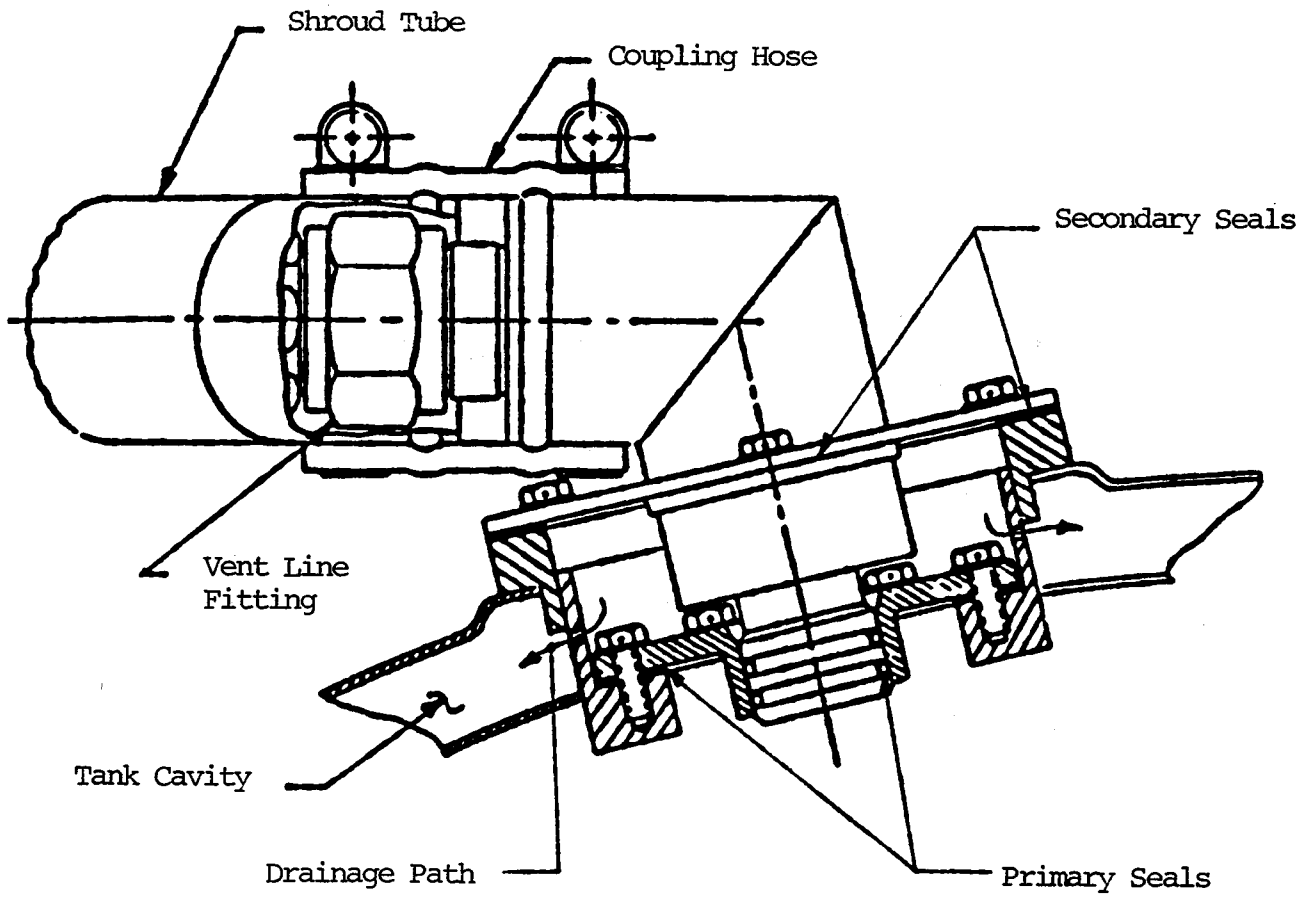

Figure 4

AN EXAMPLE OF SHROUDING OF FUEL OR VENT LINE

FITTINGS IN PASSENGER OR CARGO COMPARTMENTS

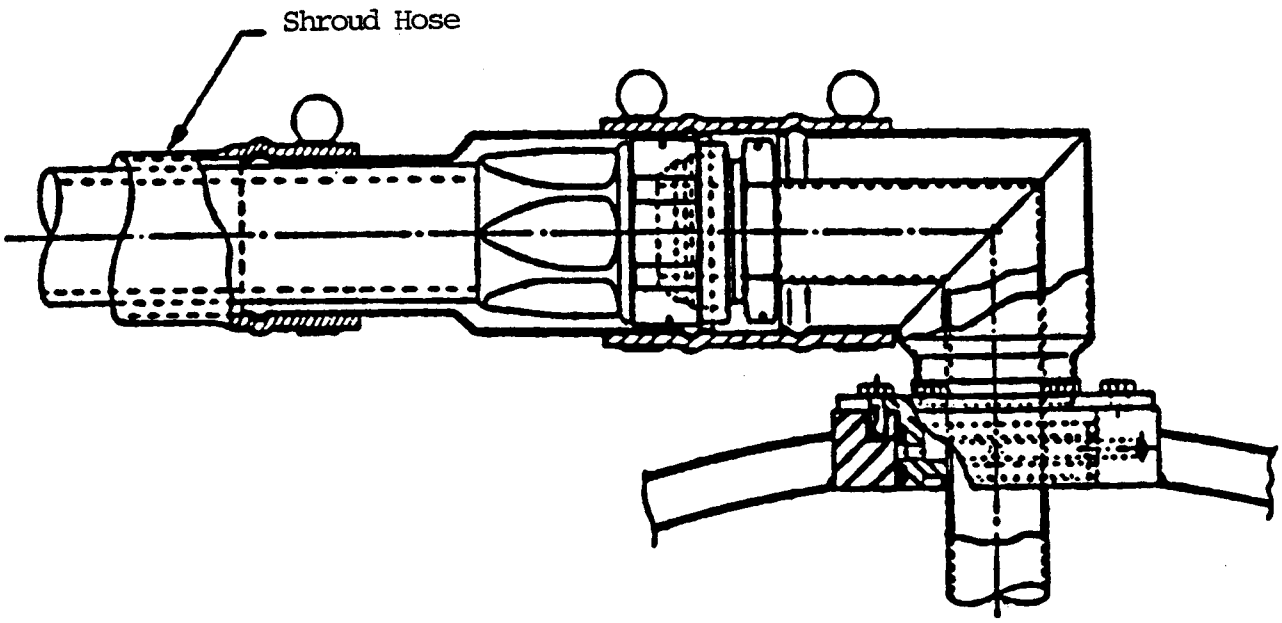

CHAPTER 3 - COMPONENT MATERIALS

7. GENERAL. The applicant is responsible for ensuring the integrity of all materials used in the system. This Chapter describes the material characteristics which have been found important in auxiliary fuel systems. Information and documents concerning material properties and environmental testing requirements can be obtained by contacting the American Society for Testing and Materials (ASTM).

8. ENVIRONMENTAL PROPERTIES EVALUATION.

a. Normal Environment Properties.

(1) Fuel Resistance. Fuel resistance deficiencies have produced problems in the past.

(i) One problem is the presence of fuel or fuel vapor in air pressurizing systems for auxiliary fuel tanks. Pressurizing components which normally are exposed to air will also, during normal static conditions, be exposed to fuel vapor, especially when the airplane is exposed to solar heating while parked for some period of time. Expansion and vaporization of fuel in the tanks can cause vapor migration through a part of the pressurizing system. A failure of a pressurizing system component can also inadvertently cause exposure to fuel. Seals and diaphragms in components which make up this system should be fuel resistant.

(ii) Another aspect which should be evaluated is the prolonged effects of fuel exposure. Some materials, certain plastics in particular, which exhibit short term fuel resistance have, over a prolonged period, deteriorated under the influence of fuel or fuel vapor.

(iii) New innovative material applications, such as composites, and new bonding adhesives should be thoroughly tested to determine the long term effects of fuel and fuel vapor exposure. The use of composite materials is discussed in more detail in Chapter 3, paragraph 9 of this AC. Surface treatments, coatings and sealants intended to reduce weathering and corrosion and seal structural areas should also be substantiated to ensure fuel and fuel vapor resistance, where applicable.

(iv) If a component is life limited, the limits due to fuel environmental conditions should be defined, particularly for nonmetallic items.

(2) Fuel Additive Compatibility. An evaluation should be made of the effects of additives, approved for the airplane, on the components of the auxiliary fuel system. The applicant should substantiate, by suitable methods, that the use of approved additives will not deteriorate these components or restrict the use of specific additives by suitable warning placards on the airplane and notices in the limitations section of the AFM.

(3) Ozone Resistance. High concentrations of ozone may be encountered by airplanes at cruise altitudes. Some materials, particularly certain rubber and plastic compounds, are susceptible to ozone deterioration and should not be used in auxiliary fuel systems. In some cases the combined ozone and fuel environment can produce rapid weathering and disintegration of the material. The effects of ozone should be evaluated with respect to the particular auxiliary fuel system design in question. Ozone compatibility should be substantiated using approved methods and specifications.

(4) Corrosion and Micro-Organism Resistance. Corrosion in auxiliary fuel systems is primarily due to entrained water in the fuel and the acids produced by the associated microbial contamination. Thus corrosion protection is especially important for tanks, sumps and equipment located in sump areas. Metal tanks and components should be made of materials resistant to corrosion or otherwise suitably protected. Metal combinations (dissimilar materials) which are subject to electrolytic corrosion problems should be avoided. Magnesium, copper, cadmium, and brass should not be used in auxiliary fuel systems as these metals are very active chemically. The combination of graphite layers of composite construction attached directly to aluminum will result in intergranular corrosion and should be avoided. Materials used for bladder cells, seals and composite tanks and fittings should be resistant to microbial contamination. Bladder cells must conform to Technical Standard Order (TSO) C80 or otherwise be shown suitable for the intended application.

(5) Temperature Range Suitability. Materials and components used in the auxiliary fuel system must have suitable properties and must perform their intended function throughout the approved airplane operating envelope. In some instances, they may be exposed to temperatures as low as -65° F. or lower and as high as 250° F., or even higher. Some rubber and plastic materials, for example, have excellent flexure properties at room temperature, but become unacceptably brittle at low temperatures.

b. Extreme Environment Properties. Extreme environment properties are those properties a material or combination of materials should have under certain conditions which are not encountered during the routine operating life of the materials. Examples are conditions which may be imposed by component failure or crash environments. An evaluation of the extreme environment properties should account for the following:

(1) Flexibility and Resilience. The properties of flexibility and resilience must to a certain degree be considered as a part of the normal environmental condition for flexible liners, flex connections and other components; however, these properties become of critical importance under crash conditions. Flexure and resilience must be considered to ensure fuel containment under these conditions. It may be necessary to demonstrate by test that certain fuel lines and shrouds are sufficiently resilient or ductile to withstand survivable crash load impact without fuel leakage. Materials and parts for rubber fuel lines should provide resilience and flexibility and conform to TSO-C53 or otherwise be shown suitable for the intended application.

(2) Heat-Strength Characteristics. The high temperature strength properties of materials used in the auxiliary fuel system should be considered for those components which may be subjected to sources of heat due to the failure of some component in another adjacent compartment or adjacent system. In addition, these configurations should be capable of sustaining the critical flight and landing loads and thus the integrity of the system under these conditions.

(3) Fire Resistance and Crash Fire Propagation Characteristics. Auxiliary fuel systems are frequently installed in cargo compartments. By definition, if the tank and component secondary barriers are capable of withstanding a cargo compartment fire such that the safety of the airplane is maintained then the secondary barrier materials are acceptable. These fire resistant characteristics should be equivalent to the liner materials of the compartment in which they are located. For Class B through Class E cargo or baggage compartments the materials must, at least, meet the requirements of §§ 25.853(b) and 25.855(a-1). The system should also be evaluated with respect to materials from the standpoint of toxic gas release under fire conditions. No materials should be used which act as a fuel for fires. Avoid the use of magnesium or flammable resins, sealants and coatings.

9. COMPOSITES (§§ 25.601, 25.603, 25.609, 25.613, 25.615, 25.619, 25.571, 25.581). The suitability and durability of materials used for nonmetallic auxiliary fuel tanks must be established by tests. Advisory Circular 20-107, Composite Aircraft Structure, should be reviewed for applicability when composite materials are used. The following elements should be considered in establishing material properties and substantiating the nonmetallic auxiliary fuel tank structure by tests:

a. Aging of the laminate in the operating environment, including wear, due to temperature, pressure, cavitation, moisture content changes, etc.

b. Chemical reactions with fuel vapor, cleaning liquids, solvents, salt water vapor and any other contaminates such as fungus in the tank.

c. Static electrical charge, bonding or lightning strike.

d. Any other elements characteristic of or unique to the type of nonmetallic material, method of processing and design applications.

e. A manufacturing process to ensure repeatability of material properties.

f. Inspection techniques for manufacturing and for continued airworthiness.

g. Statistically based material strength properties for critical tank structure. Strength, detail design and fabrication must minimize the

probability of fatigue failure. Chapter 9 of MIL-HDBK-5D, Metallic Materials and Elements for Aerospace Vehicle Structures, and MIL-HDBK-17, Plastics for Flight Vehicles, contain procedures for establishing such properties.

h. Composite repair procedures defined by the applicant and approved by the FAA.

CHAPTER 4 - AUXILIARY FUEL SYSTEM PERFORMANCE

10. GENERAL. The designer should evaluate the auxiliary fuel system performance for all normal operating conditions of the airplane. This will, as a minimum, require a FAA witnessed functional ground and flight test program. Some of the performance criteria discussed in this section can be sufficiently evaluated by analytical methods, and substantiation reports submitted to the applicable FAA aircraft certification office for approval. As noted earlier, installations that involve changes in primary structure, aerodynamics, or mass distribution may require additional extensive substantiation that is beyond the scope of this AC. The following criteria should be considered by the applicant in generating test plans and substantiation reports for certification of the system.

11. NORMAL OPERATION EVALUATION.

a. Refueling and Transfer Performance.

(1) Refueling and Transfer Flow Rates and Pressures (§§ 25.951, 25.955, 25.957, 25.961, 25.991 and 25.979).

(i) The auxiliary refueling system should be analyzed to determine that the flow rates and pressures are acceptable. Fueling flow rates should also be demonstrated and verified by ground tests. The tank vent system capacity should be verified for the required operations and to ensure that over pressurization of the tanks, including the existing airplane main tanks when applicable, does not occur. Verification is also required that the pressure fueling automatic shutoff means does not produce unacceptable surge pressures which may damage the system or fueling equipment or rupture fueling lines. This verification can be accomplished by ground or laboratory refueling tests using fast response pressure transducers and recorders or submittal of previously accepted similar tests and service history data.

(ii) Transfer rates should be determined for all flight conditions in which transfer will be permitted to ensure that the receiving tank will be neither overfilled nor depleted before transfer is completed. It should be shown that transfer does not present any hazard, such as unwanted fuel migration, during such flight conditions. Any restrictions on transfer, such as duration or flight operating condition, must be outlined in the limitations section of the AFM. It should be assumed that the transfer system might be left on inadvertently; therefore, it should also be shown that transfer under conditions not permitted by the AFM would not present any hazard.

(iii) Compliance with the hot weather operational performance requirements of § 25.961 must be shown for auxiliary feed systems that feed directly to the engine. This is normally accomplished by conducting a hot fuel test; however, it may, in some instances, be sufficient to show that the system is similar to a previously approved system or to submit an analysis that is supplemented with component test data.

(iv) For auxiliary fuel systems that depend on bleed air for fuel transfer the airplane engine is, in effect, a transfer pump, and fail-safe requirements for pump transfer apply. This means that there must be an alternate means of providing fuel transfer in event of an engine inflight shutdown in accordance with § 25.901(c). This is usually provided by extracting bleed air for auxiliary tank transfer downstream of the pneumatic cross-over point. It is suggested that the applicant consult the airplane type certificate holder concerning the proper location of bleed air extraction points.

(2) Fuel Tank Capacities (Usable Fuel, Sump Capacity, Undrainable Fuel, and Expansion Space) (§§ 25.959, 25.969, and 25.971).

(i) For direct feed auxiliary fuel systems, the unusable fuel requirements of § 25.959, apply. For transfer type auxiliary fuel systems, the unusable fuel is the quantity of fuel remaining after transfer under the most critical steady state airplane flight attitude and altitude conditions permitted by the AFM.

(ii) Sump capacity is a part of the unusable fuel and as previously noted, is defined by § 25.971(a).

(iii) The undrainable fuel quantity should be measured, usually during the initial filling of the auxiliary tanks as a part of FAA witnessed ground tests. The undrainable fuel quantity is the fuel remaining in the system after all fuel possible has been sump drained from the system. It is not usually necessary to completely fill the tanks to determine the undrainable fuel, as the undrainable fuel is fuel trapped between stringers, at low points in fuel fittings, etc. Usually measuring the quantity of fuel necessary to fill all trapping cavities in the system is all that is necessary.

(iv) The maximum tank fueling capacity must take into consideration the expansion space requirements of § 25.969, Fuel Tank Expansion Space. The expansion space volume is the space available for fuel thermal expansion within the tank itself and does not include vent line volume. Basically, the expansion space is the volume from the tank full level to the level where fuel will just begin to enter the vent line.

(v) Figure 5 shows how the expansion space would be defined for three different vent configurations. The expansion space volume must be subtracted from the total volume of fuel at the level at which fuel will just begin to enter the vent line, and does not include the "compression" space above the vent opening. The expansion space should be derived for the airplane in its normal ground attitude. Expansion space capacity is verified during the airplane ground fueling tests conducted as a part of the test program.

(vi) Ground and flight tests of the installed system must be conducted in accordance with § 25.979 with the airplane in the correct ground and flight attitudes to verify that the expansion space requirements are

maintained for pressure fueling to the maximum automatic fuel shutoff level, verify tank(s) pressures during failure of the auto shutoff and also provide the correct values for usable and unusable system fuel.

(3) Pressure Relief (Water Hammer and Thermal Expansion) (§§ 25.995 and 25.1189(h)). The designer should evaluate the pressure fueling and transfer or direct feed system operation to ensure that no damaging fuel line pressures will occur during flow shutoff or due to thermal expansion effects. Normally, sufficient flex line length and the use of "slow" shutoff valves or valves with thermal relief features will negate this problem. In some cases relief valves or other means may need to be incorporated in the system.

(4) Vent System Anti-Siphoning (§ 25.975). The auxiliary tank vent system should be arranged so that no hazardous quantities of fuel can migrate from one tank to another tank or discharged overboard during any normal flight attitudes.

b. Operating Limits (§§ 25.1503 through 25.1533). Assuming that the airspeed, c.g., maximum takeoff weight and maximum landing weight limitations will not be changed as a result of the auxiliary fuel system installation, the applicant's alternatives will be tradeoffs between payload weight and auxiliary fuel system weight at maximum capacity loading. Using these criteria, the applicant should review the requirements of Part 25 Subpart G, Operating Limitations and Information, to ensure that the auxiliary fuel system design does not degrade the airplane performance and other requirements stated in this subpart. If the c.g., airspeed, maximum takeoff or landing weight limits are increased, recertification efforts beyond the scope of this AC will be required.

(1) Operating Airplane Flight Envelope. The installation of the auxiliary fuel system should not restrict the operating flight envelope of the airplane, or a major recertification effort may be required. This does not mean that the auxiliary fuel system must function (transfer fuel) at all existing extremes of the airplane flight envelope. Envelope limitations on the transfer of auxiliary tank fuel must, however, be stated in the AFM. Using the above criteria the applicant should ensure that the auxiliary fuel system will not be adversely affected by exposure to the temperatures, pressures, altitude variation, and flight loads encountered in all regions of the airplane flight envelope. Specific examples of the above are discussed in Chapter 3 of this AC, in particular sections 8a(3) and 8a(5).

(2) System Electrical Power Requirements (§§ 25.1351, 25.1357).

(i) If additional equipment which consumes electrical power is installed in an airplane, the revised total electrical loads should not exceed the generator or alternator output ratings and limits prescribed for the airplane, or the ratings of any airplane bus(es). To ensure that the design meets the criteria, the applicant should provide the following:

(A) Power requirements for each of the equipment items which will be installed.

(B) Wiring diagrams for the equipment installation.

(C) An updated, electrical load analysis for the airplane including the auxiliary fuel system.

(ii) An appropriate circuit protective device (circuit breaker or fuse) should be installed as close as possible to the electrical power-source bus. Good engineering practices for selection of circuit breakers would consider the following:

(A) The minimum rating commercially-available airplane circuit breaker size which will power the normal (i.e. intended) load without nuisance trips, there by minimizing deliverable power to possible fault loads.

(B) Integral three-phase circuit breakers to protect three-phase loads.

(C) The selected circuit protective device must be consistent with the airplane electrical system protection and must protect the smallest wiring in the circuit.

(3) System Pneumatic Requirements (If Applicable) (§§ 25.981 and 25.965). If pneumatic pressure is used to transfer the fuel, it should be demonstrated that safe air supply temperatures and pressures are maintained under all normal and failure conditions of the pneumatic system. Air supply temperature, verified by test, should never exceed a safe margin below the lowest expected autoignition temperature of the fuel during fuel transfer. Safeguards should be provided, such as pressure regulators or relief valves, to ensure that over pressurization of the tanks will not occur in event of a pressure regulation failure in the pneumatic system. Cockpit pressure gauges indicating actual transfer pressure may also be required to ensure correct and adequate pressure levels.

(4) Fuel Quantity System Calibrations and Limitations (§ 25.1337(b)). Part 25 requires that fuel quantity gages read zero when the fuel remaining in the tank is equal to the unusable fuel supply. In this respect fuel quantity systems are calibrated for usable fuel wet, i.e., with a specific fuel of known density to substantiate that the fuel measurement system, as installed in the airplane, indicates zero in a level flight attitude. The applicant may want to increase the unusable fuel to the zero limit of the gage in some cases where the gage can not be calibrated down to the actual unusable tank fuel level, in lieu of replacing the gage. The calibration also encompasses additional readings of the fuel quantity gage which are compared against a standard, usually the readings taken from a fueling system having a calibrated accuracy of 0.5 percent. With the exception of the zero reading, all other calibration errors should be defined so that the acceptability for the particular auxiliary fuel system under review can be determined.

12. FAIL SAFE AND EMERGENCY OPERATION EVALUATION (§§ 25.952 and 25.901(c)). It is the applicant's responsibility, as a part of the certification compliance program, to analyze and submit a report(s) on the auxiliary fuel system component failure modes and consequences of these failures. It must be shown that the resulting consequence of any single detectable failure or combination of undetectable failures will not jeopardize the safety of the airplane. The fail safe criteria as defined in Appendix 1, Definitions, should be used as a guide in all design and failure mode analyses.

a. System Failure Modes.

(1) Component Failure Modes.

(i) The applicant will analyze the effects of malfunction or failure of each piece of equipment installed in the auxiliary fuel system and ensure that no malfunction will result in a hazard to the airplane. The analysis will include the effects of failure for all modes of component failure and all modes of auxiliary fuel system operation, such as, pressure fueling and defueling, fuel transfer or engine feed, and emergency fuel jettisoning. The effects of both detectable and undetectable failures shall be analyzed.

(ii) Wherever possible the configuration should incorporate means to detect component failures in the system. An example of such detecting means is the momentary "on" position detecting circuit incorporated in electric motor operated fuel shutoff valves. Valves with this feature are available as off-the-shelf items.

(2) Component Failure Indication.

(i) As discussed in the previous section, failure indication should be incorporated wherever possible to preclude situations of undetectable failure which can jeopardize airplane safety. Failure indication can be provided in a number of ways. The best from a recognition standpoint is indication which is immediate and draws attention. The momentary "on" position, or in-transit light for a motor operated shutoff valve, a low fuel state warning light, and an audible warning and light indicating fire or overheat are all examples of this type of indication. Continuous monitoring indicators such as pressure gauges, fuel quantity indicators, and temperature gauges can also provide failure indication. However, these devices are not as effective because they rely heavily on human judgment and alertness. Where crew workloads are heavy, such indications may go unnoticed for long periods or until the failure produces a critical flight incident.

(ii) Periodic inspection, such as the preflight inspection for fuel dripping from the auxiliary fuel system shroud drain (indication of fuel system leakage) is an essential function, but does not preclude the chance of failure occurring during long duration flights. Thus, assuming other means of detecting leakage are not incorporated, design precautions (for example,

placing electrical wiring in conduits where it is routed through shroud spaces) may be necessary to preclude the chances that another failure will affect the safety of the airplane.

(3) Special Considerations for Auxiliary Fuel Systems Used for C.G. Control. On occasion, an applicant has elected to offset an airplane's c.g. shift by retaining fuel in an auxiliary tank for use late in the flight profile. Normally, auxiliary system fuel is used after takeoff and early in flight. This allows a somewhat simpler system having reduced redundancy compared to that of the main fuel tank system for the airplane. If the auxiliary fuel system should fail to transfer, the flight can return to the point of departure. However, for an auxiliary fuel system used for c.g. control, as where fuel is consumed late in flight, it may not be possible for the airplane to return to the original point of departure in the event of a fuel transfer malfunction. For this reason the system should have fail-safe transfer capability similar, in part, to the main tank fuel system. The safety of this system must stand on its own merits, i.e., a failure or malfunction of the auxiliary system should not prevent continued safe operation of the engines nor require reliance on the basic airplane's reserve fuel to complete the planned flight. Consideration must be given to the amount of vibration, wing flexure loads transferred to connections, support brackets, locking devices, etc., and the consequences of failure on the ability to maintain critical transfer flow rate. Therefore, the configuration should provide appropriate fail-safe features to assure that auxiliary fuel is always available in the event of a malfunction. Examples of some of the fail safe features which have been incorporated in a c.g. managed system in the past are shown in Figure 6 and include:

(i) Verification that in event of a significant failure of a feed line, the shroud would act as a redundant line to transfer the required fuel.

(ii) Incorporation of dual transfer pumps, line check valves and additional line support brackets. The added brackets ensured that if the feed line couplings inside the tank failed and separated, sufficient line alignment was maintained to ensure the fuel transfer. The added braces restricted both longitudinal and lateral line movement in event of coupling separation.

(iii) A fuel transfer verification check procedure incorporated in the AFM. This check procedure required that a sufficient quantity of fuel be tranferred early in flight to ensure that the system was functioning properly.

b. Operating Limits (§ 25.1351(d)).

(1) Emergency Electric Power Requirements. Generally there are no auxiliary fuel system electrical components which are required to be on the airplane essential bus circuits. There are however two exceptions which the designer should consider carefully:

(i) Direct engine feed auxiliary systems where the loss of pump electrical power could create an unsafe operating condition, such as an engine flame-out.

(ii) Direct engine feed or transfer auxiliary systems where fuel management is required to maintain proper airplane c.g. control (such as, fuel used late in the flight).

(iii) If, in either of these cases, fail-safe features are used which require the need for emergency electrical power, these needs should be assessed to ensure that sufficient power is available from the airplane essential power system. (See also Chapter 4, paragraph 11b(2).)

(2) Fuel Jettisoning (§ 25.1001).

(i) If the applicant uses a trade-off between auxiliary fuel system weight at maximum fuel capacity and payload weight (and thus there is no change in the airplane maximum takeoff and landing weights) the fuel jettisoning requirements of the airplane will be the same as for the original, unmodified airplane. There will therefore be no need to jettison auxiliary tank fuel. Addition of fuel capacity which increases the maximum take-off weight of the airplane would require recertification efforts which are beyond the scope of this AC. One of these efforts would, however, be to evaluate the need of auxiliary fuel jettisoning.

(ii) Regardless of the need for auxiliary fuel jettisoning, the applicant should ensure by failure mode analysis or demonstration, that main tank fuel jettisoning can still be accomplished without hazard to the modified airplane (see also the discussion in Chapter 1, paragraph 3b).

Figure 5

EXAMPLES OF EXPANSION SPACE DEFINITION

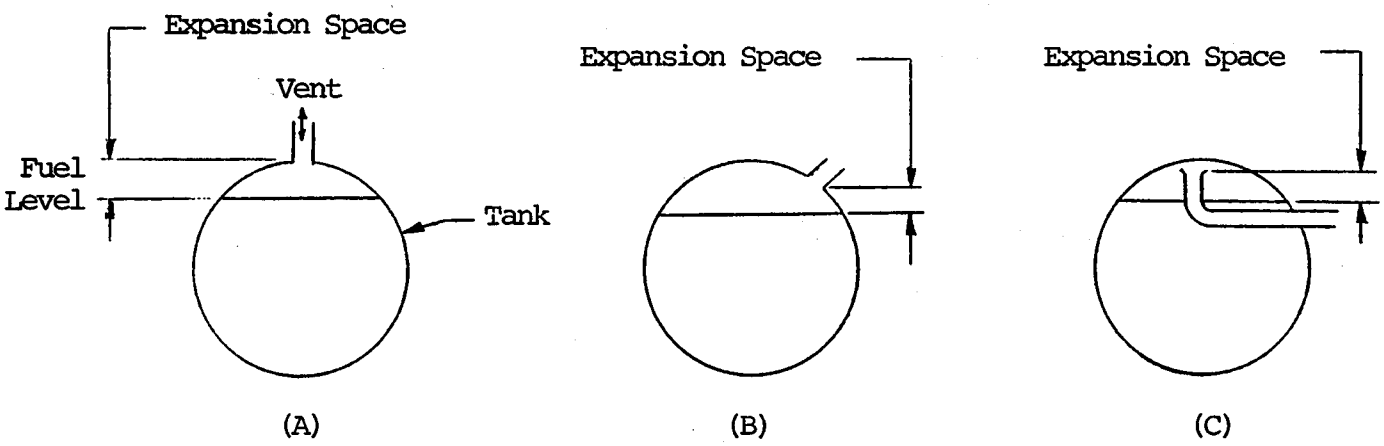

Figure 6

AN EXAMPLE OF AN AUXILIARY FUEL SYSTEM USED FOR C.G. CONTROL

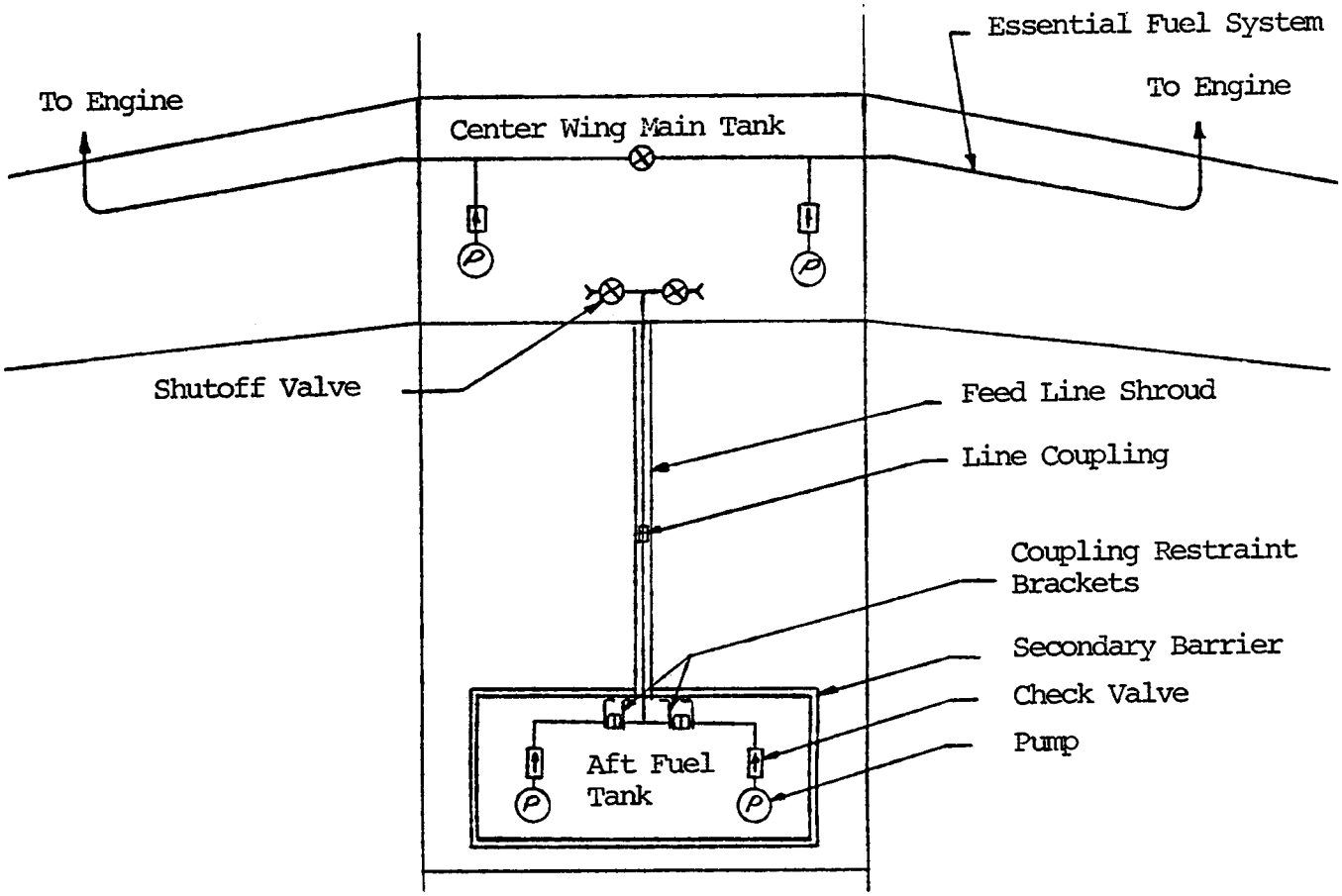

CHAPTER 5 - IMPACT OF SYSTEM ON AIRPLANE OPERATION AND PERFORMANCE.

13. ENGINE OIL SYSTEM CAPACITY (§ 25.1011). The applicant should ensure that the additional fuel capacity of the auxiliary fuel system, thus the added flight duration, does not cause depletion of the engine oil supply under maximum oil consumption conditions and engine out operation. Adequacy of the engine oil capacity must be shown as a part of the compliance for certification of the auxiliary fuel system.

14. MAIN FUEL SYSTEM CAPACITY AND FLOW REGULATION. The applicant should show that there is no condition in which a receiving tank could be over filled from the auxiliary tank fuel. If necessary, means should be provided in tanks supplied with auxiliary fuel to regulate the fuel level in those tanks. Also, there should be no condition in which a receiving tank could be depleted during auxiliary tank transfer. In some cases, auxiliary tank fuel transfer cannot be initiated until the receiving tank fuel has been used down to a certain quantity. This limitation must be clearly stated in the AFM. The applicant must include in the AFM all limitations on the use of auxiliary tank fuel and any warnings necessary in the operation of the system. Limitations and procedures should be evaluated with regard to practicality and pilot workload.

15. RADIO FREQUENCY INTERFERENCE. The applicant should ensure that the system will not cause objectionable radio frequency interference and not be adversely affected by radio frequency interference from other airplane systems.

16. AIRPLANE CENTER OF GRAVITY CONTROL.

a. Since auxiliary fuel tanks are usually installed after initial certification of the airplane and are not part of the basic fuel system, the weight and location of the installation may introduce complex procedures in c.g. control. Several modes of auxiliary fuel transfer may be used, requiring c.g. control for each. If a failure can trap fuel in an auxiliary fuel system, there must be a means provided to feed the engines and stay within the c.g. limits for the remainder of the flight (to reach the airport of destination or an alternate airport). Instructions necessary to maintain the airplane within the established c.g. limits are required by the operating regulations and by § 25.1583(c).

b. An auxiliary fuel system installed aft of the main gear may affect the airplane ground handling operations. Especially for airplanes which have not normally been ground handling limit critical, special cautions and placards may be required in both cargo and refueling station areas. It may be necessary in some cases to institute refuel sequence controls to prevent tipping of the the airplane. Since removal of interiors or other equipment could also aggravate ground aft c.g. problems, maintenance manual supplements should include appropriate procedures and cautions (see Chapter 6, paragraph 20, also).

c. A means of controlling the center of gravity can be attained by providing c.g. limit charts with associated limits on airplane gross weight, configuration, zero fuel weight, and fuel schedules in the limitations section

of the AFM. In addition, fuel transfer procedures should be provided for all modes of transfer along with instructions for c.g. control if fuel transfer is not available. If the airplane is loaded within the zero fuel limits of the charts and fuel is used per the approved transfer schedules, the airplane should remain within the allowable center of gravity limits. See Appendix 1 for definition of zero fuel weight.

CHAPTER 6 - USER INSTRUCTIONAL REQUIREMENTS.

17. AIRPLANE PLACARDS AND INSTRUMENT MARKING EVALUATION.

a. Location of Placards, Markings, Gauges, Switches, etc. (§ 25.1557(a) and (b)).

(1) Cockpit and fueling station placards, markings, annunciator lights, gauges, switches and controls for the auxiliary fuel system should be located in suitable areas with sufficient illumination to assure they are easily readable during day and night operations. The switches and controls must be easily accessible to the ground or flightcrews as required by the applicable regulations.

(2) Special placards, located in the cargo compartment, or adjacent to the auxiliary fuel tank installation may be necessary to inform or caution the ground crew about certain aspects of the installation. These placards may, for example, state certain cargo compartment loading limits or restrictions, flexible cargo barrier tensioning requirements or cautionary flammable fluid requirements as required. Also suitable markings on the airplane exterior surface are required, identifying drain access doors, masts, etc.

b. Instrument, Instrument Identification, Lighting and Calibration §§ 25.1305, 25.1337, 25.1381, 25.1541, 25.1543, 25.1553, 25.1555 and 25.1583).

(1) A fuel quantity indicator should be installed for each independent auxiliary fuel tank which provides indication to the flightcrew of the quantity,in gallons or equivalent units, of usable fuel in each tank during flight (see also Chapter 4, paragraph 11b(4)). Indicators should be as accurate and compatible with the existing airplane fuel quantity indicators as possible and calibrated using the same units of volume (metric or English).

(2) Instrument and switch markings should be easily readable with instrument lights.

(3) Each instrument, indicator and switch must have markings/placards which permit the crew to easily identify it. Markings and placards shall be displayed in conspicuous places and shall be such that they cannot be easily erased, disfigured or obscured.

(4) If the instrument markings are on the cover glass of the instrument, there must be means to maintain the correct alignment of the glass cover with the face of the dial.

(5) Each fuel tank selector control, if used, must be marked to indicate the position corresponding to each tank.

18. AIRPLANE FLIGHT MANUAL (AFM) (§§ 25.1581 through 25.1587).

a. Auxiliary fuel tanks installed after initial certification of the airplane require an FAA-approved AFM supplement or an appendix to the existing basic AFM to provide appropriate operating information, procedures and limitations. Generally, an appendix to an AFM is appropriate when written by the manufacturer of the basic airplane, and a supplement is appropriate when the applicant for an auxiliary fuel tank installation is other than the manufacturer.

b. The applicant is responsible for preparing the AFM supplement or appendix which will be incorporated into the basic AFM. The operating procedures and limitations will be evaluated by the FAA flight test crew as part of the flight test evaluations prescribed by the Type Inspection Authorization (TIA). Crew workload also will be evaluated to determine whether it is still acceptable with the addition of an auxiliary fuel system. Crew workload should be considered early in the design of the system, with FAA participation, to ensure that all considerations are properly coordinated.

c. Sufficient information and data should be provided in the AFM to assure that the flightcrew will be able to understand and operate the system during normal, abnormal, and emergency operations of the airplane.

d. Abnormal procedures are those that are not normal procedures and also are not emergency procedures. They include procedures for foreseeable failure situations in which the use of special systems, or the use of regular systems, may be expected to maintain an acceptable level of airworthiness. Immediate action is not usually required. Since most auxiliary fuel systems are add-on systems, which are not included in the flight training syllabus of the airplane, the AFM supplement or appendix must be complete in providing the required information. To assure completeness of the AFM supplement (or appendix) the following discussion and format are provided as a guide for the type of information that should be considered.

(1) Limitations.

(i) Weight Limitations. Maximum zero fuel weight changes and weight and center of gravity limits should be specified. It should be emphasized that when fuel is loaded into fuselage auxiliary tanks, the maximum zero fuel weight must be reduced by the weight of the added fuel.

(ii) Fuel Loading Limitations. The maximum allowable fuel in each auxiliary tank should be specified. Loading limitations may be required to maintain weight/c.g. within limits, i.e., certain main fuel tanks may be required to be loaded before the auxiliary tanks and the auxiliary tanks may be required to be loaded in a particular sequence depending on the design of the system.

(iii) Fuel Management Limitations.

(A) Specific fuel usage procedures may be required to maintain the weight and balance of the airplane within limits. Additionally, flight planning limitations may be required if a single failure can trap fuel in the auxiliary fuel system; the main fuel system must still provide sufficient fuel to the engines for the remainder of the flight, i.e., to reach the airport of destination or to an alternate airport.

(B) A specific sequence of transferring auxiliary fuel may be required as a result of fuel flow rates.

(C) If auxiliary fuel is used for ballast, a placard indicating the amount of ballast fuel is required in the cockpit.

(iv) Operating Limitations.

(A) Maneuvering limitations should be specified.

(B) Tank pressurization or transfer of fuel during takeoff and landing are usually prohibited because of the crashworthiness fire hazard.

(C) Transfer of fuel during climb or descent may be prohibited because of usable fuel considerations.

(v) Miscellaneous Limitations. Cargo and floor loading restrictions may be required due to the auxiliary fuel tank installation.

(2) Emergency Procedures.

(i) Ditching. If applicable, procedures must be provided regarding transfer of fuel from auxiliary fuel tanks and placement of controls and switches prior to ditching.

(ii) No Fuel Transfer. Should fuel not transfer and become trapped in the auxiliary tanks, procedures should be included to regain transfer capability. If transfer is still not available, management procedures should specify how to maintain weight/c.g. within limits.

(iii) Engine Inoperative. In the event of an engine failure, auxiliary fuel systems which use engine bleed air for fuel transfer may lose transfer capability. In order to restore transfer, procedures must be included which define the steps required for obtaining bleed air from the remaining operating engine(s). These procedures should also define engine operating restrictions, if required, which apply during transfer following engine-out conditions. Continued use of bleed air for fuel transfer may be affected by the engine-out enroute climb performance requirements of Part 25.

(3) Normal Procedures/Abnormal Procedures.

(i) Fuel Loading. Instructions necessary to enable loading of the airplane within the established limits of weight and center of gravity, and to maintain the loading within these limits in flight must be provided.

(ii) External Preflight Check. Detailed procedures should be specified.

(iii) Cockpit Preflight Check. Detailed procedures should be specified.

(iv) Fuel Management and Transfer Procedures.

(A) Detailed procedures should be specified for each fuel transfer schedule approved and should include normal fuel transfer rates for use.

(B) Flow Check. Procedures to determine that auxiliary fuel transfer is available should be specified, where required.

(C) Fuel Jettison. (If installed). Procedures should be established to dump fuel, if desired, listing airspeed, altitude, and configuration.

(v) Usable Fuel. Maximum usable fuel should be specified.

(vi) Unusable Fuel. The unusable fuel should be specified.

(4) Performance. Any change in airplane performance should be provided. For instance, if engine bleed air is used to pressurize the auxiliary fuel system, its effects should be accounted for.

(5) Auxiliary Fuel System Description. A detailed description and functional arrangement schematic should be provided. This information may be provided in an unapproved section of the AFM supplement (or appendix) or may be included in the approved SECTION 3, NORMAL PROCEDURES. A suggested outline includes the following:

(i) Fuel Transfer System.

(ii) Control Panel.

(iii) Refueling System.

(iv) Electrical System.

(v) Schematics.

19. WEIGHT AND BALANCE MANUAL INFORMATION. Weight and loading distribution information including loading instructions must be presented either in the AFM

supplement or in a separate weight and balance control and loading document which will be referenced in the AFM. Reference § 25.1583(c).

20. MAINTENANCE MANUAL (§ 25.1529). The inspections, tests, repairs and related intervals upon which compliance with the applicable certification basis is based should be included in a maintenance manual supplement supplied by the applicant. The manual should also contain complete servicing information for the auxiliary tanks and systems. If the applicant proposes to have a system where a tank(s) may be removed or made inoperable for maintenance purposes and the remainder of the system remains airworthy (as where more than one tank configuration is an approved configuration) or where the entire system is classified as removable, complete maintenance instructions should also be provided detailing the methods of system modification or removal, resealing and restoring the compartments, and other considerations necessary to make the airplane airworthy. The applicant should refer to Part 25, Appendix H, Instructions for Continued Airworthiness, when providing maintenance instructions.

APPENDIX 1

1. DEFINITIONS. The following definitions are applicable as used in the text of this AC.

a. Auxiliary Fuel System. An auxiliary fuel system is a system installed within the airplane which makes additional fuel available for increasing the flight range of that airplane. The term "auxiliary" means that this system is secondary to and backed by the airplane's essential fuel system, i.e., that the functions of the essential fuel system are immediately available and operative without immediate supervision by the flightcrew in the event of failure or inadvertent depletion of fuel in the auxiliary fuel system (reference § 25.955(b)(2)). In essence, an airplane equipped with an auxiliary fuel system is capable of safe flight even when the auxiliary fuel system is not used, i.e., where its fuel storage capacity is not required for short range flight.

b. Essential Fuel System. An essential fuel system is a system installed within an engine powered airplane which is required for safe operation of the airplane. Its primary function is to provide an independent, uninterrupted flow of fuel to each airplane engine. Essential (or main) fuel tanks are those tanks which normally supply fuel directly to the engine in at least one operating mode and are necessary to satisfy the independent feed requirements of the airplane (reference § 25.953). These tanks also contain the reserve fuel necessary for all flight diversions and other contingenices.

c. Fail-Safe.

(1) The FAA fail-safe design concept is a design methodology where the effect of failures and failure combinations must be considered in defining a safe design. The following basic rules involving failure events apply:

(i) In any system or subsystem a single failure of any element or connection during any one flight (brake release through ground deceleration to stop) must be assumed without consideration as to its probability of failing. This single failure event must not prevent the continued safe flight and landing of the airplane.

(ii) Additional independent failure events during any one flight following the first single failure must also be considered when the probability of occurrence is likely (i.e., those combinations of failures not shown to be extremely improbable). If a critical failure event cannot readily be detected, it must be counted as a latent existing failure in addition to the first failure. The probability of these combined failures includes the probability of occurrence of the first failure event.

(2) The following design principles and techniques are generally utilized to prevent single failures and likely combinations of failures from jeopardizing the continued safe flight and landing of the airplane:

(i) Redundancy or back up systems that provide system function after the first failure, i.e., two or more engines, two or more hydraulic systems, dual flight controls, etc.

(ii) Isolation of systems and components, both physically and functionally, so that failure of one element will not cause failure of the other. This is sometimes referred to as system independence.

(iii) Detection of failures or failure indication.

(iv) Functional verification, i.e., the capability for testing or checking the condition of the components.

(v) Proven reliability and integrity to assure that multiple component or system failures will not occur in the same flight.

(vi) Damage tolerance that limits the safety impact or effect of the failure.

(vii) Designed failure path that controls and directs the failure event by design to limit the safety impact.

(viii) Flightcrew procedures following the failure event designed to assure continued safe flight by specific crew actions.

(3) The FAA fail-safe design concept utilizes all of the above eight design principles in whatever combination is required to produce a fail-safe design. The employment of only one of the above principles is seldom adequate; generally two or more are used in the design to satisfy the fail-safe design concept, i.e., assure that catastrophic failures will be extremely improbable.

d. Fuselage Break Points. Fuselage break points are points along the fuselage where accident data has shown the fuselage shell structure has failed. It can be a partial failure in which the structure across the break remains attached or a complete failure resulting in two separate pieces. These are generally attributable to two types of conditions:

(1) Cutouts and stress concentrations.

(2) Points of maximum load, either point loads by the landing gear or maximum bending moments, such as, at the juncture of the wing and body.

e. Passenger/Cargo Compartments. All compartments specifically designed to provide a suitable life support environment for people and animals during all operating modes of the airplane. These areas may or may not be pressurized.

These areas include, but are not limited to, the cockpit, passenger compartments, galleys, and all classes of cargo and baggage compartments.

f. Zero Fuel Weight. Typically, transport category airplanes are designed to carry the fuel supply in the wings. In addition to any other advantages, locating the fuel in the wings relieves wing bending stresses and allows a higher maximum weight than would be possible with the same quantity of fuel located within the fuselage. For such airplanes, zero fuel weight is established as a limit to ensure that maximum wing bending stresses are not exceeded by replacing fuel in the wings with an equal weight of payload carried in the fuselage. When an auxiliary fuel tank is installed within the fuselage, the existing zero fuel weight limit is no longer directly applicable because the fuel contained in that tank does not relieve wing bending stresses. It is, therefore, necessary to reduce the zero fuel weight limit by the maximum usable fuel capacity of the auxiliary tank. Alternatively, the zero fuel weight limit may be redefined as the maximum zero wing fuel weight limit. Any fuel contained in the auxiliary tank would then be treated as payload from a weight and balance standpoint. Regardless of which procedure is used, the AFM must clearly state the limit and its meaning.

☆ U. S. GOVERNMENT PRINTING OFFICE : 1986 491-828/54716