# ORDER

6000.43

PROJECT IMPLEMENTATION PLAN FOR THE GENERAL NATIONAL AIRSPACE SYSTEM (GNAS) SECTOR MAINTENANCE CONTROL CENTER (GMCC)

August 17, 1992

# DEPARTMENT OF TRANSPORTATION
## FEDERAL AVIATION ADMINISTRATION

**Distribution:** A-W(NA/SM/SE)-3; A-X(AF)-3; A-YZ-2; A-FAF-0 **Initiated By:** ANA-120

# RECORD OF CHANGES

**DIRECTIVE NO.** 6000.43

| CHANGE TO BASIC | SUPPLEMENT | | | OPTIONAL | CHANGE TO BASIC | SUPPLEMENTS | | | OPTIONAL |
|---|---|---|---|---|---|---|---|---|---|
| | | | | | | | | | |
| | | | | | | | | | |
| | | | | | | | | | |
| | | | | | | | | | |
| | | | | | | | | | |
| | | | | | | | | | |
| | | | | | | | | | |
| | | | | | | | | | |
| | | | | | | | | | |
| | | | | | | | | | |
| | | | | | | | | | |
| | | | | | | | | | |
| | | | | | | | | | |
| | | | | | | | | | |
| | | | | | | | | | |
| | | | | | | | | | |
| | | | | | | | | | |
| | | | | | | | | | |
| | | | | | | | | | |
| | | | | | | | | | |
| | | | | | | | | | |
| | | | | | | | | | |
| | | | | | | | | | |
| | | | | | | | | | |
| | | | | | | | | | |
| | | | | | | | | | |
| | | | | | | | | | |
| | | | | | | | | | |
| | | | | | | | | | |
| | | | | | | | | | |
| | | | | | | | | | |
| | | | | | | | | | |
| | | | | | | | | | |
| | | | | | | | | | |
| | | | | | | | | | |

**FAA Form 1320-5** (6-80) USE PREVIOUS EDITION

# FOREWORD

This order directs affected Federal Aviation Administration (FAA) organizations to take the action(s) necessary to implement the General National Airspace System (GNAS) Sector Maintenance Control Center (GMCC). It identifies associated activities, responsibilities, schedules, and funding. Implementation of the GMCC fulfills part of Capital Investment Plan (CIP) Plan Project 26-04, Maintenance Control Center (MCC). Management responsibility for this project has been assigned to the Automation Engineering Division (ANA-100). Support and coordination with other agency organizations is essential for successful implementation of the GMCC project.

Ron L. Lipps
Program Manager for Maintenance Automation

TABLE OF CONTENTS


| | | Page No. |
|---|---|---|
| CHAPTER 1. | GENERAL | 1 |
| 1. | Purpose | 1 |
| 2. | Distribution | 1 |
| 3. | Authority to Change this Order | 1 |
| 4.-19. | Reserved | 1 |
| CHAPTER 2. | PROJECT OVERVIEW | 3 |
| 20. | Synopsis | 3 |
| 21. | Purpose | 3 |
| 22. | History | 3 |
| 23.-29. | Reserved | 4 |
| CHAPTER 3. | PROJECT DESCRIPTION | 5 |
| 30. | Functional Description | 5 |
| | Figure 3-1. GMCC Phased Approach | 6 |
| | Figure 3-2. Remote Maintenance Monitoring System and Subsystems | 7 |
| 31. | Physical Description | 9 |
| | Figure 3-3. GMCC Configuration | 11 |
| | Figure 3-4. Planned GMCC Layout | 15 |
| 32. | System Requirements | 21 |
| 33. | Interfaces | 23 |
| 34.-39. | Reserved | 23 |
| | Figure 3-5. GMCC Physical Interface (Phase I) | 24 |
| | Figure 3-6. Functional GMCC/MPS Interface | 25 |
| CHAPTER 4. | PROJECT SCHEDULE AND STATUS | 27 |
| 40. | Project Schedules and General Status | 27 |
| 41. | Milestone Schedule Summary | 27 |
| 42. | Interdependencies and Sequence | 28 |
| 43.-49. | Reserved | 28 |
| CHAPTER 5. | PROJECT MANAGEMENT | 29 |
| 50. | Project Management, General | 29 |
| 51. | Project Contacts | 31 |
| 52. | Project Coordination | 33 |
| 53. | Project Responsibility Matrix | 34 |
| 54. | Project Management Communications | 34 |
| 55. | Implementation Staffing | 34 |
| | Figure 5-1. Project Responsibility Matrix | 35 |

| | | Page No. |
|---|---|---|
| 56. | Planning and Reports | 36 |
| 57. | Applicable Documents | 36 |
| 58. | Contract Management | 37 |
| 59. | Configuration Management | 37 |
| CHAPTER 6. | PROJECT FUNDING | 41 |
| 60. | Project Funding Status, General | 41 |
| 61. | Regional Requirements | 41 |
| 62.-69. | Reserved | 41 |
| CHAPTER 7. | DEPLOYMENT | 43 |
| 70. | General Deployment Aspects | 43 |
| 71. | Site Preparation | 43 |
| 72. | Delivery | 48 |
| 73. | Installation Plan | 48 |
| 74.-79. | Reserved | 49 |
| CHAPTER 8. | VERIFICATION | 51 |
| 80. | Factory Verification | 51 |
| 81. | Checkout | 51 |
| 82. | Contractor Integration Testing | |
| 83. | Contractor Acceptance Inspection (CAI) | 51 |
| 84. | FAA T&E Site Testing | 51 |
| 85. | FAA OT&E Integration Testing | 51 |
| 86. | OT&E Shakedown and Changeover | 52 |
| 87. | Key Site Testing | 52 |
| 88. | Joint Acceptance Inspection (JAI) | 52 |
| 89. | Reserved | 52 |
| CHAPTER 9. | INTEGRATED LOGISTICS SUPPORT | 53 |
| 90. | Maintenance Concept | 53 |
| 91. | Training | 53 |
| 92. | Support Tools and Test Equipment | 54 |
| 93. | Supply Support | 54 |
| 94. | Vendor Data and Technical Manuals | 54 |
| 95. | Equipment Removal | 55 |
| 96. | Facilities | 55 |
| 97.-99. | Reserved | 55 |
| APPENDIX 1. | REGIONAL MAP COORDINATORS | 1 |
| APPENDIX 2. | LIST OF ABBREVIATIONS AND ACRONYMS | 1 |

# CHAPTER 1. GENERAL

1. PURPOSE. This order establishes procedures for identifying the activities, schedules, and available or required funding for implementing the General National Airspace System (GNAS) Sector Maintenance Control Center (GMCC). The purpose of the GMCC project (Capital Investment Plan Project 26-04) is to deploy GMCC processors, displays, facilities, and equipment to GNAS sector offices.

2. DISTRIBUTION. This order is distributed to branch level in the office of the Program Director for Automation, the Systems Maintenance and NAS Systems Engineering Services; branch level in the regional Airway Facilities (AF) divisions; division level at the Mike Monroney Aeronautical Center and FAA Technical Center; and to all AF sector offices.

3. AUTHORITY TO CHANGE THIS ORDER. The Program Manager for Maintenance Automation, ANA-200, has the authority to change this order.

4.-19. RESERVED.

# CHAPTER 2. PROJECT OVERVIEW

20. SYNOPSIS. Implementation of the FAA's Remote Maintenance Monitoring System (RMMS) is central to the plans for modernizing maintenance operations. The GMCC provides a centralized maintenance operations management capability for facilities within the GNAS sector jurisdiction. GMCC project development and implementation will proceed without the use of a prime contractor. A three-phased implementation approach is being used to support the early deployment of equipment. The first phase established the GMCC physical environment with dedicated terminal and dial-up capabilities to the Maintenance Processor Subsystem (MPS) via the existing Statistical Multiplexer (STAT MUX) on the Data Multiplexing Network (DMN). The second phase will complete the delivery of hardware and software providing network access to the MPS. The third phase will provide a geographic software enhancement to the tabular status display.

21. PURPOSE. GMCC personnel will use GMCC processors, displays, facilities, and equipment to interface with and control the RMMS subsystems within specific geographical boundaries. MCC operation will also be achieved using a three-phased implementation approach. Procurement and installation of these items at GMCC locations will enable sectors to implement MCC centralized maintenance operations management and to interface with and use the capabilities of the evolving RMMS. Completion of this effort supports the transition phase as described in Order 6000.39, Maintenance Control Center (MCC) Operations Concept, dated August 8, 1991.

22. HISTORY. Phased deployment of the RMMS subsystem has continued since 1981 as part of what was originally National Airspace System Plan Project 6-01. The MPS hosting the Maintenance Management System (MMS) software and Interim Monitor and Control Software (IMCS) provides capabilities to perform remote monitoring and control and also processes data needed for certification of NAS facilities having Remote Monitoring Subsystems (RMS). As part of what was originally NAS Plan Project 6-04, lead sectors and prototype GMCC sites demonstrated procedures and requirements for the GMCC to become a focal point for using maintenance automation capabilities at the GNAS level. Refer to NAS-MD-794, Functions and Operational Requirements of the NAS Maintenance Control Center, dated March 15, 1986, and FAA-E-2875, GMCC System Specification, dated December 18, 1990, for a full description of MCC requirements. The MCC requirements are

also baselined in the NAS System Specification (NAS-SS-1000) dated December 10, 1991. Using NAS-MD-794 requirements as the evaluation criteria, the two prototype sites surveyed indicated that the requirements could be met using a local area network (LAN) configuration. Major hardware requirements, including support for a LAN, will be met using the AT&T Office Automation Technology and Services (OATS) contract. In addition, the existing Tandem contract has been amended to include a Tandem MultiLAN interface with the AT&T LAN (StarLAN) connection.

23.-29. RESERVED.

# CHAPTER 3. PROJECT DESCRIPTION

30. FUNCTIONAL DESCRIPTION. The GMCC equipment will enable sectors to use RMMS and automation capabilities to perform monitoring, control, restoration, certification, and automated maintenance management/facility performance reporting activities on selected facilities and equipment. The GMCC will provide communications for maintenance notification and emergency coordination. The functional capabilities of GMCC hardware will change as the three phases of implementation are completed as shown in figure 3-1. The first phase delivered equipment to designated work centers to enable maintenance specialists using dedicated terminal and dial-up capabilities to access MMS software on the MPS and perform automated logging and interruption reporting. It also enabled maintenance specialists to access IMCS to achieve performance monitoring, control, and certification of NAS facilities/equipment. The second phase will deploy local area networking capabilities to both GNAS and Air Route Traffic Control Center (ARTCC) locations to establish LAN connectivity to the MPS, status display, data distribution, and storage capabilities. The third phase will consist of software enhancements to provide geographical display capabilities. The functional relationship of the GMCC to the RMMS is shown in figure 3-2. The following RMMS capabilities, including maintenance management and facility monitoring, control, restoration, and certification, will be supported through the implementation of the GMCC as part of the RMMS:

a. Maintenance Management Capabilities. Logging and maintenance management capabilities resident on the MPS MMS software provide the GMCC with a standardized access to historical data. Historical data is associated with the deployed RMS's and necessary data bases for maintenance and operations of facilities and equipment that comprise the NAS. GMCC's will access the MPS/MMS capabilities using Tandem 6530 emulation software.

b. Monitoring/Control/Restoration/Certification. Real-time monitoring and control of facilities under the GMCC jurisdiction is displayed to enable the GMCC personnel to maintain, certify, manage, control, and restore RMM equipped facilities. The GMCC Facility Status Display provides information about the facilities within the GNAS sector maintenance jurisdiction. Color-coded facility identifiers designate facility operational status. Hardware peripherals and software utilities assist the operator in status update

FIGURE 3-1. GMCC PHASED APPROACH

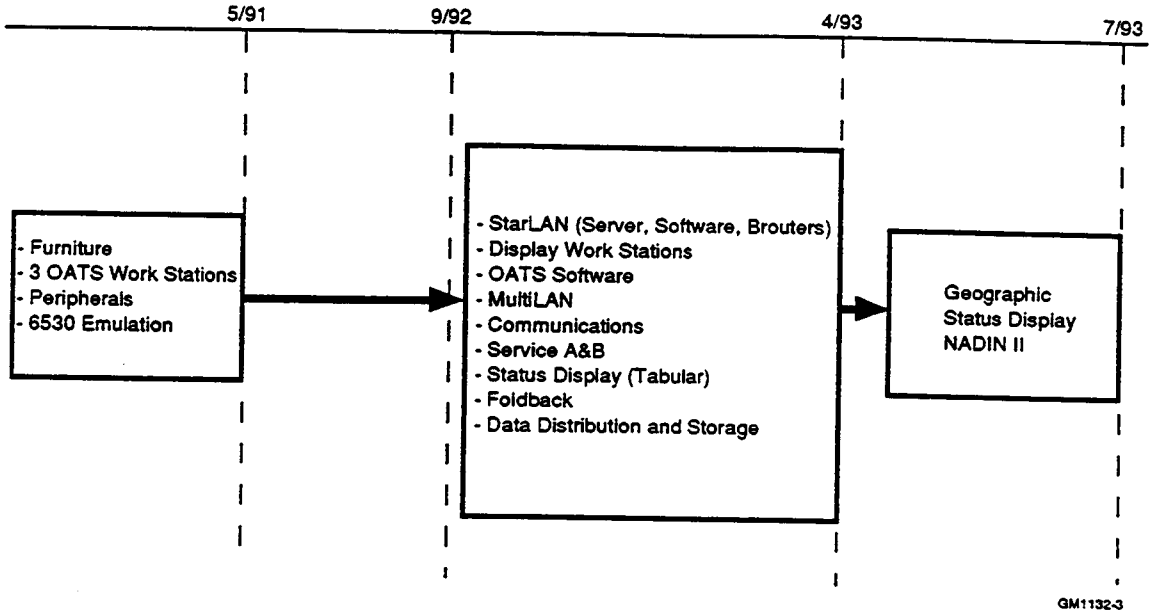

FIGURE 3-2. REMOTE MAINTENANCE MONITORING SYSTEM AND SUBSYSTEMS

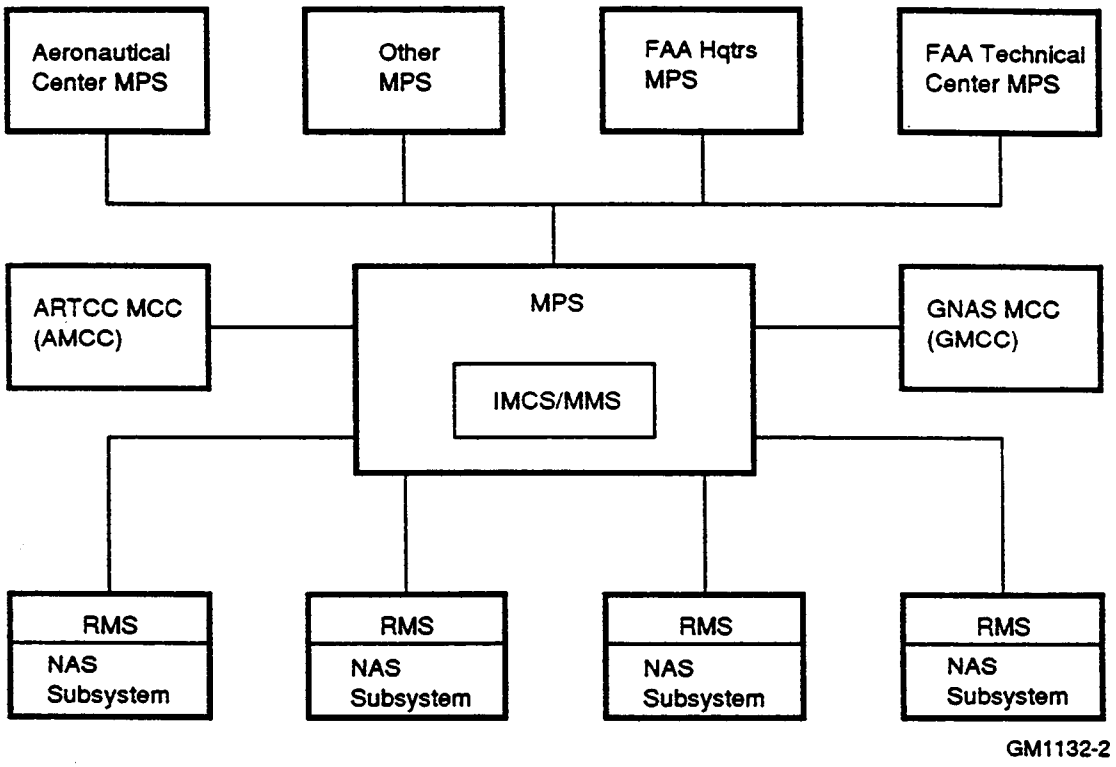

and edit functions. Textual presentations of maintenance activities and site-peculiar operations data, when available, are displayed. Menu selection capabilities will be provided. Dial-up access to commercial radar weather information will be used.

c. GMCC Communications/Coordination. Voice communications via telephone and radio enable the GMCC to function as the focal point for GNAS sector maintenance operations and management. The MCC specialist must be able to routinely reach all contact points in an expeditious and reliable manner. The following will comprise the GMCC communications capabilities:

(1) The GMCC telephone system will be compatible with the existing systems installed at the facility locations, and will support auto dialing (software control is an option), multi-line access, speaker phone operation, and built-in dialing capabilities.

(2) Voice and data telephone lines will provide GMCC communications capabilities with the various organizational elements and contacts involved in its operational area. A minimum of two voice-grade lines and one 19.2 Kbps data-grade line are required to support the GMCC. (This requirement supersedes GMCC Site Preparation Information Package dated November 16, 1990.)

(3) Frequency Modulation (FM) National Radio Communications System (NARACS) will provide an alternate radio communications method to coordinate maintenance of NAS facilities.

(4) Single sideband/high frequency (SSB/HF) emergency equipment deployed within GNAS sectors will be used by the GMCC for emergency operations coordination.

(5) Scanners used in the GMCC will be multi-band, listen-only voice communications that monitor assigned FM channels, police, civil defense, and aircraft and weather bands. These will assist GMCC personnel in the direction of maintenance personnel in both routine and emergency situations.

(6) Telecommunications equipment provides the GMCC with data communications capabilities to directly access the MPS. 19.2 Kbps data communications equipment (DCE) will be utilized to provide communications connectivity between sites. The DMN capabilities will be utilized to include a 56

Kbps digital communications platform when available. Dial-up capabilities will be made using a GMCC work station with an internally mounted 2400 bps modem and existing commercial phone lines. Dial-up access to Leased Service A/B (LABS) will provide the GMCC specialist with Notice to Airmen (NOTAM), General Notices (GENOT), Regional Notices (RENOT), Surface Area (SA), advisory information, and other commercial vendor products. National Data Interchange Network (NADIN) II will be the communication medium to transport these services when it becomes available.

(7) Dial-up access to a meteorological data base (e.g., Kavouras) using Flight Planner textual and graphics weather data PC software will provide the GMCC-required weather services.

31. PHYSICAL DESCRIPTION. Although considered as one system, the GMCC equipment physically resides at both the GMCC facility and the parent ARTCC sector office.

a. GMCC/GMCC Facility. Located in the MCC room at the GMCC facility, the GMCC system consists of five work stations with StarLAN 10MB network access unit (NAU) cards connected to a StarLAN 10MB network hub unit (NHU) and functioning together to form a LAN. One work station will be the file server, three will be client general purpose work stations (GPW), and one will be a display processing work station (DPW). The DPW is supplied with a 20-inch large screen monitor (LSM), as is one of the three GPW's. The other two GPW's are supplied with 14-inch color video graphics adapter (VGA) monitors as is the file server. Two wide-carriage dot matrix printers will be provided: one connected to the file server and one connected to the DCE unit to serve as an MPS printer. Data storage, including both floppy and hard magnetic disk, magnetic tape and other secondary storage media as required, will be used by the GMCC for software storage, archival data backups, and tracking as well as numerous other activities essential to GMCC automation operations. Up to two 1.5 KVA uninterruptible power supplies (UPS) will be provided to ensure that critical GMCC equipment is protected against power surges and that essential operations and data will not be lost due to power interruptions. (Critical GMCC equipment includes the file server, the LSM, one GPW and monitor, the DCE unit and the local telephone switch, if required.) One NHU, one Ethernet attachment unit interface (AUI) adapter, and one bridge-router (Brouter) with an Ethernet controller card complete the GMCC facility system. Data communications equipment

(DCE) which provides a dedicated channel of at least 19.2 Kbps is required for communications connectivity. The five work stations, associated monitors, and printers will be installed in the work station consoles (refer to subparagraph 31a(6)). The Brouter, AUI adapter, NHU and DCE will be installed in a standard 19-inch equipment rack (refer to subparagraph 31a(12)). The physical configuration of the GMCC system is shown in figure 3-3. The individual units, which together comprise the GMCC LAN equipment, are described as follows:

(1). GMCC Central Processing Unit (CPU).

(a) 80386 Computer (one file server).

1 25 Megahertz 80386 microprocessor.

2 300MB hard disk storage with 8MB RAM.

3 14-inch color monitor (VGA).

4 UNIX operating system.

5 Network access unit card.

(b) 80386 Computer (three general purpose work stations.

1 25 Megahertz 80386 microprocessor.

2 80MB hard disk storage with 4MB RAM (8MB RAM provided for unit used with 20-inch monitor).

3 14-inch color monitor (VGA) (for use with two general purpose work stations).

4 20-inch high resolution color monitor (for use with one general purpose work station).

5 MS-DOS operating system.

6 Network access unit card.

(c) 80386 Computer (one display processing work station.

1 25 Megahertz 80386 microprocessor.

2 80MB hard disk storage with 8MB RAM.

FIGURE 3-3. GMCC CONFIGURATION

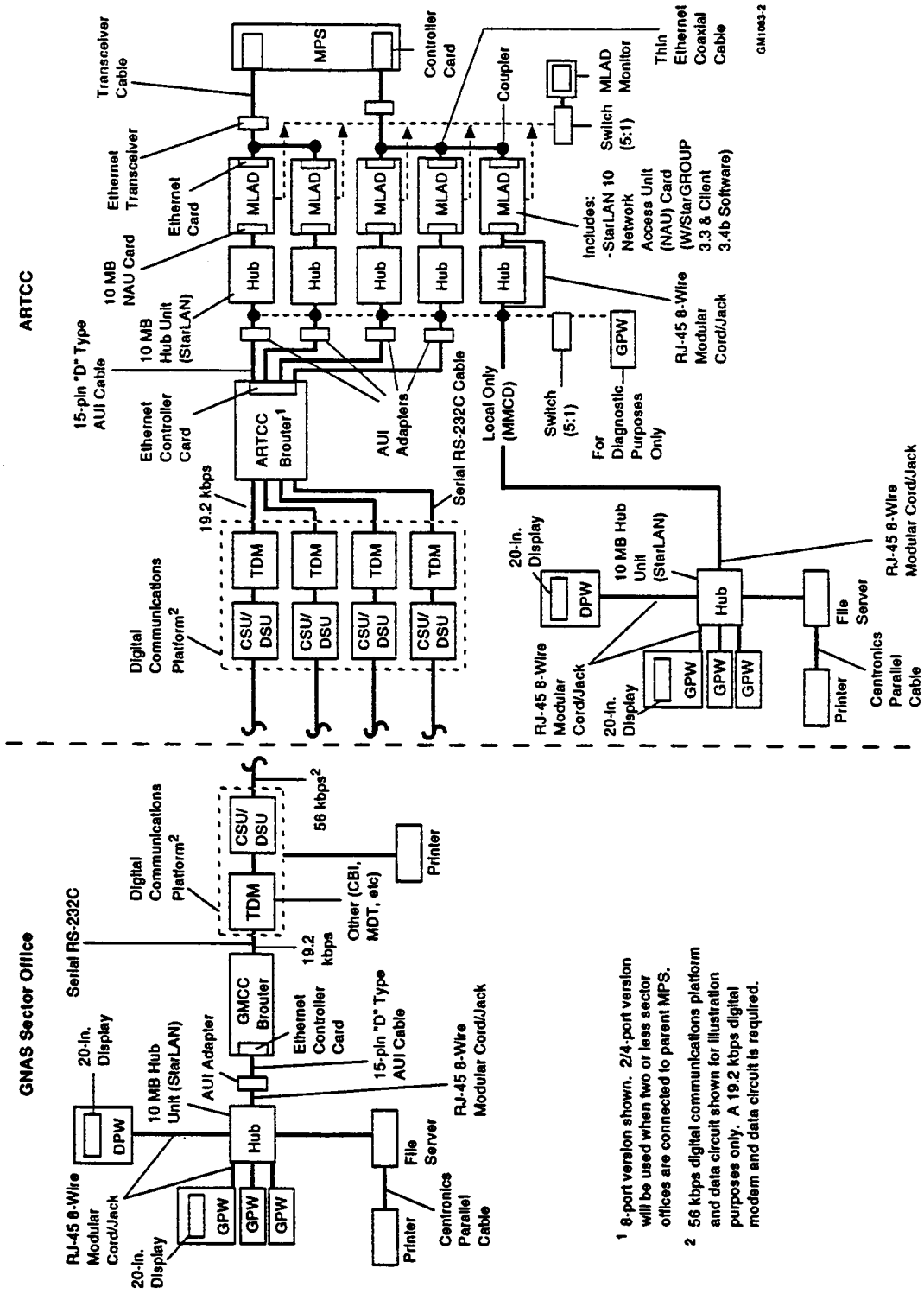


[1] 8-port version shown. 2/4-port version will be used when two or less sector offices are connected to parent MPS.

[2] 56 kbps digital communications platform and data circuit shown for illustration purposes only. A 19.2 kbps digital modem and data circuit is required.

3 20 inch high-resolution color monitor.

4 MS-DOS operating system.

5 Network access unit card.

(d) Typical physical dimensions of GMCC processors are:

| Item | Height | Width | Depth | Weight |
|---|---|---|---|---|
| 80386 Computer | 6.5" | 21.25" | 19.0" | 45.0 lb. |

(2) GMCC Cabling. The cabling required to connect the GMCC facility equipment is as follows:

(a) One 3-foot cable (stretchable to 13 feet) to connect the keyboard to the work station.

(b) One 25-foot RJ-45 eight-wire cable from the work station, connecting the internal modem to an RJ-11 phone jack.

(c) One 6-foot power cord connecting the work station to the power control unit.

(d) One 6-foot power cord connecting the display monitor to the power control unit.

(e) One 6-foot, 15-pin female cable connecting the color monitor (VGA) to the work station.

(f) One 6-foot, 15-pin male cable connecting the color monitor (VGA) to the file server.

(g) One RGB video cable and 15-pin video terminator connecting the high resolution color monitor to the high resolution video card.

(h) Two 6-foot power cords connecting the printers to the power control unit or three-pronged, 20 ampere, 115 VAC power outlets.

(i) Two 7-foot, 25-pin female-to-Centronics-male parallel cables connecting the printers to the file server and DCE unit.

(j) Two RJ-45 eight-wire modular cables connecting the work station to the StarLAN hub and the

StarLAN hub to the AUI adapter (328-foot maximum cable lengths).

(k) One 3-foot Ethernet coaxial cable connecting AUI adapter to Ethernet controller card in the Brouter.

(l) RS-232C serial-straight-thru DB25 female-to-male cable connecting the Brouter to the DCE unit (300 foot maximum cable lengths).

(3) GMCC Displays/Keyboard/Mouse.

(a) The GMCC displays support VGA and Enhanced Graphics Adapter (EGA) capabilities, as well as an Red Green Blue (RGB) analog interface. Tilt swivel bases are components of the display units which are as follows:

1 14-inch VGA color monitors for use with two general purpose work stations and the file server.

2 20-inch VGA high-resolution color monitors for use with one display processing work station and one general purpose work station.

(b) The work station keyboards are full size, full travel, with 101 keys arranged in a standard QWERTY alphanumeric character and Enter (carriage return) layout.

(c) The Microsoft serial mouse, a two-button pointing device interfaced with graphics processing unit.

(d) The physical dimensions of the GMCC displays, keyboard, and Microsoft mouse are as follows:

| Item | Height | Width | Depth | Weight |
|---|---|---|---|---|
| 14 in. color monitor | 12.95 in. | 13.65 in. | 15.13 in. | 28.7 lb. |
| 20 in. color monitor | 21.0 in. | 21.0 in. | 16.5 in. | 35.0 lb. |
| Keyboard | 2.0 in. | 19.0 in. | 8.25 in. | 5.0 lb. |
| Microsoft mouse | 1.25 in. | 2.25 in. | 4.0 in. | 5.0 oz. |

(4) GMCC Software. The GMCC will utilize the following MS-DOS compatible software:

(a) Tandem 6530 terminal emulation software.

(b) Microsoft Windows software.

(c) Personal information management software.

(d) Spreadsheet software.

(e) Data base software.

(f) LAN software.

(g) Status display software.

(h) MS-DOS software/utilities.

(i) Unix/DOS software/utilities.

(j) Communications software (FAA site license).

(k) Flight Planner PC software.

(5) GMCC Printer. The GMCC printer is a wide-carriage dot matrix printer. The physical dimensions of the GMCC printer are approximately 7.4x24x17 inches (HxWxD) and a weight of 40 pounds.

(6) GMCC Work Station Consoles. The GMCC consoles and furniture (funded by the program office and procured by the regions) will provide the physical platform for the GMCC hardware and software. The GMCC facility will arrange the equipment layout according to the available space. GMCC work station consoles will be designed using commercial-off-the-shelf (COTS) office furniture similar to that described in the GMCC Site Preparation Information Package dated November 16, 1990. Preferred locations of the three GPW's, one DPW, one LAN file server and two dot matrix printers will determine site specific GMCC work station console configurations. A generic GMCC layout is provided in figure 3-4.

(7) GMCC Communications Requirements. GMCC communications requirements include both voice and telecommunications equipment/services.

(a) Voice communications requirements. A minimum of two voice-grade telephone lines are required (facility supplied). The GMCC telephone system shall be

FIGURE 3-4. PLANNED GMCC LAYOUT

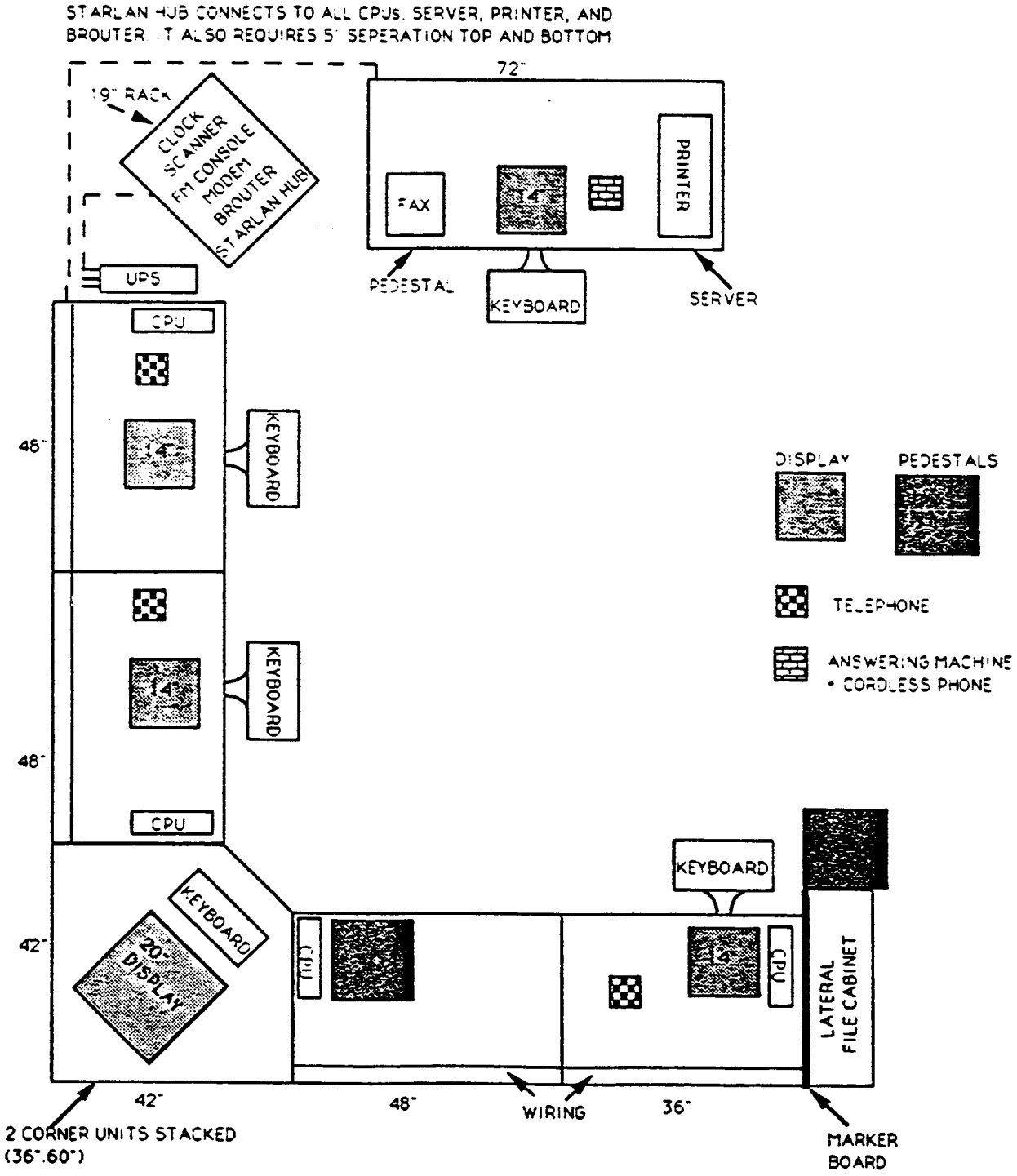

compatible with the existing host facility system, and should have the following features:

1 Multi-line capability (two-line minimum).

2 Speaker with ringer and volume control.

3 Support of modem dialing and auto-dialing (software control is an option).

(b) Telecommunications equipment/service requirements are as follows:

1 NOTAM information printing capability, i.e., leased service A/B, Kavouris, etc.

2 19.2 Kbps (minimum) DCE (one unit per site for connectivity from each GMCC to the parent ARTCC). The physical dimensions of the DCE unit are 3.5x15x18 inches (HxWxD). (Note: Dimensions are for Codex 3600 platform only.)

3 19.2 Kbps digital data-grade telephone line from each GNAS sector office to the parent ARTCC.

4 2400 bps modems installed in each GMCC work station (client only) to provide dial-up capability for back-up operation.

(8) GMCC Network Equipment. Network communications between work stations is accomplished with the Ethernet card(s) and traffic management devices described in the following paragraphs.

(a) The StarLAN 10MB Network Access Unit (NAU) is an 8-bit Ethernet card provided with network software that supports network communications at a rate of 10 megabits per second. The card is provided with each GMCC work station and connects to the NHU via an RJ-45 eight-wire modular cable.

(b) The StarLAN 10MB Network Hub Unit (NHU) connects the GMCC work stations equipped with NAU's in a flexible star configuration. The NHU provides eleven modular jacks and one attachment unit interface (AUI) port. The NHU amplifies and retimes network signals before transmitting them, detects and isolates jabber conditions, and detects the presence of network traffic and collisions.

(c) Attachment Unit Interface (AUI) Adapter. The AUI adapter is an network timing device that enables

network access for the Brouter which is equipped with an Ethernet controller card. The AUI side will be connected directly to the Brouter. The wire side will provide for modular cable connection to the network via the NHU.

(d) Brouter. The Brouter located at the GMCC facility is a two or four-port bridge-router (RS-232 serial/Ethernet interfaces) configured as a two-port high performance LAN interconnect device specifically designed to perform routing requirements across the GMCC data network. This device is also configured to operate concurrently as a media access control (MAC) layer bridge. The Brouter interfaces with an IEEE 802.3/Ethernet 15-pin AUI connecter and the 19.2 Kbps DCE unit thru a serial RS-232C serial-straight-thru DB25 female-to-male cable. The physical dimensions of the 2/4-port Brouter as configured for the GMCC are as follows:

| Item | Height | Width | Depth | Weight |
|---|---|---|---|---|
| Brouter (Two/four-Port) | 4.0 in. | 15.0 in. | 18.0 in. | 15.0 lb. |

(9) Data Storage Equipment. The data storage equipment features a streaming 1/4 inch tape cartridge unit. The unit is configured with half height 5.25 inch form factor, and is internally mounted in the file server with a storage capacity of 120 MB.

(10) GMCC Power Control/Conditioning Equipment. Power control and conditioning equipment includes up to two UPS per facility and a power conditioner unit (PCU) for each work station.

(a) Uninterruptible Power Supply (UPS). Providing up to 1.5 KVA, this unit will provide up to 20 minutes of backup time under full load. Under partial load, the UPS will be able to provide up to 50 minutes of backup power. Several models are currently undergoing design qualification testing by Air Traffic Control Sustaining Engineering Division, ACN-100D. Following completion of testing and a design selection, a model will be provided to the field at a later date.

(b) Work Station Power Conditioner Unit (PCU). The PCU is a peripheral device supplied with each GMCC work station. The unit is provided with an illuminated master switch controlling five separately switched 8-amp power outlets (with illumination), a 15-amp pushbutton circuit

breaker, and built-in surge and spike protection, brownout sensing, and static control.

(11) GMCC Ancillary Equipment.

(a) FM NARACS (facility supplied).

(b) SSB/HF emergency equipment (facility supplied).

(c) AM/FM programmable frequency scanner (facility supplied).

(d) Answering machine (facility supplied).

(e) Facsimile machine (facility supplied).

(f) Equipment cabinet (facility supplied).

(g) Fire extinguisher (facility supplied).

(12) GMCC Equipment Rack. A standard 19-inch equipment rack with the approximate dimensions of 78x22x26 (HxWxD) inches is required to house the Brouter/AUI adapter, NHU, DCE and ancillary equipment. Arrangement of equipment within the rack should be standardized and as such is subject to configuration control as determined by the Data Systems Communications Engineering Branch, ASM-450. Detailed information for procurement of the rack was provided in the GMCC Phase I Site Preparation Information Package dated November 16, 1990. Information for configuration and cabling of the rack was provided in the GMCC Phase II Site Preparation Information Package dated July 8, 1992.

b. GMCC/ARTCC Sector Office. Located in the ARTCC sector office near the MPS, one Brouter, one AUI adapter, one StarLAN NHU, and one NAU card installed in a Tandem MultiLAN Access Device (MLAD) (supplied as part of MPS enhancement effort) will be required to complete each GMCC system interface to the parent MPS. In addition, one GPW will be supplied as a diagnostic work station; a single monitor will be connected across the NHU(s) utilizing a 5:1 video/keyboard switch. With the exception of the Brouter, all equipment will be mounted in two standard 22-inch equipment racks (refer to subparagraph 31b(8)). An additional MLAD and StarLAN NHU will be procured to provide a local interface for the Maintenance Management and Control Display (MMCD) element of the ARTCC MCC (AMCC). Refer to GMCC Phase II Site Preparation Information Package dated July 8, 1992 for

installation of MMCD equipment at the ARTCC sector office. Another 5:1 video/keyboard switch will be provided to allow for use of a single MLAD monitor. Access to the MPS will be via a thin Ethernet cable and transceiver connected to a Tandem dual-ported controller board located in the MPS (all of which are also being supplied as part of the MPS enhancement effort). Two controller cards and transceivers will be supplied with each MPS to provide for fault tolerance and/or local connectivity (e.g., MMCD element of AMCC). The DCE unit(s) will be located in the communications room (refer to subparagraph 71b(5)). Equipment to complete the ARTCC/MPS connection is as follows:

(1) Tandem Ethernet Controller Board(s). Provided as part of the MPS enhancement effort, the Ethernet controller is a dual-ported controller board that connects to two Tandem processors via two input/output channels for purposes of fault tolerance. Two system connections are required to connect one Ethernet controller to a MultiLAN attachment device. These connectors include the Ethernet transceiver and a 10 Mbits-per-second thin Ethernet cable. To provide even greater reliability, two Tandem Ethernet controller boards will be used to provide GMCC access to the Tandem MPS.

(2) StarLAN 10MB Network Access Unit (NAU). The StarLAN 10MB NAU is an 8-bit card provided with network software that supports network communications at a rate of 10 Mbits-per-second. The card is installed separately in the MLAD and connects to the NHU via an RJ-45 eight-wire modular cable.

(3) MultiLAN Attachment Device (MLAD). Also provided as part of the MPS enhancement effort, the MLAD is a Tandem 6AX work station containing an Ethernet 3COM adapter card used to connect to the 10-Mbits-per-second Ethernet cable and transceiver. The MLAD system is composed of a system unit, a monitor and a keyboard. The system unit includes one (1) Ethernet 3COM adapter card, MultiLAN software, DOS 5.0 software, and one (1) AT&T StarLAN 10MB NAU card which is provided separately. The MLAD system dimensions are 4x17x15.5 inches (HxWxD) with a weight of 20 pounds. The monitor dimensions are 12x13x13 inches (HxWxD) with a weight of 20 pounds. The keyboard dimensions are 2x19x8 inches (HxWxD) with a weight of 5 pounds.

(4) StarLAN 10MB Network Hub Unit (NHU). The NHU provides eleven modular jacks and one AUI port. The NHU amplifies and retimes network signals before transmitting

them to the Brouter thru the IEEE 802.3/Ethernet 15-pin AUI connector. The NHU connects to the 10MB NAU card which resides in the MLAD and to the AUI adapter. The physical dimensions of the NHU are 3x16.5x6.5 (HxWxD) inches with a weight of 7 pounds.

(5) Brouter. Depending on the number of GMCC facilities connected to the parent MPS, a two-port Brouter (ARTCC with one GMCC), a four-port Brouter (ARTCC with two GMCC's), or an eight-port Brouter (ARTCC with three or four GMCC's) will be provided. Like the two/four-port Brouter, the eight-port Brouter is a high performance LAN interconnect device specifically designed to support routing requirements across the GNAS MCC data network. The device is also configured to operated concurrently as a MAC layer bridge. The Brouter interfaces with the IEEE 802.3/Ethernet 15-pin AUI connector(s) and the 19.2 Kbps DCE unit(s) thru the serial RS-232C serial-straight-thru DB25 female-to-male cable(s). The physical dimensions of the eight-port Brouter as configured for the ARTCC sector office are as follows:

| Item | Height | Width | Depth | Weight |
|---|---|---|---|---|
| Brouter (eight-Port) | 10.5 in. | 17.5 in. | 20 in. | 32 lb. |

(6) Communications Equipment. The communications equipment required at the ARTCC is identical to that required for a GMCC facility (refer to subparagraph 31a(7b)). Since each interfacing GMCC requires a separate data line to its parent ARTCC, the total number of DCE units required at an ARTCC will vary from one to four.

(7) GMCC/ARTCC Cabling. Cabling necessary to complete the GMCC connections at the ARTCC (assuming that the Tandem MLAD equipment has been previously installed) is listed as follows:

(a) Seven-foot RS-232C female-to-male serial-straight-thru DB25 cable(s) connecting the DCE unit(s) to the Brouter (three hundred-foot maximum cable length).

(b) Three-foot Ethernet coaxial cable(s) connecting AUI adapter(s) to Ethernet controller card in the Brouter.

(c) RJ-45 eight-wire cables connecting the AUI adapter(s) to the StarLAN hub(s) and the StarLAN hub(s) to the MLAD(s) (328-foot maximum cable lengths).

(d) One RJ-45 eight-wire cable connecting the GMCC StarLAN hub to the MMCD StarLAN hub (328-foot maximum cable length).

(8) ARTCC Equipment Racks. Two standard 22-inch equipment racks with the approximate dimensions of 78x27x26 (HxWxD) inches are required to house the Brouter, the NHU's, MLAD's, keyboard, diagnostic work station, monitor(s) and video switches. Arrangement of equipment within the racks is to be standardized and as such is subject to configuration control as determined by ASM-450. Detailed instructions for procurement, configuration, and cabling of the equipment racks will be provided in the GMCC Phase II Site Preparation Information Package to be issued by ANA-120.

32. SYSTEM REQUIREMENTS. System requirements relative to power, operating, and storage environment are as follows:

a. Power Requirements (± 10 percent per unit):

| Item | Voltage | Cycle | Power |
|---|---|---|---|
| 80386 Processor Unit | 115 VAC | 60 Hz | 192 watts |
| 14-Inch Color Monitor | 115 VAC | 60 Hz | 90 watts |
| 20-Inch Color Monitor | 115 VAC | 60 Hz | 276 watts |
| Dot Matrix Printer | 120 VAC | 60 HZ | 120 watts |
| 1.5 KVA UPS | 120 VAC | 60 HZ | TBD watts |
| MLAD | 120 VAC | 60 Hz | 100 watts |
| Tandem Monitor | 120 VAC | 60 Hz | 50 watts |
| GMCC Brouter | 120 VAC | 60 Hz | 230 watts |
| ARTCC Brouter | 120 VAC | 60 Hz | 410 watts |
| Network Hub Unit | 110 VAC | 60 Hz | 57.5 watts |
| Power Control Unit | 120 VAC | 60 Hz | N/A |

b. Work Area Operating Environment (processors, displays, printers).

(1) Temperature. Processors: 50 to 104 degrees Fahrenheit; Printers: 40 to 95 degrees Fahrenheit; Displays: 50 to 113 degrees Fahrenheit.

(2) Humidity. Processors: 20 to 80 percent relative, noncondensing; Printer: 10 to 80 percent relative, noncondensing; Displays: 8 to 80 percent relative, noncondensing.

c. Storage Environment (processors, displays, printers).

(1) Temperature. Processors: -40 to 140 degrees Fahrenheit; Printers: -25 to 150 degrees Fahrenheit; Displays: -40 to 140 degrees Fahrenheit.

(2) Humidity. Processors: 5 to 92 percent relative, noncondensing; Printers: 5 percent to 85 percent relative, noncondensing.

d. Equipment Separation. Based on available cable lengths or design limitations, maximum allowable separation of GMCC components is:

(1) Keyboards to CPU's: 3 feet.

(2) Display monitors to CPU's: 3 feet.

(3) CPU's to printers: 7 feet.

(4) Internal modems to phone jacks: 25 feet.

(5) Brouter to DCE unit(s): 300 feet. (Lengths in excess of 50 feet require the use of low-loss, low-capacitance RS-232C cable.)

(6) NHU(s) to AUI adapter(s), work stations and MLAD(s): 300 feet.

(7) AUI adapter(s) to Brouter: 3 feet.

(8) Printer to DCE unit: 7 feet. (Lengths in excess of 50 feet require the use of low-loss, low-capacitance cable.)

(9) GMCC NHU to MMCD NHU: 328 feet.

33. INTERFACES.

a. Functional Interfaces. The GMCC is functionally a user interface that supports RMMS functions relative to the monitoring of NAS facilities. The GMCC work station is supported with at least one parallel and one RS-232C serial port. The GMCC functionally supports the following interfaces:

(1) MPS. This interface enables users to issue control commands, remote adjustment commands, and diagnostic and certification test commands through the IMCS. It enables the user to enter and to request maintenance management data using MMS software.

(2) RMS. This interface is achieved through the MPS using the IMCS by allowing the user to access a NAS facility to monitor its performance and status, to receive alerts/alarms, to perform diagnostic and certification tests and to obtain maintenance management data.

(3) Service A & B. Service A & B including weather data will be provided through a commercial dial-up service until such time that an interface with NADIN II is developed.

b. Physical Interfaces. GMCC physical interfaces consists of those voice and data telecommunication circuits required for support of GNAS sector maintenance operations and management. GMCC interfaces for both phases I and II are as follows:

(1) GMCC Phase I. The interface for Phase I GMCC equipment is shown in figure 3-5. The interface is achieved between the serial port on the GMCC work station using a RS-232 cable and the serial port on the existing statistical multiplexer (STAT MUX) on the Paradyne DMN. Dial-up connectivity to the MPS is achieved through the DMN. Printers associated with the GMCC are slaved to the work station.

(2) GMCC Phase II. The interface for Phase II GMCC equipment will be physically configured as shown in figure 3-6. This interface is achieved by establishing two separate LAN systems and allowing the two networks to exchange data thru a series of gateways, DCE, and dedicated 19.2 Kbps circuits connecting the GMCC's to the MPS interface equipment resident in the parent ARTCC's.

34.-39. RESERVED.

FIGURE 3-5. GMCC PHYSICAL INTERFACE (PHASE I)

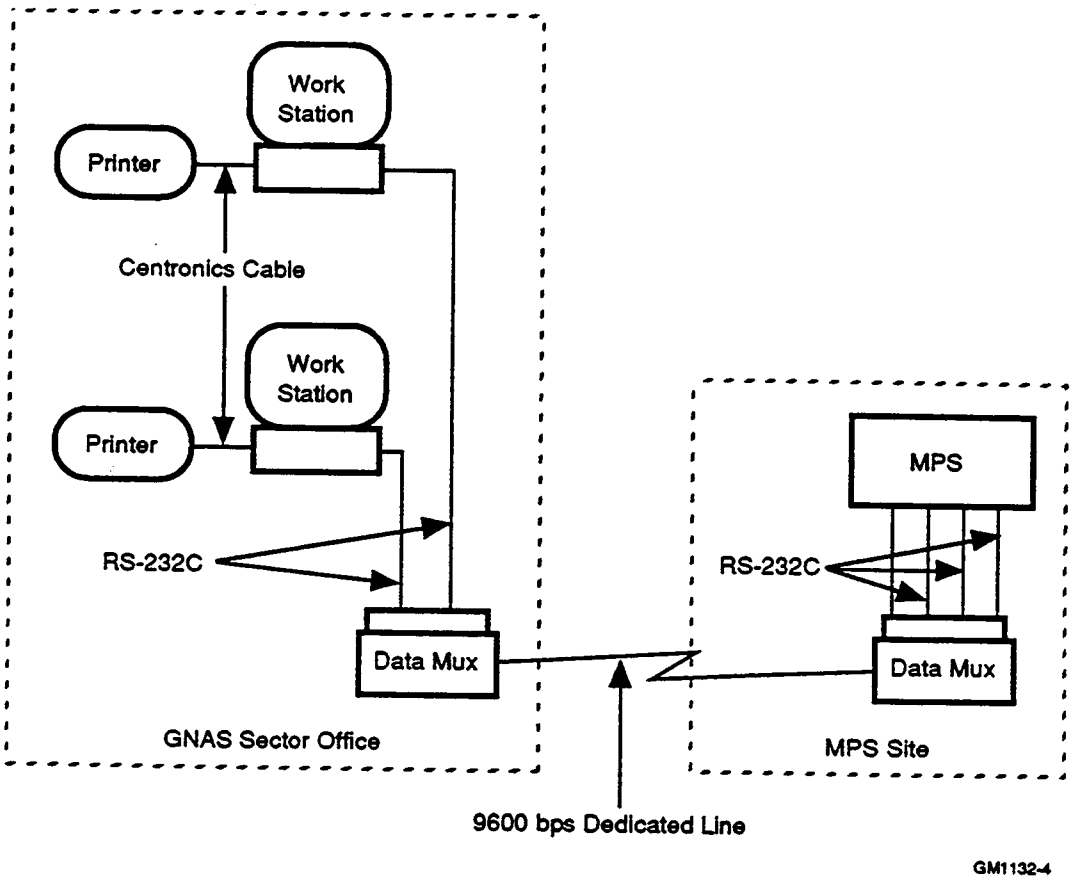

FIGURE 3-6. FUNCTIONAL GMCC/MPS INTERFACE

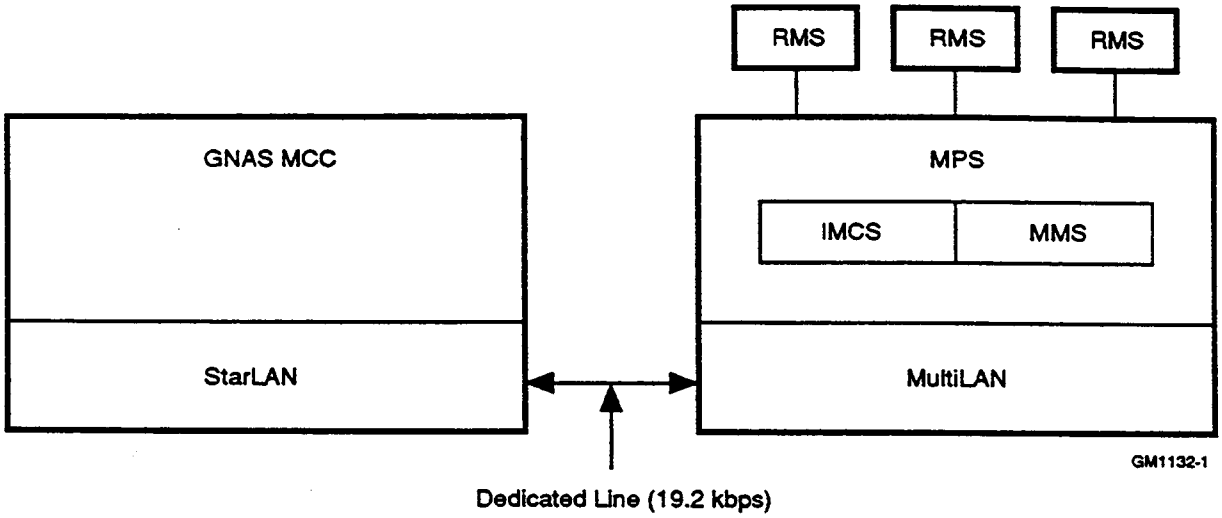

# CHAPTER 4. PROJECT SCHEDULE AND STATUS

40. PROJECT SCHEDULES AND GENERAL STATUS. Summary milestone schedules encompassing program and project milestone activities are developed and maintained by Martin Marietta, the System Engineering and Integration (SEI) contractor, and controlled by the Program Manager for Maintenance Automation ANA-200. Project milestones are reflected in terms of scheduled completion date, current status date and actual completion date. Project summary milestone schedules are reviewed bimonthly by the NAS Program Director Status Review (PDSR). The summary schedule associated with the GMCC project forms the basis for deriving the milestone schedule summary presented in paragraph 41.

41. MILESTONE SCHEDULE SUMMARY. The schedule summarizing GMCC implementation milestones is expressed in table 4-1 as a three-phased implementation approach. If necessary, the schedule will be changed to reflect the latest GMCC implementation milestones. Changes to the schedule will be implemented through the formal change process prescribed by the NAS Project Status and Baseline Schedule Change Control Procedures.

TABLE 4-1. GMCC IMPLEMENTATION SCHEDULE

| Activity | Phase I Date | Phase II Date | Phase III Date |
|---|---|---|---|
| OATS Equipment Delivered to ACN-100D | | 07/15/90 | |
| Deliver Site Prep Package | | 11/20/90 | |
| Start Delivery of Phase I Equipment | | 04/24/91 | |
| Complete Delivery of Phase I Equipment | | 05/31/91 | |
| System Delivered to First (T&E) Site (Phase II) | | | 10/07/91 |
| T&E Testing Complete (All test sites)(Phase II) | | | 05/04/92 |
| Integration Testing Complete (Phase II) | | | 07/17/92 |

TABLE 4-1. GMCC IMPLEMENTATION SCHEDULE (cont.)

| Activity | Phase I Date | Phase II Date | Phase III Date |
|---|---|---|---|
| Shakedown Testing Complete (Phase II) | | 08/07/92 | |
| DRR EXCOM Decision (Phase II) | | 08/18/92 | |
| First Operational Readiness Demonstration Complete (Phase II) | | 10/30/92 | |
| Start Delivery of Phase II Equipment | | 09/21/92 | |
| System Delivered to Last Site (Phase II) | | 03/05/93 | |
| Last ORD Completed (Phase II) | | 04/05/93 | |
| Geographic Status Display Implemented | | | 07/15/93 |

42. INTERDEPENDENCIES AND SEQUENCE. Implementation of GMCC's has been preceded by procurement, deployment, and enhancement of MPS's, and an on going development effort of MPS applications software consisting of MMS software and IMCS. However, implementation of the GMCC requirement for status and display functionality is dependent on the availability of specific versions of MMS software and IMCS. In addition, deployment of the Tandem controller and MLAD gateway will coincide with GMCC LAN deployment. Previously fielded MDT equipment and FM NARACS capabilities will experience expanded use upon implementation of the GMCC. Geographic display capabilities (GMCC Phase III) will be implemented with an enhancement to MMS and IMCS software. GMCC's are intended to provide GNAS sectors with the capability to make use of the evolving RMMS at centralized locations. Communications connectivity is dependent on the leasing of dedicated Telco circuits and DCE.

43.-49. RESERVED.

# CHAPTER 5. PROJECT MANAGEMENT

50. PROJECT MANAGEMENT, GENERAL. Overall project management responsibility for implementation of maintenance automation projects rests with the Automation Engineering Division, ANA-100. Project management functions and responsibilities are shared between the FAA and the SEI contractor. Division management functions relative to GMCC implementation encompass technical, financial, program office, and schedule/management planning responsibilities. Allocation of GMCC responsibilities is as follows:

a. Automation Engineering Division, ANA-100. Automation Program management, hardware and software procurement, hardware configuration management.

b. Program Manager for Maintenance Automation, ANA-200. Maintenance Automation Program management and program funding.

c. Associate Program Manager for Engineering (APME), Maintenance Automation, ANA-120. GMCC project management encompassing GMCC procurement and implementation.

d. Associate Program Manager for Weather Sensors Program, ANW-140. Weather sensors.

e. Technical Standards Branch, ASM-120. Management of operations-funded contract management.

f. Facilities Engineering Branch, ASM-140. Management of operations-funded contract maintenance.

g. Data System Communications Engineering Branch, ASM-450. Modification engineering; development of site Electronic Equipment Modifications (EEM) describing site installation and user requirements; software maintenance; documentation; baseline configuration management; operational test and evaluation (OT&E) and conduct key-site test shakedown testing.

h. Operations Program Branch, ASM-260. Project staffing and FAA Academy training requirements and quotas.

i. Policy and Requirements Branch, ASM-240. Development of the GNAS MCC operational concept, including production of FAA order to delineate operational aspects of GMCC function.

j. Maintenance Operations Branch, ASM-270. Development of the Maintenance Control Center (MCC) operations concept order, MCC operations implementation plan, and MCC operations procedures manual.

k. FAA Academy, AAC-900, Mike Monroney Aeronautical Center. Development and administration of technical training.

l. Airway Facilities Training Program Division, AHT-400. Personnel and training management including funding estimation, allocation, and administration (in conjunction with AHR-10, Executive Staff).

m. Associate Program Manager for Test, Maintenance Automation, ACN-100D. Development of hardware and software evaluation and integration test plans and procedures; GMCC and peripherals performance evaluation testing; FAA integration testing; GMCC implementation planning support. Responsibility of APMT/Test Director as specified in the latest edition of Order 1810.4, FAA NAS Test and Evaluation Policy.

n. Contracts Division, ASU-300. Preparation and management of contract award activities; contract management.

o. System Design and Transition Branch, ACN-140. Monitoring and assessing of ACN-250 and ASM-450 GMCC testing. Reviews GMCC test plans, test procedures, and test reports.

p. System Engineering and Integration (SEI) Contractor. Project management support and planning, including development and maintenance of program milestone and project summary schedules; development and coordination of GMCC logistic support requirements. Engineering support in the development of system acquisition, implementation, test, and deployment readiness review requirements.

q. AT&T Contractor. Provision of COTS hardware and software by means of the OATS contract, as required by the GMCC; provision of engineering services in support of GMCC field implementation, testing, and field support.

r. Advanced Systems Technology Branch, ACD-350. Development of the GNAS MCC A and B Level Specification (A & B Spec); human factors analysis of the operational aspects of the GNAS MCC; weather technology enhancements and interface to the MCC.

s. Volpe National Transportation Systems Center (VNTSC)/UniSys Contractor. MMS/IMCS software development and testing prior to delivery to the FAA for verification and deployment; implementation support; document preparation; and backup support to ASM-450 for software maintenance and the MMS/IMCS national hotline.

51. PROJECT CONTACTS. The personnel and project contacts involved in managing and planning the GMCC implementation effort include the following:

| Position | Name | Organ | Telephone |
|---|---|---|---|
| Program Manager | Ron Lipps | ANA-200 | (202)646-2021 |
| Associate Program Manager for Engineering | Al Beard | ANA-120 | (202)646-2093 |
| Contracting Officer | Abe Tennenbaum | ASU-310 | (202)267-3655 |
| Contracting Officer Technical Representative | Al Beard | ANA-120 | (202)646-2093 |
| Project Manager | Joel La Ferriere | ANA-120 | (202)646-5571 |
| Project Lead | Jerry McPherson | SEI | (202)646-5715 |
| Engineering Support | Terry Barcus | TAC | (202)863-2996 |
| VNTSC Project Manager | Russ Furtado | VNTSC | (617)837-2266 |
| AT&T Project Support Manager | Mel Christie | AT&T | (703)691-7106 |
| MPS Technical Officer | Gary Dickinson | ANA-120 | (202)646-5438 |
| Maintenance Ops/Implementation Requirements | Mickey Heflin | ASM-270 | (202)267-9694 |
| Test Director | Daniel Penrith | ACN-100D | (609)484-4337 |

| Position | Name | Organ | Telephone |
|---|---|---|---|
| OT&E Integration Testing | Richard VanSeutendahl | ACN-100D | (609)484-5831 |
| OT&E Shake-down Testing | Lou Hodac | ASM-450 | (609)484-6214 |
| System Enhancements | Dennis Steelman | ACD-350 | (609)484-4375 |
| SEI Configuration Management | Ronnie Raffensperger | SEI | (202)646-6976 |
| FAA Configuration Management | Paul Adams | ASM-140 | (202)267-9975 |
| Life-Cycle Maintenance | Charlie Baker | ASM-120 | (202)267-8307 |
| Logistics Management Specialist | Dave Grogan | AAC-402 | (405)680-4212 |
| Logistics Support | Patti Abbott | SEI | (202)646-2183 |
| Training Support | Kathy Perkins | SEI | (202)646-5345 |
| Training Development | Robert Pierce | AHT-400 | (202)366-6992 |
| Training Requirements | Duane Williams | ASM-250 | (202)267-3993 |
| FAA Academy Training | Bill Reimer | AAC-942C | (405)680-7422 |
| Scheduling Support | Kelli McGonigal | SEI | (202)646-5439 |
| Telecom Network Planning and Engineering | Paul Nagi | ASM-300 | (202)366-6248 |
| Communications Equipment | Paul Sass | ANC-140 | (202)646-4960 |
| DRR Program Management | Don Wurscher | AAF-11 | (202)267-7974 |

52. PROJECT COORDINATION. The project management office coordinates maintenance automation development, procurement, implementation and logistic support requirements through the following agency organizations:

a. Telecommunications Management and Operations Division, ASM-300. Leased communications.

b. Facilities Integration Division, ANS-200. NAS facility integration.

c. Surveillance Engineering Division, ANR-100. Surveillance.

d. Program Director for Navigation and Landing, ANN-1. Navigation aids.

e. Program Director for Weather and Flight Services Systems, ANW-1. Weather/Flight Service Stations.

f. Contracts Division, ASU-300. Procurement; contract management.

g. Airway Facilities Training Program Division, AHT-400. Coordination of training requirements.

h. FAA Logistics Center, AAC-400. Coordination and administration of logistics support.

i. FAA Academy, AAC-900, Mike Monroney Aeronautical Center. Coordination of training delivery.

j. Systems Engineering and Configuration Management Division, ASE-200. NAS configuration management.

k. NAILS Program Division, ANS-400. Logistics policy.

l. Regional Offices. Coordination of site equipment deliveries, system configuration management and transition planning.

m. GNAS Sectors. Each GNAS sector must develop a GMCC transition/operating procedures plan that addresses site-specific organizational impacts, manpower planning, scheduling, and operational requirements for the integration, test, and operational transition phases of GMCC, implementation, including support for site acceptance activities. The site must perform its own integration and operational transition activities in accordance with Order

1100.134, Maintenance of NAS Automation Subsystems, and Order 6000.15B, General Maintenance Handbook for Airway Facilities. Each GNAS sector should contact their respective regional NAS transition focal point (located in the regional Human Resource Management Division, AXX-10) for assistance in formulating transition plans.

53. PROJECT RESPONSIBILITY MATRIX. The Project Responsibility Matrix in figure 5-1 assigns program implementation activities and responsibilities.

54. PROJECT MANAGEMENT COMMUNICATIONS. GMCC project status is reviewed on a monthly basis by the NAS PDSR, and by ANA-100 at FAA headquarters in Washington, D.C. These reviews assess the technical, schedule, and cost status of the program, and are summarized in PDSR reports. In addition, the following management communications tools are used on thee GMCC project:

a. Annual national conference.

b. Monthly national teleconference.

c. Program management status reports (e.g, monthly PDSR).

d. Program office project review meetings (twice per month).

e. NAS Integrated Logistic Support Management Team (NAILSMT) bimonthly reviews.

f. Periodic project meetings and Technical Information Meetings (TIM).

g. Service-level and program office-level memorandums and newsletters.

h. As-required briefings. Bargaining unit representatives will be briefed as appropriate on the GMCC project and its effect on the maintenance technician work force at the national, regional, and local levels.

i. Letters of Agreement/Memorandums of Understanding.

55. IMPLEMENTATION STAFFING. The implementation phase of this project will generate site preparation and installation requirements. Regions will accomplish these requirements using Airway Facility or contract workforce, as determined by

FIGURE 5-1. PROJECT RESPONSIBILITY MATRIX

## TABLE 5-1. PROJECT RESPONSIBILITY MATRIX

| ACTIVITY | ACTION | ANA-120 | AT&T | ACN-250 | ASM-400 | GNAS SECTOR | ARTCC | SEI | REGIONAL F&E | TANDEM |
|---|---|---|---|---|---|---|---|---|---|---|
| SITE PREP. | FUND | X | | | | | | | | |
| | CONDUCT | | | | | X | X | | X | |
| OATS EQUIP. | PROVIDE | X | | | | | | | | |
| | RECEIVE | | | | | X | X | | | |
| | INSTALL | | X | | | | | | | |
| CONSOLES | FUND | X | | | | | | | | |
| | PROVIDE | | | | | X | | | | |
| | INSTALL | | | | | X | | | X | |
| PERIPHERAL EQUIP. | FUND | X | | | | | | | | |
| | PROVIDE | X | | | | X | | | | |
| | RECEIVE | | | | | X | | | | |
| | INSTALL | | X | | | X | | | X | |
| ARTCC EQUIP. RACKS | FUND | X | | | | | | | | |
| | PROVIDE | X | | | | | | | | |
| | RECEIVE | | | | | | X | | | |
| | INSTALL | | | | | | | | X | |
| MODEMS | PROVIDE | X | | | | | | | | |
| | RECEIVE | | | | | X | X | | | |
| | INSTALL | | X | | | | | | X | |
| MULTILAN | PROVIDE | X | | | | | | | | X |
| | RECEIVE | | | | | | X | | | |
| | INSTALL | | | | | | | | | X |
| SERVICE A&B WEATHER | PROVIDE | X | | | | | | | | |
| | RECEIVE | | | | | X | | | | |
| | INSTALL | | | | | X | | | | |
| INTEGRATION TESTING | PLAN | | | X | | | | | | |
| | CONDUCT | | | X | | | | | | |
| SHAKEDOWN TESTING | PLAN | | | | X | | | | | |
| | CONDUCT | | | | X | | | | | |
| CONFIG. MANAGEMENT | PLAN | | | | | | | X | | |
| | CONDUCT | | | | | | | X | | |
| LOGISTICS | PLAN | | | | | | | X | | |
| MAINTENANCE | CONDUCT | | X | | | | | | | |
| | FUND | (1) X | | | | | | | | |

(1) ONE YEAR FUNDING

individual regions. ANA-200 will provide funding to regional facility and engineering branches for each installation site. (Refer to chapter 6.)

56. PLANNING AND REPORTS. The plans and reports referenced in this order in relation to GMCC site implementation are:

a. National Airspace Integrated Logistics Support Plan (ILSP) for General NAS Maintenance Control Center (GMCC), September 25, 1990.

b. GMCC Subsystem Training Plan (STP), November 30, 1990.

c. GMCC Master Test Plan, February 27, 1992.

d. Design Qualification and Test and Evaluation Plan, Procedures, and Reports, December 12, 1991.

57. APPLICABLE DOCUMENTS. The following documents, referred to in this order, provide technical specifications, information, policy and directives applicable to this implementation. Conflict between these and other documents should be brought to the attention of the GMCC project manager for resolution.

a. NAS-SS-1000, NAS System Specification, December 10, 1991.

b. NAS-MD-794, Functions and Operational Requirements of the NAS Maintenance Control Center, March 15, 1986.

c. FAA-E-2875, GMCC Level A System Specification, December 18, 1990.

d. General NAS Sector Maintenance Control Center (GMCC), Site Preparation Information Package, November 16, 1990.

e. GMCC Phase II Site Preparation Information Package, July 8, 1992.

f. Order 6000.39, Maintenance Control Center (MCC) Operations Concept, August 8, 1991.

g. Order 6000.15B, General Maintenance Handbook for Airway Facilities, August 1, 1991.

h. Order 6190.4, Chg 21, August 22, 1991. (Electronic Equipment Modification Handbook, Maintenance Processor System.)

i. Order 1800.8F, NAS Configuration Management, May 20, 1991.

j. Order 1810.4A, FAA NAS Test and Evaluation Program, February 14, 1989.

k. Order 1100.134, Maintenance of NAS Automation Subsystems, June 27, 1973.

l. Order 1800.63, NAS Deployment Readiness Review (DRR) Program, July 10, 1990.

58. CONTRACT MANAGEMENT. Since there is no prime development contractor, the majority of contract-related activities will be provided by AT&T as part of the OATS contract. In addition, specific support services will be provided by Tandem, Inc. and VNTSC/UniSys. The management of the GMCC contracting activities will be performed by the Contracts Division, ASU-300, Acquisition Support Service as follows:

a. Contracting Officer (CO), designated by the Acquisition Support Service, Contracts Division, Regulatory Standards and Compliance Branch, ASU-310, will perform general procurement and contract management activities relative to the GMCC. This includes monitoring contractor deliveries and performing any other duties required to ensure that the terms of the contract are met by the contractor. The CO is the only person authorized to make any changes that will affect price, equipment quantities, deliverables, or schedules.

b. Contracting Officer's Technical Representative (COTR), designated by the GMCC project manager in ANA-120, will provide technical guidance and direction to the contractor within the scope and life of any GMCC contract management activities.

59. CONFIGURATION MANAGEMENT. Configuration management is the process used to identify and document the functional and physical characteristics of a configuration item, control changes to those characteristics, and record and report change processing and implementation status. Configuration items of concern for this implementation are the file server, general purpose work stations, display processing work

station, LAN, peripherals, COTS hardware and software, graphical status display software and associated documentation which comprise the GMCC baselines. The configuration management discipline shall be applied to all configuration items included in the GMCC baselines to ensure compatibility between elements within the GMCC, and between the GMCC and MPS operational computers. All additions and changes to the GMCC baselines shall be proposed in the form of a case file, and shall be reviewed for recommended approval or disapproval by a Configuration Control Board (CCB). All changes to the NAS site design baseline, and interfacility communications baselines will be controlled by the Automation Cluster (ANA) CCB until completion of the final Joint Acceptance Inspection (JAI). Configuration management responsibilities will then transfer from the ANA CCB to the Maintenance Engineering (ME) CCB. Refer to Order 1800.8F for guidelines to NAS configuration management policy.

a. Acquisition Phase Configuration Management. The ANA CCB controls the establishment of, and changes to, GMCC hardware and applications software baselines during the acquisition phase. For GMCC matters, the ANA CCB will function in accordance with the charter for the NAS ANA CCB. The ANA CCB is responsible for ensuring that the functional, performance, and interface requirements allocated to the GMCC hardware and software subsystems are reflected in the baselines, and in any changes to those baselines until product acceptance. The ANA CCB is also responsible for ensuring that baseline documentation is accurate and reflects GMCC operational requirements. Baseline documentation includes specifications and interface control documents (ICD). The ANA CCB retains this configuration management responsibility until the hardware installation is commissioned at each site, and until applications software enhancements are accepted by ASM-400 at the FAA Technical Center. Hardware and software product acceptance will be by Letter of Agreement (LOA) between the ANA CCB and the Maintenance Engineering CCB (ME CCB).

(1) Transition of Hardware Configuration Management. The transition of configuration management responsibilities associated with GMCC hardware products occurs at acceptance by the ANA CCB designated representative of the delivered, installed, integrated, and tested hardware product. Hardware product acceptance is based on successful JAI of the file server, general purpose work station, display processing work station, LAN, peripherals and ARTCC interface at each site. At product acceptance, the change control functions and CCB

records associated with hardware products transition from the ANA CCB to the ME CCB via a joint ANA CCB and ME CCB Configuration Control Decision (CCD).

(2) Transition of Software Configuration Management. Acceptance by ASM-400 of applications software product is based upon successful establishment of initial operating capability (IOC) at the FAA Technical Center. Upon acceptance, the applications software becomes the operational software baseline; i.e., COTS software and the Graphical Status Display Software. The change control functions and CCB records associated with applications software product transition from the ANA CCB to the ME CCB via a joint ANA CCB and ME CCB CCD.

b. Operational Support Phase Configuration Management. During the operational support phase, and for the entire life-cycle of the implemented hardware and software enhancements, configuration management functions will consist of maintenance and change control management of site unique as well as product baselines.

(1) Operational Hardware Configuration Management. The ME CCB assumes baseline and change control management of the general purpose work station, file server, display processing work station, LAN, and peripherals as each product is commissioned for operational service (via MOA), and of related NAS site design baselines (including logistics and training). The ME CCB is responsible for change control management of the GMCC hardware product baseline, and any support equipment and support software product baselines. Hardware and selected system and support software product baseline are maintained by AF personnel in the field. ANA-100 shall submit and/or evaluate engineering changes and either approve the change for field implementation via a case file, or request ASM-400 approval for system software changes. ASM-400 shall evaluate the changes and approve the change for field implementation via a case file for all automation equipment. ASM-600 shall be responsible for maintaining all non-automation hardware. The configuration management functions assigned to the ME CCB are described in the ME CCB charter and operating procedures.

(2) Operational Software Configuration Management. The ME CCB assumes change control management of the GMCC operational software baseline, and is responsible for ensuring the integrity of the operational software and required support software throughout its life cycle. The operational software product baseline is maintained by ME

personnel in the field. ASM-400 shall evaluate engineering changes to the system software baseline to determine the impact on operational software baseline. ASM-400 shall generate case files to implement any necessary changes to the operational software baseline and notify ANA-100 when engineering changes to the system software baseline can be incorporated. ASM-400 shall implement operational software changes prior to the next change in the functional software baseline in order to assure continued dedicated contractor maintenance. The configuration management functions assigned to the ME CCB are described in the ME CCB charter and operating procedure.

# CHAPTER 6. PROJECT FUNDING

60. PROJECT FUNDING STATUS, GENERAL. Funding for this project has been approved through fiscal year (FY) 1990, FY 1991 and FY 1992.

61. REGIONAL REQUIREMENTS. Limited Facilities & Equipment (F&E) funding for regional activities such as implementation planning and site preparation is being budgeted by the Maintenance Automation Program (ANA-200). Additional funding for FAA site preparation, onsite installation, checkout, and acceptance test support is also being budgeted through FY 1992. Each region will need to estimate the funds required to support the implementation activities described in this order. Utilizing the project authorization (PA) process, the Maintenance Automation Program Manager (ANA-200) will provide funds to each site as required to support GMCC implementation for the following:

a. Site Preparation. The cost of materials used in performing required site preparation will be funded by ANA-200.

b. Site Installation. All installation costs against F&E will be funded by ANA-200.

c. Installation Planning. Regional installation planning and validation activities will be funded by the ANA-100.

d. Training. Funding for initial training only will be provided by ANA-200. Prerequisite and attrition training will be funded by the Office of Training and Higher Education (AHT). Expenses for training travel must be provided by Activity 8 funding or training travel funding.

e. Maintenance and Spares. Maintenance will be done under the OATS contract. ANA-200 will provide funding for the first year of contract maintenance. Systems Maintenance will provide operational (OPS) funding for the remaining life cycle of the GMCC. The funding of spares is nonapplicable.

f. Ancillary Equipment. Funding for the items described in subparagraph 31a(11) will be provided by ANA-200 to the regions. Regions will be responsible for procuring equipment and furnishing it to the sites.

62.-69. RESERVED.

# CHAPTER 7. DEPLOYMENT

70. GENERAL DEPLOYMENT ASPECTS. ANA-120 will coordinate deployment of GMCC hardware and software with the support contractors using a three-phased implementation approach as described in figure 3-1. Completion of the first phase has provided a Tandem 6530 dial-up monitoring capability using a direct connection via the STAT MUX. The second phase will establish LAN distribution and storage capabilities. The third phase will consist of software enhancements to provide geographic display capabilities.

a. Site Deliveries. Delivery of GMCC hardware and software for Phase II will begin within 30 days after the delivery order is placed with the contractor, and will continue until completed. A delivery/installation schedule will be provided by the project office to each MAP/GMCC regional/site coordinator. Delivery of GMCC hardware and applications software will be made to the FAA Technical Center, Atlantic City, NJ, 55 GNAS sector offices, 22 ARTCC sector offices, and a specially configured training system to the Aeronautical Center (AAC-900) in Oklahoma City, Oklahoma, in accordance with the provisions of paragraph 72. Delivery of developed MMS/IMCS and GMCC operational software for both Phases II and III will be distributed by ASM-450 through site program bulletins (SPB).

b. Deployment Readiness Review. As required by Order 1800.63, NAS Deployment Readiness Review (DRR) Program, dated July 10, 1990, a deployment readiness review (DRR) will be conducted by ANA-120 prior to initiation of equipment deliveries on a national basis. The formal DRR briefing to AAF-1 will occur after integration testing is conducted by ACN-100D and shakedown testing is completed by ASM-450. The purpose of the DRR is to determine the readiness of site personnel (e.g., training) and procedures to deploy (i.e., install, integrate, operate, and support) the GMCC hardware in the operational environment. The outcome of the DRR will be a deployment decision which may be contingent on the resolution of action items identified during the DRR process.

71. SITE PREPARATION. Site preparation activities required to support implementation of GMCC hardware and software will be performed by assigned AF division and/or sector personnel prior to the contractors' scheduled deliveries. The site preparation activities shall ensure that the facility is in compliance with all FAA orders/directives on power distribution, grounding, bonding, and lightning protection.

a. General Site Preparation Requirements. In general, site preparation will consist of verifying that adequate electrical receptacles and communications lines are available and that floorspace is sufficient to support all activities.

(1) Preinstallation Requirements. Preinstallation requirements consist of those activities that must be completed prior to the installation of Phase II equipment. Activities include the following:

(a) It is assumed that all locations have received and complied with the GMCC Site Preparation Information Package dated November 16, 1990. Although already distributed, GNAS sector offices can contact the GMCC Project Manager (ANA-120) to obtain additional copies of the document if necessary.

(b) It is also assumed that all applicable locations have received the GMCC Phase I equipment deliveries and have installed the equipment in accordance with Order 6140.4, Chg 21 dated August 22, 1991 (Electronic Equipment Modification Handbook, Maintenance Processor System).

(c) It is further assumed that all applicable locations will comply with the Site Technical Bulletin (STB) addressing the MPS site preparation, and the EEM addressing the MLAD installation, both of which are required for the Tandem CLX replacement/TXP enhancement. Both the STB and EEM are being developed by ASM-450 and are scheduled for distribution in mid-1992. Completion of the STB and associated EEM is required for operation of the GMCC system.

(d) Detailed site preparation and equipment set-up instructions supporting GMCC and ARTCC locations (including MMCD equipment) are being developed by ANA-120 and will be provided separately via a GMCC Phase II Site Preparation Information Package to be distributed to all applicable locations prior to deployment of Phase II equipment. The instructions will contain detailed rack wiring, cabling and equipment installation instructions supplementing those issued by the vendor with the equipment.

(2) Site Access Requirements. The physical characteristics of site access points, such as entranceways, ramps, stairwells, hallways, etc., must accommodate passage of GMCC and MPS components to designated floor locations in all applicable facilities. Refer to chapter 3 for equipment dimensions.

b. Specific Site Preparation Requirements. Specific site preparation requirements are driven by the GMCC equipment physical characteristics described in chapter 3 and will vary in accordance with the site-peculiar needs of the GMCC facility and ARTCC sector office locations. Specific site preparation requirements cover floor loading and space, cabling, power, equipment racks, communications, and the MPS.

(1) Floor Loading and Space Requirements. Floor loading and space requirements for the GMCC facility and ARTCC sector office are as follows:

(a) GMCC Facility Floor Loading and Space Requirements. As directed by ASM-450, GMCC equipment shall be located in the designated MCC area. AF personnel will need to ensure that the GMCC area floor will support GMCC hardware in the designated locations. (Refer to figure 3-4 for floor plan of GMCC area.) The total floor loading requirement for GMCC equipment will not exceed that of a standard office environment. The weight associated with each GMCC component is provided in chapter 3. Approximately 300 square feet will be required to accommodate GMCC work station consoles and one standard 19-inch equipment rack (refer to subparagraph 31a(12)). Additional space of approximately 10 linear feet should be provided for the storage of hardware and software documentation.

(b) ARTCC Sector Office Floor Loading and Space Requirements. Floor loading tolerances for GMCC/MPS equipment are well within maximum allowable tolerances for an ARTCC facility. As directed by ASM-450, the GMCC/MPS equipment and racks shall reside within the currently configured MPS area. (For floor plan of the MPS area, refer to the STB addressing the MPS site preparation required for the Tandem CLX replacement/TXP enhancement.) Sufficient space must be allocated for two standard 22-inch equipment racks (refer to subparagraph 31b(8)).

(2) Cabling Requirements. Cabling requirements for the GMCC facility and ARTCC sector office are as follows:

(a) GMCC Facility Required Cabling. As described in the GMCC Site Preparation Information Package for Phase I, cabling external to the GMCC equipment (e.g., cabling for two phone lines) shall be supplied and installed by each site prior to installation of the equipment. System interconnecting cabling (used to connect Phase II GMCC equipment to existing Phase I equipment) will be supplied by the contractor upon equipment installation. Each site will

be required to pre-install specific lengths of RS-232C and eight-wire (four-pair) RJ-45 modular cable which will interface the Brouter/AUI adapter to the DCE and to the NHU respectively. Specific cable lengths will be determined by relative locations of the DCE unit and Brouter. RS-232C cable runs in excess of 50 feet will require use of low-loss, low-capacitance cable to minimize high-frequency signal distortion when operating at 56 Kbps. Use of eight-wire RJ-45 cable in the vicinity of electrical (RF) interference (e.g., communications equipment, neon lights, motors, etc.) will require use of unshielded twisted pair (UTP) or better LAN cable to minimize noise interference. Plenum-rated cabling is required for all sub-floor cable runs. Refer to subparagraph 32d for maximum equipment separation limits.

(b) ARTCC Sector Office Required Cabling. The cabling required to complete GMCC connectivity to the MPS will be provided as part of the supplied equipment except for the RS-232C cable (Brouter to DCE) and eight-wire RJ-45 cable (Brouter to NHU). Each site will be required to pre-install specific lengths of RS-232C and eight-wire (four-pair) RJ-45 modular cable which will interface the Brouter/AUI adapter to the DCE and to the NHU respectively. Specific cable lengths will be determined by relative locations of the DCE and Brouter. RS-232C cable runs in excess of 50 feet will require use of low-loss, low-capacitance cable to minimize high-frequency signal distortion when operating at 56 Kbps. In addition, each site will be required to pre-install a specific length of eight-wire RJ-45 modular cable from the designated location of the MMCD NHU to the GMCC NHU in one of the GMCC equipment racks in the MPS area. Use of eight-wire RJ-45 cable in the vicinity of electrical (RF) interference (e.g., communications equipment, neon lights, motors, etc.) will require use of UTP or better LAN cabling to minimize noise interference.) Refer to subparagraph 32d for equipment separation limits.

(3) Power Requirements. Power requirements for the GMCC facility and ARTCC sector office are as follows:

(a) GMCC Facility Power Requirements. Site personnel must ensure that at least one 120-volt, 20-ampere alternating current (AC) circuit is available to provide power to the GMCC equipment consoles and equipment rack, including ancillary equipment. Each GMCC work station will require access to a standard three-pronged power outlet located on the GMCC work station console. An additional 120-volt, 20-ampere AC circuit is recommended to provide power to the UPS unit when it becomes available.

(b) ARTCC Sector Office Power Requirements. ARTCC personnel must ensure that additional AC power is available to support additional MPS equipment. Provision is required for two 120-volt, 20-ampere AC circuits that will supply power from the Exide bus to two 22-inch equipment racks. Initiation of MPS enhancement site preparation activities currently scheduled for completion in mid-1992 may precede GMCC deployment and thereby satisfy the requirement for provision of AC power to the vicinity of equipment racks. Wiring of the equipment racks with at least 12 three-pronged, center-ground, 20-amp 115 VAC power outlets will be the responsibility of the site. (Refer to the GMCC Phase II Site Preparation Information Package for MMCD power requirements.)

(4) Equipment Rack Configuration Requirements. Equipment rack configuration requirements for the GMCC facility and ARTCC sector office are as follows:

(a) GMCC Facility Equipment Rack Configuration. Sufficient space for one Brouter, one NHU, one DCE unit and ancillary equipment has been provided for in a standard 19-inch equipment rack located in the MCC area. (Note: Colocation of the Brouter and DCE is recommended to minimize length of the RS-232C interconnecting cable, thereby minimizing high-frequency signal distortion when operating at 56 Kbps.) Layout of the rack is to be standardized and as such is subject to configuration control as determined by ASM-450. Detailed instructions for procurement, configuration, and cabling of the equipment rack will be provided in the GMCC Phase II Site Preparation Information Package to be issued by ANA-120.

(b) ARTCC Sector Office Equipment Rack Configuration. Up to five Tandem MLAD's (including MMCD equipment), one AT&T Brouter and five AT&T StarLAN NHU's (including MMCD equipment) will be mounted in two 22-inch equipment racks located in the MPS area. Although allowance has been made for installation of the Brouter within one of the equipment racks, colocation with the DCE in the communications area is recommended to minimize length of the RS-232C cable, thereby minimizing high-frequency signal distortion when operating at 56 Kbps. A GPW, monitor, and keyboard will be included to provide for diagnostic support at the ARTCC. Two video switches have been provided to allow for use of a common monitor for the MLAD units and to allow for switching of the diagnostic monitor across all NHU's. Space has also been provided for the remoting of the MMCD server should this option be selected. The purchase,

installation, wiring/cabling, and setup of equipment racks will be the responsibility of the site. Layout of the racks is to be standardized and as such is subject to configuration control as determined by ASM-450. Detailed instructions for procurement, configuration, and cabling of the equipment racks will be provided in the GMCC Phase II Site Preparation Information Package to be issued by ANA-120.

(5) Intra-Facility Communications Requirements. Provision of 19.2 Kbps DCE and data lines is required for connectivity between all GMCC's and each parent ARTCC prior to installation of the GMCC equipment. A dedicated data-grade Telco line providing a bandwidth of at least 19.2 Kbps is required between each GMCC facility and its parent ARTCC sector office. In addition, a 19.2 Kbps DCE unit is required at each GMCC facility and ARTCC sector office for connection to each data line. Sector personnel should contact the regional TM&O office to coordinate the timely ordering and installation of lines and DCE. ARTCC sector office DCE units are to be installed in the existing communications area utilizing available equipment racks. (Refer to subparagraph 31a(7)(b) for unit dimensions.) Depending on the number of GMCC's, space must be provided at the ARTCC for one to four DCE units. Site personnel must ensure that a sufficient number of Exide circuits are available for connection of the required number of DCE units.

(6) MPS Downtime Procedures. When Tandem MultiLAN software is installed onto the MPS, the MPS will be powered down for approximately 3 hours while required activities (i.e., SYS GEN) are completed. Specific operational downtime procedures will be addressed in the MPS enhancement EEM currently being developed by ASM-450.

72. DELIVERY. With the exception of ancillary equipment and the DCE, all GMCC hardware and applications software (including MMCD) is being provided by the AT&T OATS contract. All equipment will be palletized for each individual delivery location and addressed accordingly. Deliveries will commence to the sites immediately following receipt of a DRR EXCOM decision to deploy and will be scheduled to support each site's installation date in a timely manner.

73. INSTALLATION PLAN.

a. Scope. The AF division, with the support of the installation contractor, will be responsible for receipt, installation, checkout, and integration of the GMCC equipment at both the GMCC facilities and ARTCC sector offices.

b. GMCC Facility Installation and Checkout Methodology. Phase II of GMCC deployment begins with the requested verification of Phase I equipment operability, followed by provision of an official AT&T delivery date for Phase II equipment. Upon notification of delivery, local AT&T/NCR field technicians will do on site setup and checkout of OATS-furnished Phase II equipment. A formal 90-day warranty period commences after equipment is accepted by the FAA as operational. Following checkout of the equipment, a team of AT&T field engineers will arrive to begin installation of networking hardware and software to provide MPS system connectivity up to and including the Brouter at the GMCC sites. (The FAA shall have previously installed the communication equipment and associated RS-232C and RJ-45 eight-wire cabling that provides connectivity to the Brouter and NHUs at the GMCC site.) Following installation, system acceptance tests will be performed by AT&T field engineers and GMCC facility personnel in accordance with procedures and checklists developed by AT&T. The GMCC facility must coordinate with the onsite NAS coordinator those installation and system checkout activities that may interfere with the day-to-day operation and maintenance of the existing NAS equipment.

c. ARTCC Sector Office Installation and Checkout Methodology. Installation and checkout of Tandem and OATS-furnished equipment at the ARTCC sector office begins in Phase II. FAA site personnel will install the equipment racks as described in the GMCC Phase II Site Preparation Information Package to be provided by ANA-120. The FAA shall also have previously installed the DCE and associated RS-232C and RJ-45 eight-wire cabling that provides connectivity to the Brouter and NHU(s) at the ARTCC. Following delivery and initial setup/checkout, AT&T/NCR field engineers will arrive to install the appropriate Brouter, AUI adapter(s), NHU, NAU card(s), and associated cabling. Installation of NAU cards assumes that the MultiLAN equipment, including the MLAD, has been previously installed by Tandem. Following installation, system acceptance tests will be performed by AT&T field engineers and FAA site personnel in accordance with procedures and checklists developed by AT&T. The ARTCC sector office must coordinate with the onsite coordinator all installation and system checkout activities that may interfere with the day-to-day operation and maintenance of the existing NAS.

74.-79. RESERVED.

# CHAPTER 8. VERIFICATION

80. FACTORY VERIFICATION. All GMCC hardware and most software items subject to implementation under this PIP are COTS equipment and software. AT&T and Tandem will perform product testing in accordance with the best commercial practice prior to shipment of the GMCC equipment to the designated location. ANA-120 will develop and test status display software prior to release to the field. Refer to Order 1810.4, FAA NAS Test and Evaluation Policy, for test policy guidelines.

81. CHECKOUT. This level of testing is normally performed by the contractor to verify operational capability of the equipment after site installation. For the GNAS MCC project, this level of testing will also be satisfied by Design Qualification Test & Evaluation (DQT&E) testing to be performed by ACN-100D at the FAA Technical Center.

82. CONTRACTOR INTEGRATION TESTING. No formal contractor integration test activities will be performed in association with GMCC field deployment, however, AT&T will act as an integration support contractor during FAA integration testing. (Refer to paragraph 85.)

83. CONTRACTOR ACCEPTANCE INSPECTION (CAI). No formal acceptance testing will be performed by a contractor. Demonstration of the operation of the individual units, software and LAN operation will be performed as part of site acceptance testing for each site. (Refer to paragraph 87.)

84. TEST & EVALUATION (T&E) SITE TESTING. T&E site test activities include testing of the GMCC system conducted at designated test sites. The GNAS test sites include the Pittsburgh AFS, St. Louis AFS, and Portland AFS. The ARTCC test sites include Leesburg ARTCC, Kansas City ARTCC, and Seattle ARTCC. The primary purpose of T&E site testing is to checkout the hardware and software installation at the T&E site and validate hardware and software operability.

85. FAA OT&E INTEGRATION TESTING. NAS integration testing, a project-level test activity, will be conducted by ACN-100D at the FAA Technical Center and the key site (if required). It will encompass integration testing of the vendor-supplied hardware using vendor and FAA-supplied software. FAA integration test plans and procedures will also be developed by ACN-100D.

86. OT&E SHAKEDOWN AND CHANGEOVER. ASM-400 will perform limited shakedown testing at the FAA Technical Center and complete system shakedown testing at the key site.

87. SITE ACCEPTANCE TESTING. Following the completion of shakedown testing and a deployment decision, system testing will be performed at each GMCC site by AT&T and FAA personnel. This will be done prior to JAI and hand-off to the sector in order to ensure that all hardware and software comprising the GNAS MCC system is operational and acceptable to site personnel.

88. JOINT ACCEPTANCE INSPECTION (JAI). After acceptance testing at the GMCC sites, a JAI will be conducted by regional and site personnel to verify:

a. Completeness and acceptability of all site installations, modifications, and acceptance demonstrations.

b. Completeness and adequacy of site acceptance testing.

c. Capability of each site to fulfill integrated logistic support requirements.

d. Completeness and adequacy of site documentation.

e. Adequacy of site personnel for operating and maintaining the GMCC.

f. Adequacy of JAI discrepancy resolutions.

Following successful completion of the JAI, commissioning of the facility will be accomplished by site personnel based on existing commissioning procedures.

89. RESERVED.

# CHAPTER 9. INTEGRATED LOGISTICS SUPPORT

90. MAINTENANCE CONCEPT. The maintenance concept associated with logistic support of newly-implemented GMCC equipment comprises centralized software maintenance and site-level hardware maintenance. GMCC software maintenance will be provided by the Data Systems Communications Engineering Branch, ASM-450, for that portion of the software residing on the Tandem network. Initially, site-level hardware maintenance for OATS equipment will be provided through the OATS contract using per-call maintenance with a 2-hour response time. Non-OATS GMCC equipment will be procured by the regions with funds provided by the program office and will be maintained or replaced by the regions. First-year maintenance for OATS and non-OATS equipment will be funded by the program office; Systems Maintenance will be responsible for continuing hardware and software maintenance for the remaining equipment life cycle.

91. TRAINING. AF site personnel (i.e., MCC specialists, MPS specialists, and NAS area specialists) will receive comprehensive training in the use of the GMCC system. Initial training will be provided through a combination of contractor-developed out-of-agency courses and an existing FAA OJT course until such time that formal academy-resident courses are developed. Proposals for development of FAA academy-level courses are currently being reviewed by ASM-250 for approval and assignment of course numbers. Personnel requiring training will be identified by the appropriate supervisory/management level personnel. Currently, GMCC training is divided into three areas: operational (including MMS/IMCS), systems administration/management (AT&T StarLAN), and Tandem MultiLAN training. Whereas provision of the operational and systems management/administration training is the responsibility of the GMCC project office, the Tandem MultiLAN training is being provided by the MPS enhancement project. The following is a description of current GMCC training courses:

a. MMS/IMCS ON THE JOB TRAINING (OJT) Training (FAA Course No. 43611). This self-teaching course is currently available to all AF site personnel and should be completed by all appropriate ARTCC and GNAS sector office personnel prior to taking the GMCC operational training course. A performance examination will be administered upon completion of the OJT course. Enrollment in the OJT course is not mandatory for previously trained personnel.

b. GMCC Operational Training (FAA Course No. 48207). This 5-day course will be provided by AT&T at centrally-located FAA facilities and/or at the FAA Academy in advance of and during the installation period. It will consist of specialized training for the provided application software and "hands on" training on use of the GMCC system. It will include an overview of the system as well as a number of exercises simulating operations. Although primarily intended for the MCC specialist, it will also be provided to appropriate ARTCC personnel such as NAS area specialists. MMS/IMCS training such as field OJT course 43611 and knowledge of MS-DOS are prerequisites for this class.

c. Systems Management/LAN Administration Training (FAA Course No. 48206). This 5-day course will be provided by AT&T at centrally-located FAA facilities and/or at the FAA Academy in advance of and during the installation period. It will provide LAN administration skills to the individuals responsible for maintaining the StarLAN operation at the GMCC facilities. Individuals may or may not be the MCC specialists depending on their level of automation knowledge. This training will be provided to one or two individuals from each GNAS sector office and to appropriate ARTCC sector office personnel. Extensive knowledge of personal computers and automation in general are prerequisites for this class. Knowledge of LAN operations is desirable.

d. MultiLAN Training (FAA Course No. 49245). This 7-day course will be provided by Tandem Corporation at their factory facility in Reston, Virginia in advance of and during the MPS enhancement effort scheduled for completion in mid-1992. It will consist of an introduction to LAN operations and support, and will be provided to MPS specialists and other selected AF personnel. Knowledge of MS-DOS is a prerequisite for this class.

92. SUPPORT TOOLS AND TEST EQUIPMENT. No special support except for common tools or test equipment are required for the GMCC.

93. SUPPLY SUPPORT. No FAA depot-level on site maintenance facilities or spares will be required. Replacement parts for repairable systems will be provided by vendors as part of existing maintenance contracts.

94. VENDOR DATA AND TECHNICAL MANUALS. The following vendor data and technical manuals will be issued to ANA-100 and to the sites.

a. GMCC Users Guide including GMCC system overview and configuration, installation and use of the GMCC software in the LAN environment, accessing MMS/IMCS/TACL from the GMCC, Facility Status Monitor display and application, Facility Status Data Base and the Import/Export application, description of data entry screens and the Facility Data Base application, and the Communications group window.

b. GMCC Installation Documentation including system architecture, ARTCC and GMCC installation procedures, software and hardware configuration data, installation test procedures, and system acceptance procedures and checklists.

c. Vendor data including operating instructions for the microcomputer, file server, disk operating system, and LAN system and printer; set-up and run instructions and technical specifications for system add-ons (hard disk drive, diskette drive), printer, tape drive and UPS (when available).

95. EQUIPMENT REMOVAL. No equipment removal is required for installation of the GMCC. Installation of MMCD equipment may require the relocation of Tandem 6530 terminals.

96. FACILITIES. Installation of GMCC equipment at both the ARTCC and GNAS sector offices will have an impact on facilities. Refer to chapter 7 for a description of facility requirements.

97.-99. RESERVED.

## APPENDIX 1. REGIONAL MAP COORDINATORS

| Region | Name | Office | Phone No. |
|---|---|---|---|
| Alaska | Jerry Jensen | AAL-460 | (907)271-5831 |
| Central | Tom Mardis | ACE-425 | (816)426-5676 |
| Eastern | Selim Haber | AEA-461 | (718)712-5465 |
| Great Lakes | Vinn Beigh | AGL-460 | (312)694-7605 |
| New England | Steve Ng | ANE-460 | (617)270-2482 |
| Northwest Mountain | Hiroshi Oishi | ANM-460 | (206)227-2867 |
| Southern | Tom Stanley | ASO-426 | (404)763-7266 |
| Southwest | Larry Young | ASW-422 | (817)740-3493 |
| Western Pacific | Margaret Miller | AWP-460 | (310)297-1095 |

## APPENDIX 2. LIST OF ABBREVIATIONS AND ACRONYMS

AAC-400 FAA Logistics Center, Mike Monroney Aeronautical Center

AAC-900 FAA Academy, Mike Monroney Aeronautical Center

AAC-940 Airway Facilities Branch, FAA Academy

AAF-1 Associate Administrator for Airway Facilities

ACN-100 Communications/Navigation/ Surveillance Division, FAA Technical Center

AHT-400 Airway Facilities Training Program Division

ANA-1 Program Director for Automation

ANA-100 Automation Engineering Division

ANA-120 Associate Program Manager for Engineering, Maintenance Automation Program

ASE-200 Communications System Engineering Division

ASU-1 Office of Acquisition Support

ASU-300 Contracts Division

ASU-310 Air Traffic Control/Flight Information Branch, Contracts Division

ANW-100 Weather Sensors Division

ANS-200 Facilities Integration Division, NAS Transition and Implementation Service

ANR-100 Surveillance Engineering Division

ANN-100 Navigation and Landing Engineering Division

ANW-100 Weather and Flight Service Systems Engineering Division, Program Director for Weather and Flight Service Systems

AHT-300 Requirements and Liaison Division, Training and Higher Education

| | |
|---|---|
| AMCC | ARTCC Maintenance Control Center |
| ASM-1 | Systems Maintenance Service |
| ASM-400 | National Automation Engineering Field Support Division, Systems Maintenance Service |
| ASM-600 | National Engineering Field Support Division |
| ASM-260 | Operations Program Branch, Maintenance Operations Division |
| ASM-300 | Telecommunications Management and Operations Division, Systems Maintenance Service |
| AC | Alternating Current |
| amp. | Ampere |
| ARTCC | Air Route Traffic Control Center |
| AT | An IBM Personal Computer model |
| ATC | Air Traffic Control |
| BPS | Bits per second |
| CAI | Contractor Acceptance Inspection |
| CBI | Computer-Based Instruction |
| CCB | Configuration Control Board |
| CCD | Configuration Control Decision |
| CO | Contracting Officer |
| COTS | Commercial Off-the-Shelf |
| CPMIS | Centralized Personnel Management Information System |
| CPU | Central Processing Unit |
| DAC | Days After Contract |
| DATA MUX | Data Multiplexer |

| | |
|---|---|
| DCE | Data Communications Equipment |
| DO | Delivery Order |
| DOS | Disk Operating System |
| DOT | Department of Transportation |
| DPW | Display Processing Work Station |
| DRR | Deployment Readiness Review |
| EEM | Electronic Equipment Modification |
| EGA | Enhanced Graphics Adapter |
| FAA | Federal Aviation Administration |
| FMDT | Fixed Maintenance Data Terminal |
| GENOT | General Notices |
| GMCC | GNAS Maintenance Control Center |
| GPW | General purpose work station |
| GNAS | General NAS |
| GWS | Graphics work station |
| Hz | Hertz |
| HVAC | Heating ventilating and air conditioning |
| IBM | International Business Machines |
| ILSP | Integrated Logistic Support Plan |
| IMCS | Interim Monitor and Control Software |
| in. | Inch |
| JAI | Joint Acceptance Inspection |
| KB | Kilobyte |
| LABS | Leased A and B service |

| | |
|---|---|
| LCN | Logistic Control Number |
| LRU | Line Replaceable Unit |
| LAN | Local Area Network |
| lbs. | Pounds |
| LSA | Logistic Support Analysis |
| ma | Milliampere |
| MB | Megabyte |
| ME CCB | Maintenance Engineering Configuration Control Board |
| MCC | Maintenance Control Center |
| MCS | Monitor and Control Software |
| MDT | Maintenance Data Terminal |
| MLAD | MultiLAN Attachment Device |
| MHZ | Megahertz |
| MMS | Maintenance Management System |
| MPS | Maintenance Processor Subsystem |
| MS-BASIC | Microsoft-Beginners All Purpose Symbolic Instruction Code |
| MS-DOS | MicroSoft-Disk Operating System |
| msl | Mean Sea Level |
| NAILS | National Airspace Integrated Logistic Support |
| NAILSMT | NAILS Management Team |
| NAPRS | National Airspace Performance Reporting System |
| NARACS | National Radio Communications Service |
| NAS | National Airspace System |

| | |
|---|---|
| NOTAM | Notice to Airmen |
| NSN | National Stock Number |
| OATS | Office Automation Technology and Services |
| OJT | On-the-Job Training |
| OPS | Operations |
| ORD | Operational Readiness Demonstration |
| OT&E | Operational Test and Evaluation |
| PA | Project Authorization |
| PC | Personal Computer |
| PDS | Proficiency Development Specialist |
| PIP | Project Implementation Plan |
| PMDT | Portable Maintenance Data Terminal |
| PSRB | Program Status Review Board |
| QA | Quality Assurance |
| RAM | Random Access Memory |
| Rel. | Relative |
| RENOT | Regional Notices |
| RGB | Red Green Blue |
| RGBI | Red Green Blue Intensity |
| RMMS | Remote Maintenance Monitoring System |
| RMS | Remote Monitoring Subsystem |
| RMSC | Remote Monitoring Subsystem Concentrator |
| SDLC | Synchronous Data Link Control |
| SEI | System Engineering and Integration |

| | |
|---|---|
| SPB | Site Program Bulletin |
| SS | System Specification |
| STAT MUX | Statistical Multiplexer |
| STP | Subsystem Training Plan |
| TBD | To Be Determined |
| TBS | To Be Specified |
| TIG | Telecommunications Interface Group |
| TMDT | Transportable Maintenance Data Terminal |
| TO | Technical Officer |
| VA | Volt-Amps |
| VAC | Volts Alternating Current |
| VGA | Video Graphics Array |