ORDER

6190.11

ARTS IIA INTERFACE WITH MODE S/ASR-9

PROJECT IMPLEMENTATION PLAN (PIP)

November 19, 1990

DEPARTMENT OF TRANSPORTATION
FEDERAL AVIATION ADMINISTRATION

Distribution: A-W (NA/SE/LG/TR/TM/TP)-3; A-Z-3; A-X (AF/AT)-3; A-FAT-0 (LTD); ZAF-600

Initiated By: ANA-140

RECORD OF CHANGES

DIRECTIVE NO. 6190.11

CHANGE TO BASIC	SUPPLEMENTS			OPTIONAL USE	CHANGE TO BASIC	SUPPLEMENTS			OPTIONAL USE

FAA Form 1320-5 (5-68) SUPERSEDES PREVIOUS EDITION

C FAA AC 72-6744

FOREWORD

This order transmits the Project Implementation Plan (PIP) for the ARTS IIA Interface with Mode S/ASR-9 Project. It provides management direction and technical guidance to all levels of the Federal Aviation Administration (FAA) with responsibility for the orderly implementation of the Mode S/ASR-9 Line Adapter (MALA) kits at all ARTS IIA terminal sites scheduled to receive ASR-9 or Mode S radars. The procedures and responsibilities in this order were developed using current agency directives. This order establishes program management, project implementation policy, and responsibilities governing the activities of organizations, and also identifies and describes specific events and activities to be accomplished for project implementation.

for Terry R. Hannah
Program Director for Automation

TABLE OF CONTENTS

Page No.

CHAPTER 1. GENERAL 1

1. Purpose 1
2. Distribution 1
3. Definitions 1
4. Authority to Change this Order 3
5. Applicability 3
6. Duration 3
7.-19. Reserved 3

CHAPTER 2. PROJECT OVERVIEW 5

20. Synopsis 5
21. Purpose 6
22. History 6
23.-29. Reserved 7

CHAPTER 3. PROJECT DESCRIPTION 9

30. Functional Description 9
Figure 3-1. ARTS IIA and ASR-9/ATCBI 11
Figure 3-2. ARTS IIA and ASR-9/Mode S 12
Figure 3-3. ARTS IIA and Mode S 13
Figure 3-4. Primary/Secondary MALA Logical Interconnection 15
Figure 3-5. Functional Flow - ASR-9 Configuration 16
Figure 3-6. Functional Flow - Mode S Configuration 17
31. Physical Description 19
33. Interfaces 20
34.-39 Reserved 20
Figure 3-7. SCIP to ARTS IIA EIA-RS-449 Interface 21
Figure 3-8. ARTS IIA to Modem EIA-RS-530 Interface 22
Figure 3-9. RS-232 Option Select Logic 23

CHAPTER 4. PROJECT SCHEDULE AND STATUS 25

40. Project Schedule and Status 25
41. Milestone Schedule Summary 25
42. Interdependency and Sequence 25
43.-49. Reserved 25

CHAPTER 5. PROJECT MANAGEMENT 27

50. Project Management, General 27
51. Project Contacts 27
52. Project Coordination 27
53. Project Responsibility Matrix 38
54. Project Managerial Communications 39
55. Implementation Staffing 39
56. Planning and Reports 39
57. Applicable Documents 40
58.-59 Reserved 40

TABLE OF CONTENTS

	Page No.
CHAPTER 6. PROJECT FUNDING	41
60. Project Funding Status, General	41
61.-69. Reserved	41
CHAPTER 7. DEPLOYMENT	43
70. General Deployment Aspects	43
71. Site Preparation	43
72. Delivery	44
73. Installation Plan	44
74. First Site Versus Follow-on Site Requirements	45
75.-79. Reserved	46
CHAPTER 8. VERIFICATION	47
80. Factory Verification	47
81. Checkout	48
Figure 8-1. MALA Verification Program (Contractor Installation)	49
82. Contractor Integration	50
83. Contractor Acceptance Inspection (CAI)	50
84. FAA Integration Testing	51
85. Shakedown and Changeover	51
86. Joint Acceptance Inspection (JAI)	54
87.-89. Reserved	54
CHAPTER 9. INTEGRATED LOGISTICS SUPPORT (ILS)	55
91. Training	55
92. Support Tools and Test Equipment	55
93. Supply Support	55
94. Documentation	55
95. Equipment removal	56
96. Facilities	56
97.-99. Reserved	56
CHAPTER 10. ADDITIONAL PROJECT IMPLEMENTATION PLAN ASPECTS	57
100. Configuration Management	57
APPENDIX 1. Installation Schedules	1
APPENDIX 2. Project Contacts	1
APPENDIX 3. Referenced Documents	1

CHAPTER 1. GENERAL

1. PURPOSE. The Project Implementation Plan (PIP) provides management direction and technical guidance in the implementation of the ARTS IIA Interface with Mode S/ASR-9 project to all levels of the FAA from project inception through commissioning. The order provides overall guidance and direction to involved organizations by establishing program management and project implementation policy, and defining organizational roles and responsibilities in support of project implementation. In addition to providing overall guidance and direction for implementation, the order also identifies and describes specific events and activities to be accomplished.

2. DISTRIBUTION. This order is distributed to the branch level within the Office of the Program Director for Automation and the Air Traffic Systems Management and the NAS Systems Engineering, Logistics, and Air Traffic Plans and Requirements Services; branch level at the FAA Technical Center and the Mike Monroney Aeronautical Center; branch level of the regional Airway Facilities and Air Traffic divisions; and unlimited distribution to Air Traffic field offices with ARTS IIA automation systems.

3. DEFINITIONS.

a. Terms.

(1)	A2.06	Level of the ARTS IIA operational software currently being fielded and which will be enhanced with the A2.07 level software.
(2)	A2.07	ARTS IIA A2.06 level operational software modified to accept and process beacon data from the ASR-9 and Mode S radars.
(3)	LSI 2/40	Computer Automation Inc. designation for the ARTS IIA microprocessor.
(4)	Mode S	Mode Select - Monopulse beacon interrogator
(5)	TPX-42	ATC system used at low activity airports.
(6)	UNISYS	Corporate name (i.e., contractor)

b. Acronyms.

(1)	ACT	FAA Technical Center
(2)	AF	Airway Facilities
(3)	APC	Acquisition Processing Cabinet
(4)	APML	Associate Program Manager for Logistics
(5)	ASR	Airport Surveillance Radar
(6)	ARTS IIA	Automated Radar Terminal Systems type IIA
(7)	AT	Air Traffic
(8)	ATC	Air Traffic Control
(9)	ATCBI	Air Traffic Control Beacon Interrogator
(10)	BRTQC	Beacon Real Time Quality Control
(11)	CA	Conflict Alert

(12)	CAI	Contractor Acceptance and Inspection
(13)	CCB	Configuration Control Board
(14)	CCD	Configuration Control Decision
(15)	CD	Common Digitizer
(16)	CM	Configuration Management
(17)	CO	Contracting Officer
(18)	CRF	Change Request Form
(19)	CPU	Central Processing Unit
(20)	DCE	Data Communication Equipment
(21)	DDAS	Decoding Data Acquisition Subsystem
(22)	DIP	Dual-in-line Package
(23)	DR&A	Data Reduction and Analyses
(24)	DRR	Deployment Readiness Review
(25)	DTE	Data Terminal Equipment
(26)	DTM	Digital Terrain Map
(27)	DT&E	Development, Test, and Evaluation
(28)	EEM	Electronic Equipment Modification
(29)	EIA	Electronics Industry Association
(30)	EXCOM	Executive Committee
(31)	FCA	Functional Configuration Audit
(32)	F/W	Firmware
(33)	GFE	Government Furnished Equipment
(34)	HCM	Hardware Configuration Management
(35)	H/W	Hardware
(36)	HDR	Hardware Discrepancy Report
(37)	IC	Integrated Circuit
(38)	ICD	Interface Control Document
(39)	I/F	Interface
(40)	ILS	Integrated Logistics Support
(41)	ILSP	Integrated Logistics Support Plan
(42)	IOC	Initial Operational Capability
(43)	JAI	Joint Acceptance and Inspection
(44)	LED	Light Emitting Diode
(45)	MALA	Mode S/ASR-9 Line Adapter
(46)	MASIM	Mode S/ASR-9 Simulator
(47)	MDDF	Materiel Delivery Data File
(48)	MSAW	Minimum Safe Altitude Warning
(49)	MTP	Master Test Plan
(50)	NAILS	National Airspace Integrated Logistics Support
(51)	NAILSMT	NAILS Management Team
(52)	NAS	National Airspace System
(53)	NOAA	National Oceanographic and Atmospheric Administration
(54)	ORD	Operational Readiness Demonstration
(55)	OT&E	Operational Test and Evaluation
(56)	PAT&E	Production Acceptance Test and Evaluation
(57)	PC	Printed Circuit
(58)	PCA	Physical Configuration Audit
(59)	PDSR	Program Director Status Review
(60)	PIP	Project Implementation Plan
(61)	PROM	Programmable Read Only Memory
(62)	PM	Program Manager
(63)	PTR	Program Technical Report
(64)	RADS	Radar Alphanumeric Displays Subsystem

(65)	RAM	Random Access Memory
(66)	RIG	Regional Integration Group
(67)	SCIP	Surveillance Communication Interface Processor
(68)	SCM	Software Configuration Management
(69)	SEI	System Engineering and Integration
(70)	SOST	System Onsite Test
(71)	SPB	Site Program Bulletin
(72)	S/W	Software
(73)	TELCO	Telephone Company
(74)	TIG	Terminal Integration Group
(75)	TIM	Technical Interchange Meetings
(76)	TO	Technical Officer
(77)	TOR	Technical Onsite Representative
(78)	TPRB	Test Policy and Planning Review Board
(79)	TRACON	Terminal Radar Approach Control
(80)	TRS	Target Report Store
(81)	TSG	Training Scenario Generator
(82)	TTY	Teletypewriter
(83)	T&E	Test and Evaluation
(84)	UDS	Universal Data Set
(85)	Vdc	Voltage, Direct Current

4. AUTHORITY TO CHANGE THIS ORDER. This order is issued under the authority of the Program Director for Automation, ANA-1; the Director, Air Traffic Plans and Requirements Service, ATR-1; and the Director, Office of Air Traffic Systems Management, ATM-1. The authority to issue changes to this order is reserved for the Program Director for Automation, ANA-1.

5. APPLICABILITY. The information contained herein shall be used by FAA offices, services, regions, centers (Mike Monroney Aeronautical Center and ACT), and terminal sites for accomplishing their support of the ARTS IIA Interface with Mode S/ASR-9 project implementation activities. The guidance and schedule information contained herein shall form the framework for these organizations to perform more detailed planning activities required at the regional and field levels. Deviations from this order must be approved by the Program Director for Automation, ANA-1.

6. DURATION. The duration of this program shall continue through commissioning of the last ARTS IIA site at the A2.07 level operational software.

7.-19. RESERVED.

CHAPTER 2. PROJECT OVERVIEW

20. SYNOPSIS.

a. The ARTS IIA Interface (I/F) with Mode S/ASR-9 project was initiated to support NAS Plan objectives for improved surveillance capabilities in the intermediate term. Satisfying NAS Plan objectives required acquisition and deployment at air traffic control (ATC) facilities of new and more capable surveillance systems such as the airport surveillance radar-9 (ASR-9) and Mode Select (Mode S) beacon radar. Deployment of these new radars required the development of a means to interface the ARTS IIA automation system to these surveillance radar systems. UNISYS, hereafter referred to as the contractor, is currently under contract to develop and manufacture Mode S/ASR-9 Line Adapter (MALA) modification kits and A2.07 level operational software to interface the ARTS IIA systems with the ASR-9 and Mode S radars. A MALA kit consists of two MALA boards for installation within the ARTS IIA, a site spare MALA board, a connector panel and necessary cables, and change pages for technical instruction books. The contractor is under contract to manufacture 75 MALA kits for installation at ARTS IIA facilities scheduled to receive ASR-9 and/or Mode S surveillance systems and at non-operational sites (i.e., ACT, FAA Academy, and the FAA Logistics Center). The contractor is also under contract to build 128 site adapted A2.07 level operational software tapes for implementation at all ARTS IIA sites. Twenty (20) additional MALA boards will also be manufactured by the contractor and provided to the FAA Logistics Center as spares.

b. Project implementation encompasses hardware and software. MALA kit hardware and A2.07 operational software is to be implemented at ARTS IIA sites scheduled to receive ASR-9 and/or Mode S surveillance systems and at the non-operational sites. These sites are referred to as MALA kit sites. All of the remaining ARTS IIA sites are to be implemented with only A2.07 operational software and are referred to as non-kit sites. To accommodate the transition of the software from the present baseline level A2.06 to the A2.07 level, the implementation will proceed as soon as MALA kits and A2.07 level operational software become available. This will be without regard to the availability at the site of the new interfacing surveillance systems. The software is designed to operate in the absence of the new interfacing surveillance system and there is a benefit in reducing the period of concurrent maintenance of two software levels. For the A2.07 level operational software to function at the individual sites, unique site dependent parameters must be added. The contractor is tasked with adding these unique parameters and with building site adapted A2.07 level operational tapes for each ARTS IIA site. The majority of site adaptation parameter changes are expected to result from the addition of new radars or relocation of existing radars. Once built, all A2.07 level operational tapes, whether associated with a MALA kit or non-kit sites, shall be delivered by the contractor to ATR-412 at the ACT where they will undergo verification.

c. Project deliveries shall commence with delivery of the first MALA kit and modified system diagnostics software to the ACT for integration and shakedown testing. Operational software delivered with the first MALA kit shall be built by the contractor using parameter values contained in the Universal Data Set (UDS). Upon successful completion of integration and shakedown testing the contractor shall build and deliver an operational tape adapted for the Atlantic City terminal radar approach control (TRACON). Once verified, the MALA kit, system diagnostics software and site adapted operational software shall be delivered and installed by the

contractor at the keysite, Atlantic City TRACON. Successful completion of keysite testing is a prerequisite for implementation of MALA kits and A2.07 level operational software at follow on sites. Concurrent with keysite delivery, MALA kits and site adapted operational software will also be delivered to the FAA Academy to support training and to the FAA Logistics Center (hot system) to support their requirements. All 128 site adapted A2.07 level operational software tapes will be delivered by the contractor to ATR-412 at the ACT for verification. Verified software will be packaged and shipped by ATR-412 to their respective site in accordance with the Materiel Delivery Data File (MDDF). MALA kits will be shipped to the FAA Logistics Center by the contractor following FAA acceptance of the hardware and firmware during factory testing. To reduce MALA kit installation schedule impact, airway facilities (AF) personnel shall request shipment of the MALA hardware from the FAA Logistics Center with sufficient lead time to allow for arrival of the MALA hardware at the site prior to arrival of the A2.07 operational software from the ACT.

d. MALA kit installation at the first site within each region is the responsibility of the contractor. AF and AT shall ensure availability of the MALA kit, modified system diagnostics, and A2.07 level software at the site prior to arrival of the contractor. The purpose for having the contractor install these kits is to afford training for FAA personnel tasked with installing the remainder of the kits. Subsequent field installations of MALA kits is an AF responsibility. The A2.07 level software is designed to allow for operation of the ARTS IIA with or without the MALA kit installed and in the absence of the ASR-9 and/or Mode S radar(s). This has no effect on AT traffic operations as this is completely transparent to a controller. However, field support is benefited in that only one level of software will need to be maintained. At those sites at which the new radar(s) is installed, the MALA kit and A2.07 level operational software shall be installed, tested, and commissioned. At those sites awaiting implementation of the new sensor(s), the MALA kit and A2.07 level operational software will be installed, tested and commissioned with the software functions associated with the interface disabled. Once the new radar(s) become available, the software functions associated with the interface will be enabled.

e. Non-kit site installation of the A2.07 level operational software is the responsibility of AT site personnel. The A2.07 level software design allows for operation of the ARTS IIA without a MALA kit installed. This is accomplished by disabling the software functions associated with the interface. There is no effect on AT operations as this is completely transparent to a controller. These sites will be installed, tested, and commissioned with the software interface functions disabled.

21. PURPOSE. The improvement of terminal systems is a fundamental objective of the NAS Plan. The ARTS IIA I/F with Mode S/ASR-9 project satisfies objectives of the NAS Plan by providing ARTS IIA facilities with the capability to access data from new and enhanced surveillance systems planned as part of the NAS modernization. Specifically, the MALA kit and the A2.07 level operational software will allow ARTS IIA facilities to interface with the new ASR-9 surveillance radar and Mode S beacon radar.

22. HISTORY. UNISYS was awarded two contracts in the terminal area: the "ARTS II Enhancement" contract (DTFA01-82-C-10008) in 1982 and subsequently the "ARTS IIA Upgrade" contract (DTFA01-85-C-00040) in 1985. The scope of the first contract was modified (Modification #13) in September 1985 to include both prototype hardware and

software to interface the ARTS IIA system to the new ASR-9 radar. This work was completed in September 1986 with a successful demonstration at the contractors facility in Paoli, Pa. The second contract was subsequently modified (modifications 5, 9, 11, and 13) to interface the ARTS IIA System to the Mode S radar and provide production quantities of the prototype hardware for installation at 67 operational ARTS IIA sites and 8 non-operational sites. The hardware consists of two MALA boards, one spare board, a connector panel, and the necessary cable for each of the operational and non-operational sites. The contract also calls for the delivery of 128 site adapted operational software (i.e., release A2.07), 20 MALA boards to be used by the FAA Logistics Center as spares, and change pages to the instruction manual. The contract calls for the delivery of the hardware and software to be complete in February 1992.

23.-29. RESERVED.

CHAPTER 3. PROJECT DESCRIPTION

30. FUNCTIONAL DESCRIPTION. A description of the Mode S/ASR-9 interface function, system composition, and functional flows are contained in the following paragraphs.

a. Mode S/ASR-9 Interface Function. The ARTS IIA automation system currently receives analog data from existing terminal radars. With the arrival of the ASR-9 and Mode S radars, a digital data interface will be required. This new digital data interface will be accomplished by employing both hardware and software in the ARTS IIA automation system. The hardware consists of a set of custom designed MALA printed circuit (PC) boards which fits into existing slots in the chassis of the LSI 2-40 computer. The MALA board is designed to interface with two input data channels each consisting of up to three serial digital data links. The MALA board receives the digital data and then reformats the data into the standard ARTS IIA target report format. Two MALA boards will be installed in each acquisition processing cabinet (APC) for redundancy with the primary interface being designated as MALA A and the secondary as MALA B. The ARTS IIA operational software will be modified with the addition of a new "Interface Driver." The driver will receive the target report from the MALA board and transfer the report to the system target store where it is processed like any other target data. The man-machine interface will provide the capability to select the ARTS IIA mode (i.e., automatic or manual) and the source of the radar data, i.e., primary MALA, secondary MALA, or decoding data acquisition subsystem (DDAS) via a supervisory keyboard entry. (The DDAS will be retained as a backup to the digital data.) Teletypewriter (TTY) messages will be used to inform AF technician of the interface mode selected (i.e., automatic or manual), the interface status and the input source status. Light emitting diodes (LED) on the MALA boards and local firmware diagnostics provide the AF technician with visual indications of the functional tests executed and the results.

b. System Composition. One of three possible basic system configurations are available at ARTS IIA facilities scheduled to receive the new radar systems. They are: ARTS IIA with an ASR-9 and air traffic control beacon interrogator (ATCBI), ARTS IIA with an ASR-9 and Mode S, and ARTS IIA with Mode S and radar other than ASR-9. Figures 3-1, 3-2, and 3-3 depict these configurations.

(1) Figures 3-1 and 3-2 depict configurations in which the ASR-9 primary radar is installed with the existing ATCBI 3/4/5 equipment and Mode S beacon radar system respectively. In both of these configurations, the ARTS IIA receives synchronous target information from the surveillance communications interface processor (SCIP), a subsystem of the ASR-9 radar system. Each of the two MALA's receives digital target data from its associated SCIP across its primary input data channel. SCIP A is the primary input data channel for MALA A (primary); SCIP B is the primary input data channel for MALA B (secondary). For redundancy, the primary and secondary MALA cards are interconnected via ribbon cables which mate to the back edge of the cards. This interconnection allows the primary MALA to receive SCIP B input data via the secondary MALA. Similarly, the secondary MALA is provided SCIP A input data via the primary MALA. Figure 3-4 shows a logical depiction of this interconnection. The MALA monitors its primary input data channel and automatically switches to its secondary input data channel if the data stream is found to contain errors. Teletypewriter messages are generated to inform the AF technician when a channel switch occurs and the reason for the switch. In addition to the monitoring performed by the MALA, the ARTS IIA operational software monitors the status of input data received from the primary MALA. If input data received from the primary

MALA is determined to contain errors, a switch of the beacon input data source is initiated. Switching is dependent on the current ARTS IIA mode, which is selected via supervisory keyboard entry. In the automatic mode, the switch is to the secondary MALA. If input data from the secondary MALA is subsequently determined to contain errors, a switch to the DDAS is performed. In the manual mode, the beacon input data source must be selected via a supervisory keyboard entry.

(2) Figure 3-3 depicts the configuration in which a Mode S beacon radar system is installed at sites with an ASR-7 or ASR-8 primary radar. In this configuration, the ARTS IIA interfaces to the Mode S system through synchronous modems. Only the primary MALA receives Mode S input data directly. The secondary MALA receives the data via the primary MALA. System operation in this configuration is similar to that described above with the exception that no switching to a secondary input data channel is performed within the MALA, since there is only one input source for each MALA. Figure 3-4 shows a logical depiction of this interconnection.

c. Functional Flows. The functional flow of the ARTS IIA interface with the ASR-9 and Mode S radars is shown in figures 3-5 and 3-6. The interface is accomplished by two functional entities: 1) MALA, and 2) ARTS IIA operational software. The following paragraphs identify and describe the major functions performed by the MALA and define the data flows between these functions.

(1) Mode S/ASR-9 Line Adapter performs four major functions: 1) message acquisition, 2) message processing, 3) error processing, and 4) local diagnostics.

(a) Message Acquisition. Messages are received by the MALA on up to three digital data links as a series of common digitizer (CD) format message fields. The MALA services each of the available data links, gathering the component fields of each message to recreate the complete message. As part of the CD protocol, idle messages are received by the MALA. At least one idle message precedes and one follows each message transmitted. Idle messages are also transmitted when no other data is being transmitted. The MALA receives the following message types: 1) Beacon Target Report Messages, 2) Beacon Real Time Quality Control (BRTQC) Messages, 3) Sector Mark Messages, 4) System Status Messages, and 5) Search Messages. All other message types are considered illegal.

(b) Message Processing. Message processing is dependent upon message type.

1 Beacon target report messages are reformatted into ARTS IIA format target reports and forwarded to the operational software.

2 BRTQC messages are used as a confidence check on proper radar functioning. Checks are performed on the BRTQC messages and, if errors are detected, an error indication is forwarded to the operational software. BRTQC messages are reformatted into ARTS IIA format target reports and forwarded to the operational software.

3 Sector mark messages are converted to the corresponding ARTS IIA sector count message and forwarded to the operational software. Sector count messages are the primary source for scheduling within the ARTS IIA and if they are not received from the radar, the MALA generates synthetic sector marks.

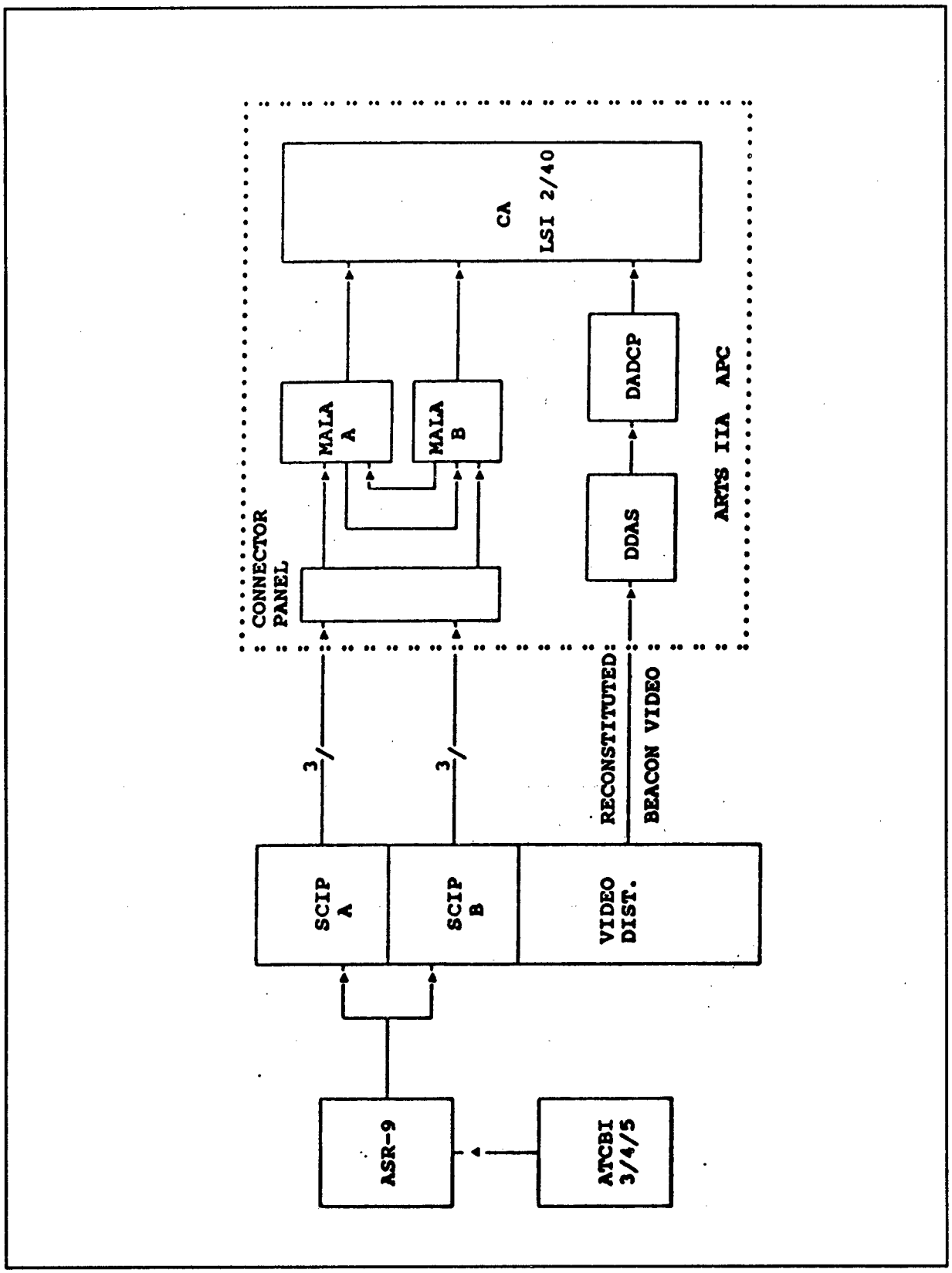

FIRGURE 3-1. ARTS IIA AND ASR-9/ATCBI

FIGURE 3-2. ARTS IIA AND ASR-9/MODE S

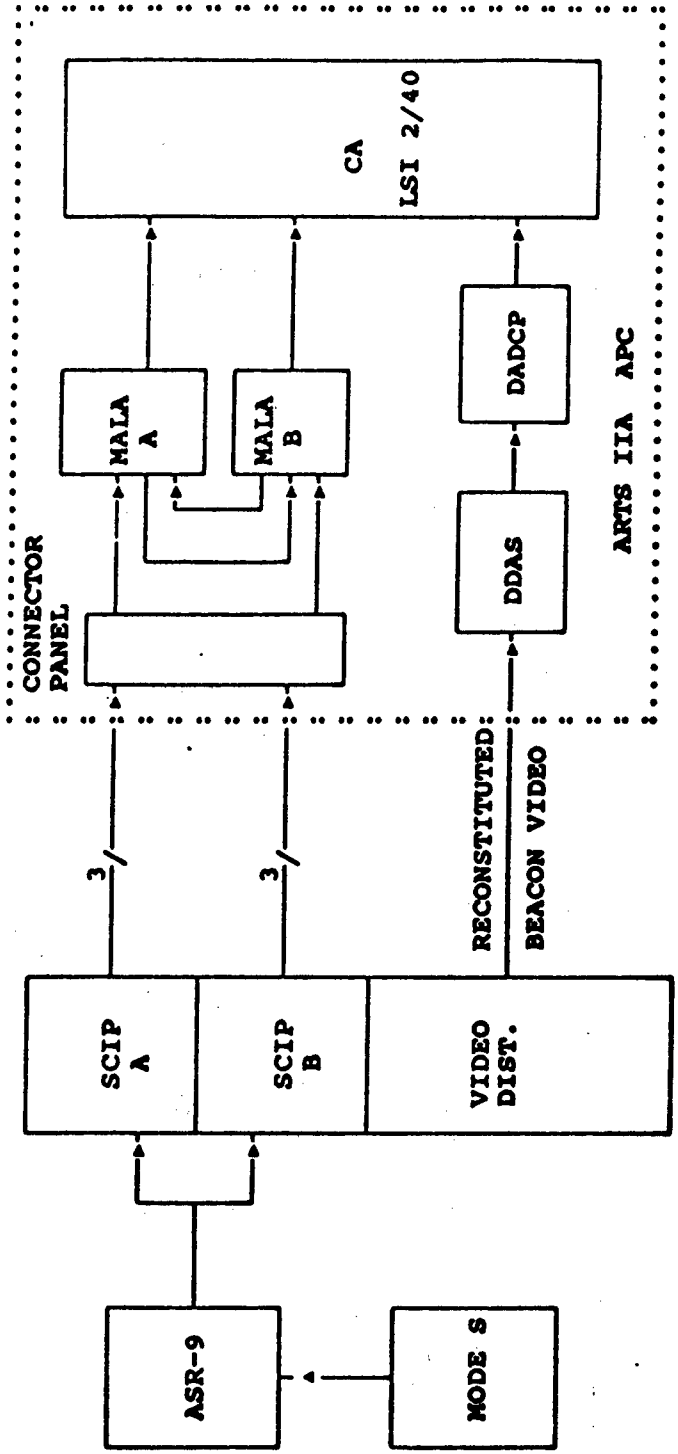

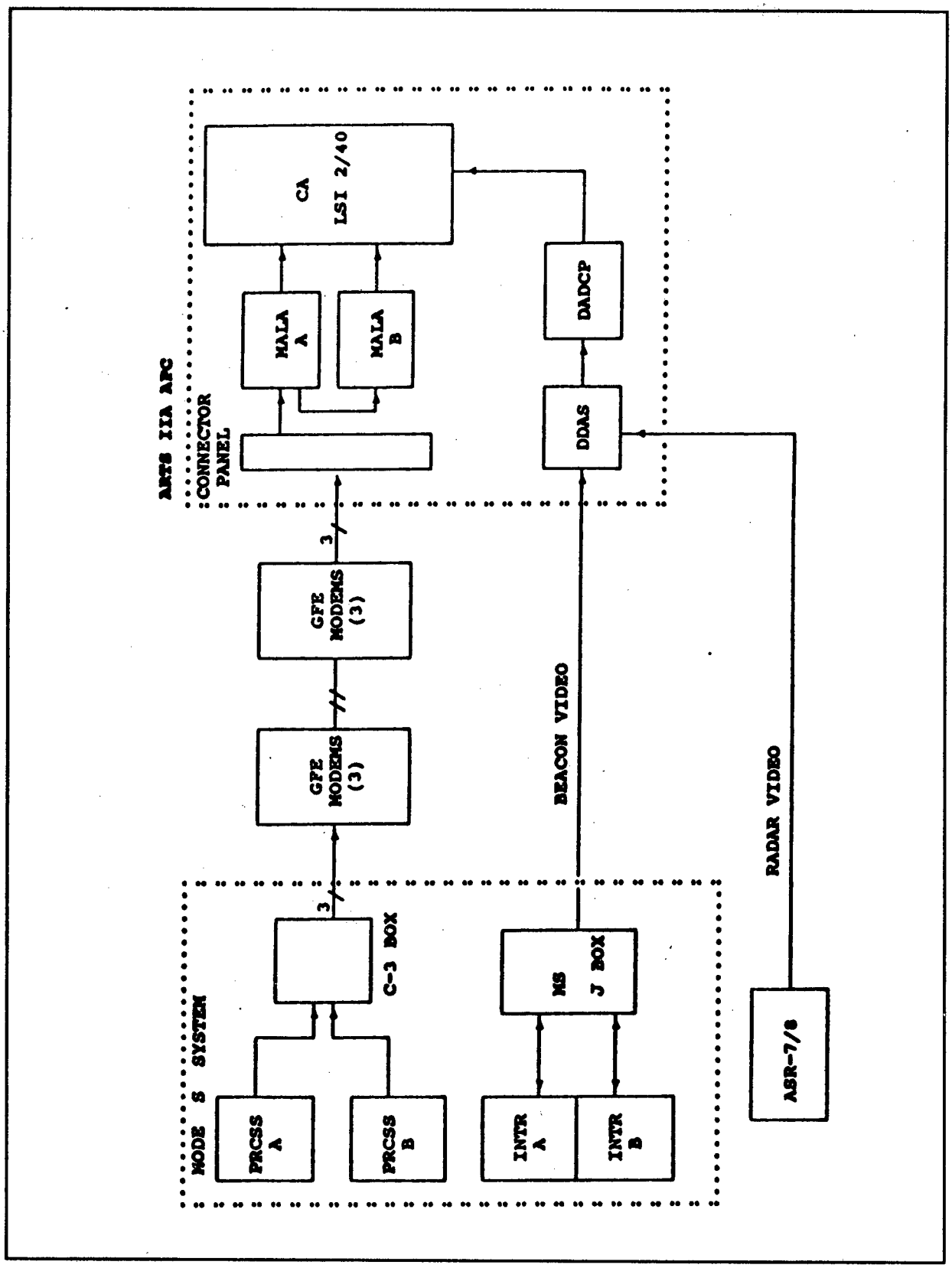

FIGURE 3-3. ARTS IIA AND MODE S

4 The processing of system status messages is dependent on the radar configuration (i.e., Mode S or ASR-9). In a Mode S configuration, the status message is examined for an indication that Mode S is inoperable. In such an event, a fatal error message is forwarded to the operational software to be used as the basis for switching beacon input source. In an ASR-9 radar configuration, the message is examined to determine if the input data channel in use is unavailable. When the primary channel is in use and becomes unavailable, an automatic switch to the secondary channel (either MALA can be designated as primary) is effected and a non-fatal error message indicating the input data channel switch is forwarded to the operational software for output to the TTY. When the secondary input data channel is in use and becomes unavailable, a fatal error message is forwarded to the operational software to be used as the basis for switching to an alternate beacon input data source. Switching of the beacon input data source is dependent on the current mode (i.e., automatic or manual) and will not occur if the system is in the manual mode. The AF technician is informed, via a TTY message, of a switch to an alternate beacon input data source and the reason for the switch.

5 Search messages are not used by the ARTS IIA and are therefore discarded.

(c) Error Processing. The error processing function provides the capability to detect, process and report faults. Fault detection may reside in hardware, firmware, or software and falls into three general categories: receive channel errors, message errors, and line adapter errors. Errors are classified as fatal or non-fatal. Fatal errors are those faults which prohibit the MALA from providing usable input data to the operational software. Faults that do not impair this capability or faults for which the MALA can take corrective action are considered non-fatal. Receive channel errors are detected by hardware, reported to firmware and subsequently reported to the operational software if established thresholds are exceeded. Message error detection is accomplished by both hardware and firmware. The processing of message errors is dependent upon the message type being processed. This may include signaling a fault to the operational software if thresholds are exceeded, or switching to the secondary MALA if faults are detected in either the SCIP or the Mode S. Line adapter errors fall into two basic categories: errors which are detected by the operational software and errors which are detected by the MALA. Line adapter errors detected by the operational software include errors such as interrupt timeout and initialization timeout. MALA errors detected by firmware include faults such as bus errors and address errors. TTY printouts are provided for all fatal errors detected and as a result of internal MALA switching.

(d) Local Diagnostics. Local diagnostics are provided to allow maintenance personnel the ability to perform local tests of various internal functions on the MALA. Diagnostics include: 1) Reset/Status Test, 2) Central Processing Unit (CPU) Self Test, 3) PROM Checks Test, 4) Random Access Memory (RAM) Write/Verify Test and, 5) Bus Error Test. Tests may be initiated locally by maintenance personnel when the MALA is in an off-line mode or by system diagnostics from the ARTS IIA when the MALA is on-line. The results of these tests are displayed on the on-board LED's when the diagnostics are initiated locally or to the TTY when initiated by system diagnostics. Several hardware features have been included on the MALA to support local diagnostics.

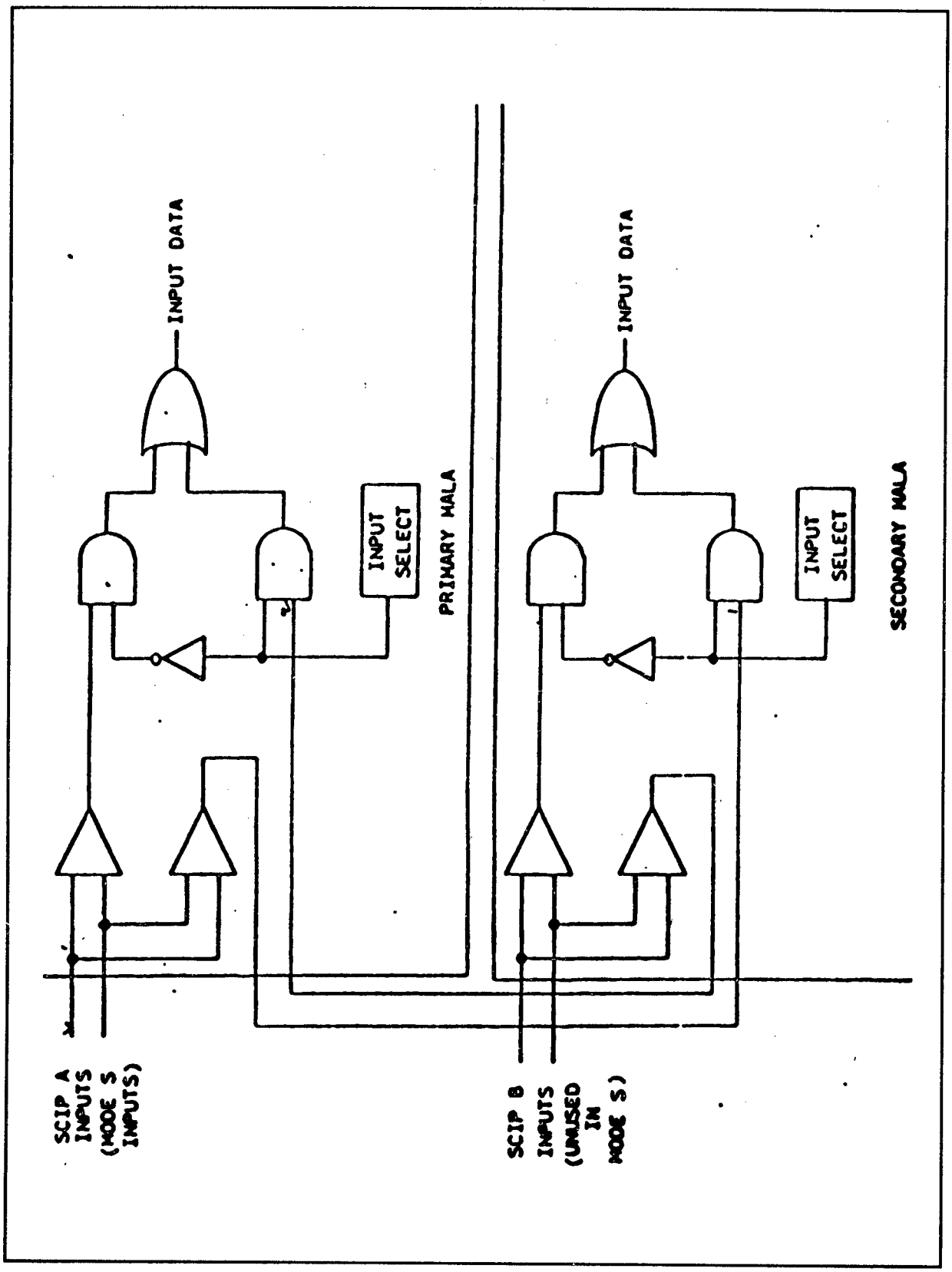

FIGURE 3-4. PRIMARY/SECONDARY MALA LOGICAL INTERCONNECTION

FIGURE 3-5. FUNCTIONAL FLOW: ASR-9 CONFIGURATION

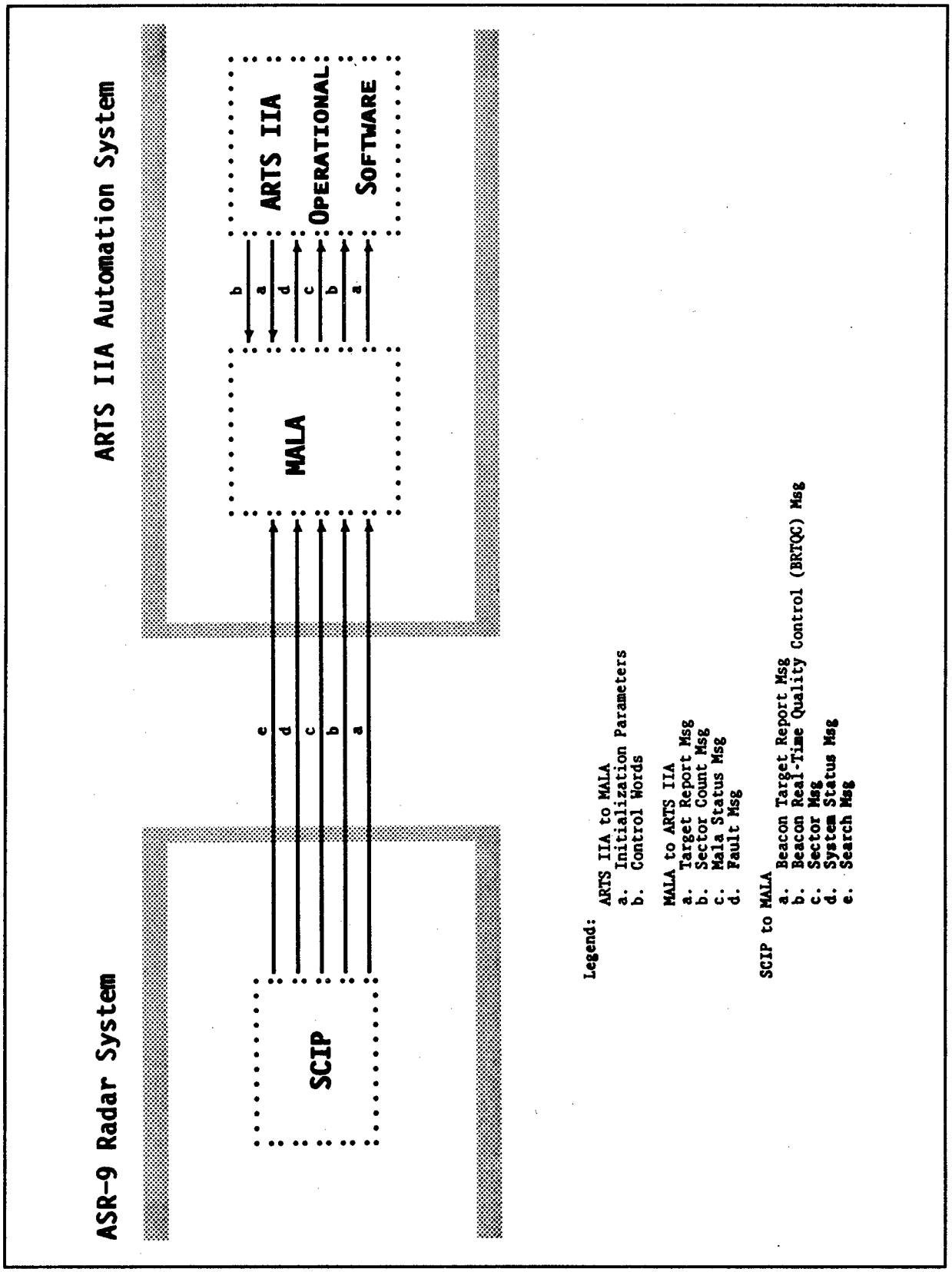

FIGURE 3-6. FUNCTIONAL FLOW: MODE S CONFIGURATION

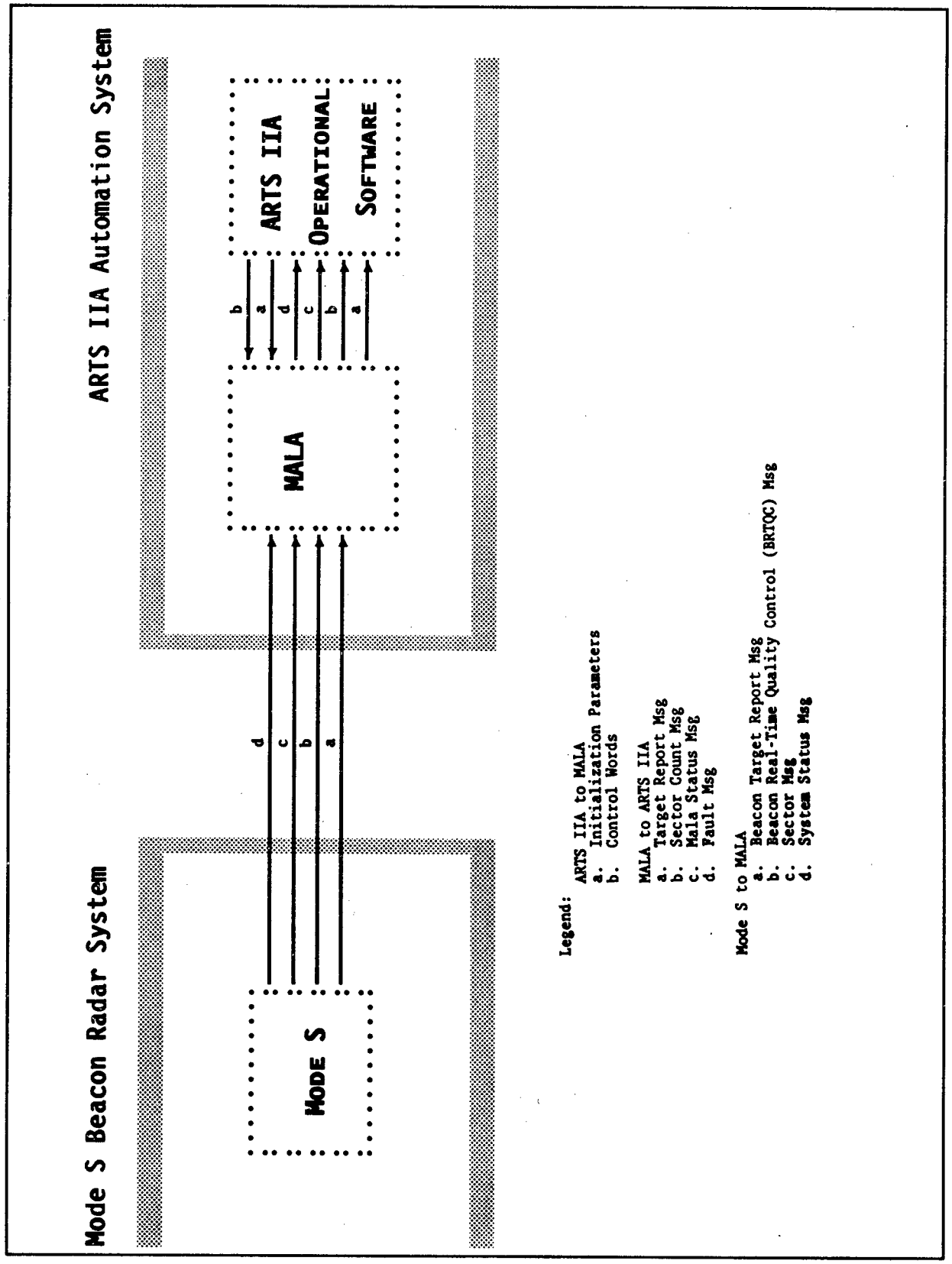

They include:

1 The local test push-button and dual-in-line package (DIP) switches on the MALA allow manual input and control over the local diagnostic functions. When depressed, the local test push-button initiates local diagnostics. The DIP switches allow AF technicians to select the test to be run and whether they are to be run continuously. The LED's display the number of the test being run and provide pass/fail information on each test.

2 Hardware logic on the MALA which provides the capability to test the interface to the LSI 2/40. The capability is provided to disconnect the LSI 2/40 input and output ports of the MALA from a MAXI-Bus and perform loopback testing.

3 Hardware logic on the MALA which provides the capability to perform loopback testing on each of three CD receivers.

(2) ARTS IIA Operational Software. The ARTS IIA operational software is modified to accommodate the new interface. The major modifications to the operational software included: 1) the addition of a interface driver designed to accept data from the current interface (i.e., MALA A or MALA B) and transfer the data to other system functions, 2) the capability to initiate automatic or manual system reconfiguration, and 3) enhancement of system diagnostics.

(a) Interface Driver. The ARTS IIA sends control words and initialization parameters to the MALA and receives target report messages, sector count messages, MALA status messages, and fault reports from the MALA. Control words issue commands to the MALA which affect its operational state. Initialization parameters establish system parameters required by the MALA and initiate its operation. The processing of messages received depend on the message type. Target report messages are appended with additional information and linked into the target report store (TRS). Sector count messages schedule processes within the ARTS IIA. MALA status messages coordinate data transfers and provide handshaking for control operations. Fault reports generate TTY messages for the AF technician and/or initiate system reconfiguration.

(b) System Reconfiguration. System reconfiguration is based on the system mode (i.e., automatic or manual) at the time a fatal fault is received from the MALA. The "automatic" system mode provides the capability for automatic selection of a predefined backup mode of operation without manual intervention. The "manual" system mode provides the capability for manual selection of the backup mode of operation. The "automatic" system mode is the primary mode of operation and is the mode in which the system is initialized. The "manual" system mode is essentially a maintenance mode of operation. System mode is selected via a supervisory keyboard entry. In the automatic mode there exists three levels of redundancy with the primary MALA used as the initial beacon input data source. In the event the primary MALA indicates a fatal fault the secondary MALA is automatically selected. In the event the secondary MALA also indicates a fatal fault, the DDAS is automatically selected. When the DDAS is selected, should the DDAS fail, beacon input data will be lost. In the manual mode, in the event of a fatal fault, no input source switching is performed. In this mode, input source selection must be accomplished via a supervisory keyboard entry. In either automatic or manual modes, fatal and non-fatal information messages and system reconfiguration data are reported to the AF technician via the TTY.

(c) System Diagnostics. MALA system diagnostics are contained within the ARTS IIA System Diagnostics and are designed to verify the interface between the MALA and the LSI 2/40. Tests provided include:

1 Configuration Test - verifies that the LSI 2/40 can reset and configure the MALA.

2 Interrupt Verification Test - verifies that the MALA can interrupt the LSI 2/40.

3 Sense Line Test - verifies that the MALA sense lines report properly.

4 I/O Wraparound Test - verifies that data can be transmitted across the interface accurately.

31. PHYSICAL DESCRIPTION. The MALA kit consists of: two MALA's to be installed in the APC, a site spare MALA board, a connector panel, ribbon cables for MALA to MALA connection, instruction manual change pages, and cables for only Mode S sites to connect the MALA to the modem. The physical characteristics of this equipment are described in the following paragraphs.

a. Sensor Physical Connection. The physical interface between the ARTS IIA and the radar system (ASR-9 or Mode S) is a connector panel located within the ARTS IIA APC. The connector panel is mounted behind the computer APC chassis. To allow easy access to all the card slots in the chassis, the connector panel mounts on two brackets which attach using existing holes within the APC. The connector panel can be mounted in either an upper or lower position. Push-push fasteners are used for easy removal without requiring the use of tools. The panel is normally mounted in the lower position behind the last two slots of the chassis, which are currently used. To access these slots the connector panel can be temporarily moved to the upper mounting position. In an ASR-9 system configuration, a set of six cables, three for SCIP A and three for SCIP B, supply the electrical interface from the connector panel to the SCIP. The connector panel contains six 37-pin data terminal equipment (DTE) interface connectors (male contacts and female shell): three for inputs from SCIP A and three for inputs from SCIP B. These cables are terminated in 37-pin data communications equipment (DCE) connectors (female contact and male shell). The input connectors for SCIP A are connected to the primary MALA via a twisted pair wire harness. The wire harness is hardwired to the back of the connector panel and has a connector on the other end which mates with a connector on the back edge of the MALA. The input connectors for SCIP B are similarly connected to the secondary MALA. In a Mode S system configuration, a set of three cables connect the ARTS IIA connector panel to the site modem patch panel. The cables are terminated at the modem patch panel with a 25-pin DTE interface connector (male contacts and female shell). The cables are terminated at the ARTS IIA end with 37-pin DCE interface connectors.

b. MALA Physical Characteristics. The Mode S/ASR-9 Line Adapter is a four-layer PC board (two signal layers, one power and one ground) measuring approximately 15" by 15" and containing approximately 175 integrated circuits (IC). The board plugs into the LSI 2/40 chassis and connects to the backplane via two 86-contact edge connectors. Two MALA's (designated as primary and secondary) are installed in each ARTS IIA APC. In an ASR-9 system configuration, the primary and secondary MALA's are interconnected via two ribbon cables which mate to connectors on the back edge of the MALA cards. This allows the primary MALA to receive SCIP B input data

via the secondary MALA. Similarly, the secondary MALA receives SCIP A input data via the primary MALA. Figures 3-1 and 3-2 depict the physical connections in an ASR-9 system configuration. In a Mode S system configuration, the primary and secondary MALA's are interconnected via a single ribbon cable. This allows the secondary MALA to receive Mode S data via the primary MALA. Figure 3-3 depicts the physical interconnections in a Mode S system configuration.

32. SYSTEM REQUIREMENTS. The MALA kit places no power usage or heat dissipation requirements on the facility. The MALA will consume approximately 4.75 amps at +5 voltage, direct current (Vdc) and will require less than 1 amp of current at both +12 Vdc and -12 Vdc above the ARTS IIA system requirements.

33. INTERFACES.

a. General. At an ASR-9 and/or Mode S site, the interface to the radar is through the SCIP. At a Mode S only site, the interface to the beacon radar is through a set of synchronous modems. Figures 3-1 through 3-3 depict the major system interfaces. Implementation of the ASR-9 and Mode S radars is the responsibility of ANR-120 and ANR-130 respectively. Interface requirements are defined in the following Interface Control Documents (ICD): 1) Mode S to ASR-7/ARTS-IIA Terminal Sites (TM-PA-0018/0072/00-2), 2) Mode S to ASR-8/ARTS-IIA Terminal Sites (TM-PA-0018/0072/00-1), and 3) ASR-9 SCIP to Terminal Computer (Westinghouse Data Item SE007-4). The interface to each of the external systems is defined by physical, electrical, and link level interfaces. The physical interface between the ARTS IIA and the radar systems is the connector panel described in paragraph 31a. The link level (functional) interface is described in paragraph 30. The electrical interface is described in subparagraph b.

b. Electrical Interface. The MALA is designed to meet all requirements of Electronics Industry Association (EIA) RS-449 for a receive-only configuration for the ARTS IIA to SCIP interface. The interface to the Mode S satisfies all requirements of EIA-RS-530 for a receive-only configuration. At Mode S sites, the cable provided between the connector panel and the modems performs a translation from RS-449 to RS-530. The MALA may also be configured to interface to RS-232 modems should this become a future requirement. DIP switches on the MALA are used to configure for RS-232 operation. Figures 3-7 and 3-8 show the interchange circuits implemented for the RS-449 ARTS IIA to SCIP interface and the ARTS IIA to modem (EIA-RS-530 interface) respectively. Figure 3-9 shows the option select logic for the RS-232 interface.

34.-39. RESERVED.

FIGURE 3-7. SCIP TO ARTS IIA EIA-RS-449 INTERFACE

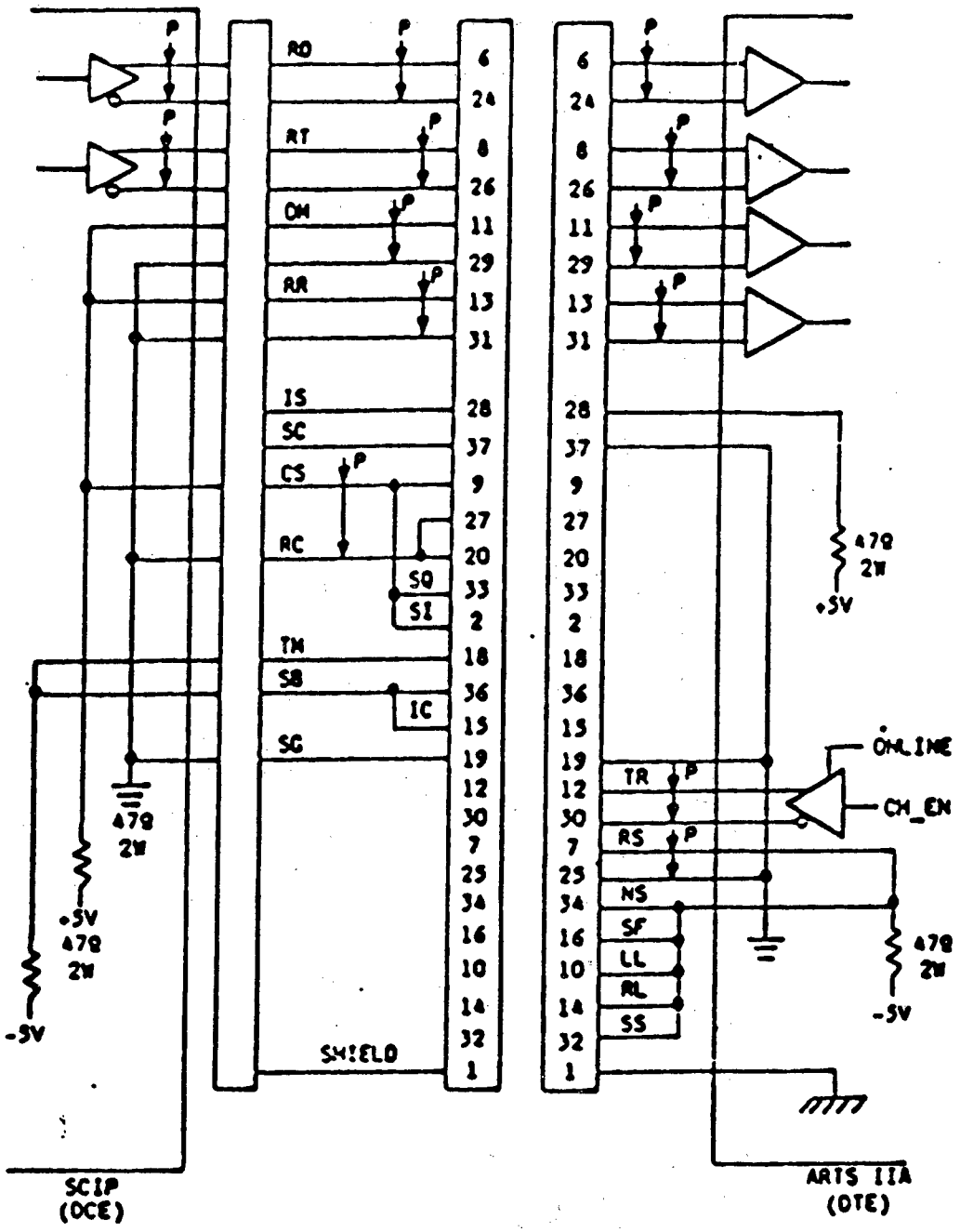

FIGURE 3-8. ARTS IIA TO MODEM EIA-RS-530 INTERFACE

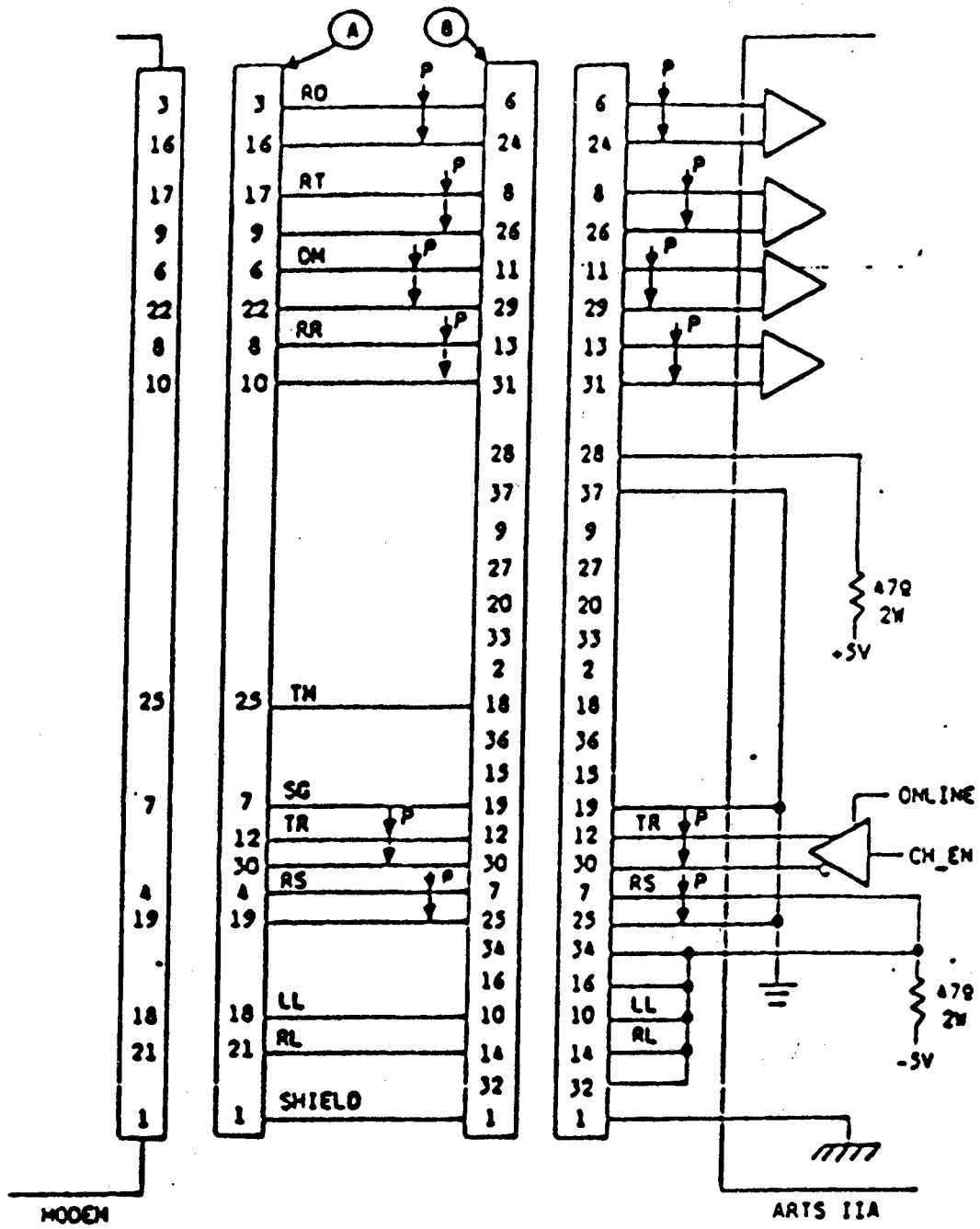

NOTES: P DENOTES TWISTED PAIR

A 25 PIN DTE CONNECTOR

B 37 PIN DCE CONNECTOR

FIGURE 3-9. RS-232 OPTION SELECT LOGIC

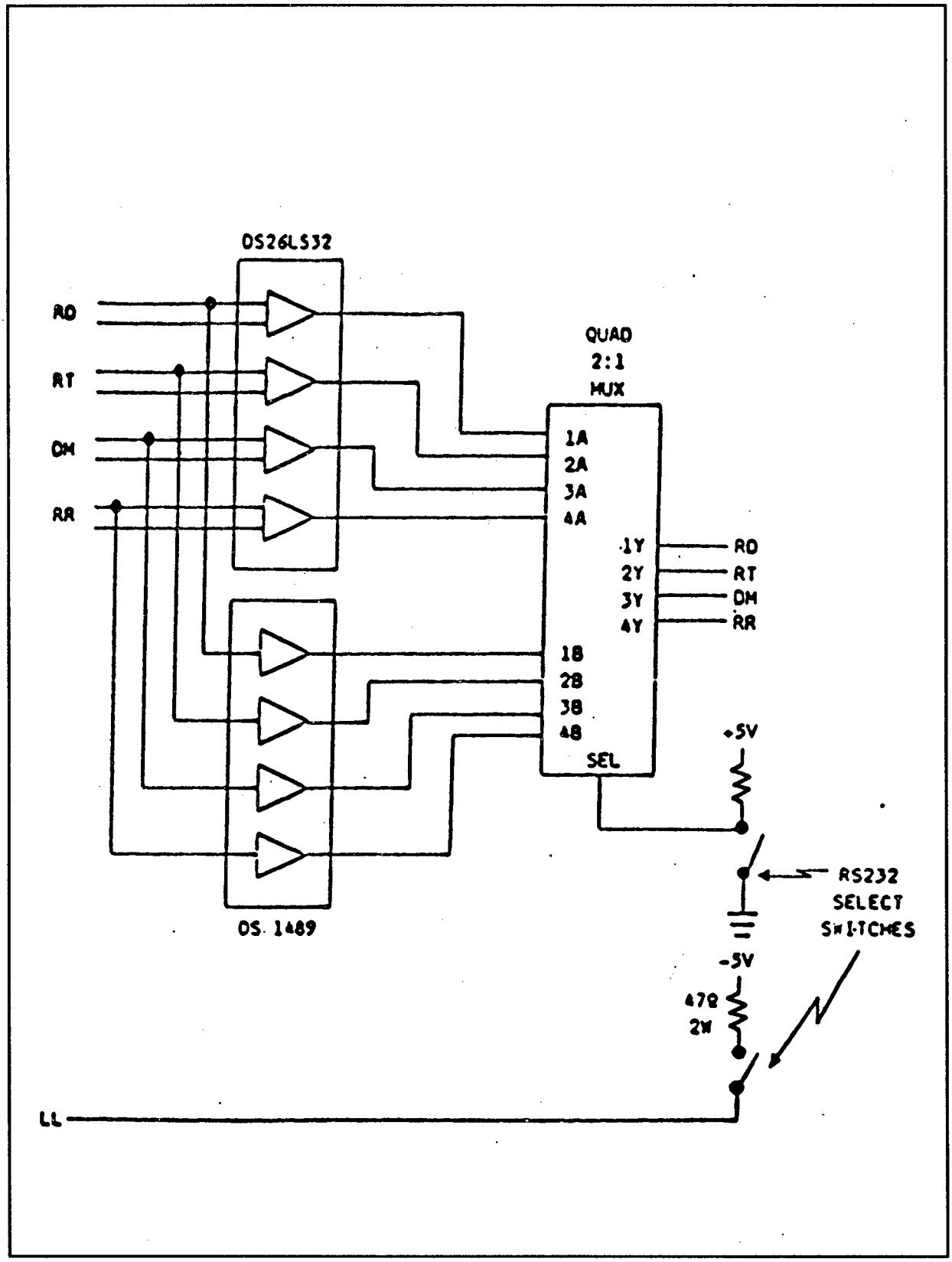

FIGURE 3-9 RS-232 OPTION SELECT LOGIC

CHAPTER 4. PROJECT SCHEDULE AND STATUS

40. PROJECT SCHEDULE AND STATUS. Two project activities schedules are provided. Appendix 1, table 1, depicts activities which have been completed on the project. Appendix 1, table 2, provides the major milestones remaining to complete the project and completion dates. The activities and dates depicted represent milestones projected by analysis and/or review of the contract requirements. It should be noted that activities in these tables are by no means an all inclusive list of those activities required for project completion. Many of the remaining activities are interrelated and are subject to change. Updates to these appendix will be provided periodically by the Manager, ARTS IIA Branch, ANA-140.

41. MILESTONE SCHEDULE SUMMARY. Current installation schedules for MALA kit and non-kit sites are available in the MDDF. The schedules are updated periodically by ANA-140 and are accessible to the site or region by contacting the NAS Plan Coordinator at each region. First kit installation will occur at the ACT in support of integration and shakedown testing. Concurrently, kits will be delivered to other non-operational sites for installation in ARTS IIA's to support training needs (FAA Academy) and FAA Logistics Center requirements (Depot "hot system"). At the completion of keysite testing, delivery to operational sites will begin.

42. INTERDEPENDENCY AND SEQUENCE. Those interdependencies critical to project completion are with the ASR-9 and Mode S projects. Appendix 1, table 3,lists in alphabetical order, sites to receive MALA kits and the interdependent radar or automation system.

a. ASR-9/Mode S Interdependency. Current schedules show MALA kit installations preceding a few of the remaining ASR-9 installations. At sites where the ASR-9 precedes the MALA, the ASR-9 project is commissioning the radar with the existing automation system (ARTS II or ARTS IIA) using the reconstituted beacon video interface. When the ARTS IIA and/or MALA kit become available, additional ASR-9 to ARTS IIA testing will occur. At the remainder of the sites, the ARTS IIA (with MALA) will have been commissioned to operate with the existing radars prior to arrival of the new radars. As the new radars become available, the ARTS IIA will be commissioned to operate with these radars.

b. Mode S Interdependency. Current schedules show MALA kit installation preceding all Mode S installations. At all of those ASR-9 sites scheduled to receive Mode S radar, the ARTS IIA will be upgraded with the MALA kit and A2.07 level software prior to the availability of the Mode S.

43.-49. RESERVED.

CHAPTER 5. PROJECT MANAGEMENT

50. PROJECT MANAGEMENT, GENERAL. Project management of the ARTS IIA interface with Mode S/ASR-9 project is the responsibility of the ARTS IIA Branch, ANA-140. The branch manager of ANA-140 is the program manager (PM) and the single focal point for all program management activities. The PM will ensure that the contractor has access to technical documentation, appropriate data bases, and sources of information relative to Government furnished equipment (GFE). The PM designated a technical officer (TO) within ANA-140 to provide technical guidance and direction to the contractor within the scope of the contract. In support of the projects, a contracting officer (CO) is designated by ALG-310 to perform the general contract management activities to ensure that the terms of performance under the contract are met. The CO is the only person authorized to make changes affecting prices, deliverables, or schedules. Management and technical support to the PM and TO is provided by the System Engineering and Integration (SEI) contractor.

51. PROJECT CONTACTS. Appendix 2 provides a listing of project management personnel designated as contacts for their respective organizations.

52. PROJECT COORDINATION. Coordination between FAA organizational elements is required to fulfill assigned responsibilities. The following paragraphs list the organizational elements requiring coordination and their respective responsibilities in support of the projects.

a. FAA Headquarters. The following organizations within FAA headquarters shall fulfill the indicated project responsibilities:

(1) Automation Engineering Division (ANA-100).

(a) Provide technical guidance and direction to the contractor in the design, development, testing, installation, integration, and production of the hardware and software and ensure all technical contract requirements are met.

(b) Provide guidance to all offices, services, centers, and regions on project implementation. This includes, but is not limited to:

1 Site installation.

2 Disposition of excess equipment.

3 Provisioning.

4 Updates to maintenance concept.

5 Training.

6 Configuration management (CM).

7 Documentation deliverables.

8 All test phases.

9 Joint Acceptance and Inspection (JAI), Operational Readiness Demonstration (ORD), Operations Changeover.

(c) Establish and chair project working groups as required.

(d) Manage project interdependency with interfacing projects.

(e) Serve as a member of the ANA-100 Configuration Control Board (CCB).

(f) Develop the Deployment Readiness Review (DRR) Report and provide a briefing to the Executive Committee (EXCOM) assessing deployment readiness.

(g) Ensure the availability of funds and keep the contract within budget limitations.

(h) Prepare the Master Test Plan (MTP) jointly with the Engineering, Test, and Evaluation Service (ACN).

(i) Chair the NAS Integrated Logistics Support (NAILS) Management Team (NAILSMT).

(j) Serve as a member of the Test Policy and Planning Review Board (TPRB).

(k) Conduct the Functional Configuration Audit (FCA) and Physical Configuration Audit (PCA).

(2) National Automation Engineering Field Support Division (ASM-400).

(a) Provide input to Operational Test and Evaluation (OT&E) requirements.

(b) Support the DRR process.

(c) Serve as a member of the TPRB.

(d) Develop system shakedown requirements.

(e) Develop shakedown test plan and procedures in accordance with FAA-STD-024A, Preparation of Test and Evaluation Plans and Test Procedures.

(f) Conduct shakedown testing, perform data analysis and prepare reports.

(g) Support shakedown testing at the first field site in accordance with the program manager program directive.

(h) Serve as a member of the ANA-100 CCB.

(i) Review, approve, and distribute maintenance/diagnostic contract deliverables for field use.

(j) Provide maintenance support for hardware, firmware, and diagnostic software.

(k) Coordinate transition and system certification at the sites.

(l) Serve as a member of project working groups established by ANA-100.

(m) Ensure execution of an effective provisioning program in conjunction with the Logistics Service (ALG) and Mike Monroney Aeronautical Center (AAC).

1 Co-chair NAILSMT.

2 Verify Integrated Logistics Support (ILS) support activities conform to the contract requirements.

3 Review development of support data.

(n) Provide configuration management of hardware/firmware and diagnostic software.

(o) Support the FCA and PCA.

(3) Office of Air Traffic Systems Management, Civil Operations Program, (ATM-100)/Air Traffic Procedures Division, (ATP-100).

(a) Assist in the development of shakedown and operations changeover plans with ANA, regions, and the ACT.

(b) Ensure that all operational aspects of system implementation are satisfactorily dealt with by the regions prior to operation changeover.

(c) Provide technical coordination and support to ANA-100 on ATC functions, hardware configuration, and operational requirements which interface with associated terminal and/or en route automated systems.

(d) Update the operations and procedures handbooks as may be necessary.

(e) Provide AT Requirements and Certification, ATZ-100 with any special training requirements.

(f) Serve as a member of the ANA-100 CCB.

(g) Serve as a member of project working groups established by ANA.

(h) Support the DRR process.

(4) Air Traffic Plans and Requirements Service (ATR-1).

(a) Provide input to OT&E requirements.

(b) Serve as a member of the TPRB.

(c) Develop system shakedown test requirements.

(d) Develop shakedown test plans and procedures in accordance with FAA-STD-024A.

(e) Prepare training proposals, review and approve all associated training schedules, assignments, programs, and training plans from a technical and operational standpoint.

(f) Instruct and advise regions on training programs, schedules, and assignments.

(g) Provide configuration management of ARTS IIA operational software and off-line software i.e., Data Reduction and Analyses (DR&A) and Training Scenario Generator (TSG).

(h) Provide coordinated transition to operational control.

(i) Maintain operational and off-line software programs once development is complete.

(j) Review, approve, and distribute for field use, contract deliverables.

(k) Serve as a member of the ANA-100 CCB.

(l) Conduct shakedown testing, perform data analysis, and prepare reports.

(m) Support shakedown testing at first field site in accordance with program manager program directive.

(n) Support the DRR process.

(o) Support the FCA and PCA.

(5) System Engineering and Integration (SEI) Contractor. The SEI contractor is responsible for providing technical and project management support to the PM in the following areas:

(a) Assist in the preparation of procurement packages for the systems and subsystems.

(b) Assist in reviewing contractor technical proposals for the systems and subsystems.

(c) Review and evaluate the system and subsystem design and the status of system and subsystem technical activities.

(d) Perform analyses of technical problems as desired.

(e) Plan, schedule, and monitor activities associated with field installation of systems and subsystems.

(f) Support the CM process.

(g) Provide technical assistance in the review and development of training policies, programs, standards, systems, and procedures.

(h) Provide technical support in the execution of an effective provisioning program.

(6) Logistics Service, Materiel Management Division, (ALG-200).

(a) Provide test support to ANA-140 during the conduct of factory acceptance tests.

(b) Provide quality assurance support for Production Acceptance Test and Evaluation (PAT&E).

(c) Integrate ARTS IIA logistics efforts with the NAS program.

(d) Initiate and maintain effective supply support procedures.

(e) Initiate and execute an effective provisioning program.

(f) Ensure an effective training program is employed.

(g) Provide policy and procedural guidance to regional AF divisions and AAC for appropriate property controls prior to certification.

(h) Assist ANA in providing procedures for the disposal or utilization of surplus materiel.

(i) Serve as a member of project working groups established by ANA-100.

(j) Serve as a member of the ANA-100 CCB.

(k) Support the DRR process.

(l) Provide supportability test and evaluation (T&E) parameters for incorporation in shakedown testing.

(m) Review pertinent procurement and technical documentation, and contractual deliverables.

(n) Serve as a member of the TPRB.

(7) NAS System Engineering Service (ASE)/Automation Division (ASE-100).

(a) Provide NAS system level requirements for T&E.

(b) Verify compliance with NAS system level and OT&E requirements.

(c) Serve as a member of the ANA-100 CCB.

(d) Coordinate test policy waivers.

(e) Verify compliance with Order 1810.4A, FAA NAS Test and Evaluation Program.

(f) Provide guidance and direction on the conduct of the FCA and PCA.

(8) Airway Facilities Training Program Division (AHT-300).

(a) Develop and recommend technical training policies, programs, standards, systems and procedures to meet FAA program requirements, applicable Federal laws, and Office of Personnel Management and Department of Transportation regulations.

(b) Administer technical training programs and policies.

(c) Evaluate the technical training programs and ensure that measures are taken to correct deficiencies.

(d) Provide training programs.

(e) Develop, operate, and maintains a management information system.

(f) Support the DRR process.

(9) NAS Transition and Implementation Service, NAILS Program Division (ANS-400).

(a) Assign an Associate Program Manager for Logistics (APML) to support the PM in managing the total NAILS effort.

(b) Plan and coordinate the development of NAILS requirements.

(c) Coordinate the development and update of the Integrated Logistics Support Plan (ILSP).

(d) Evaluate and integrate NAILS requirements in the planning and procurement process.

(e) Monitor and track all NAILS functions.

(f) Review contractor NAILS data deliverables.

(g) Review all procurement documents for inclusion of NAILS requirements.

b. Field Organizations. The responsibilities of the ACT, regions, and other field organizations follow:

(1) FAA Technical Center shall provide the support necessary to test and evaluate the project for functional and operational performance and for compliance with the contract requirements. The ACT shall perform these duties in accordance Order 1810.4A, which designates ACN as the Test Director. Accordingly, ACN shall designate a test director for the projects. ACN will also:

(a) Develop OT&E and NAS integration requirements for each subsystem (project) in coordination with AT, AF, other user organizations, and acquisition program managers.

(b) Prepare testing program directives and coordinate agreements with ATR/AND/AAF/ALG.

(c) Prepare test monitor guidelines; test plans and test procedures for OT&E in accordance with FAA-STD-024A, NAS integration test plans and procedures in accordance with FAA-STD-024A; and prepare/concur on Development Test and Evaluation (DT&E) test plans and procedures.

(d) Direct the conduct of DT&E, NAS integration, PAT&E, and OT&E; conduct DT&E, NAS integration and OT&E data analysis, and prepare reports.

(e) Support ASE-100 in development of NAS system-level requirements for T&E.

(f) Support acceptance testing at the first field site in accordance with program manager program directive.

(g) Maintain the status of test progress and test problems.

(h) Present reviews to the PM or TO, as required.

(i) Serve as a member of the ANA-100 CCB, as required.

(j) Operate and maintain NAS subsystems delivered to the ACT after FAA acceptance of the equipment.

(k) Provide for facility readiness.

(l) Maintain project documentation in accordance with Order 1750.6, NAS Documentation Facility.

(m) Establish initial training requirements for the ACT personnel and coordinate with ATZ-100 and ASM-210.

(n) Establish financial and item management control and accountability for all agency property received at the ACT.

(o) Support the DRR process.

(2) Mike Monroney Aeronautical Center, FAA Logistics Center (AAC-400).

(a) Accomplish cataloging and provisioning for equipment.

(b) Provide supplies and working equipment for each facility receiving equipment.

(c) Provide national project materiel which is not procured by ALG.

(d) Adapt national engineering specifications to local conditions and perform engineering services within nationally provided guidelines for the installation, inspection and acceptance of the system, including subsystem components, at the FAA Academy.

(e) Provide engineering feedback to ANA-140 for correction of system or equipment deficiencies for the installed systems.

(f) Provide for technical supervision of onsite activities performed under the contract at the AAC.

(g) Preliminarily accept items delivered to the FAA Academy under the contract.

(h) Develop, in conjunction with ALG and ANA-140, logistics policies and plans for support of a system.

(i) Participate in planning activities for the transition of system equipment into the logistics inventory.

(j) Assure timely selection of necessary maintenance personnel to meet FAA Logistics Center repair requirements.

(k) Review and evaluate all FAA Logistics Center component-level training classes provided by the contractor.

(3) Mike Monroney Aeronautical Center, FAA Academy (AAC-900).

(a) Develop, monitor, and conduct training programs as directed by AHT-1.

(b) Participate, as requested by AHT-1, in the review of instruction books.

(c) Assure timely selection of necessary instructors and maintenance personnel to meet AAC training and staffing requirements.

(4) Regions. Each region shall appoint a regional PM (see paragraph 51). The regional PM will ensure that facilities and engineering work, if required, is completed prior to the delivery of hardware and software. The PM will monitor installation and coordinate requests for contractual or technical support with ANA-140 and the National Automation Engineering Field Support Division, ASM-400. The regional PM shall arrange for the appointment of a technical onsite representative (TOR) at each facility. The regions shall fulfill the following responsibilities:

(a) Prepare for and monitor site installation. Coordinate with ANA and AAT on any changes.

(b) Assign a Regional Integration Group (RIG) to provide for coordination, direction, and guidance necessary for effective and timely implementation of the project. The RIG shall be chaired by the regional PM and will be comprised of regionally selected AT and AF personnel knowledgeable in implementation of automation programs. The RIG shall be responsive to the guidance and direction of the region for monitoring the efforts at each site within the region. The RIG is to monitor and provide assistance and guidance in all phases of the terminal automation implementation for all regional sites.

(c) Designate a TOR to serve at each terminal facility. The TOR provides the regional coordination, direction, and guidance necessary for effective and timely accomplishment of site preparation functions during the terminal automation implementation at the site to which he/she is assigned. This includes on site decisionmaking and day-to-day problemsolving. The TOR is to be the principal on site regional representative who reports problems, progress, and other matters to ANA-140 through appropriate regional representatives. The TOR is to be guided by approved test documentation and the PIP. Established channels of communications between regions and ANA-140 are to be used in carrying out the terminal automation program. The TOR is also to serve as a member of the RIG and Terminal Integration Group (TIG).

(d) Serve as a member of the TIG at each site. The TIG is to be comprised of designated onsite regional AT and AF personnel experienced in the implementation of electronic and/or automation systems. The TIG shall be designated no later than 90 days prior to shipment to the respective site. The TIG shall be responsive to the guidance and direction of the TOR. Personnel assigned to the TIG are to be engaged in test activities subsequent to Initial Operational Capability (IOC).

(e) Provide regional logistics requirements to AAC and ANA-140.

(f) Support the development of test plans and procedures for integration and shakedown testing.

(g) Conduct software integration and shakedown testing.

(h) Conduct and/or monitor site acceptance and field shakedown testing.

(i) Conduct the JAI.

(j) Conduct the ORD and commissioning.

(k) Support ACN during OT&E testing.

(l) Conduct site shakedown and operations changeover testing in accordance with the requirements of the test plans for these functions.

(m) Develop the required environmental and "as built" records.

(n) Obtain through the Telecommunications Management and Operations Division, ASM-300, as appropriate, all Telephone Company (TELCO) communication link services required for the timely acquisition of communications required for ARTS IIA.

(o) Assure that appropriate FAA/military local onsite agreements are reached.

(p) Prepare the Operations Changeover Plan.

(q) Conduct the final JAI and the formal certification exercise (commissioning) for designated terminal facilities.

(r) Generate site-specific adaptation data for the creation of system load tapes.

(s) Establish financial and item management control, and accountability for all agency property received in the region.

c. Project Support Organizations.

(1) ARTS IIA Software Integration Team is an inter-branch/section software coordination group established to define and manage the interface software activities associated with the integration of project software and for obtaining commitments from organizations. The team is the focal point for resolving inter-branch/section technical and management issues associated with software integration

(a) Membership. The software integration team is comprised of representatives from the following organizations:

1 Program Director for Automation (ANA); Chairman.

2 Air Traffic Plans and Requirements Service (ATR).

3 Office of Air Traffic Systems Management, Civil Operations Program, ATM-100/Air Traffic Procedures Division, ATP-100.

4 Engineering, Test, and Evaluation Service (ACN).

5 System Maintenance Service (ASM)

6 SEI Contractor.

(b) Duties of Members. Responsibilities of designated members are as follows:

1 Act as the focal point of their respective organizations for software integration issues.

2 Provide liaison between the software integration team and their respective organizations.

3 Take necessary action within their respective organizations for software integration issues.

4 Keep their respective organizations informed of software integration issues/activities.

(2) Configuration Control Board. In accordance with Order 1800.8E, NAS Configuration Management, dated July 11, 1985, the CCB is the official agency authorized to approve or disapprove baselines and changes to the baselines. There is a central NAS CCB to establish and control baselines and to administer configuration control. From this CCB, authority is delegated to lower-level CCB's to effectively administer proposed changes at the most appropriate level. All lower-level CCB's, which include the ANA-100 cluster CCB, will be accountable to the NAS CCB. The NAS CCB and lower level CCB's have been established through a charter

defining authority, responsibilities (including the specific documents over which the CCB has control), and membership. Decisions and directives are documented in Configuration Control Decisions (CCD), which either approves, disapproves, defers, or refers the change request to another CCB. When contractual action is required, the CCD serves as a basis for preparation of a procurement request which is submitted to the CO. The CCD may also be distributed to other Government agencies and serves as an official notification of CCB action. Representation on the NAS CCB or lower level CCB(s) include the various agency services/offices that have responsibilities to acquire, support, and operate the system. Representatives of other organizations may be invited to attend as required.

(a) Membership. The ANA-100 cluster CCB is comprised of representatives from the following organizations:

1 Program Director for Automation (ANA); Chairman.

2 Air Traffic Plans and Requirements Service (ATR).

3 Office of Air Traffic Systems Management, Civil Operations Program, ATM-100/Air Traffic Procedures Division, ATP-100.

4 System Maintenance Service (ASM).

5 NAS Systems Engineering Service (ASE).

6 SEI Contractor.

7 Logistics Service (ALG).

(3) Deployment Readiness Review EXCOM Board. In accordance with Order 1810.4A, the PM submits a DRR Report to the EXCOM DRR Board. This report contains any operational and contractual requirements that have not been met. The EXCOM DRR Board is the official agency authorized to approve or disapprove implementation of the subsystem/system into the NAS. The EXCOM DRR Board is co-chaired by AND-1 and AAF-1 and includes representatives from agency services/offices that are responsible for acquisition, support, and operation of the system. Other representatives may be invited to attend as required.

(a) Membership

1 Associate Administrator for Airway Facilities (AAF-1).

2 Associate Administrator for NAS Development (AND-1.

3 Associate Administrator for Human Resource Management (AHR-1).

4 Director, NAS Transition and Implementation Service (ANS-1).

5 Director, Office of Air Traffic Systems Management (ATM-1).

6 Director, Air Traffic Plans and Requirements Service (ATR-1).

7 Director, Aeronautical Center (AAL-1).

8 One Manager, Airway Facilities Division.

9 One Manager, Sector Field Office.

10 NAS Implementation Director, SEI Contractor.

53. PROJECT RESPONSIBILITY MATRIX The following table identifies activities and associated responsible personnel:

TABLE 5-1. PROJECT RESPONSIBILITY MATRIX

TASK/PLAN/ACTIVITY	PRIMARY OFFICE	SUPPORTING OFFICES
Implementation Schedule	ANA-140	Regions
Training Programs Schedules and Assignments	ATZ-100 ASM-210, AHT-400/500	ATR, ANA-140, ATM/ATP AAT, Regions, AAC, ASM-400
Configuration Management (H/W, S/W and F/W)	ASE ASM	ASM-400, ATR, ATM/ATP Regions, ANA-100
Software Maintenance (Operational)	ANA-140 ATR-410	Regions, ATR-230
Software Maintenance (Diagnostic)	ANA-140 ASM-400	Regions
NAS Integration Test Plan and Procedures	ACN-110	ANA-140 ASM-400
Shakedown Test Plan	ASM-400	ANA-140, ATM/ATP, ATR-560 Regions, ACN
Shakedown Test Procedures	ASM-400	ANA-140, ATM/ATP, ATR ACT
Joint Acceptance and Inspection	Regions	ANA-140, ASM-400 ATR, ATM/ATP
Operations Changeover Plan	Regions	ASM-400, ATR, ATM/ATP
Disposition of Excess Equipment Plan	ANA-140	AAC, Regions, AAF
Logistic Support Planning	AAC	ANA-140, Regions
Operational Readiness Demonstration Test Plan/ Procedures	Regions	ATR, ATM/ATP, ASM-400

54. PROJECT MANAGERIAL COMMUNICATIONS. Project managerial communication is provided monthly to ANA-1 and AND-1 through a monthly Program Director Status Review (PDSR). This PDSR provides insight into cost, schedule, technical, and logistics issues that may exist. Communication to the various branches of ATR, ATM-100/ATP-100, AAC, the ACT, the regions and other ANA organizations occurs formally through Technical Interchange Meetings (TIM) that are initiated during all stages of the program.

55. IMPLEMENTATION STAFFING. Staffing peculiar to implementation of the project include assignment of regional PM's, RIG's, TOR's, and TIG's. Responsibilities for these persons and groups are defined in paragraph 52b.

56. PLANNING AND REPORTS.

a. Reports.

(1) The Automated Radar Terminal System IIA Baseline Test Report documents hardware and software performance in an operational environment.

(2) The Project Progress Report provides the TO, a monthly assessment of contractual effort as of the date of the report, work scheduled for the next period, and special problem areas including proposed solutions.

(3) The Program Status Review Board provides monthly information to FAA upper management on cost, schedule, and the technical status of the projects.

(4) The PAT&E Test Report documents the results of PAT&E and is the responsibility of the ACT test director.

(5) The Hardware Discrepancy Report (HDR) documents hardware discrepancies.

(6) The Operational Changeover Report documents the changeover activities to bring a site into the NAS.

(7) The Program Technical Report (PTR) documents software discrepancies.

(8) The DRR Report documents the results of the deployment readiness process and provides recommendations to the EXCOM DRR.

(9) The Shakedown Test Report documents the results of the ACT shakedown testing.

(10) The NAS Integration Report documents the results of NAS integration testing and is the responsibility of the ACT test director.

(11) The OT&E Test Report documents the results of OT&E and is the responsibility of the ACT test director.

b. Plans.

(1) The Shakedown Test Plan defines tests of the system in an operational environment to assess the readiness of people, procedures, and the system to assume field operational status.

(2) The Operations Changeover Plan defines the procedures, schedules and techniques, coordination, and training required to transition a facility to a new system/subsystem without degrading NAS operations.

(3) The OT&E Test Plan defines testing to be accomplished for assessing the operational suitability and operational effectiveness of the system.

(4) The Training Plan defines those training activities to be accomplished to ensure personnel are qualified before participation in site or system certification.

(5) The NAS Integration Test Plan defines testing to be accomplished for verifying compliance with NAS integration requirements. Integration requirements assess the operation of multiple interfaces and integration with other systems in as realistic an operational environment as possible.

(6) The DT&E Plan defines testing to be performed for design assistance, technical risk assessment, and specification performance verification. DT&E plans are developed by the contractor in accordance with the contract.

(7) The Site Shakedown Test Plans define the tests required to confirm the integrated readiness of people, procedures, and the system to assume field operational status.

(8) The Operational Readiness Demonstration Test Plan defines the tests to be accomplished in support of the JAI to determine whether the system satisfies FAA JAI construction, installation, performance, operation, and maintenance criteria.

(9) The Automated Radar Terminal System IIA Baseline Test Plan defines the test to assess hardware and software performance in an operational environment.

(10) The Integrated Logistics Support Plan (ILSP) defines the elements of the NAILS Program applicable to the projects. The ILSP also describes the maintenance concept to be applied.

(11) The Master Test Plan defines the T&E program for the project and provides a framework for the systematic test and evaluation of the system to ensure that all functional and performance requirements are satisfied.

(12) The NAS Plan provides a comprehensive plan for modernizing and improving ATC and AF through the year 2000.

57. APPLICABLE DOCUMENTS. See Appendix 3, List of Documents.

58.-59 RESERVED.

CHAPTER 6. PROJECT FUNDING

60. PROJECT FUNDING STATUS, GENERAL. Two contracts have been utilized in the development and production of the ARTS IIA Interface with Mode S/ASR-9 project. The contracts, "ARTS II Enhancement" (DTFA01-82-C-10008) and "ARTS IIA Upgrade"contract (DTFA01-85-C-00040) are fully funded. The first contract was modified (modification #13) and additional funds allocated in September 1985 to develop prototype hardware and software to interface the ARTS IIA system to the new ASR-9 radar. The prototype hardware and software were used to support the ASR-9 test program. The second contract was subsequently modified (modifications 5, 9, 11, and 13) and funded to modify the prototype hardware and software to interface to the Mode S radar and provide production quantities of the prototype hardware and software for installation at 67 operational ARTS IIA sites and 8 non-operational sites. No funding problems are expected to be encountered during the execution of this contract.

61.-69. RESERVED.

CHAPTER 7. DEPLOYMENT

70. GENERAL DEPLOYMENT ASPECTS. Site deployment planning is a site-specific task due to the unique requirements of each site (e.g., system configuration, whether installed by the FAA or contractor, etc.). Each site shall prepare site-specific implementation schedules consistent with the MDDF and table 7-1. In accordance with Order 1810.4A a prerequisite to deployment is the EXCOM DRR. The activities leading up to and the scheduled date of the DRR EXCOM are listed in appendix 1, table 2. Responsibility for installation of MALA kits and operational software is split between the contractor and the FAA. The contractor is tasked with MALA kit and A2.07 operational software installation at the ACT, first operational site (keysite), and the first installation in each region. Each region shall specify which site in the region is to be installed by the contractor. The purpose for contractor installation at theses sites is to provide a forum for training AF and AT personnel in MALA kit and A2.07 software installation procedures and familiarize AT with software operation. This section describes tasks to be performed by the FAA and UNISYS personnel during deployment of the MALA kits and A2.07 level software to each of the designated ARTS IIA sites. At FAA installed sites, FAA responsibilities and activities parallel those of contractor installed sites.

TABLE 7-1. IMPLEMENTATION ACTIVITIES (PRE-SHIPMENT)

ACTIVITY	SCHEDULE	RESPONSIBILITY	SITE
(1) Submit Changes to Site Adaptation Kit	Ongoing	Sites	MALA kit
(2) Front End Plots & Site Adaptation Data Bases to Sites	60 days prior to S/W delivery	Contractor	MALA kit
(3) Site Adaptation Data Bases Frozen	30 days prior S/W delivery	Contractor	MALA kit
(4) EEM Issued	30 days prior to S/W delivery	ASM-160	ALL
(5) SPB-4 Issued (Documentation)	Upon delivery to Keysite	ATR-242	ALL
(6) SPB-5 Issued (Software)	Reference MDDF	ATR-242	ALL

71. SITE PREPARATION. Government site preparation activities are required at sites scheduled for MALA kit installation. Non-kit sites do not require site preparation. The installation of ASR-9 and/or Mode-S radar will induce a change in radar coordinates at some sites which will require changes to the site adaptation parameters contained within the operational software. Where a sites digital terrain map (DTM) is affected, ANA-140 will coordinate with the National Oceanographic and Atmospheric Administration (NOAA) to obtain revised DTM's. Revised DTM's will be

provided to the contractor as GFE, for use in building a site-specific operational tape. A site affected by a change shall review the A2.06 operational software operational software site adaptation parameters and submit corrections in the form of change request forms (CRF). The CRF's shall be submitted to ATR-412 at the ACT for forwarding to the contractor. CRF's shall be received by the contractor and reviewed for completeness and accuracy. Discrepancies found will be made known to ATR-412 for resolution through contact with the affected site. To allow time for the contractor to build site-specific operational tapes the sites data bases will be "frozen" 30 days prior to software delivery to each site and no further site adaptation changes will be accepted. After the "freeze" date, any site adaptation changes to the operational software will be made either by ATR-412 or the individual site. Once "frozen," the data bases shall be used by the contractor to generate site adapted operational tapes at the rate of eight per month. The contractor will forward the site adapted operational tapes to the ACT for verification by ATR-412. Tape validation will consist of executing a set of test procedures against the software to ensure the correct implementation of site adaptation parameters. The contractor shall install and further test the verified tapes at the ACT, keysite and first site in each region. The remaining verified tapes will be shipped to individual sites for installation and testing by AT site personnel.

72. DELIVERY.

a. MALA kits destined for operational sites will be delivered by the contractor to the FAA Logistics Center. MALA kits designated for non-operational sites will be delivered directly by the contractor. Appendix 1, table 3 lists operational and non-operational sites which will receive MALA kits. Delivery schedules are available in the MDDF. The contractor is fully responsible for shipment (shipping arrangements and full-value liability) of all kits without damage or loss, from the contractor's site to the FAA Logistics Center and nonoperational sites. Damaged equipment shall be repaired or replaced, depending upon its condition, by the contractor. AAC-400 is responsible for shipment of kits without damage or loss from the FAA Logistics Center to the operational site. Other than the ACT, inspection of the items shipped to operational and non-operational sites shall be accomplished by FAA field site personnel. In the case of the ACT, inspection of the items shipped will be accomplished by the contractor.

b. A2.07 operational software shall be delivered by the contractor to ATR-410 at the ACT for verification. Verified software shall be packaged and shipped by ATR-412 to their respective site in accordance with established schedules.

c. System diagnostics software shall be delivered by the contractor to ASM-400 for subsequent delivery to sites in accordance with established schedules.

73. INSTALLATION PLAN. The site planning function is the responsibility of the contractor, ANA-140, the regions and AF and AT personnel at the sites. Guidance and direction for installation planning will be provided by the RIG using information provided in this and other guidance documentation. The TOR at each site is responsible for ensuring that the installation activities following shipment are completed (typical activities are presented in table 7-2). Whether performed by the contractor or the FAA, site installation will be accomplished in response to an electronic equipment modification (EEM) and a site program bulletin (SPB). The EEM is prepared and issued by ASM-400 and authorizes equipment modifications. Installation of equipment at the first site within each region will be in response

to an EEM specifying a facilities and engineering (F&E) modification. All subsequent installations will be in response to an EEM specifying an operational modification. Installation of the EEM will involve installing two jumpers on the LSI 2/40 motherboard, installing two MALA PC boards in existing slots in the chassis of the LSI 2-40 computer, installing the connector panel, connecting cables from the connector panel to each MALA, and connecting cables from the connector panel to the a signal distribution panel. The EEM will include modified system diagnostics to be used for diagnosing problems. Installation of the EEM is expected to take approximately 5 hours. The SPB is prepared and issued by ATR-412 and authorizes software changes. Airway facilities personnel shall request shipment of the MALA hardware from the FAA Logistics Center with sufficient lead time to allow for arrival of the MALA hardware at the site prior to arrival of the A2.07 operational software from the ACT. The complete installation and testing of the MALA kit and A2.07 level operational software should take approximately 30 days. MALA kit installation will consist of hardware installation and checkout and upgrade to the A2.07 level operational software. The regions/sites are responsible for preparing their own site installation plan using the information contained in this document and other guidance documents. Installation responsibilities whether installed by the contractor or the FAA include, but are not limited to the following:

a. Equipment Installation. All mechanical/physical installation aspects for the kit, including installation of the connector panel, internal cables, and MALA circuit cards.

b. System Cabling. Installing necessary cables from the GFE modems (Mode S) or SCIP (ASR-9) to the connector panel. At Mode S sites, required cables shall be provided as part of the MALA kit. At ASR-9 sites, cables are to be provided by the ASR-9 project.

74. FIRST SITE VERSUS FOLLOW-ON SITE REQUIREMENTS.

a. Keysite. The first operational ARTS IIA site to receive a MALA kit and A2.07 operational software is designated as keysite. The purpose of the keysite is to validate plans and procedures prior to their use by subsequent sites. To ensure thorough validation, additional personnel are provided to the keysite during implementation. The additional support required will be provided jointly by the ASM-400, ATM-100/ATP-100, ATR-410, ANA-140, SEI Contractor, and the contractor. Discrepancies noted during execution of plans and procedures will be corrected and follow-on sites will be promptly notified of the corrective actions to be taken. The purpose of keysite testing is to validate the following prior to their use at subsequent sites:

(1) System operation at an operational field site.

(2) Contractor onsite system test plan and procedures.

(3) System shakedown test plan and procedures.

(4) Operational readiness test plan and procedures.

(5) Operations changeover plan and procedures.

(6) Contractor installation procedures.

(7) EEM and SPB.

TABLE 7-2. IMPLEMENTATION ACTIVITIES (FOLLOWING SHIPMENT)

ACTIVITY	SCHEDULE	RESPONSIBILITY
(1) Run A2.06 System Diagnostics	Prior to Kit Installation	AF
(2) Install MALA kit & MALA diagnostics	Upon delivery to Site	AF
(3) Conduct 72 hour Confidence/Stability Test	Upon completion of Checkout	AF
(4) Run System Diagnostics (Certify System)	Day 1	AF
(5) Install/Test Software (A2.07)	Day 1 through 30	AT
(6) ORD	Within 30 days of delivery	AT

NOTE: (1) Installation and testing of the MALA kit and the A2.07 software will be conducted on a not-to-interfere basis with operations.
(2) Activities 4 through 5 are applicable to non-kit sites.

b. Follow- On Sites. FAA headquarters (i.e., ASM, ATR, ATM/ATP and ANA) and SEI contractor will assist the follow-on sites in the following activities:

(1) Verification of the site parameter data required by the contractor to develop the site-adapted operational tape.

(2) Resolution of technical problems encountered during installation.

(3) Developing initial standards and tolerances through the recording and analysis of data obtained during operation.

75.-79. RESERVED

CHAPTER 8. VERIFICATION

80. FACTORY VERIFICATION.

a. The T&E process by which the functional and operational performance of a system/subsystem is tested and evaluated in a systematic manner begins with factory verification testing. The T&E process verifies technical contract requirements, operational effectiveness, and operational suitability. This is accomplished through a series of T&E activities, formal and informal, at the contractor's development/production sites, the ACT, and at operational sites. Verification of contract technical requirements is based upon and in compliance with Order 1810.4A. Site verification is based upon and in compliance with Order 6030.45, Facility Reference Data File. Factory testing, the first test in the process, consists of formal and informal tests conducted at the contractor facility. Successful completion of the design qualification demonstration of factory testing will constitute formal acceptance by ANA-140 of the MALA hardware/firmware and software interface design. Following formal acceptance of the MALA hardware/firmware, the contractor shall manufacture, test, and ship MALA kits destined for operational sites to the FAA Logistics Center. MALA kits designated for non-operational sites will be delivered to the site by the contractor. Factory testing of the A2.07 level operational software consists of a system qualification test conducted at the ACT, to verify compliance with technical requirements specified in the ARTS IIA functional specification. Successful completion of the system qualification test will constitute the formal acceptance by ANA-140 of the A2.07 level operational software. ANA-140 will then make a MALA kit and A2.07 level operational software available to ACN, for FAA integration, and to ATR and ASM for shakedown testing. The ACN, ATR, and ASM tests will be conducted at the ACT. When this testing verifies that the system functions properly, meets AT operational requirements, and is maintainable, ANA-140 will present a report to the EXCOM DRR Board, recommending deployment of the MALA kit and A2.07 level operational software. Following a decision to deploy, MALA kit and site adapted A2.07 level operational software will be delivered to the first operational site (keysite) for site shakedown. Upon successful completion of keysite testing, the contractor shall begin delivery of site adapted operational tapes to the ACT for AT validation. Validated tapes will be delivered by ATR-410 to individual sites in accordance with the MDDF.

b. Factory testing is a contractor responsibility and will be witnessed by FAA personnel. There are four test phases associated with factory testing: 1) inspection, 2) factory subsystem functional, 3) design qualification, and 4) system qualification (functional). Figure 8-1 depicts these test phases, location of the test, whether the test is formal or informal and the production MALA used for specific tests.

(1) Incoming inspection is performed by the contractor. Inspections are informal and verify that all parts, components, PC assemblies and subassemblies conform to applicable standards.

(2) Factory subsystem functional testing is the final phase of factory testing for production articles. These tests are at the subsystem level (i.e., MALA board level) and verify functional requirements of the MALA. Subsystem tests are formal and are performed at the contractor's manufacturing facility.

(3) Design qualification testing consists of formal tests of the integrated system (hardware/firmware/software) to demonstrate conclusively that all hardware functional and physical characteristics and the firmware functional characteristics conform with specification requirements and validate the software interface design. Design qualification will consist of three tests: 1) environmental test, 2) maintainability demonstration, and 3) design qualification demonstration. The first two production MALA's to complete subsystem functional testing will undergo an environmental test and maintainability demonstration. Concurrently, the third and fourth production MALA's shall be installed within an ARTS IIA and used for a contractor design qualification demonstration. The demonstration shall be performed by the contractor using prototype A2.07 level operational software and simulated ASR-9 and Mode S radar inputs. The radar inputs will be generated using a Mode S/ASR-9 Simulator (MASIM) provided to the contractor as GFE. The successful completion of the Design Qualification Demonstration is the criteria for formal acceptance by ANA-140 of the MALA hardware, firmware, and the software interface design. Following completion of the demonstration, the contractor will manufacture, test, and ship MALA kits. In addition, the contractor will integrate the software interface design into the ARTS IIA A2.06 level operational software to produce the A2.07 level operational software. Following completion of A2.07 level operational software production the contractor shall build an operational tape, using site adaptation parameters contained in the universal data set (UDS). The UDS A2.07 level operational software will be used for the system qualification test.

(4) The system qualification test will demonstrate conclusively that all A2.07 level operational software functional characteristics conform with specification requirements specified in the ARTS IIA functional specification. Successful completion of the system qualification test is the criteria for formal ANA-140 acceptance from the contractor, of the A2.07 level operational software. The test is intended to exercise the system operational software in its intended operational environment and will take place at the ACT. The contractor is responsible for installation and checkout of the MALA kit and shipment of the operational software tape to the ACT. Emphasis during the system qualification test will be placed on those functions associated with interfacing to the ACT radars. Regression testing of the equipment and software will also be performed to ensure other ARTS IIA functions continue to operate correctly.

81. CHECKOUT. Checkout is the first phase of hardware onsite testing and is performed by the organization responsible for MALA kit installation (AF or contractor). Checkout activities are the same whether the MALA kit is installed by the contractor or AF. The first step in the process is to execute ARTS IIA A2.06 "system diagnostics" to ensure proper system operation prior to kit installation. MALA kit checkout will be accomplished by executing a series of off-line diagnostic tests designed to verify proper kit installation. The kit will then be installed and MALA local diagnostics will be executed to verify proper MALA installation and operation. The ARTS IIA MALA system diagnostics delivered with the MALA kit will then be executed to verify proper operation of the integrated system in an off-line mode. The ARTS IIA MALA off-line system diagnostics are designed to perform a series of tests to verify the capability of the ARTS IIA processor (LSI 2/40) to control, configure, and communicate with the MALA.

FIGURE 8-1. MALA VERIFICATION PROGRAM (CONTRACTOR INSTALLATION)

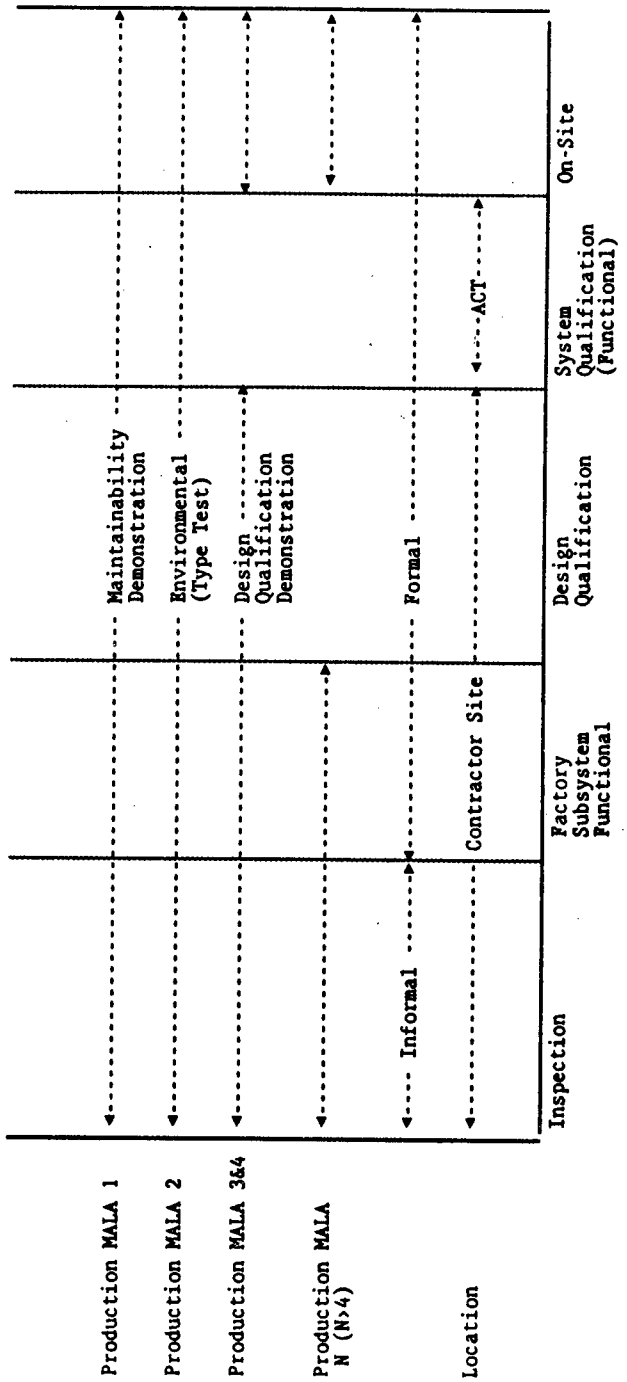

82. CONTRACTOR INTEGRATION. Contractor integration testing is limited to those facilities for which the contractor has MALA kit installation responsibility (i.e., keysite and eight regional facilities). Integration testing at all other facilities is the responsibility of FAA site maintenance personnel. The region shall specify which regional facilities are to be installed by the contractor. Contractor integration testing encompasses those tests at the installation site which verify proper operation of the system after all interfaces have been connected. Following successful completion of installation and checkout, the A2.07 level operational software will be installed and tests of the integrated system will be performed. This test will consist of a combined integration and confidence/stability test. During execution of this test, the system will be placed in test mode. Appropriate scheduled interruption codes shall be used during this period. The purpose and execution of this test is defined in subparagraphs (1) and (2).

a. Following checkout, a 72-hour confidence/stability test, used for engineering purposes only will commence. This 72-hour period is defined as a contiguous segment of time in which no relevant failures occur. The test will be restarted from time zero if a relevant failure occurs. The contractor will be onsite during normal working hours until successful completion of this test.

b. During execution of the confidence/stability test, an integration test of the system will be also be conducted. Integration testing will consist of running the system onsite Test (SOST). The SOST is based on the software portion of the ARTS IIA System Onsite Test modified by the contractor to include tests unique to the MALA interface. The purpose of the test is to verify that the system, both hardware and software, is properly integrated and functions properly. This is done by exercising the operational software. Testing of the interface to the radars will be accomplished in live mode using targets-of-opportunity. Additional tests will be accomplished in training and test mode as a regression test on the system. The primary means of verification is observation of the data on the radar alphanumeric displays subsystem (RADS) and TTY. The tests will exercise the following functions: 1) keyboard input processing, 2) display data formatter, 3) radar system input processing, 4) tracking, 5) console typewriter processing, and 6) Mode S/ASR-9 interface processing.

c. Upon completion of the combined confidence/stability and integration test, the Contractor Acceptance Inspection (CAI) will be conducted by the TOR. If the contractor has successfully performed the combined confidence/stability and integration test, the CAI milestone will designate acceptance of the equipment by the FAA. Successful completion of the CAI also establishes the IOC. IOC is that point during system implementation when hardware and software have been successfully merged and have met contractual requirements.

83. CONTRACTOR ACCEPTANCE INSPECTION (CAI). Upon successful completion of the system qualification test at the ACT, the PM will conduct a CAI of the UDS site adapted operational software. Successful completion of the CAI constitutes formal acceptance by ANA-140 from the contractor of the UDS operational software. Completion of the CAI also signifies the beginning of FAA integration and shakedown testing. CAI's will be conducted for each site adapted operational tape delivered by the contractor. For those MALA kit sites affected by changes in radar coordinates caused by the installation of an ASR-9 and/or Mode S in a location different from the original radar, the CAI will involve an audit by the site of their respective site adaptation data base. This will be accomplished no later than 30 days prior to the sites tape build. For non-kit sites, an audit by the site of

their respective data base will not be required. For kit and non-kit sites there will be an inspection of the site adaptation documentation (plots, computer printouts) after the build and an acceptance test of each operational software tape. The acceptance test will consist of loading the site-specific operational tape into the ACT ARTS IIA and running software exercises to verify selected site adaptation parameters/operations to demonstrate that the proper site adaptation parameter values are stored and functions performed as expected. After CAI, the tapes and documentation will be validated for use by ATR-412, packaged and sent to the site for site shakedown testing.

84. FAA INTEGRATION TESTING. ACN-100 integration testing at the ACT is a one-time test performed prior to delivery to the first operational site. FAA Technical Center integration testing will verify that equipment performs in accordance with the requirements of the specification and the contract when placed in its intended operational environment. These tests will be conducted using both live and simulated data. The simulated data will be provided by a collection of subsystems that are functionally identical to existing equipment or equipment which at some future time will be installed in the field. ACN-100 is the office of primary responsibility for FAA integration testing. ACN-100 will prepare the Integration Test Plan and Procedures and execute the integration test. Testing for the A2.07 level operational software will involve a check of the ARTS IIA interfaced with ACT radar systems. Integration testing will involve checking the system interfaces, running diagnostics, and running SOST procedures to verify requirements have been met.

85. SHAKEDOWN AND CHANGEOVER.

a. System shakedown testing occurs at the ACT and each of the sites. The purpose of shakedown testing at the ACT differs from that of other sites. Shakedown testing at the ACT is for the purpose of ensuring that NAS operational effectiveness and operational suitability requirements are verified prior to delivery to operational sites. Site shakedown testing verifies that the system/equipment as installed, meets contract specification requirements. ASM-400 and ATR-412 are responsible for developing a shakedown test plan and procedures for the ACT shakedown testing. They are also responsible for developing and verifying generic site shakedown test plans and procedures for the field. In addition, the regions are responsible for developing detailed procedures required at individual sites for the conduct of testing and for operations changeover.

(1) Prerequisites for Starting Shakedown Testing.

(a) The contractor shall have demonstrated that each site adapted operational tape complies with all technical and functional requirements of the contract, specification, and amendments.

(b) ATR will have ensured that all deliverables are onsite.

(c) AT personnel are to have completed classroom training and proficiency development in the operation of the radar display. Selected ATC specialists will have completed training for computer operations, system loading, system initialization, memory dumps, and other computer functions for the day-to-day operation of the system.

(d) At least one AF person per site is to have completed the required maintenance training and is to have achieved proficiency in system maintenance procedures.

(2) FAA Technical Center Shakedown. FAA Technical Center shakedown testing shall be accomplished at the ACT. Shakedown testing will verify the MALA kit and A2.07 level operational software are capable of providing the necessary control functions and the ACT's readiness to support operation of the MALA kit and ARTS IIA A2.07 level software. ASM-410 shakedown tests verify the operational suitability and effectiveness of the software/hardware using controllers in a simulated environment. These tests are accomplished using live and simulated data with a collection of subsystems that are functionally identical to existing equipment or equipment which at some future time are going to be installed in the field. ASM-400 shakedown tests verify the operational readiness of the firmware and the maintainability of the equipment.

(a) Shakedown Process. Following contractor installation and checkout of the MALA kit, the ARTS IIA A2.07 level operational software using the UDS site adaptation, will be loaded into the system. The software will then be exercised to demonstrate selected operation of the ARTS IIA. These tests are designed to demonstrate that functions perform as expected when the ARTS IIA is interfaced with ASR-9 and/or Mode S radars. Additional exercises will be performed demonstrating selected parameters and operations to check general site adaptation accuracy. The additional exercises are designed to demonstrate that the proper site adaptation value is stored and that they are interpreted and used correctly by the operational program. At the successful completion of the ACT shakedown testing the ANA-140 program manager will present a report to the EXCOM DRR Board, recommending deployment of the system to the first operational site (keysite).

(b) Shakedown Activities. Shakedown test activities will be accomplished in a simulated environment, to evaluate the following:

1 Operational and maintenance proficiency: site training, personnel readiness, training adequacy.

2 Equipment performance: determination of reliability and maintainability, verification of system performance, failure mode analysis, failure detection and recovery, adequacy of all subsystems.

3 Provisioning: ensuring the availability of field logistic support.

4 Confirmation of completeness of "as built" drawings and instruction book page changes.

5 Software functions: Mode S/ASR-9 interface, validation of site adaptation data, flight plan input, system parameters, Conflict Alert (CA), Minimum Safe Altitude Warning (MSAW), and Aural Alarm.

6 Operational suitability of display data: data blocks, tab lists, registration, CA, MSAW, and Aural Alarm.

7 Adequacy and suitability of procedures and operations.

8 Verification of operations changeover procedures.

(3) Site Shakedown. Following checkout, the sites enter into a system shakedown period to support a determination that the system, in an operational and environment, is ready for full operation. Shakedown confirms the integrated readiness of people, procedures, and the system to assume field operational status. The site shakedown process begins with a confidence/stability test and culminates with establishment of the ORD.

(a) Shakedown Process. The site shakedown process begins with loading of the ARTS IIA A2.07 level operational software, which has been adapted for that site. The system will then be exercised to demonstrate selected operation of the ARTS IIA. These tests are designed to demonstrate that functions perform as expected when the ARTS IIA is interfaced with ASR-9 and/or Mode S radars. Using the site adapted software system peripherals, additional exercises will be performed demonstrating all site adaptation parameters/operations. The additional exercises are designed to demonstrate that the proper site adaptation value is stored and that they are interpreted and used correctly by the operational program.

(b) Shakedown Activities. Tests will be accomplished in the operational environment and will be compatible with normal control of traffic with minimum interference to operations. Site shakedown activities include:

1 Operational and maintenance proficiency evaluation: site training, personnel readiness, training adequacy.

2 Equipment performance: determination of reliability and maintainability, verification of system performance, failure mode analysis, failure detection and recovery, adequacy of all subsystems.

3 Provisioning: ensuring availability of site logistic support.

4 Software functions: validation of site adaptation data, flight plan input, system parameters, CA, MSAW, and Aural Alarm.

(4) ORD. The ORD is determined by the JAI board and establishes the date on which a facility is to be placed into operational use. To accomplish the ORD the facility must satisfy construction, installation, performance, operation, and maintenance criteria. The ORD is the culmination of the site shakedown activity. It formally documents that the facility, system, and equipment is ready to support the real time ATC tasks and the readiness of personnel, procedures, hardware, and software, and support services to support these tasks.

NOTE: Special emphasis will be placed on both equipment performance and the software functions. The adequate testing and possible modification of site adaptation data and system parameters require close coordination of site and test personnel.

b. Changeover. Changeover occurs when MALA kit and A2.07 level operational software is phased into the ongoing ATC operations at a MALA kit site, or when A2.07 level operational software is phased into the ongoing ATC operations at a non-kit site. To minimize any impact to normal operational activities, A2.07 level operational software which has been adapted for the site, will be loaded into the system during low traffic density periods. In accordance with the site operations plans, the software shall then be phased into full time use. The regions/sites are to develop and implement operations changeover plans addressing all activities which shall take place during the JAI and transition to the new operational software

program. The plans shall be in writing and include procedures, schedule phases, changeover techniques, required coordination, and training requirements for phasing the automated system into ongoing operations. The plans shall also include, provisions reporting for all operations changeover associated activities, including the commissioning and operations certification for each automated terminal facility incorporated into the NAS.

86. JOINT ACCEPTANCE INSPECTION (JAI). JAI activities are only applicable to kit sites and shall be conducted in accordance with Order 6020.2, Facility Reference Data File. Accordingly, a JAI board shall be established, for kit sites, to ensure that each ARTS IIA facility meets specified requirements for operation and maintenance, and has demonstrated that the facility is ready to be commissioned. The Joint Acceptance Board, when convened, may include the following representatives:

a. The ANA-140 TO or his/her representative.

b. AF sector manager (or designated person).

c. Regional AT division representative.

d. Air traffic facility manager (or designated person) from the involved facility.

e. Aviation Standards National Field Office, flight inspection field offices, or the regional Flight Standards Division, representatives as appropriate.

f. Logistics division representatives.

g. Other representatives of the regional office, national headquarters, and the ACT, when so selected.

87.-89. RESERVED.

CHAPTER 9. INTEGRATED LOGISTICS SUPPORT (ILS)

90. MAINTENANCE CONCEPT.

a. Hardware maintenance concept for the ARTS I/F with Mode S/ASR-9 project parallels the ARTS IIA project. Failed Mode S/ASR-9 line adapters and associated hardware will be removed from the site and returned to the FAA Logistics Center for repair action. The FAA Logistics Center will send failed MALA boards to UNISYS on an "as required" purchase order basis until Automatic Test Equipment (ATE) and Test Program (TPS) are delivered to the FAA Logistics Center from UNISYS. When received, the TPS's will be used to accomplish in-house repair. The maintenance concept is outlined in the ARTS IIA Integrated Logistics Support Plan, appendix G.

b. Software maintenance rests with ATR-412. The software maintenance support concept will be developed under ATR-412 direction and control. A primary objective is for each site to develop an in-house maintenance capacity at the earliest possible time.

91. TRAINING. Air traffic training will be provided by an FAA Academy-developed briefing guide to be distributed to the regions and sites. Airway facilities training will be incorporated as part of the existing ARTS IIA training at the FAA Academy. Technicians previously trained in ARTS IIA will be provided an FAA Academy-developed self-study course. FAA Logistics Center training requirements are under review.

92. SUPPORT TOOLS AND TEST EQUIPMENT. No additional tools and test equipment are required to support ARTS IIA I/F with Mode S/ASR-9 hardware.

93. SUPPLY SUPPORT. The provisioning levels for spare parts and assemblies were determined through contractor-developed provisioning technical documentation and requirements analyses. This data was utilized to set appropriate sparing levels for the various items and to establish provisioning buy levels. Initial sparing levels, predetermined by the project office, will be filled for both site and FAA Logistics Center by the contractor prior to operational activation of the hardware at the various sites. These initial sparing levels will be determined from data developed and recommendations provided by the contractor under guidance provided within FAA-G-1375b, Spare Parts Peculiar for Electronic, Electrical and Mechanical Equipment. These initial spares will be fully contractor/vendor tested, site accepted, and positioned prior to any system kit acceptance actions at each site. The reorder of follow-on site spares will be accomplished through already established supply channels.

94. DOCUMENTATION. Provisioning technical documentation (PTD) developed under FAA-G-1210D, Provisioning Technical Documentation, requirements, was delivered per the contract. Deliverables included updates to the ARTS IIA PTD and technical data as follows:

a. Long lead items list.

b. Provisioning parts list.

c. Level 3 drawings (as per DOD-D-1000B and DOD-STD-100c).

d. Consumable list.

e. Program data for Read Only Memories (ROM) and Programmable Read Only Memories (PROM).

f. Test equipment list.

g. Tools list.

h. Recommended site spares list.

i. Master pattern and parts breakdown.

ATR-412 and ASM-450 are responsible for appropriate documentation distribution for software and hardware applications respectively.

95. EQUIPMENT REMOVAL No equipment will be removed or displaced by this project.

96. FACILITIES. N/A

97.-99. RESERVED.

CHAPTER 10. ADDITIONAL PROJECT IMPLEMENTATION PLAN ASPECTS

100. CONFIGURATION MANAGEMENT. The CM procedures for the ARTS IIA Enhancement project software will follow the established FAA procedures identified in Order 1800.8E, National Airspace System Configuration Management; and NAS-MD-001, NAS Subsystem Baseline Configuration and Documentation Listing. Configuration management is required during the life cycle of the system. The FAA CO and his/her representatives exercise contract management and administration during system development and production to ensure that the product meets FAA requirements. Any proposed changes to the product baseline must follow the CM procedures and policies identified in Order 1800.8E, for approval and status accounting. The following further defines the CM process.

a. Hardware Configuration Management (HCM). The hardware and firmware product baselines have been established and ASM-400 has assumed CM responsibility. Hardware problem reporting is accomplished via HDR's, firmware via PTR's, prepared by the sites and submitted to ASM-400 in accordance with Order 1100.134A, Maintenance of NAS Automation Subsystems.

b. Software Configuration Management (SCM). Software refers to the operational, non-operational support, and maintenance diagnostic computer program delivered at the time product baseline is established. The product baseline will be established and ANA-140 will assume CM responsibility at the successful completion of the system acceptance test at the ACT. The Automation Software Division (ATR-200) will assume CM responsibilities for operational, diagnostic, and support software upon delivery to the last site.

(1) Software Maintenance. Two branches at the ACT (ATR-410 and ASM-400) maintain the software. Automation Systems, ATR-410, will be responsible for the operational software (including site adaptation software and associated documentation). ASM-400 will be responsible for maintenance of diagnostic software and the associated documentation.

(2) Software technical problems observed/suspected are reported via PTR's. PTR's are completed by the ARTS IIA sites and forwarded to ATR-410 for operational software and ASM-400 for diagnostic software, in compliance with paragraph 12 of Order 1100.134A. New system tapes, with corrections to the PTR's, will be provided to the sites.

c. Reviews and Audits. Configuration reviews and audits shall be conducted to verify that the level of performance achieved for each subsystem at that point in the life cycle is as specified. Reviews shall examine the different levels of specification documentation approved before proceeding with the development. Configuration audits shall be accomplished to verify documentation against previous baselines and added changes as well as compare the configuration against the approved configuration identification document.

APPENDIX 1. PERTINENT ARTS IIA SCHEDULES
TABLE 1. COMPLETED MILESTONES

ACTIVITY DESCRIPTION	ACTUAL FINISH
Contract Awarded	Nov 14, 1986
Preliminary Design Review	Sep 22, 1987
Critical Design Review	Oct 14, 1988
Provisioning/Spares Conference	Nov 17, 1988
Provisioning Technical Documentation/LSA Data Delivered	Nov 8, 1988
Integrated Logistics Support Plan Approved	Nov 8, 1988
Factory Acceptance Test Plan Approved	Dec 13, 1988
Factory Acceptance Test Completed	Dec 16, 1988
Initial Deployment Readiness Review (SEI)	Apr 20, 1989
Receive Baseline Software from Project 2-06	May 12, 1989

TABLE 2. MILESTONES TO COMPLETE

ACTIVITY DESCRIPTION MILESTONE	DATE
ASM-400 Shakedown Test Plan Approved	Jun 90
ACN-100 Integration Test Plan Approved	Jun 90
Site Acceptance Test Plan Approved	Jun 90
Factory Acceptance Test Complete (A2.07 software)	Nov 91
ATR-240 Shakedown Test Complete	Feb 91
ASM-400 Shakedown Test Complete	Feb 91
ACN-100 Integration Test Complete	Feb 91
DRR Report delivered to AND-2	Feb 91
System Delivery to the FAA Academy	Mar 91
System Delivery to Test & Evaluation Site (ACT)	Mar 91
Site Spares Delivery	Mar 91
System Delivery to First Operational Site	Mar 91
Site Acceptance & Integration Test Complete	Apr 91
First ORD Complete	Jun 91
Delivery to Last Operational Site	Mar 92
Last Site Acceptance Test completed	Mar 92
Last ORD Complete	Apr 92

TABLE 3. SITE INTERDEPEDENCY MATRIX

(IN ALPHABETICAL ORDER)

SITE	LOCATION ID	REGION	TO RECEIVE ASR-9	TO RECEIVE MODE-S	TO RECEIVE BOTH RADAR
ABILENE-DYESS	TX DYS	ASW		X	
ACADEMY DEPO RELOC	OK ACC				
ANCHORAGE	AK ANC	AAL		X	
ASHEVILLE	NC AVL	ASO	X		
ATLANTIC CITY	NJ ACY	AEA	X		
AUGUSTA	GA AGS	ASO		X	
AUSTIN	TX AUS	ASW			X
BAKERSFIELD	CA BFL	AWP		X	
BANGOR	ME BGR	ANE		X	
BILLINGS	MT BIL	ANM		X	
BISMARK	ND BIS	AGL		X	
BRISTOL/TRI-CITIES	TN TRI	ASO		X	
CEDAR RAPIDS	IA CID	ACE			X
CHAMPAIGN	IL CMI	AGL		X	
CHARLESTON	SC CHS	ASO			X
CHARLESTON	WV CHW	AEA		X	
CHATTANOOGA	TN CHA	ASO		X	
CLARKSBURG	WV CKB	AEA		X	
CORPUS CHRISTI	TX CRP	ASW		X	
DAYTONA BEACH	FL DAB	ASO	X		
DENVER FAATC R&D	NJ N/A	ACT			
DEPO (FAATC SYS 2)	OK N/A	AAC			
DOWN. FAA DEPO HOT	OK N/A	AAC	X		
DULUTH	MN DLH	AGL		X	
ERIE	PA ERI	AEA		X	
EUGENE	OR EUG	ANM		X	
EVANSVILLE	IN EVV	AGL		X	
FAATC (POUGH)	NJ N/A	ACT			X
FAATC REL M. LAKE	NJ N/A	ACT			
FAATC SYS 1	NJ N/A	ACT			
FARGO	ND FAR	AGL		X	
FRESNO	CA FAT	AWP		X	
FT SMITH	AR FSM	ASW		X	
FT WAYNE	IN FWA	AGL			X
GRAND RAPIDS	MI GRR	AGL			X
GREAT FALLS	MT GTF	ANM		X	
GREENBAY	WI GRB	AGL		X	
GREENSBORO	NC GSO	ASO	X		
HARRISBURG	PA HAR	AEA			X
HUNTINGTON	WV HTW	AEA		X	
HUNTSVILLE	AL HSV	ASO	X		
JACKSON	MS JAN	ASO		X	
KNOXVILLE	TN TYS	ASO			X

TABLE 3. SITE INTERDEPENDENCY MATRIX

(IN ALPHABETICAL ORDER)

SITE	LOCATION ID	REGION	TO RECEIVE ASR-9	TO RECEIVE MODE-S	TO RECEIVE BOTH RADAR
LAFAYETTE	LA LFT	ASW		X	
LAKE CHARLES	LA LCH	ASW		X	
LITTLE ROCK	AR LIT	ASW		X	
LONGVIEW	TX GGG	ASW		X	
LUBBOCK-REESE	TX LBB	ASW			X
MACON-WAR ROE	GA WRB	ASO		X	
MADISON	WI MSN	AGL			
MERIDIAN	MS NMM	ASO		X	
MIDLAND	TX MAF	ASW		X	
MONROE	LA MLU	ASW		X	
MONTGOMERY-MAXWELL	AL MXF	AWO			X
MOSES LAKE	WA N/A	ANM	X		
OKC ACADEMY SYS-1	OK N/A	AAC			X
OKC ACADEMY SYS-2	OK N/A	AAC			
PASCO	WA N/A	ANM	X		
PENSACOLA	FL PNS	ASO		X	
PEORIA	IL PIA	AGL		X	
PORTLAND	ME PWM	ANE		X	
RENO	NV RNO	AWP		X	
RICHMOND	VA RIC	AEA			X
RIO GRANDE	TX HRL	ASW			X
ROANOKE	VA ROA	AEA		X	
ROCHESTER	MN RST	AGL		X	
SANTA BARBARA	CA SBA	AWP		X	
SIOUX CITY	IA SUX	ACE		X	
SPOKANE	WA GEG	ANM		X	
SPRINGFIELD	MO SGF	ACE		X	
TALLAHASSEE	FL TLH	ASO		X	
TOLEDO	OH TOL	AGL	X		
WACO	TX ACT	ASW		X	
WICHITA	KS ICT	ACE			X
WILKES-BARRE	PA AVP	AEA		X	
WILMINGTON	NC ILM	ASO		X	

APPENDIX 2. PROJECT CONTACTS

AEA Region Project Managers

Mr. Michale Lanz (AEA-432) FAA Regional HQ - EA JFK International Airport Fitzgerald Federal Bldg. Jamaica, N.Y. 11430	FTS 667-1198 (718) 917-1198
Mr. Nate Stevens (SEI) Martin Marietta - ATC JFK International Airport Fitzgerald Federal Bldg. Jamaica, N.Y. 11430	FTS 667-1285 (718) 917-1285

ACE Region Project Managers

Mr. Greg Ball (SEI) Martin Marietta - ATC FAA Regional HQ - ACE 601 East 12th Street, Room 1564 Kansas City, MO 64106	FTS 867-3261 (816) 426-3261
Mr. Lee Riffel (ACE-425) FAA Regional HQ - ACE 601 East 12th Street Kansas City, MO 64106	FTS 867-5676 (816) 426-5676
Mr. John Mayorga (ACE-510) FAA Regional HQ - ACE 601 East 12th Street Kansas City, MO 64106	FTS 867-3400 (816) 374-3400

AAL Region Project Managers - FAA

Mr. Leonard Grau (AAL-454A) FAA Regional Headquarters - AAL 701 "C" Street (Box 14) Anchorage, AK 99513	FTS (none) (907) 271-5222
Mr. Mike Chambers (SEI) Martin Marietta - ATC FAA Regional Office 701 "C" Street (Box 14) Anchorage, AK 99513	FTS (none) (907) 271-5794

ANE Region Project Managers

Mr. Bill Tretter (ANE-420) FAA Regional HQ - NE 12 New England Exec. Park Burlington, MA 01803	FTS 836-7211 (617) 273-7211

PROJECT CONTACTS (Cont.)

Mr. Bill Minerick (SEI)
Martin Marietta - ATC
FAA Regional HQ - NE
12 New England Exec. Park — FTS 836-7294
Burlington, MA 01803 — (617) 273-7294

AWP Region Project Managers
Mr. Mickey Martinez (AWP-420)
FAA Regional HQ - AWP
1500 Aviation Blvd. — FTS 984-1079
Lawndale, CA 90261 — (213) 297-1079

Mr. John Helsa (SEI)
Martin Marietta - ATC
1500 Aviation Blvd. — FTS 984-1770
Lawndale, CA 90261 — (213) 297-1770

ANM Region Project Managers
Mr. Lee Slaughter (ANM-455)
FAA Regional HQ - NM
Airway Facilities Div.
17900 Pacific Hwy. South
C-68966 — FTS 446-2455
Seattle, WA 98188 — (206) 431 2455

Mr. Marshall Ojeda (SEI)
Martin Marietta - ATC
SEA-TAC Office Center
Suite 608
18000 Pacific Hwy. South — FTS 446-2037
Seattle, WA 98188 — (206) 244-2037

AGL Region Project Managers
Mr. Gary St. John (AGL-420)
FAA Regional HQ - GL
2300 East Devon — FTS 384-7490
Des Plaines, IL 60018 — (312) 694-7490

Mr. Jack Albrecht (SEI)
Martin Marietta - ATC
FAA Regional HQ - GL
2300 East Devon, Suite 223 — FTS 384-7782
Des Plaines, IL 60018 — (312) 694-7782

PROJECT CONTACTS (Cont.)

ASW Region Project Managers
Mr. Ron Clark (ASW-421)
FAA Regional HQ - SW
4400 Blue Mound Road — FTS 734-5425
Fort Worth, TX 76101 — (817) 624-5425

Mr. Joe Crees (SEI)
Martin Marietta - ATC
FAA Regional HQ - SW
4400 Blue Mound Road — FTS 734-5635
Fort Worth, TX 76101 — (817) 624-5635

ASO Region Project Managers
Mr. Jim Garrett (ASO-422)
FAA Regional HQ - SO
3400 Norman Berry Drive — FTS 246-7371
East Point, GA 30344 — (404) 761-7371

Mr. Darrall Salter (SEI)
Martin Marietta - ATC
3420 Norman Berry Drive
Suite 524 — FTS 246-7995
Hapeville, GA 30354 — (404) 761-7995

ARTS IIA Project Manager
Robert Voss (ANA-140)
800 Independence Ave, S.W. — FTS 267-8349
Washington, D.C. 20591 — (202) 267-8349

ARTS IIA Project Team Lead
John Horrocks (ANA-140)
800 Independence Avenue, S.W. — FTS 267-8364
Washington, D.C. 20591 — (202) 267-8364

ARTS IIA Project Lead
Joe Keifer (ANA-140)
800 Independence Avenue, S.W. — FTS 267-8351
Washington, D.C. 20591 — (202) 267-8351

ARTS IIA Project Lead
Dori Callahan (ANA-140)
800 Independence Avenue, S.W. — FTS 267-8363
Washington, D.C. 20591 — (202) 267-8363

ARTS II Project Lead (SEI)
Luis Laboy, (A340)
475 School Street, S.W. — FTS 967-5792
Washington, D.C. 20024 — (202) 646-5792

PROJECT CONTACTS (Cont.)

Contracting Specialist	
Debra Wilson (ALG-310)	
800 Independence Avenue, S.W.	FTS 267-3105
Washington, D.C. 20591	(202) 267-3105
Maintenance Engineering	
Bob Klose (ASM-120)	
800 Independence Avenue, S.W.	FTS 267 3628
Washington, D.C. 20591	(202) 267-3628
Automation Software	
John Oszezakiewicz (ATR-210)	
800 Independence Avenue, S.W.	FTS 267-9383
Washington, D.C. 20591	(202) 267-9383
FAA Technical Center System Evaluation	
Bob Wilson (ACN-110)	
Federal Aviation Administration	
Technical Center	FTS 482-5473
Atlantic City Airport, New Jersey 08405	(609)484-5473
FAA Technical Center Shakedown Testing	
Luan Jones (ASM-440)	
Federal Aviation Administration	
Technical Center	FTS 482-6488
Atlantic City Airport, New Jersey 08405	(609) 484-6488
FAA Technical Center Software Field Support	
Eugene Leper (ATR-412)	
Federal Aviation Administration	
Technical Center	FTS 482-6351
Atlantic City Airport, New Jersey 08405	(609) 484-6351
Training-Maintenance, Operations	
Billy Van Dorn	
800 Independence Avenue, S.W.	FTS 267-0379
Washington, D.C. 20591	(202) 724-0379
Training-Requirements	
Richard Acosta (ATZ-100)	
800 Independence Avenue, S.W.	FTS 267-9210
Washington, D.C. 20591	(202) 267-9210
Training Analyst	
Charles Stevens (Logicon),(SEI)	
475 School Street, S.W.	FTS 967-5466
Washington, D.C. 20024	(202) 646-5466

PROJECT CONTACTS (Cont.)

Training-Technical
Jane May (AHT-400)
800 Independence Avenue, S.W. — FTS 366-7024
Washington, D.C. 20591 — (202) 366-7024

FAA Academy
Steve Mason (AAC-944C)
Mike Monroney Aeronautical Center
6500 South MacArthur
P.O. Box 25082 — FTS 747-4857
Oklahoma City, Oklahoma 73125 — (405) 686-4857

FAA Academy
Wendell Routon (AAC-934B)
Mike Monroney Aeronautical Center
6500 South MacArthur
P.O. Box 25082 — FTS 747-4347
Oklahoma City, Oklahoma 73125 — (405) 686-4347

FAA Logistics Center
Jerald Wolf, Engineering Section (AAC-445)
Mike Monroney Aeronautical Center
6500 South MacArthur Blvd.
P.O. Box 25082 — FTS 747-5239
Oklahoma City, OK 73125 — (405) 680-5239

FAA Logistics Center
Jone Eckard
NAS Project Engineering and Provisioning Section (AAC-485)
Mike Monroney Aeronautical Center
6500 South MacArthur Blvd.
P.O. Box 25082 — FTS 747-5239
Oklahoma City, OK 73125 — (405) 680-5239

Mitre, Consultant
Bob Geoghan
MITRE Corporation
c/o FAA Technical Center
Atlantic City Airport — FTS 482-4155
Atlantic City, New Jersey 08405 — (609) 484-4155

Logistics Specialist
Linda Hoeft, DC-3640 (SEI)
475 School Street, S.W. — FTS 967-6926
Washington, D.C. 20024 — (202) 646-6926

Configuration Management
Ronnie Raffensparger, DC-3240 (SEI)
475 School Street, S.W. — FTS 967-6976
Washington, D.C. 20024 — (202) 646-6976

APPENDIX 3. LIST OF DOCUMENTS

MIL-STD-1388-1A	Logistics Support Analysis, dated 04/11/83
DOD-D-1000B	Drawings, Engingeering and Associated Lists, dated 05/13/83
DOD-STD-100C	Engineering Drawing Practices, dated 04/5/83
Order 1800.8E,	National Airspace System Configuration Management, dated 07/11/85
Order 6190.8	ARTS IIA/TPX-42 Project Implementation Plan, dated 06/12/87
Order 6200.4D	Test Equipment Management Handbook, dated 2/89
Order 1100.134A	Maintenance of NAS Automation Subsystems, dated 06/27/73
Order 4620.3C	Initial Support for New or Modified Equipment, dated 11/22/74
Order 4250.9	Field Inventory Management and Replacement, dated 06/22/66
Order 4660.1	Real Property, dated 02/69
Order 4650.7	Management of Project Material, dated 05/3/68
DTFA01-82-C-10008	ARTS II Enhancement Contract, dated 03/16/82
DTFA01-85-C-00040	ARTS II Upgrade Contract, dated 07/15/85
TM-PA-0018/071/00-2	Mode S to ASR-7/ARTS IIA ICD, dated 03/16/87
TM-PA-0018/072/00-1	Mode S to ASR-8/ARTS IIA ICD, dated 03/16/87
FAA Order 6030.45	Facility Reference Data File, dated 02/11/87
TM-PA-0040/011/04A	ARTS IIA to BRITE ICD, dated 06/29/89
FAA-STD-024A	Preparation of Test & Evaluation Documentation, dated 09/26/85
Order 7110.65F	Operations & Procedures Handbook, dated 09/21/89
Order 1810.4A	FAA NAS Test & Evaluation Program, dated 02/14/89
Order 1750.6	NAS Documentation Facility, dated 12/31/85
FAA Form 4250-3	Stock Selection, dated 01/74
FAA Form 4650-12	Materiel Requisition/Issue/Receipt, dated 07/87