ORDER

6470.35

FLIGHT DATA INPUT/OUTPUT SYSTEM PROJECT IMPLEMENTATION PLAN

January 29, 1988

DEPARTMENT OF TRANSPORTATION
FEDERAL AVIATION ADMINISTRATION

Distribution: A - W/(PS/LG/AP/TR/TO/ES/SM) - 2
A - X(AF/AT) - 2; A - YZ - 2;
A - FAT - 1, 2 (ltd) A - FAF - 3 (ltd)

Initiated By: AAP-310

FOREWORD

This order promulgates the Flight Data Input/Output (FDIO) System Project Implementation Plan. The plan provides information on the activities that must be taken to implement the FDIO as part of the overall National Airspace System (NAS). It contains activity descriptions, equipment functional descriptions, program requirements, organizational responsibilities and implementation schedule. Since the FDIO System has been contractually delivered by the development contractor and accepted by the FAA, the FAA is fully responsible for the operational commissioning of this system.

Leland F. Page
Director,
Automation Service

TABLE OF CONTENTS

	Page No.
CHAPTER 1. GENERAL	1
1. Purpose	1
2. Distribution	1
3. Background	1
4. Authority to Change this Order	1
5.-19. Reserved	1
CHAPTER 2. PROJECT OVERVIEW	9
20. Synopsis	9
21. Purpose	9
22. History	9
23.-29. Reserved	9
CHAPTER 3. PROJECT DESCRIPTION	11
30. Functional Description	11
31. Physical Description	11
Figure 3-1. System Functional Block Diagram	12
Figure 3-2. CCU/PCU Cabinet Configuration	13
Figure 3-3. RCU Cabinet Configuration	15
Figure 3-4. Replacement Flight Strip Printer	17
Figure 3-5. Replacement Alphanumeric Keyboard (RANK) Layout	18
32. System Requirements	19
33. Interfaces	19
Figure 3-6. Cathode Ray Tube (CRT) Display	20
34.-39. Reserved	19
CHAPTER 4. PROJECT SCHEDULE AND STATUS	27
40. Project Schedule and General Status	27
41. Milestone Schedule Summary	27
Figure 4-1. Milestone Schedule Summary	28
Table 4-1. Reserved	29
Table 4-2. Tentative FDIO ORD Dates	30
42. Interdependencies and Sequence	27
43.-49. Reserved	31
CHAPTER 5. PROJECT MANAGEMENT	37
50. Project Management, General	37
51. Project Contacts	37
52. Project Coordination	40
53. Project Responsibility Matrix	40
54. Project Managerial Communications	41

Page No.

55. Implementation Staffing 41
56. Planning and Reports 41
57. Applicable Documents 41
58.-59. Reserved 42

CHAPTER 6. PROJECT FUNDING 49

60. Project Funding Status, General 49
61.-69. Reserved 49

CHAPTER 7. DEPLOYMENT 53

70. General Deployment Aspects 53
71. Site Preparation 54
72. Delivery 54
73. Installation Plan 55
74. Regional Configuration Alternatives 55
75.-79. Reserved 56

CHAPTER 8. VERIFICATION 59

80. Factory Verification 59
81. Checkout 59
82. Reserved 59
83. Reserved 59
84. FAA Integration Testing 59
85. Test and Evaluation 59
86. Joint Acceptance Inspection (JAI) 61
87.-89. Reserved 61

CHAPTER 9. INTEGRATED LOGISTICS SUPPORT 67

90. General 67
91. Maintenance Concept 68
92. Training 69
93. Support Tools and Test Equipment 69
94. Supply Support 69
95. Documentation 69
96. Equipment Removal 69
97. Facilities 70
98.-99. Reserved 70

CHAPTER 10. ADDITIONAL PROJECT AND IMPLEMENTATION ASPECTS 77

100. "Black Box" Implementation 77
101. "Blue Box" Implementation 77
102. DOD FDIO Implementation 77
103.-109. Reserved 77

CHAPTER 1. GENERAL

1. PURPOSE. This order transmits the Flight Data Input/Output (FDIO) System Implementation Plan. It provides for the FAA in-house follow-on effort to operationally implement FDIO at the field sites. AAP-310 will continue to perform Project Management, and all FAA follow-on efforts will be conducted according to this order. Since the FDIO System has been contractually delivered by the development contractor and accepted by the FAA, the FAA is fully responsible for the operational commissioning of this system.

2. DISTRIBUTION. This order is distributed to the division level in the Automation, System Maintenance, Program Engineering, System Engineering, Acquisition and Materiel, Air Traffic Operations and Air Traffic Plans and Requirements Services and to the division level at the FAA Technical Center; to the division level at the FAA Aeronautical Center; to the regional Air Traffic and Airway Facilities Divisions, and to the Airway Facilities Centers and Airport Traffic Control Towers, Air Route Traffic Control Centers.

3. BACKGROUND.

a. The FDIO system was initially scheduled to be operational by June 1987, as described in the original Flight Data Input/Output System Program plan, distributed in May 1986.

b. FAA decisions to delay full implementation of FDIO until the Post-Host Computer System timeframe fragmented and nullified many provisions of the original plan, and required the installation of interim systems to replace the maintenance intensive flight strip printers in the field. Full commissioning is now planned to be done in stages between mid-1988 and early-1989. The full system requirement is based on a need for meeting remote site tower requirements which cannot be met by the interim system. Also, the interim system was not designed to standards which support longer term use.

c. FDIO system equipment has been delivered to all ARTCCs, ATCTs and military warehouses, the FAA academy and Depot, and the FAA Technical Center. In most cases, this equipment has been tested and stored, awaiting the necessary central computer (Host Computer System or HCS) software and necessary changes to the FDIO firmware to allow operational use.

d. The Air Traffic operational software modified for FDIO is scheduled to be released in March 1988, which will permit the final integration and testing of FDIO, leading to ORD of the full system starting in May 1988.

4. AUTHORITY TO CHANGE THIS ORDER. The order may only be changed by the FDIO Program Manager, En Route Automation Branch, AAP-310.

5.-19. RESERVED.

CHAPTER 2. PROJECT OVERVIEW

20. SYNOPSIS. This plan provides for the events leading to a final transition to FDIO. Additionally, separate appendixes describe the interim systems developed to allow early use of FDIO peripheral equipment in the operational facilities.

21. PURPOSE. This order is issued to replace the original FDIO Program Plan, which showed the FDIO as completed and commissioned shortly following FAA system acceptance from the contractor. This order provides for FAA in-house follow-on effort to operationally implement the FDIO system.

22. HISTORY. See Chapter 1, para. 3, Background.

23.-29. RESERVED.

CHAPTER 3. PROJECT DESCRIPTION

30. FUNCTIONAL DESCRIPTION. The system which will replace the existing FDEP and FSP systems will duplicate all of the functions of the present systems, while providing extended capabilities. A discussion of these functions follows. Flight strips will be displayed as they are on the present system. In addition, a display compose cathode ray tube (CRT) unit will be included. The CRT capability will be included as a function at all terminal sites. A replacement alphanumeric keyboard (RANK) shall provide for data entry as in the current system. The replacement system will use central control units (CCU) at each central computer complex (CCC) and remote control units (RCU) at each remote site. The CCU will provide an interface with the CCC via a general purpose input/general purpose output (GPI/GPO) adapter pair, and will drive up to 28 high-speed (2400 bits per second) lines, each of which will be connected to one RCU. The RCU has capability to control local functions for up to five replacement alphanumeric keyboards, five CRT and ten replacement FSP (RFSP). The implementation configuration will be adapted in software to support only three RFSPs, two CRTs and two replacement keyboards. The printer control unit (PCU) located at the CCC will interface a GPI/GPO pair to up to 28 RFSP. The system is designed so that there is no single point of failure within an ARTCC. Figure 3-1, System Functional Block Diagram, represents the overall diagram of the FDIO system, as it relates to the Peripheral Adapter Module.

31. PHYSICAL DESCRIPTION.

a. Central Control Unit (CCU).

(1) The CCU uses microprocessor technology. Performance specifications are as follows:

(a) Provides parallel/serial and EBCDIC/ASCII conversion.

(b) Provides multiplexing/demultiplexing for up to 28 high-speed lines, each of which may be connected to one or more terminals.

(c) Provides data error detection/retransmission of data to/from the RCU.

(d) Provides local buffering of incoming and outgoing messages.

(e) Operates on the critical power bus, where available.

(f) Operates on/off line self-diagnosis.

(g) Provides secondary maintenance output channel.

(h) Provides switching for input/output (I/O) lines for main and standby unit.

(2) Figure 3-2, CCU/PCU Cabinet Configuration, depicts the planned cabinet configuration for these units.

Figure 3-1. System Functional Block Diagram

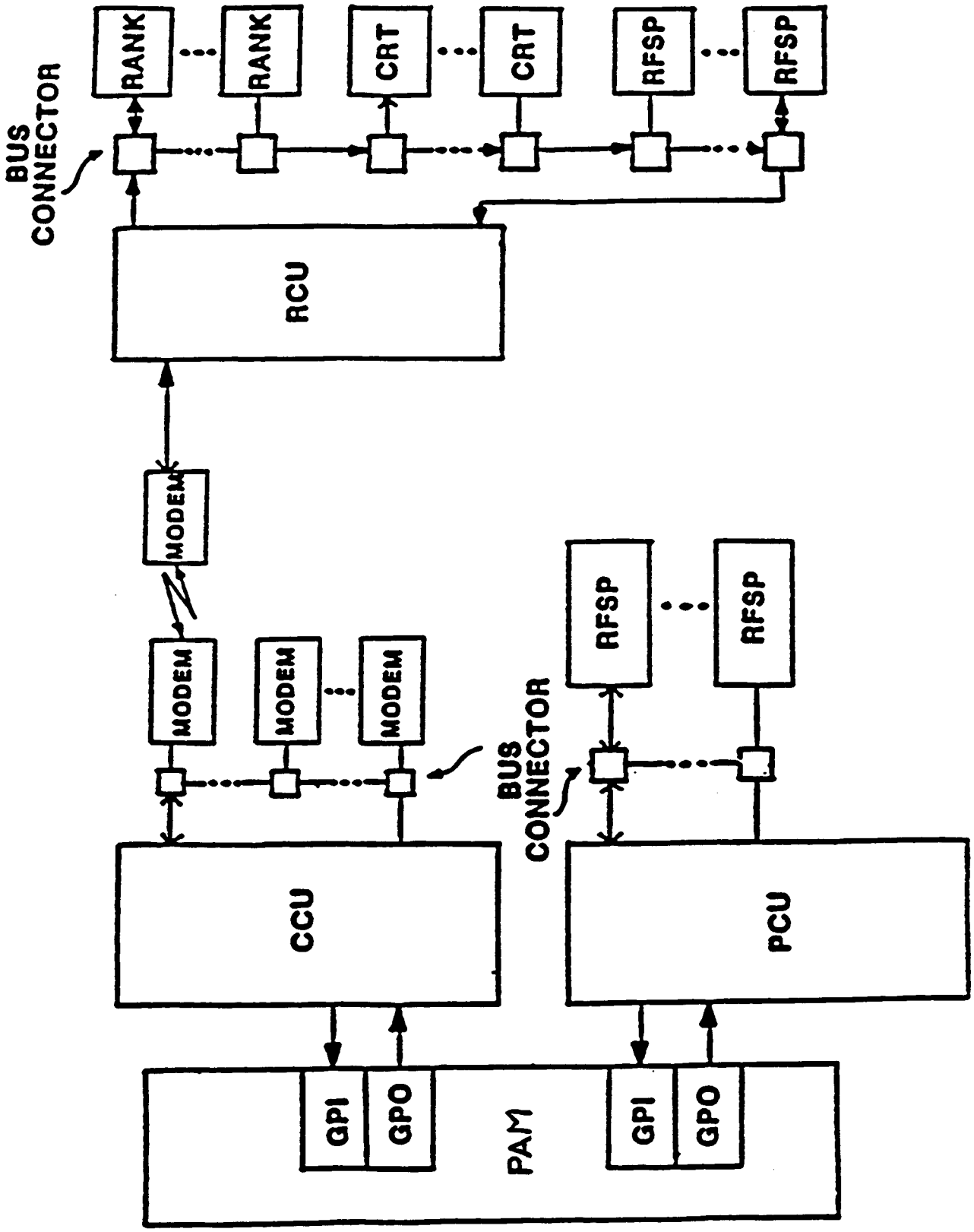

Figure 3-2. CCU/PCU Cabinet Configuration

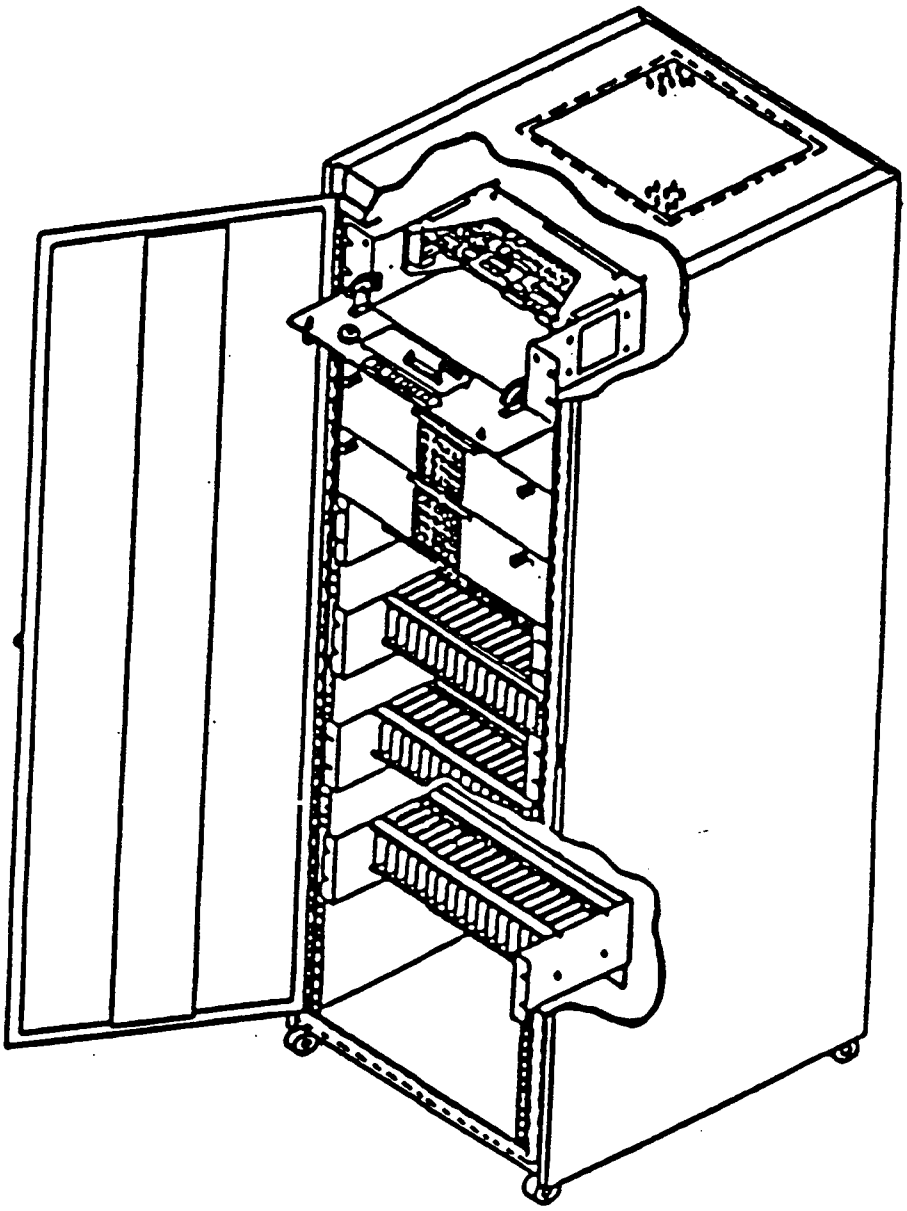

b. Remote Control Unit (RCU).

(1) The RCU specifications are as follows:

(a) Functionally replaces the data communications control unit (DCCU).

(b) Provide serial output ports to the modem, replacement alphanumeric keyboard, replacement FSP and CRT.

(c) Provides data error detection/retransmission of data to/from the CCU.

(d) Provides self-initiation upon the application of power.

(e) provides on/off line self-diagnosis.

(f) Provides data error detection/display of data to/from replacement ANK, CRT and replacement FSP.

(g) Provides local buffering of messages.

(h) Operates on the critical power bus, where available.

(i) Monitors keyboard entries for error in format and entry range.

(j) Provides error message display via CRT and/or replacement FSP.

(k) Provides secondary maintenance output channel.

(2) Figure 3-3, RCU Cabinet Configuration, is a layout of the RCU.

c. Printer Control Unit (PCU).

(1) The PCU is constructed of the same hardware modules that are used in the CCU. Performance specifications are as follows:

(a) Provides parallel/serial and EBCDIC/ASCII conversion.

(b) Provides multiplexing/demultiplexing for up to 28 replacement FSP.

(c) Provides data error detection/display for data flow between PCU and replacement FSP.

(d) Provides self-initiation upon application of power.

(e) Provides local message buffering.

Figure 3-3. RCU Cabinet Configuration

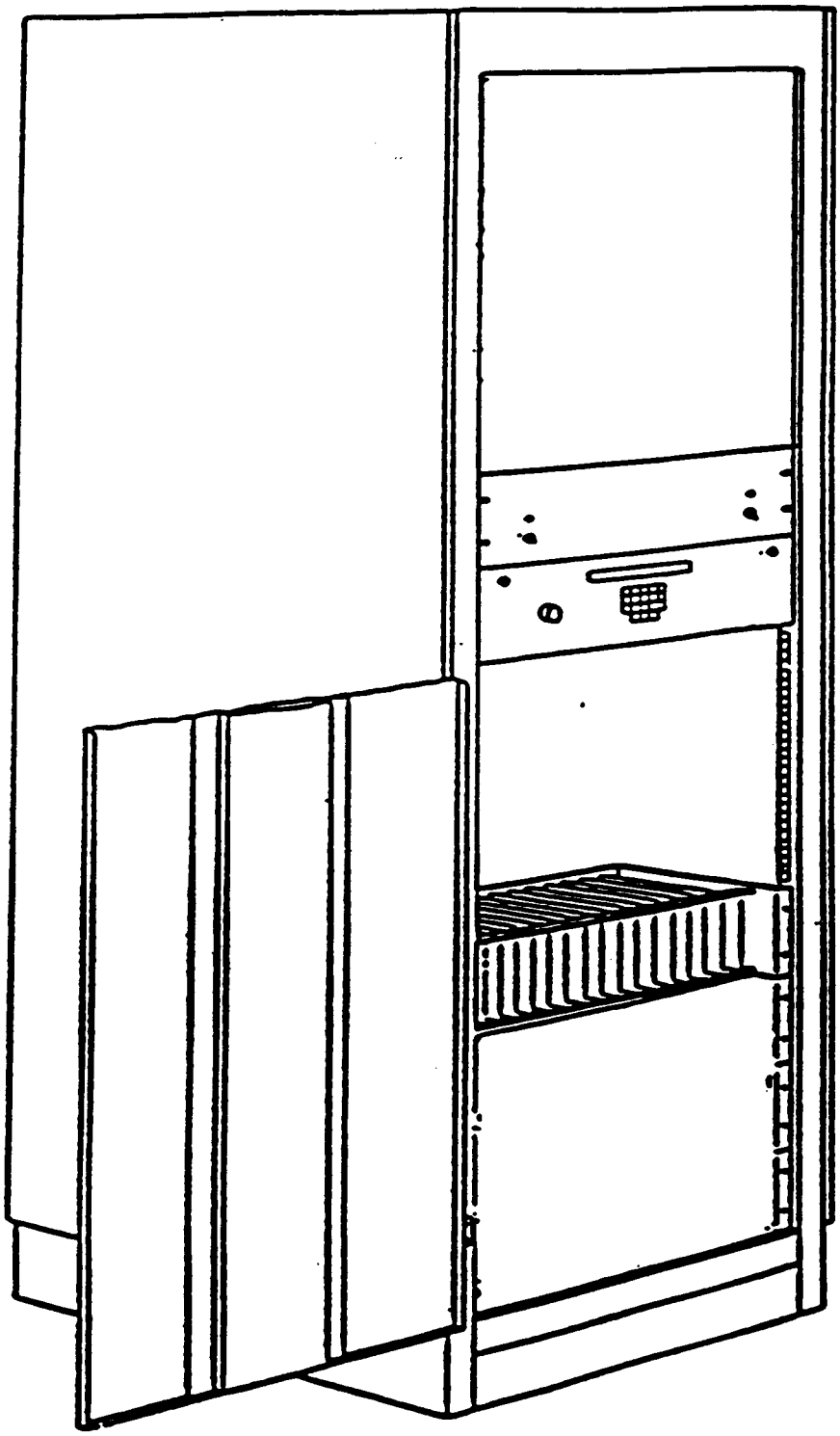

(f) Provides secondary maintenance output channel.

(g) Provides switching for input/output lines for main and standby PCU.

(h) Operates on the critical power bus, where available.

d. Replacement Flight Strip Printer (RFSP).

(1) The replacement flight strip printer performance specifications are as follows:

(a) Operates on RS-422 interface.

(b) Uses ASCII code as modified for ATC.

(c) 30 characters per second print rate.

(d) Character set is the same as existing FSP.

(e) Provides out-of-forms indication.

(f) Provides flagging of parity errors.

(g) Provides message received acknowledgment.

(h) Automatic Form Loading.

(2) Figure 3-4, Replacement Flight Strip Printer, depicts the appearance of the printer.

e. Replacement Alphanumeric Keyboard (RANK).

(1) The performance specifications of the replacement alphanumeric keyboard are as follows:

(a) Generates ASCII codes.

(b) Generates control codes for cursor and editing functions.

(c) Generates enter code.

(2) Figure 3-5, RANK Layout, is the layout of the replacement alphanumeric keyboard.

f. CRT Display.

(1) There is no direct correlation between the CRT and existing FDEP hardware. In general, it will be a stand-alone unit interfaced with the RCU. It will be used in association with a replacement alphanumeric keyboard, as a

Figure 3-4. Replacement Flight Strip Printer

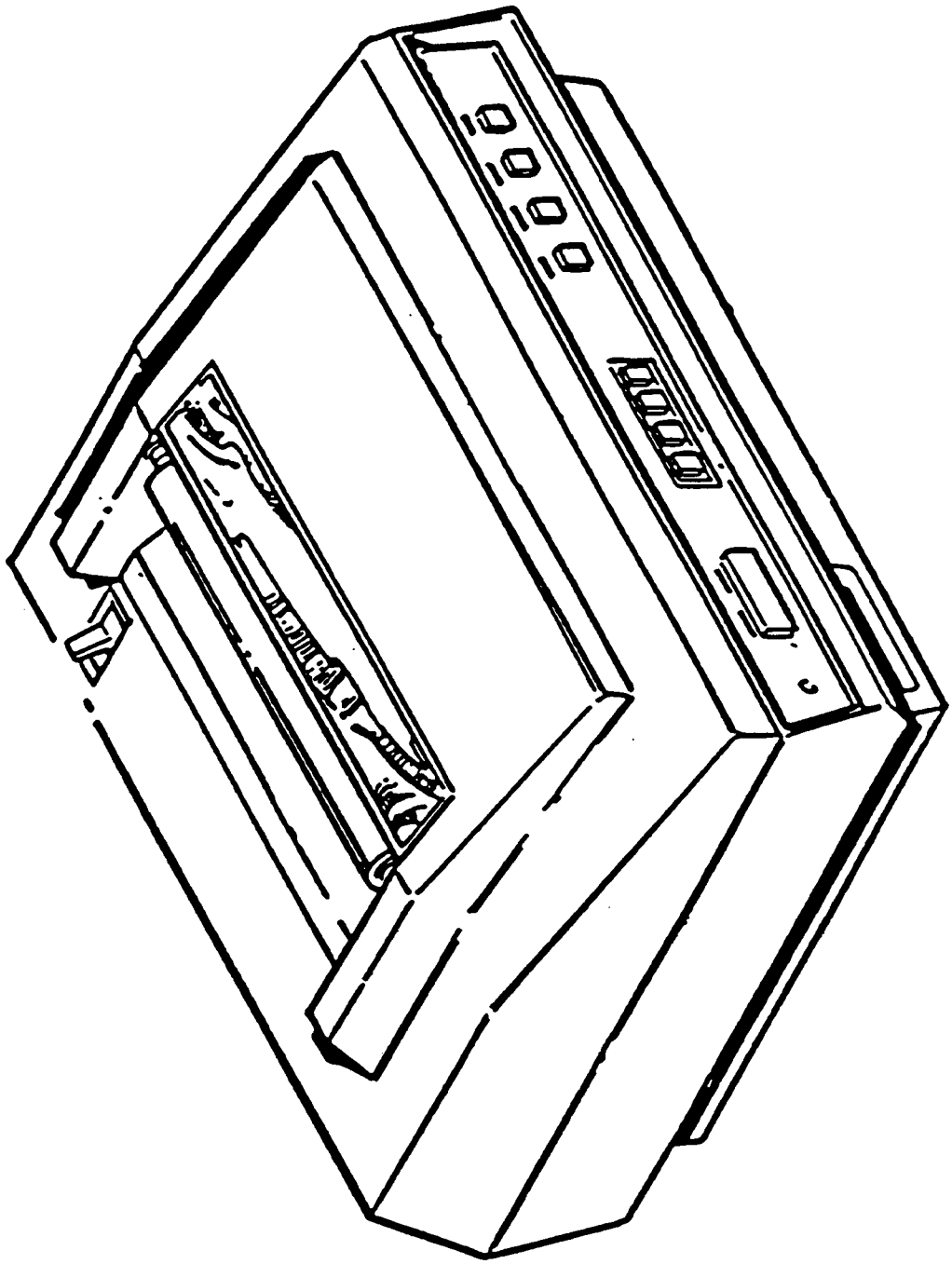

Figure 3-5. Replacement Alphanumeric Keyboard (RANK) Layout

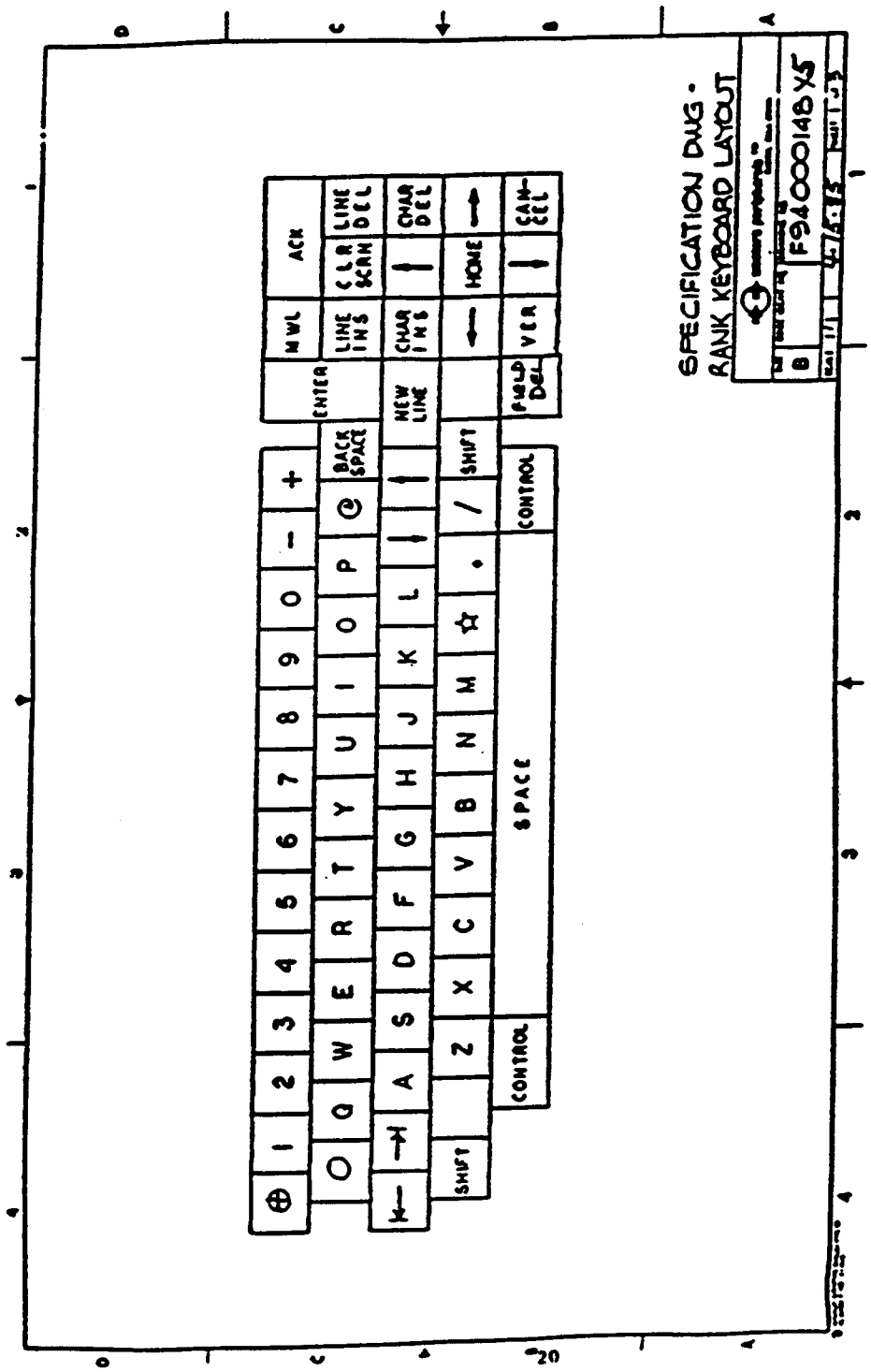

previewing area for the composition of messages. In addition, the CRT units associated with keyboards may be used to display weather messages, general information and if the RFSP is unavailable, flight plans. The CRT meets the following specifications:

(a) Display 24 lines of 80 characters each.

(b) Areas for preview, FS, WX and GI Message Display.

(c) Character set corresponds to the keys on the replacement alphanumeric keyboard.

(2) Figure 3-6, is a picture of the Cathode Ray Tube (CRT) Display.

32. SYSTEM REQUIREMENTS. (Reference FAA-E-2711A, Flight Data Input/Output System Specification)

a. Reliability & maintainability requirements are specified as follows:

(1) Reliability

(a) CCU (Meantime Between Failures (MTBF) 10,000 hours
(b) RCU MTBF 10,000 hours
(c) PCU MTBF 10,000 hours
(d) RANK MTBF 10,000 hours
(e) CRT MTBF 10,000 hours
(f) RFSP MTBF 90 days @ 1000 strips/day

(2) Maintainability

(a) CCU Meantime to Repair (MTTR) 30 minutes
(b) RCU MTTR 30 minutes
(c) PCU MTTR 30 minutes
(d) RANK MTTR 30 minutes
(e) CRT MTTR 30 minutes
(f) RFSP MTTR
Mechanical 90 minutes
Electronic 30 minutes

33. INTERFACES. FDIO is a self-contained data communications system between the central computer complex and the peripheral devices in the ARTCC and ATCT's. After installation of the equipment at the control positions, the only interface requirements are local modems to satisfy technical requirements specified in Appendix 1, paragraph 10.2 of FAA-E-2711A and necessary high-speed telephone lines. Modems will be provided by the project office, APS-500, and the telephone lines by the regional project office. Both items are scheduled to be in place by integration testing at the sites.

34.-39. RESERVED.

Figure 3-6. Cathode Ray Tube (CRT) Display

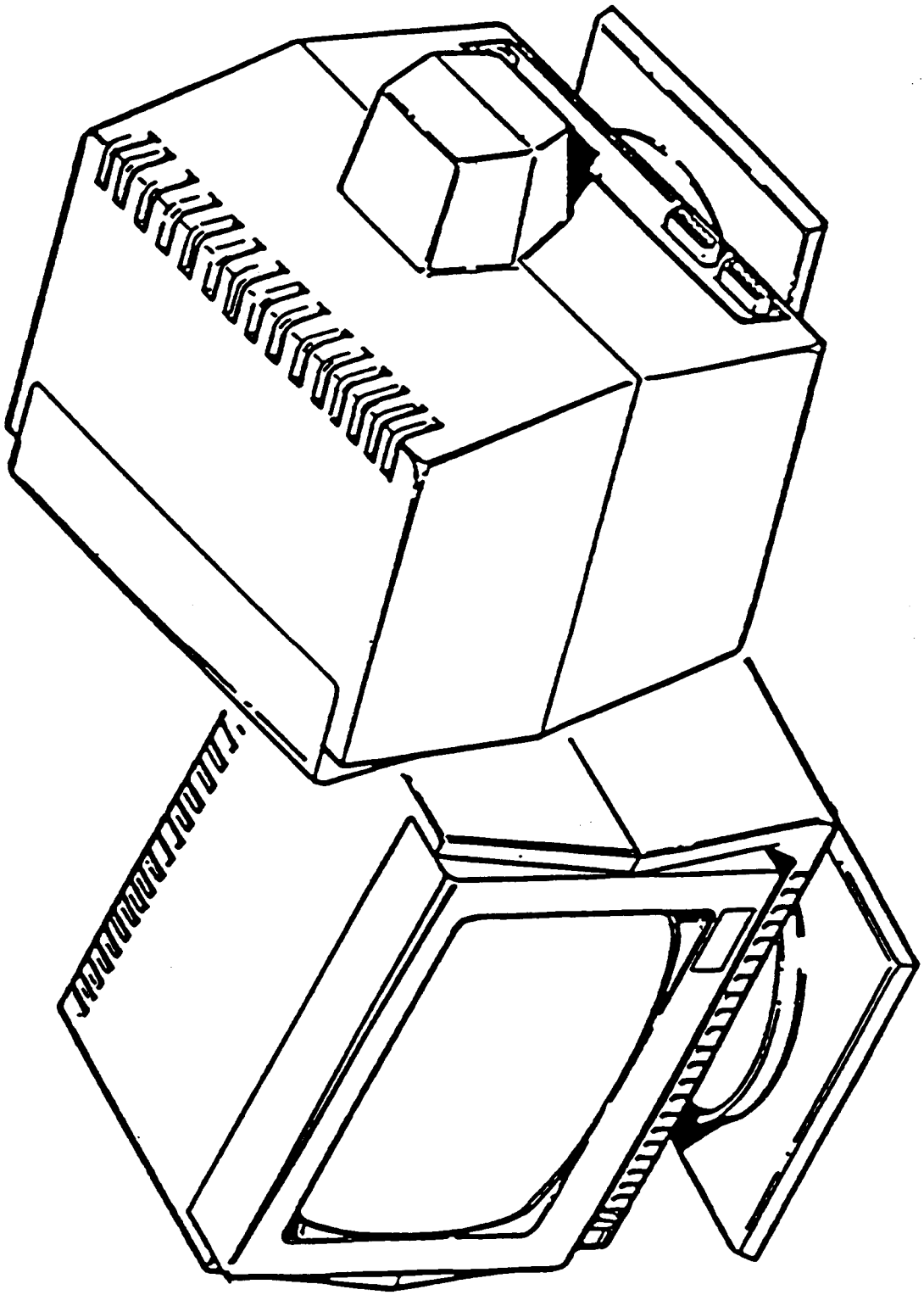

Chapter 4. PROJECT SCHEDULE AND STATUS

40. PROJECT SCHEDULE AND GENERAL STATUS. The FDIO project team has already accomplished the basic requirements of FAA-E-2711A. Development, testing, production and delivery of all FDIO hardware has already taken place and all appropriate contractor and project milestones have been met. Final Installation, Final Integration Testing, Initial Operating Capability (IOC) and Operational Readiness Demonstration (ORD), have yet to be accomplished. Due to the FAA decision to defer operational implementation of FDIO, these final stages of implementation milestones are now planned as FAA responsibility, since the system contract is complete. The FAA plan will include FDIO in the first-up level to the HOST Computer System, Version A4e0.1, rather than 9020 software, as previously planned.

41. MILESTONE SCHEDULE SUMMARY. Figure 4-1, depicts the FDIO milestone chart. Remaining FDIO NAS level milestones do not appear until CY 1988 when HCS Version A4e0.1 software becomes available. Additional interim milestones are provided in Figure 4-1 as a result of this plan.

a. Current schedules for FDIO Operational Readiness Dates are shown in Table 4-2. The schedule of FAA software/firmware development activity in preparation for the FDIO ORD is shown in Figure 4-1.

b. The Host version software (Version A4e0.1) containing FDIO capability will be delivered in March 1988 to Ft. Worth (ZFW) and Seattle (ZSE) ARTCCs. The initial full FDIO implementation will occur at Seattle Center and its associated remote facilities. A test of FDIO capability at Ft. Worth will be part of the A4e0.1 ORD activity at ZFW, but due to the Host ORD activities, will include only limited FDIO tests. The FDIO ORD at ZSE will involve the FDIO in an incremental system build-up of remote site loading. Following successful ORD at Seattle, individual FDIO site ORD activity will be conducted (see Table 4-2).

c. This approach will support near simultaneous ORD of the Ft. Worth Host Computer, ORD of NAS Software Version A4e0.1 and the ORD of the FDIO System. AAP-310 and ATR-200 will assure that official written notification of Seattle and Ft. Worth ARTCCs is made to acknowledge them as test sites.

42. INTERDEPENDENCIES AND SEQUENCE. There are three major interdependencies documented for FDIO as follows:

a. The Host Computer System must be operational.

b. FDIO is dependent on Air Traffic Controlled NAS operational software and compatible firmware for the FDIO ORD to be achieved.

c. FDIO cannot be fully tested or utilized without the appropriate datamux modems and communication lines being in place between ARTCC's and remote sites.

Figure 4-1. Milestone Schedule Summary

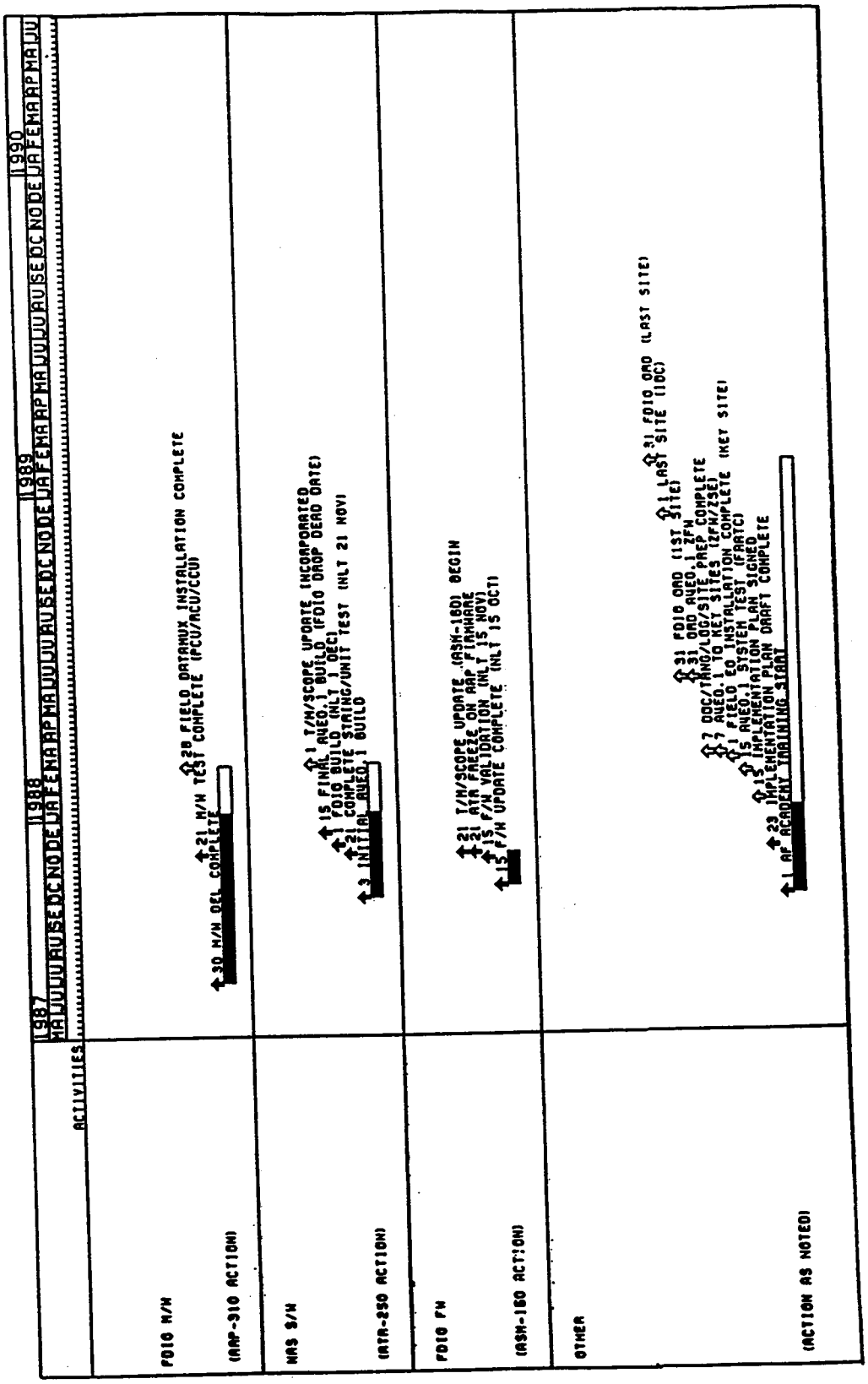

Table 4-1
(Reserved)

Table 4-2. Tentative FDIO Operational Readiness Dates

Central Group Sites
Implementation Schedule

Sequence	Site Name	FDIO (ORD) Date
1	FAA Tech Ctr	N/A
2	FAA Academy	N/A
3	Seattle, WA	5/88
4	Ft. Worth, TX	8/88
5	Denver, CO	8/88
6	Albuquerque, NM	8/88
7	Memphis, TN	9/88
8	Indianapolis, IN	9/88
9	Kansas City, MO	9/88
10	Oakland, CA	9/88
11	Miami, FL (San Juan, P.R.)	10/88
12	Boston, MA	10/88
13	Atlanta, GA	10/88
14	Jacksonville, FL	10/88
15	Minneapolis, MN	11/88
16	Chicago, IL	11/88
17	Cleveland, OH	11/88
18	Washington, DC	12/88
19	Houston, TX	12/88
20	New York, NY	12/88
21	Los Angeles, CA	1/89
22	Salt Lake City, UT	1/89
23	Honolulu, HI	(TBD)
24	Anchorage, AK	(TBD)

Related NAS Plan Projects are Oceanic Display and Planning System (ODAPS), the Offshore Flight Data Processing System (OFDPS), the Host Computer System (HCS), the Advanced Automation System (AAS), and the Data Multiplexing Project. The ODAPS and OFDPS projects share some common equipment with the FDIO project.

43.-49. RESERVED.

CHAPTER 5. PROJECT MANAGEMENT

50. PROJECT MANAGEMENT, GENERAL. The overall technical management of the FDIO program is the responsibility of the Air Traffic Control Automation Division, AAP-300, and is delegated within the division to the En Route Automation Branch, AAP-310. This organization will accomplish the management tasks within the guidelines provided by FAA policies, procedures and directives. The Branch Manager, AAP-310, is designated FDIO Program Manager, and is the focal point for all program activities. A Project Manager is identified in AAP-310 for overall day-to-day management of FDIO.

a. The FDIO project was initially delivered by Wespercorp, Federal Systems Group, as a turn-key system in February 1986, with final delivery of production hardware completed in July 1987. The software was not operationally implemented, and is the focus of this plan as an in-house FAA project.

51. PROJECT CONTACTS.

a. The FDIO Project Management and support personnel are listed below, with a description of their primary function:

Function	Name	Organization
TO	Allen Beard	AAP-310
ATO	Bruce Williamson	AAP-310
ATO	Robert Rinehart	ACT-120
ATR	Joe Kisicki	ATR-200
ATR	Mel Schuette	ATR-120
SEIC	Sim Price	SEI/Project Manager
ACT	Paul Letzter	ACT-570
ATR	Lou Rosgen	ATR-120

(1) A technical officer (TO), designated in AAP-310, has overall FDIO Project Manager responsibility (Reference Paragraph 3911, FAA Order 1100.2B, dated 1 November 1984). The FDIO Project Manager (AAP-310) will manage the project until the system is integrated into the NAS. This will be accomplished by providing planning support, as well as conducting regular coordination meetings with the involved organizations. AAP-310 will prepare and distribute a revised Project Implementation Plan. AAP-310 will provide for test activity and analyses, as required, to complete the integration and implementation of the FDIO System into the field.

The AAP-310 Project Manager will provide technical coordination with AES, ASM, APS, AAC, AST, ATR, ATO, ACT and Regional activities.

(2) Assistant technical officers (ATO), designated by AAP-310, provide assistance as directed by the TO.

(3) The National Automation Engineering Support Sector, ASM-160, is located at the FAA Technical Center, and provides support to the FDIO project. ASM-160 also acts as an assistant technical officer (ATO). This branch will develop necessary changes to the FDIO hardware and firmware to accommodate NAS baseline evolution and changes required to implement the FDIO system as well as follow-on field support. ASM-160 will also support interface testing by providing test analyst support. The FDIO firmware will then be deployed and maintained by ASM-160.

(4) The ATC Systems Branch, ACT-120, was Test Manager during the original ATO FDIO contractor test effort. They will assist in FDIO NAS Integration tests when required, and support the test analysts in analysis and reduction of data, as required. ACT-120 will advise as requested, in the development of the HCS/FDIO interface test procedures.

(5) The Systems Engineering and Integration (SEI) Contractor in support of the FDIO, will:

(a) Support AAP-310 by providing engineering and integration support to assure the integration and implementation of the FDIO within the NAS.

(b) Assist in preparing and coordinating the FAA FDIO test procedures, as requested, from a national level.

(c) Identify a Software Integration Working Group (SIWG) focal point for coordination and integration support. This focal point responsibility involves monitoring and integration support to the overall FDIO project community.

(6) The System Integration Division, ACT-500, will oversee all HCS/FDIO tests, which includes review of test plans and test procedures.

(7) The System Plans and Programs Division, ATR-100, will review the FAA in-house test documentation and tests, and verify that the HCS/FDIO interface software/firmware meets operational requirements. ATR-100 will coordinate with AAP-310, ASM-160 and ATR-250 in the development of software and firmware changes. ATR-100 will act as the Air Traffic focal point to coordinate with the ATO-330 (En Route Procedures Branch) on the FDIO project during installation. ATR-120 will coordinate system-related impacts involving air traffic training, schedules, regional transition and configuration control with AAP-310, as required.

(8) The Automation Software Division, ATR-200, will provide focal point air traffic review and support to the overall FDIO software/firmware development effort. ATR-210 will coordinate with ATR-120, as required. ATR-250 will provide NAS operational software interface support in development of the FDIO firmware and ATR-200 will be the focal point for NAS software following ORD of the software. This support will include test, installation and other coordination and support through the operational commissioning of the FDIO.

(a) The National En Route Field Support Maintenance Branch, ATR-250, is located at the FAA Technical Center, and provides support to the FDIO project. This branch will develop and test the NAS operational software changes required to interface with the FDIO system. ATR-250 will participate in FDIO integration tests, interface tests and FAA in-house coordination on FDIO software/firmware changes. ATR-250 will maintain the NAS FDIO related operational software.

(9) The En Route Procedures Branch of the Procedures Division, ATO-330, will ensure that all operational aspects of the FDIO system implementation are satisfactorily dealt with by the FDIO project community. ATO-330 will coordinate on FDIO project matters with ATR-120.

(10) The Technical Facilities Division, ACT-600, will support the FDIO test phase at the FAA Technical Center. They will:

(a) Prepare laboratory space.
(b) Modify equipment as required to support tests.
(c) Assist in laboratory interfaces.

(11) AAP-310, the En Route Automation Branch, will conduct coordination with and request support from the APS, ASM, AES, and AAC Offices within the FAA, as required.

(b) Each Regional Airway Facilities division has appointed an FDIO program manager, and submitted the name to AAP-310. The regional program manager shall assure that facilities and engineering work is complete at each of the region's sites scheduled to receive the FDIO system prior to the start of the FAAs installation efforts. He will then monitor the installation of the FDIO system within the region, and coordinate requests for contractual support with AAP-310. The regional program manager has arranged for the appointment of a technical representative at each of the region's sites. Regional program manager's will be the main point of contact for all FAA in-house follow-on project work to operationally implement the FDIO system, including Air Traffic regional coordination.

Names of regional FDIO program managers are as follows:

AAL	Dennis Simantel	ZAN-420	FTS (TBD)
ACE	Alex Garcia	ACE-450	FTS (TBD)
AEA	Charles Gruner	AEA-432	FTS (TBD)
AGL	John Porter	AGL-421	FTS 384-7422
ANE	William Tretter	ANE-420	FTS (TBD)

ANM	Cal Collins	ANM-455	FTS 446-2439
ASO	Max Shellnut	ASO-432	FTS (TBD)
ASW	Ron Clark	ASW-420	FTS (TBD)
AWP	Danny Gutierrez	AWP-420	FTS (TBD)

52. PROJECT COORDINATION. The Project Manager, AAP-310, has a continuing need to coordinate on a regular basis with each of his ATO's for engineering, testing, training and administrative guidance; the contracting officer (ALG) for assistance in contractual matters; the ATR requirements point of contact for any Air Traffic related subjects; the regional contact points for relaying information to the field facilities, and the ASM-160 focal point on FDIO Firmware and Hardware matters.

53. PROJECT RESPONSIBILITY MATRIX.

TASK/PLAN/ACTIVITY	PRIMARY OFFICE	SUPPORTING OFFICES
Overall Project Schedule	AAP-310	ATR-200, ASM-160, ACT-100, ATO, Regions
Preliminary Field Implementation Schedule (Project Implementation Plan)	AAP-310	Regions, ATR-250, ASM-160, ACT
Training Program Update Schedules and Assignments	ASM-110	ATR, AAP-310, ATO, AAT, AAC, ASM-160
FAATC Laboratory Test Bed Support	ACT	Regions
Configuration Management (H/W and S/W)	AES-410	APM-160, ATR, ATO, AAP-310, Regions
Software Maintenance (NAS Operational)	ATR-250	AAP-310, Regions, ASM-160, ACT
Software Diagnostics/Firmware Maintenance (FDIO System)	ASM-160	AAP-310, Regions, ATR-250, ACT
Documentation Update	ASM-160 ATR-250	AAP-310, ATR, ATO AES-410
Site Installation Update	AAP-210	Regions, ACT
FDIO System Tests-FAATC (Firmware Changes)	ASM-160	AAP-310, ACT
NAS System Tests-FAATC (FDIO Related Software Changes)	ATR-250	AAP-310, ASM-160 ACT

Integration Test Plan and Procedures	APM-210	AAP-310, ACT, ATR, ASM-160, Regions
Logistic Support Plan	AAC	AAP-310, Regions, ASM-160
FDIO Operational Readiness Demonstration	AAP-310	ASM-160, ATR-250, Regions, ATR, ATO, AAT

54. PROJECT MANAGERIAL COMMUNICATIONS. The project contractor, Wespercorp, has completed delivery of the FDIO equipment, and monthly project meetings have been completed. Contractor services are essentially ended, and the contract close-out is underway. On-going FAA internal communications to support FDIO implementation will occur through normal coordination between FAA organizations, meetings of the FAA in-house project coordination group, FAA Software Integration Working Group support, and other activity described in this plan.

a. The AAP-310 Program Manager is responsible for conducting an FDIO Project Coordination Meeting at least monthly. This meeting will include representatives from ATR, ATO, ACT and the SEI. Action Items will be assigned as jointly agreed to, and will form a basis for coordinated support to the project. Other FAA offices may be tasked, based on coordination and approval, as appropriate. The SEI may be tasked, subject to SEI contract provisions.

55. IMPLEMENTATION STAFFING. The staffing for the FDIO system implementation activity will be provided by each FAA activity as required to support the project. The activities described in Section 51, Project Contacts, are involved in staffing support. A fully coordinated staffing support agreement will be established for each site implementation activity.

56. PLANNING AND REPORTS. All FAA activities will include this FDIO implementation activity as normal reporting item. No contractor reports are supplied, since the FDIO is now an FAA in-house project.

57. APPLICABLE DOCUMENTS.

a. DOCUMENTATION. The following is a list of applicable project-related documents.

NAS-MD-309	Operational Computer Program Description
NAS-MD-311,	Message Entry and Checking.
NAS-MD-314,	Local Outputs
NAS-MD-315,	Remote Outputs.
NAS-MD-316,	Adaptation
NAS-MD-317,	Monitor
NAS-MD-326,	NAS Adaption Collection Guidelines
6100.1A,	Maintenance of NAS En Route Stage A - Air Traffic Control System.

6130.6	System Design Data
NAS-MD-581	System Interface Control Document
6130.6	Hardware Design Data
NAS-MD-580	Computer Program Functional Specification
NAS-MD-110	ADL Test Terms and Definitions
1810.4	ADL Test and Evaluation Program
FAA-STD-024A	Preparation of Test and Evaluation Plans and Test Procedures

b. RELATED DOCUMENTS. The following documents are being used as guidance and reference in the implementation of the FDIO system:

FAA ORDERS.

1100.1A,	FAA Organization - Policies and Standards.
1100.134A,	Maintenance of National Airspace System Automation Subsystem.
1380.40B,	Airway Facilities Sector Level Staffing Standards System.
1800.8E,	National Airspace System Configuration Management.
4250.9A,	Field Inventory Management and Replenishment Handbook.
4560.1A,	Initial Provisioning for Support of Facilities, Facility Components, Aircraft and Avionic Equipment.
4620.3C,	Initial Support for New or Modified Equipment Installation.
4650.2	Facility Equipment Records
6000.18	Field Repair of Equipment.
6020.2A	Joint Acceptance Inspection for FAA Facilities.
6200.4C,	Test Equipment Management Handbook.
4800.2A	(TBD)

(b) FAA Specifications.

FAA-E-1210,	Provisioning Technical Documentation
FAA-E-1375	Spare Parts-Peculiar for Electronic, Electronical and Mechanical Equipments
FAA-E-2552	Technical Training
FAA-E-2711A,	Flight Data Input/Output System

(c) Other Publications.

Host Documentation (TBD)

58.-59. RESERVED.

CHAPTER 6. PROJECT FUNDING

60. PROJECT FUNDING STATUS, GENERAL. Funding for FDIO support is the responsibility of ASM-160 for hardware/firmware field support. ATR-250 would fund for follow-on modification to the Host software to accommodate FDIO changes. The National Change Proposal (NCP) process would apply to this follow-on funding.

61.-69. RESERVED.

CHAPTER 7. DEPLOYMENT

70. GENERAL DEPLOYMENT ASPECTS. This project replaces existing Flight Data Entry and Printout (FDEP) and Flight Strip Printer (FSP) systems with modern, faster and quieter input/output equipment.

a. Since FDIO was administratively delayed from its pre-Host schedule to the first software update to the Host system, a number of significant events took place which complicates implementation of the system. Each of these events demands recognition and discussion in this plan. The following scenario briefly describes the plan as it is currently envisioned.

b. FDIO was contracted for by a turnkey contract described earlier in this plan. This contract has seen the development of a hardware system which has been factory tested using a NAS simulator, FAATC tested using an outdated version of NAS software and finally site tested using test tools. This hardware and its associated firmware has been delivered to all FAA field facilities (except Hawaii) and stored at DOD warehouses. The system has been fully accepted by the FAA and the equipment awaits only the ATC operational software for implementation. This is currently scheduled for late May 1988.

c. In the interim between this date and its previous implementation date (mid-1987) the FAA concluded its contract with the turnkey contractor.

d. As a result the following changes in the FDIO project became necessary considering the urgent need to replace the deteriorating IBM 1980 Flight Strip Printers (FSP) in the field.

e. The system as delivered, could not be used operationally, and many sites decided to place the FDIO equipment in storage.

f. Several field generated suggestions have resulted in the now operational Replacement Flight Strip Printer Converter Unit (RFSPCU) "(Black Box)", allowing use of the new RFSP's.

g. The printers in towers and terminal radar approach control facilities (TRACONs) were old and difficult to maintain, which resulted in the development of an interim terminal system (Blue Box) for these sites. This system will be optionally implemented at those FDEP sites desiring to changeover, well before FDIO is scheduled for implementation. (Note: Four (4) month changeover time frame is a suggested target time frame.)

h. The FDEP equipment is used in selected towers to allow flight data, etc., to be entered into NAS via keyboards, and to allow output flight data to be printed on flight strips.

i. Approximately 60 days prior to the availability of updated Host software the two key site ARTCC's (Seattle and Ft. Worth) will be contacted (or visited) by AAP-310 representatives along with Regional FDIO coordinators for a brief site readiness review and assist, in providing guidance and help to identify any discrepancies in site readiness. This activity will be continued at other ARTCC's.

j. The Regional AF individual (identified as the Regional focal points) will be responsible to the FDIO Project Manager for all on-site coordination. Each site will identify responsible managerial and technical focal points to be responsible for coordination on all on-site support. This will assure all union contract requirements are reflected in individual site plans. During the installation, integration and test activity, any regional site unable to adequately support the FDIO project activity will be excluded from the initial installation activity, and the region will then be responsible for implementation on an individual basis at a later date.

k. All Regional and site focal point individuals will receive individual distribution of implementation documentation, with return receipts required to allow accountability. A central site location at ASM-160 (library function) will be provided for documentation.

71. SITE PREPARATION. The FDIO equipment originally procured from Wespercorp has been installed in some facilities, and stored in others awaiting operational use.

a. This section provides a site specific update to reflect the ARTCC site preparation requirements for each site.

b. A Site Readiness Review (SRR) Team may conduct a visit to each ARTCC to assisting the sites with the individual site preparation requirements for each site. The following schedule will be followed in the event the visit is required:

Central Site	Survey Visit Date	Site Contact & Phone
(TBD)	(TBD)	(TBD)

72. DELIVERY. The FDIO equipment originally procured from Wespercorp has been delivered and accepted by the FAA.

a. This section provides a site-specific update for each ARTCC to reflect changes to the original system configuration.

b. Individual remote site-visits by Project Office representatives will be determined on a case-by-case basis, and pre-coordinated as needed.

c. Due to software/firmware constraints, at FDIO implementation, we will no longer have two systems (old and new) at the field sites for purposes of shadowing or comparison of data. Only the interim systems will exist at most sites, making several physical cable and firmware changes necessary during testing and cutover.

d. For the first time it becomes necessary to ORD a new software version and a new hardware system at the same time. We have already envisioned some problems with this requirement, due to manpower, computer time and milestone dates.

e. Additionally, site preparation, manpower, documentation, training, telephone lines, modems and PAM adapters must be ready at the proper time. Much of this activity will fall upon the regional staffs for resolution.

f. Due to the time and manpower associated with a physical cable changeover (from Black Box to PCU) and the fact that NAS adaptation accommodates only FDIO or "Black Box" in the ARTCCs, "AB" switches will be furnished to allow the switching from PCU to "Black Box" and back during testing periods, at the first three sites. These switches will be delivered prior to software delivery and will require regional installation and production of sufficient cables to accommodate the PCU to switch link. At the time these sites commission the PCU, the switches will be removed and shipped to the next scheduled site (see implementation schedule).

g. Since the system will have been fully integrated and tested against the A4e0.1 software and a "ten" terminal configuration at FAATC, using Air Traffic test methods, special regionally developed tests at the sites will only be required to assure that the site hardware configuration and Host software work properly together and can handle all remote sites. Normal field baseline tests (500/600) may be used for this purpose.

73. INSTALLATION PLAN. The FDIO equipment originally procured from Wespercorp has been installed in some facilities, and stored in others, awaiting operational use.

a. The SRR Team may conduct a visit to each ARTCC site to assist in defining the individual installation requirements for each site.

74. REGIONAL CONFIGURATION ALTERNATIVES

The FDIO system at the remote sites can accommodate 10 printers, 5 keyboards and 5 CRT's. The current software for A4e0.1 will, however, allow only a 3-printer, 2-keyboard and CRT configuration. The A4e0.1 software or EnRoute Operational Specification does not recognize the existence of a CRT. The software will be changed in a future system, but for first implementation this limitation will prevail. If any remote facility has operational need for a greater configuration than 3-2-2; the following options are available:

1. Acquire and install additional RCU(s) from regional resources.
2. Continue use of the FDEP system along with FDIO system.
3. Procure from regional resources a "PC" system (software nationally available to supplement FDIO).
4. Multiple addresses the same RCU assigning different FDEP Facilities (3X2) to each address.

75.-79. RESERVED.

CHAPTER 8. VERIFICATION

80. FACTORY VERIFICATION. Factory verification of FDIO occurred when the system was originally procured from Wespercorp. Factory acceptance testing, ACT-100 Integration tests and APM-160 Shakedown tests of the FDIO Hardware, Software and Firmware were completed by February of 1986. Verification of the Host/FDIO system precedes current field verification, and will be conducted at the FAA Technical Center.

a. The emphasis during FAA Technical Center Verification of the FDIO System will be on software and firmware verification of the FAA updates and changes incorporated since original acceptance of the system. Hardware previously verified and accepted will not be re-verified unless related hardware changes require re-verification.

81. CHECKOUT. The FDIO test bed at the FAA Technical Center will be used to accomplish system checkout. This contains a remote site configuration of 10 remotes.

a. The emphasis during checkout will be to assure that the FDIO equipment in the test bed performs satisfactorily to support system testing.

82.-83. RESERVED

84. FAA INTEGRATION TESTING AT THE FAA TECHNICAL CENTER. The AAP-310 Project Manager is responsible for overall FDIO Project Integration Test management at the FAA Technical Center. Plans and procedures for the integration tests will be developed and tests conducted to verify overall Host/FDIO operability.

a. An FDIO Project Test Manager will be designated by the FDIO Project Manager. The test manager will assemble a test team to coordinate all integration test activity. In addition, this team will develop FAA Test Plans and Procedures for integration testing. The FAA Program Manager (AAP-310) will designate the offices recommended to be on the test team.

85. TEST AND EVALUATION.

a. General Test Approach

(1) General test areas are identified below to allow each region to develop site-unique procedures.

(a) PAM Adapter

Before testing the hardware interface, regional technicians will assure the test procedures provide procedures to verify all cable wiring and continuity as well as GPI/GPO adapter data and control lines for proper operation at all sites.

(b) HCS/FDIO Interface and Hardware Testing

Hardware Interface testing is the initial phase of software testing. Tests will be performed to verify an operational interface between the FDIO equipment and the NAS HCS system and to verify proper operation of peripheral equipment at all sites.

(c) En Route Testing (ARTCCs and Remote Sites)

The NAS Operational software shall be adapted to the facility and run against a Baseline Test. Tests must be run using the maximum hardware configuration possible at each installation. Tests must be conducted to ensure that site data has been correctly converted and installed into the HOST Operational Software. Functional tests shall verify the correct functioning of the HCS and FDIO subsystem with the site adapted configuration and insure the correct operation of all system communication paths (e.g., interfacility interfaces). As a minimum, these Baseline tests must verify the following:

1. That the NAS system operates properly in the ARTCC environment.
2. That the FDIO system operates properly under a system load.
3. That FDIO modifications to NAS have not degraded the system.
4. That site adaptation data has been correctly converted and installed into the HCS A4e0.1

(d) Remote Site Testing (FAATC)

All remote sites will transmit and receive messages. A system load environment must be simulated and tests will be run using the maximum configuration possible at the site. As a minimum, these tests must verify the following:

1. That each adapted remote site is capable of sending and receiving messages from the HCS.

2. That the FDIO system operates properly in a system load environment.

3. Proper rerouting from one remote site to another is effected.

(2) ARTCC Testing

a. The A4e0.1 software has been developed to accommodate either the "Black Box" Printer system or the FDIO system but not both at the same time. Adaptation will control which system will prevail. A build with one adaptation package will produce an FDIO system and one with another adaption package will produce a system utilizing the "Black Box" system. This is only true at the ARTCC's and does not affect the remote facilities which will be brought up one at a time, at the option of the system engineer keyboard entries.

b. During site testing of the new system, normal facility "bring-up" procedures (normally on mid-shift) will initially be used to validate the system delivered by ATR-250, including early changeover to full FDIO instead of the "Black Box" in the ARTCC. After reasonable assurance that the tape performs as advertised, the previously installed "AB" switches may be removed and shipped to the next ARTCC and ORD pursued using the FDIO (PCU) system. Remote sites should be brought up one at a time after the ARTCC is on full PCU operation, since the remote site will require firmware charge-out and individual testing.

When the facility has determined that FDIO works properly and Version A4e0.1 works to the satisfaction of the facility, ORD may be declared and any obsolete equipment disposed of in accordance with paragraph 96, and the "AB" switches removed and shipped to next site.

In the event of firmware or hardware problems implementing FDIO, contact ASM-160 at FAATC for assistance. If NAS software problems occur, contact ATR-250 for Field Support assistance.

86. JOINT ACCEPTANCE INSPECTION (JAI). A partial Joint Acceptance Inspection (JAI) was conducted on the originally delivered FDIO system. The documented exceptions to that JAI activity will be resolved during the current implementation activity. The provisions of FAA Order 6100.1A will be met prior to placing the system on-line.

87.-89. RESERVED.

CHAPTER 9. INTEGRATED LOGISTICS SUPPORT

90. GENERAL. The logistics program for the FDIO is based upon the requirement to support systems deployed at all operational sites, the academy and the Technical Center. At the time this implementation plan was officially distributed, FDIO equipment had been delivered by the development contractor to the ARTCCs, ATCTs, military locations, the Academy and Depot and FAA Technical Center. Due to delays in implementation and fielding of the Host Computer System (which is the primary interface for FDIO), the majority of FDIO system hardware is in a storage mode and not operationally active.

The program conforms to FDIO Specification FAA-E-2711A and FDIO contract DTFA01-84-C-00002.

a. In order to ensure that the most appropriate and effective logistics procedures will be instituted for the FDIO program, a National Airspace Integrated Logistics Management Team (NAILSMT) will be established for logistics management and planning purposes. The NAILSMT will be responsible for ensuring that the current logistics program be evaluated and maintained. The NAILSMT will meet formally on a periodic basis. The team will be capable of spinning off sub-groups tailored to address a specific problem or undertake a specific task. The chairman of the NAILSMT will be accountable to the Project Manager, and will be responsible for the following tasks:

(1) Negotiation support to the project office concerning contractor or vendor negotiation efforts.
(2) Review and interpretation of support data.
(3) Integration of FDIO logistics efforts with the NAS program.
(4) Initiation and maintenance of effective supply support procedures.
(5) Monitoring of an effective provisioning program.
(6) Oversight of the current FAA in-house FDIO upgrade effort and support for an effective training program.
(7) Development of an effective maintenance program and active oversight of the continuing maintenance effort.

b. Implementation of the FDIO system requires property management and accountability for all assets acquired in the program. Logistics support, including provisioning of spare parts and supply support, (both initially and on a continuing basis), must be provided. The following regulations have been used within this procurement for the definition of logistics efforts:

(1)	FAA-E-2711A	Flight Data Input/Output (FDIO) System dated September 26, 1983
(2)	FAA-G-1375B	Spare Parts Peculiar for Electronic, Electrical and Mechanical Equipments, August 14, 1981 Provisioning Technical Documentation, August 14, 1981

(3)	FAA-G-1210d	(TBD)
(4)	FAA-G-2100c	Electronic, Electrical and Mechanical Equipment, June 22, 1981
(5)	FAA-E-2552A	Technical Training, September 11, 1980 - Appendix II deleted
(6)	FAA-D-2994/1a	Technical Instruction Book Manuscripts: Electronic Equipment, Requirements for Preparation of Manuscript, July 18. 1975
(7)	FAA-D-2494/16	Technical Instruction Book Manuscripts: Electronic, Electrical and Mechanical Equipment, Requirements, October 2, 1975
(8)	FAA-STD-016	Quality Control System Requirements, August 27, 1975
(9)	FAA-STD-021	Configuration Management, August 7, 1981
(10)	MIL-STD-129H	Marking for shipment and storage
(11)	MIL-STD-470	Maintainability Program Requirements, (For Systems and Equipments)
(12)	MIL-STD-471A	Maintainability Demonstration
(13)	MIL-STD-721C	Definition of Effectiveness Terms for Reliability, Maintainability, Human Factors and Safety
(14)	MIL-STD-785B	Reliability Program for Systems and Equipment Development and Production
(15)	MIL-STD-804B	Format and Coding of Tabulating and Aperture Cards for EDMS
(16)	MIL-STD-881A	Work Breakdown Structure (WBS)
(17)	MIL-E-17555G	Preservation, Packaging and Packing
(18)	DOD-D-1000B	Drawing, Engineering and Associated Lists
(19)	MIL-HDBK-2170	Reliability Prediction of Electronic Equipment
(20)	MIL-HDBK-472	Maintainability Prediction

91. MAINTENANCE CONCEPT. The initial maintenance concept delineated within the system specification FAA-E-2711A called for two maintenance support levels for system hardware. They are:

a. On-Site/Remote Facility. On-site maintenance at the ARTCC or TRACON or ATCT operational area will be performed by personnel using equipment available at each work center. Equipment maintenance shall be facilitated by fault isolation to the LRU (i.e., module, P.C. board, and chassis mounted electrical or mechanical part), using built-in fault isolation capability such as diagnostics and indicators which preclude the need for special test equipment. Restoration shall be performed by removal and replacement of failed assemblies, PCB's, or modules.

b. Depot Level Maintenance. The depot accomplishes tasks beyond the capabilities of the On Site/Remote Facility level of maintenance. Failed FDIO assemblies, PCB's, or modules that are not repairable on-site will be repaired or overhauled at the depot.

c. All systems hardware acquired by the FDIO contract has been delivered. Some sites have optioned to complete equipment installation after the fielding of the Host Computer System (HCS). Portions of the delivered hardware will remain in storage until that time.

d. All ARTCCs have replaced their IBM Flight Strip Printers (FSP) and Flight Strip Printer Control Modules (FSPCM) with the FDIO RFSPs and Replacement Flight Strip Printer Control Units (RFSPCU). Site maintenance for this interim system consists of whole unit replacement of the RFSPs and RFSPCUs for site spares. The failed item is forwarded to established depot repair facilities.

e. In the case of interim system implementation for terminal facilities, remote facilities will complete installation of the FDIO hardware and adhere to the maintenance philosophies addressed in items a. and b. above.

92. TRAINING. As of this point in the acquisition, contractor ARTCC AF training on the FDIO system has been completed. ATCT personnel training on the FDIO system resumed in October 1987. The schedule of classes can be found in the System Training Plan.

93. SUPPORT TOOLS AND TEST EQUIPMENT. All tools and support and test equipment required for the installation, test and maintenance/calibration of the FDIO system have been identified. Two listings (a test equipment list and a tools list) were developed under FAA-G-1210d guidelines and delivered under the cover of the System Maintenance Plan required by modification #4 to the basic contract. No special tools are required to support the installation. Standard tools are required, and have been previously identified to the regions in previous documents.

94. SUPPLY SUPPORT. The provisioning requirements for spare parts were determined through contractor-developed provisioning technical documentation, directed and jointly executed by the program office and the FAA depot. Spares have been provided to work centers in accordance with existing FAA policies. The program office has provided initial depot spares at levels established by the depot. Efforts are underway to provide for additional depot spares.

95. DOCUMENTATION. Various documents have been produced by the contractor in response to contract deliverable requirements. Those documents which are applicable to the logistics aspects of this acquisition will be addressed within Integrated Logistics Support Plan (ILSP) for the project.

96. EQUIPMENT REMOVAL. The new FDIO system has, at this point, replaced in total the FDEP and FSP systems used to this date. All equipment which has been displaced by the new system will be disposed of in accordance with FAA Order 4800.2A, Utilization and Disposal of Excess Surplus Personal Property. If there are any problems with disposal actions they should be referred to the program office.

97. FACILITIES. The majority of site installation efforts have been accomplished. Final efforts will center on the installation of modems and high-speed telephone lines for transmittal of data between the central computer complex and the ARTCCs and ATCTs. FAA Order 4660.1, "Real Property Handbook", will be consulted for appropriate installation procedures.

98.-99. RESERVED.

CHAPTER 10. ADDITIONAL PROJECT IMPLEMENTATION ASPECTS

100. "BLACK BOX" IMPLEMENTATION.

(TBD)

101. "BLUE BOX" IMPLEMENTATION.

(TBD)

102. DOD FDIO IMPLEMENTATION.

(TBD)

103.-109. RESERVED.

Note: The additional Project implementation aspects for "Black Box," "Blue Box," and DOD aspects are being determined and will be included in a future revision.

☆U.S. Government Printing Office : 1988 - 516-018/80272