ORDER

6360.6

Reprinted 5/4/83

INTERFACE INSTRUCTIONS FOR ATCBI-4 RADAR BEACON INTERROGATOR
IN ASSOCIATED OPERATION WITH FAA EQUIPMENT

1/3/74

DEPARTMENT OF TRANSPORTATION
FEDERAL AVIATION ADMINISTRATION

Distribution: R-1; RAF-400 (special distribution); AAF-330 (68 copies); AAC-480 (400 copies)

Initiated By: AAF-330

RECORD OF CHANGES

DIRECTIVE NO. 6360.6

CHANGE TO BASIC	SUPPLEMENTS			OPTIONAL USE	CHANGE TO BASIC	SUPPLEMENTS			OPTIONAL USE

ORDER

DEPARTMENT OF TRANSPORTATION
FEDERAL AVIATION ADMINISTRATION

6360.6

1/3/74

SUBJ: INTERFACE INSTRUCTIONS FOR ATCBI-4 RADAR BEACON INTERROGATOR IN ASSOCIATED OPERATION WITH FAA EQUIPMENT

1. PURPOSE. This Order transmits and places into effect the subject handbook which sets standards for the interfacing of associated FAA equipment with the Radar Beacon Interrogator, Type ATCBI-4 at new and upgraded terminal installations.

2. DISTRIBUTION. This Order is distributed to the Secondary Radar Branch of the Airway Facilities Service at Washington headquarters; to all Regional Directors and Regional Engineering Divisions; and to the FAA Depot.

3. DISCUSSION. The use of this handbook assumes all system connections are standard. If any deviation from the standard configuration exists, local drawings must be consulted for correct connections; of course, any deviation must be approved separately for each site.

Warren C. Sharp
for J. W. COCHRAN
Director, Airway Facilities Service, AAF-1

Distribution: R-1; RAF-400 (special distribution); AAF-330 (68 copies);AAC-480 (400 copies)

Initiated By: AAF-330

TABLE OF CONTENTS

CHAPTER 1. INTRODUCTION 1

1. PURPOSE 1
2. SCOPE 1
3. REFERENCES 1
4. ASSOCIATED EQUIPMENT 1
5. MODIFICATION POLICY 1
6. DEVIATIONS FROM STANDARD 1
7. GROUNDING 2
8. VIDEO TERMINATION 2
9. HANDBOOK CONTENT 2
10. CHANGES 2
11.-13. RESERVED 2

CHAPTER 2. MANAGEMENT SUMMARY 3

SECTION 1. ATCBI-4 SYSTEM OPERATION 3

14. GENERAL 3
15. TRANSMITTER SITE EQUIPMENT 3
16. INDICATOR SITE EQUIPMENT 3
17. TRANSMITTER FUNCTION 3

a. Sidelobe Suppression 7
b. Improved Sidelobe Suppression 7

18. PRIMARY RADAR ASSOCIATION 7
19. AIRCRAFT TRANSPONDER 7
20. RECEIVER FUNCTION 8
21. INTERSITE CONNECTIONS 8
22. REMOTE CONTROL 9
23. DECODER DISPLAY 9
24.-27. RESERVED 9

SECTION 2. GUIDE TO HANDBOOK USAGE 10

28. LANDLINE 10

a. Transmitter Site 10
b. Indicator Site 10

29. RADAR MICROWAVE LINK 12

a. RML/RCJB Standard Interface 12
b. Transmitter Site 12
c. Indicator Site 13

30.-32. RESERVED 13

TABLE OF CONTENTS (Cont.)

CHAPTER 3. LANDLINE INSTALLATIONS 19

SECTION 1. TRANSMITTER SITE 19

33. COMMON CONNECTIONS 19
34. DEFRUITER CONNECTIONS 34
35. PRIMARY RADAR CONNECTIONS 44
36.-39. RESERVED 44

SECTION 2. INDICATOR SITE 48

40. ATCBI-4 REMOTE CONTROL BOX 48
41. ATCBI-2 INDICATOR SITE EQUIPMENT 54
42. ATCBI-3 INDICATOR SITE EQUIPMENT 56
43. AN/TPX-42A INDICATOR SITE EQUIPMENT 58
44. AUTOMATED RADAR TERMINAL SYSTEM (ARTS III) 60
45.-48. RESERVED 60

CHAPTER 4. RADAR MICROWAVE LINK INSTALLATIONS 65

SECTION 1. RML/RCJB STANDARD INTERFACE 65

49. STANDARDIZATION 65

a. Transmitter Site 65
b. Indicator Site (RML-2,3 and 4) 65
c. Indicator Site (RML-6) 66
50.-52. RESERVED 66

SECTION 2. TRANSMITTER SITE 87

53. COMMON CONNECTIONS 87
54. DEFRUITER CONNECTIONS 103
55. PRIMARY RADAR CONNECTIONS 111
56.-59. RESERVED 111

SECTION 3. INDICATOR SITE 115

60. ATCBI-4 REMOTE CONTROL BOX 115
61. MODIFICATION DETAILS 115
62. ATCBI-2 INDICATOR SITE EQUIPMENT 117

a. RML-2,3 and 4 117
b. RML-6 117

63. ATCBI-3 INDICATOR SITE EQUIPMENT 120

a. RML-2,3 and 4 120
b. RML-6 120

TABLE OF CONTENTS (Cont.)

64. AN/TPX-42 INDICATOR SITE EQUIPMENT 123

a. RML-2,3 and 4 123
b. RML-6 123

65. AUTOMATED RADAR TERMINAL SYSTEMS (ARTS III) 127

a. RML-2,3 and4 127
b. RML-6 127

LIST OF FIGURES

FIGURE 2-1	BEACON SYSTEM BLOCK DIAGRAM	5
FIGURE 3-1	ATCBI-4 TRANSMITTER SITE CONNECTIONS - LANDLINE REMOTING	21
FIGURE 3-2	RADAR CABLE JUNCTION BOX INTERFACE AT THE TRANSMITTER SITE (LANDLINE REMOTING)	45
FIGURE 3-3	RADAR CABLE JUNCTION BOX INTERFACE AT THE INDICATOR SITE (LANDLINE REMOTING)	49
FIGURE 3-4	READBACK ISOLATION - DIODE MODIFICATION	51
FIGURE 3-5	RADAR CABLE JUNCTION BOX INTERFACE AT THE INDICATOR SITE (LANDLINE REMOTING - ARTS III)	61
FIGURE 4-1	RADAR CABLE JUNCTION BOX INTERFACES AT THE TRANSMITTER SITE (RML REMOTING)	67
FIGURE 4-2a	RADAR CABLE JUNCTION BOX INTERFACES AT THE INDICATOR SITE (RML REMOTING - EXCLUDING ARTS III)	69
FIGURE 4-2b	RADAR CABLE JUNCTION BOX INTERFACES AT THE INDICATOR SITE (RML REMOTING - ARTS III)	71
FIGURE 4-3a	RADAR CABLE JUNCTION BOX INTERFACES AT THE INDICATOR SITE (RML-6 REMOTING - EXCLUDING ARTS III)	73
FIGURE 4-3b	RADAR CABLE JUNCTION BOX INTERFACES AT THE INDICATOR SITE (RML-6 REMOTING - ARTS III)	75
FIGURE 4-4	READBACK ISOLATION - DIODE MODIFICATION	77
FIGURE 4-5	ATCBI-4 TRANSMITTER SITE CONNECTIONS - RML REMOTING	89

LIST OF TABLES

TABLE 2-1:	LANDLINE INSTALLATION SOURCE SUMMARY	11
TABLE 2-2:	RML-2 INSTALLATION SOURCE SUMMARY	14
TABLE 2-3:	RML-3 INSTALLATION SOURCE SUMMARY	15
TABLE 2-4:	RML-4 INSTALLATION SOURCE SUMMARY	16
TABLE 2-5:	RML-6 INSTALLATION SOURCE SUMMARY	17
TABLE 3-1:	ATCBI-4 COMMON CONNECTIONS	23-33
TABLE 3-2:	FA-7281 DEFRUITER CONNECTIONS	35-37
TABLE 3-3:	FA-8100 DEFRUITER CONNECTIONS	38-40
TABLE 3-4:	MX8757/UPX DEFRUITER CONNECTIONS	41-43
TABLE 3-5:	PRIMARY RADAR CONNECTIONS	47
TABLE 3-6:	ATCBI-4 REMOTE CONTROL BOX CONNECTION	53
TABLE 3-7:	ASR-4,5,6,7/ATCBI-2 CONNECTIONS	55
TABLE 3-8:	ASR-4,5,6,7/ATCBI-3 CONNECTIONS	57
TABLE 3-9:	ASR-4,5,6,7/AN/TPX-42A CONNECTIONS	59
TABLE 3-10:	ASR-4,5,6,7/ARTS III CONNECTIONS	63
TABLE 4-1:	ASR-4,5,6,7/RML-2 CONNECTIONS	79
TABLE 4-2:	ASR-4,5,6,7/RML-3 CONNECTIONS	80
TABLE 4-3:	ASR-4,5,6,7/RML-4 CONNECTIONS	81
TABLE 4-4:	ASR-4,5,6,7/RML-6 CONNECTIONS	82
TABLE 4-5:	RML-2/ASR-4,5,6,7 CONNECTIONS	83
TABLE 4-6:	RML-3/ASR-4,5,6,7 CONNECTIONS	84
TABLE 4-7:	RML-4/ASR-4,5,6,7 CONNECTIONS	85
TABLE 4-8:	RML-6/ASR-4,5,6,7 CONNECTIONS	86
TABLE 4-9:	ATCBI-4 COMMON CONNECTIONS	91-102

LIST OF TABLES (Cont.)

TABLE 4-10:	FA-7281 DEFRUITER CONNECTIONS	104-105
TABLE 4-11:	FA-8100 DEFRUITER CONNECTIONS	106-107
TABLE 4-12:	MX8757/UPX DEFRUITER CONNECTIONS	108-110
TABLE 4-13:	PRIMARY RADAR CONNECTIONS	112-113
TABLE 4-14:	ATCBI-4 REMOTE CONTROL BOX CONNECTION	116
TABLE 4-15:	ASR-4,5,6,7/ATCBI-2 INDICATOR SITE EQUIPMENT CONNECTIONS (RML-2,3,4 REMOTING)	118
TABLE 4-16:	ASR-4,5,6,7/ATCBI-2 INDICATOR SITE EQUIPMENT CONNECTIONS (RML-6 REMOTING)	119
TABLE 4-17:	ASR-4,5,6,7/ATCBI-3 INDICATOR SITE EQUIPMENT CONNECTIONS (RML-2,3,4 REMOTING)	121
TABLE 4-18:	ASR-4,5,6,7/ATCBI-3 INDICATOR SITE EQUIPMENT CONNECTIONS (RML-6 REMOTING)	122
TABLE 4-19:	ASR-4,5,6,7/AN/TPX-42A CONNECTIONS (RML-2,3,4 REMOTING)	124
TABLE 4-20:	ASR-4,5,6,7/AN/TPX-42A CONNECTIONS (RML-6 REMOTING)	125-126
TABLE 4-21:	ASR-4,5,6,7/ARTS III CONNECTIONS (RML-2,3,4 REMOTING)	128
TABLE 4-22:	ASR-4,5,6,7/ARTS III CONNECTIONS (RML-6 REMOTING)	129

CHAPTER 1. INTRODUCTION

1. PURPOSE. This handbook contains information required to standardize the interface between the ATCBI-4 Beacon Interrogator and associated FAA equipment, including the primary radar (ASR), the radar microwave link (RML), and the indicator site equipment.

2. SCOPE. The interface data presented here applies to Terminal installations. All installations are assumed to require a defruiter. This handbook is intended to be applicable to both new installations and when upgrading operational sites. Both landline and RML remoting of the ASR and beacon interrogator are considered.

3. REFERENCES. The information contained in this handbook was obtained from FAA technical manuals for the ATCBI-4 and associated FAA equipment, installation handbooks and drawings, and contact with experienced FAA personnel.

4. ASSOCIATED EQUIPMENT. The associated equipment consists of:

   Airport Surveillance Radar ASR-4
   Airport Surveillance Radar ASR-5
   Airport Surveillance Radar ASR-6
   Airport Surveillance Radar ASR-7
   Storage Tube Defruiter FA-7281
   Storage Tube Defruiter FA-8100
   Digital Defruiter MX-8757/UPX
   Radar Microwave Link RML-2
   Radar Microwave Link RML-3
   Radar Microwave Link RML-4
   Radar Microwave Link RML-6
   Decoder/Display ATCBI-2
   Decoder/Display ATCBI-3
   Decoder/Display AN/TPX-42A
   Decoder/Display ARTS III

5. MODIFICATION POLICY. The only modification required in all ATCBI-4 installations covered by this handbook is that necessary to make available a zero range trigger from the ASR-4 through 7. An approved modification was not available at the time this manual was being prepared. The nearest FAA regional office should be contacted regarding the availability of official modification information and the 'Radar Facilities and Equipment Modification Handbook - Radar Beacons' AF P 6360.1 should be consulted.

6. DEVIATIONS FROM STANDARD. Variances to FAA standard interconnections occur at various sites in spite of FAA efforts to achieve standardization. Each variance must be approved separately for

each site. Use of this handbook assumes that all system interconnections are standard. If this is not the case, then local drawings must be consulted to determine the correct connection information.

7. GROUNDING. The ATCBI-4 racks are to be tied together with number six copper wire and this tied to the station ground. Care must be taken to avoid ground loops which might induce AC hum on signal lines. All signal grounds, cabinet grounds and AC neutral should be tied to the station ground (earth) at a single point. Adequate grounding can be especially difficult to achieve when opposite ends of a landline installation are powered by separate AC systems. Each case must be considered separately.

8. VIDEO TERMINATION. One source of signal distortion which should be considered is reflections in improperly terminated coaxial lines. This is especially true on short lines (1000 feet or less) and where more than two equipments are connected. Although many video and trigger inputs are matched to 75 ohms, problems still arise when two or more such matched inputs are fed by the same 75 ohms line. The need for proper termination was considered in preparing the material for this handbook.

9. HANDBOOK CONTENT. The handbook is divided into three major parts, Chapters 2, 3 and 4. The operation of the ATCBI-4 and its interfaces with the associated equipment are described in Section 1 of Chapter 2. Section 2 of Chapter 2 consists of a guide for the use of the handbook. Chapter 3 contains all connection information required for landline installations. Chapter 4 contains the same information for radar microwave link installations. The RML connection data is based upon a standard RML/ASR radar cable junction box interface defined in the first part of Chapter 4.

10. CHANGES. The material in Chapters 3 and 4 of this handbook will be brought up to date with a change order as the need arises. Any errors or omissions should be brought to the attention of the nearest FAA regional office.

11.-13. RESERVED.

CHAPTER 2. MANAGEMENT SUMMARY

SECTION 1. ATCBI-4 SYSTEM OPERATION

14. GENERAL. This section of Chapter 2 describes the operation of the ATCBI-4 beacon interrogator system as shown in Fig. 2-1. The elements of the system are identified and their function described. The signal at each interface is characterized as to type and role in the overall system operation. For a more detailed treatment the equipment technical manuals should be consulted.

15. TRANSMITTER SITE EQUIPMENT. Equipment at the transmitter site consists of:

ATCBI-4 Beacon Interrogator Transceiver
Airport Surveillance Radar (ASR)
Video Defruiter
Beacon Antennas

and when landline remoting is not appropriate

Radar Microwave Link (RML) transmitter and receiver.

16. INDICATOR SITE EQUIPMENT. Equipment at the indicator site (also called the Remote site) consists of:

ATCBI-4 Remote Control Box
Decoder/Display

and in some cases,

Radar Microwave Link (RML) transmitter and receiver.

17. TRANSMITTER FUNCTION. The ATCBI-4 beacon interrogator transceiver interfaces with the primary radar, the beacon antennas and the radar cable junction box. The transmitter generates a series of three pulses per interrogation. The pulses designated P1 and P3 are radiated from the unidirectional antenna and P1 (and/or) P2 are radiated from the omni-directional antenna. The radiating frequency is 1030 MHz. The spacing between the pulses designated P1 and P3 determines the interrogation mode and only aircraft transponders programmed to respond in the particular mode are interrogated. There are six modes, designated Mode 1, Mode 2, Mode 3/A, Mode B, Mode C and Mode D. Of these, Modes 3/A and C are commonly used in commercial air traffic control and Mode 2 is used by military users as well as some foreign aircraft.

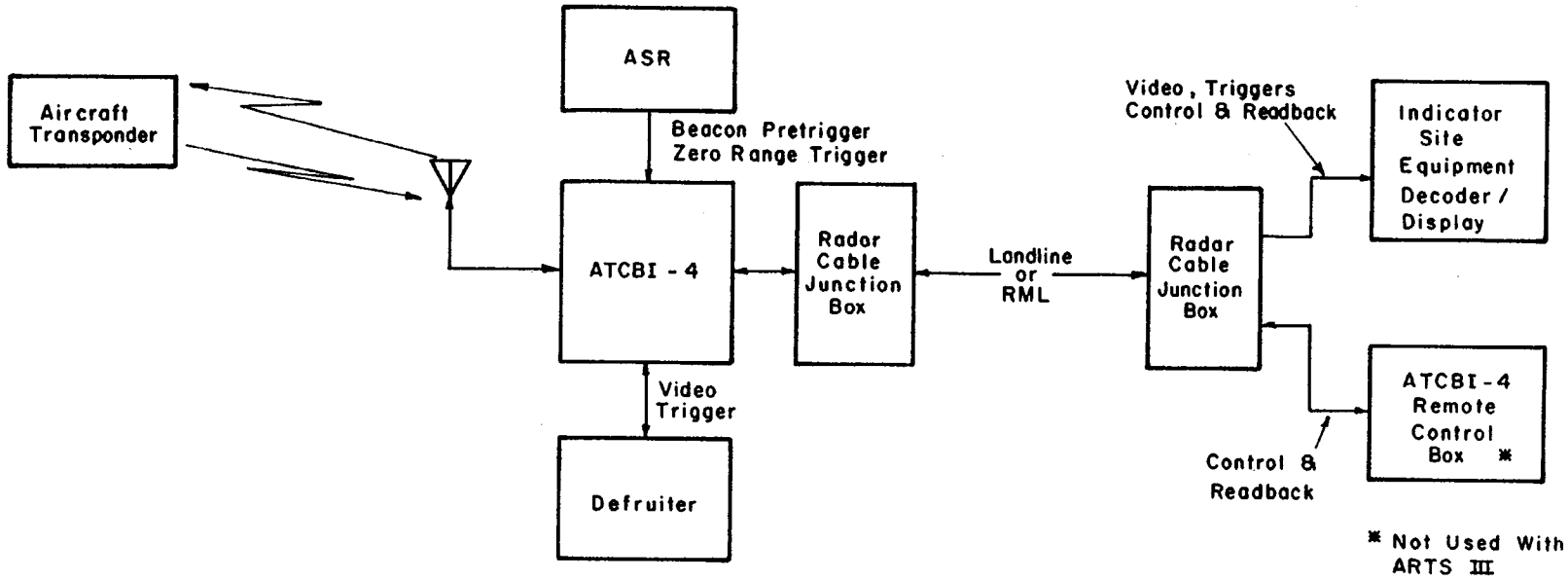

Fig. 2-1 BEACON SYSTEM BLOCK DIAGRAM

a. Sidelobe Suppression. The first and last pulses (i.e., P1 and P3) are radiated by the uni-directional antenna. The second pulse P2, which always follows the first pulse by 2 microseconds, is radiated on the omni-directional antenna. The first and second pulses, one followed closely by the other, are used for sidelobe response suppression. The need for sidelobe suppression (SLS) arises because the uni-directional antenna has finite directivity. Some of the energy sent to the uni-directional antenna is radiated in the sidelobes whose gain in some directions may be only 25 db down from the mainlobe gain. The airborne transponder receiver compares the amplitude of the P1 and P2 pulses and decides whether or not the P1 pulse is being received from the main beam of the interrogator antenna. If the comparison shows that the aircraft is in the main beam, the transponder replies; if not in the main, no reply is transmitted.

b. Improved Sidelobe Suppression. False target reports due to reflections off metal structures have been reduced by the implementation of improved sidelobe suppression. With this technique, P1 is also radiated on the omni-directional antenna at a reduced power level. Improved SLS is normally required at all ATCBI-4 sites. A waiver is required to operate with SLS alone.

18. PRIMARY RADAR ASSOCIATION. Although a ATCBI-4 beacon interrogator is capable of self-triggered, independent operation; it is normally associated with a primary radar. In associated operation, the beacon antenna rotates in synchronism with the primary radar antenna and the beacon triggers are synchronized with the radar pre-trigger. By spacing the primary radar and beacon interrogator transmissions in time, to allow for the different round-trip delays, it is possible to display the returns from both superimposed on the same PPI display. The difference in round-trip delay of the two signals is due to the added delay of the aircraft transponder. In this way, returns from aircraft without beacon capability can be viewed on the same display with the beacon returns.

19. AIRCRAFT TRANSPONDER. The airborne transponder receives the interrogation requests from all the beacon interrogators within range. For each interrogation, the transponder receiver determines if the interrogation mode is one to which it is programmed to reply and if so, the transponder transmitter generates a response on 1090 MHz consisting of up to sixteen pulses. The selection of these pulses servesto convey the aircraft's identity or altitude.

The airborne transponder can respond to only one interrogation at a time. During the response to an interrogation and for some period after that (125 microseconds) the transponder receiver is dead. As the number of interrogators within range of the transponder increases, the probability

of a transponder receiver being dead due to receiver blanking, during an attempted interrogation, increases also. When a transponder is being excessively interrogated it is said to be saturated.

SLS and improved SLS which were mentioned in Par. 13 are features which tend to worsen the transponder saturation problem. The pulses radiated by the omni-directional antenna are a steady source of interference while the pulses sent over the uni-directional antenna are only a real problem when the main beam or first sidelobes are pointed at the aircraft.

20. RECEIVER FUNCTION. The ATCBI-4 beacon interrogator transceiver interfaces with the beacon antenna, the video defruiter and the radar cable junction box. The receiver detects the signal generated by the airborne transponder in response to all interrogators. Sensitivity time control (STC) is used to vary the receiver gain in synchronism with the beacon interrogator transmitter operations. In this way, the receiver gain varies with the range to a potential target. The video defruiter filters the raw video pulses at the receiver output and passes only those pulses whose PRF is the same as the local beacon interrogator. The output of the defruiter is the processed video which is sent to the remote site via the radar cable junction box.

21. INTERSITE CONNECTIONS. The signals which must be sent between the transmitter and indicator or remote sites include the following:

primary radar normal video,
primary radar MTI video,
secondary radar video,
radar pre-trigger,
beacon triggers,
ACP-ARP
control and readback.

There are two ways of transmitting these signals between the two sites; landline and radar microwave link (RML). For short distances (25,000 feet or less), the landline approach may be used. Coaxial cables are used to carry the wideband signals and telephone twisted pair supply controls and readbacks. Unless specifically directed otherwise, the ATCBI-4 line compensator is to be used in all landline installations.

When landline remoting is not practical for one reason or another, or the site separation is greater than 25,000 feet, then RML remoting is used. The radar microwave link provides several wideband channels for the video and triggers, and through multiplexing, a large number of control and readback channels, both instantaneous and non-instantaneous, are available.

Whether landline or RML, the interface at both ends of the link is through the radar cable junction box (RCJB). The RCJB is installed with the radar (ASR). The connections to the RCJB are standard in the landline case, but considerable variability has been found to exist in RML installations. This handbook includes a standard set of connections for the RML case.

22. REMOTE CONTROL. The ATCBI-4 beacon interrogator can be controlled remotely using the remote control box located at the remote site. A control function is initiated when a control line is grounded to the control ground return. An indicator circuit, called a readback, is used to confirm that the control signal has been received at the transmitter site. An indication is received at the indicator site when the readback line is grounded to the readback ground return. The readback lines are also used to bring attention to an alarm condition.

23. DECODER/DISPLAY. The video signal at the interface between the indicator site radar cable junction box and the decoding/display equipment consists of the defruited coded pulse trains generated by the aircraft transponders. These pulse trains are decoded by passing them through a tapped delay line. The output taps are connected to coincidence detectors which sense the presence of the pulses and their relative positions in time. In mode 3/A this information is translated into a series of two or four digits, ranging from zero to seven, which serve to identify the aircraft. Alternately, in mode C the pulse train is translated via a digital to analog converter to relative barometric pressure which is then converted to altitude.

Depending upon the complexity and capability of the display equipment, the identity and altitude information of selected aircraft can be automatically displayed along with the radar and beacon returns. The synchronization of the primary and secondary radar permits the returns from each to be superimposed on the same radar screen. In this way, non-beacon equipped aircraft can be observed simultaneously with the beacon equipped aircraft.

24.-27. RESERVED.

SECTION 2. GUIDE TO HANDBOOK USAGE

28. LANDLINE. All the connection information pertaining to landline installations is to be found in Chapter 3. The chapter is divided into two sections, transmitter site and indicator site. It contains a total of eight paragraphs. The following presentation is conveniently summarized in Table 2-1.

a. Transmitter Site. The 'common connections' which must be made at any and all ATCBI-4 installations are illustrated in Fig. 3-1 and detailed in Table 3-1 of Par. 23.

The second consideration is the defruiter which is to be installed with the ATCBI-4. Connection information is presented in Par. 24 for three defruiter models. These tables are to be used with Fig. 3-1.

Defruiter Model	Type	Table No.
FA-7281	Storage Tube	3-2
FA-8100	Storage Tube	3-3
MX-8757/UPX	Digital	3-4

The final consideration at the transmitter site is the connections associated with the primary radar. These connections include those to the radar itself for beacon sync and zero range trigger, as well as those to the radar cable junction box (RCJB) for transmission to or from the remote site. In Par. 25, the ASR related connections are presented in Table 3-5 and Figs. 3-1 and 3-2. Note that connection information is provided for the ASR-4, ASR-5 & 6 and the ASR-7, all on the same Table and Figure.

b. Indicator Site. Par. 26 contains connection information for the ATCBI-4 Remote Control Box. Fig. 3-3 illustrates the connections to the indicator site RCJB and these are repeated in Table 3-6. Note that connection information is provided for the ASR-4, ASR-5 & 6 and the ASR-7, all on the same Table and Figure.

The remaining four paragraphs of Section 2 of Chapter 3 contain connection information for the decoding equipment. The selection of connection data depends upon the type of decoding equipment at the indicator site. These tables are to be used in conjunction with Figs. 3-3 and 3-4.

Decoding Equipment	Table No.
ATCBI-2	3-7
ATCBI-3	3-8
AN/TPX-42A	3-9
ARTS III	3-10

TABLE 2-1: LANDLINE INSTALLATION SOURCE SUMMARY

INDICATOR SITE EQUIPMENT (DECODE AND DISPLAY)

DEFRUITER	ATCBI-2			ATCBI-3			AN/TPX-42A			ARTS III		
	TABLE	FIGURE	PAGE	TABLE	FIGURE	PAGE	TABLE	FIGURE	PAGE	TABLE	FIGURE	PAGE
FA-7281	3-1 3-2 3-5 3-6 3-7	3-1 3-2 3-3		3-1 3-2 3-5 3-6 3-8	3-1 3-2 3-3		3-1 3-2 3-5 3-6 3-9	3-1 3-2 3-3		3-1 3-2 3-5 3-6 3-10	3-1 3-2 3-3 3-4	
FA-8100	3-1 3-3 3-5 3-6 3-7	3-1 3-2 3-3		3-1 3-3 3-5 3-6 3-8	3-1 3-2 3-3		3-1 3-3 3-5 3-6 3-9	3-1 3-2 3-3		3-1 3-3 3-5 3-6 3-10	3-1 3-2 3-3 3-4	
MX-8757/ UPX	3-1 3-4 3-5 3-6 3-7	3-1 3-2 3-3		3-1 3-4 3-5 3-6 3-8	3-1 3-2 3-3		3-1 3-4 3-5 3-6 3-9	3-1 3-2 3-3		3-1 3-4 3-5 3-6 3-10	3-1 3-2 3-3	

29. RADAR MICROWAVE LINK. All the connection information pertaining to radar microwave link (RML) installations is to be found in Chapter 4. The chapter is divided into three sections, RML/RCJB standard interface, transmitter site, and indicator site. It contains a total of nine paragraphs. The following presentation is conveniently summarized in Tables 2-2, 2-3, 2-4 and 2-5.

a. RML/RCJB Standard Interface. An interface which had not previously been standardized is the one between the RML and the ASR radar cable junction box. Pre-standard installations will be considered to be exceptions or AS BUILTs and must be treated as such. Installation of a BI-4 at such a site will require the use of the AS BUILT drawings as well as the information in this handbook.

When an RML is being installed with the ATCBI-4, or the existing RML is being rewired with the ATCBI-4 installation, it is important that the connection information of Par. 30 be used as a standard.

Site	RML	Table No.
Transmitter	RML-2	4-1
Transmitter	RML-3	4-2
Transmitter	RML-4	4-3
Transmitter	RML-6	4-4
Indicator	RML-2	4-5
Indicator	RML-3	4-6
Indicator	RML-4	4-7
Indicator	RML-6	4-8

These connections are illustrated in Fig. 4-2 for the transmitter site and Figs. 4-3 and 4-4 for the indicator site.

NOTE: THE CONNECTION INFORMATION CONTAINED IN THE REMAINDER OF CHAPTER 4 ASSUMES A STANDARD RML/RCJB INTERFACE.

b. Transmitter Site. The 'common connections' which must be made at any and all ATCBI-4 installations are illustrated in Fig. 4-1 and detailed in Table 4-9 of Par. 31.

The second consideration is the defruiter which is to be installed with the ATCBI-4. Connection information is presented in Par. 32 for three defruiter models. These tables are to be used with Fig. 4-1.

Defruiter Model	Type	Table No.
FA-7281	Storage Tube	4-10
FA-8100	Storage Tube	4-11
MX-8757/UPX	Digital	4-12

The final consideration at the transmitter site is the connections associated with the primary radar. These connections include those to the radar itself for beacon sync and zero range trigger as well as those to the radar cable junction box (RCJB) for transmission to or from the remote site. THE CONNECTIONS TO THE RCJB ASSUME A STANDARD RML/RCJB INTERFACE. In Par. 33, the ASR related connections are presented in Table 4-13 and Figs. 4-1 and 4-2. Note that connection information is provided for the ASR-4, ASR-5 and 6 and the ASR-7, all on the same Table and Figure.

c. Indicator Site. Par. 34 contains connection information for the ATCBI-4 Remote Control Box. Figs. 4-3 and 4-4 illustrate the connections to the indicator site RCJB and these are repeated in Table 4-14. Note that connection information is provided for the ASR-4, ASR-5 and 6 and the ASR-7, all on the same Table and Figure. THE RCJB CONNECTIONS ASSUME A STANDARD RML/RCJB INTERFACE (REF. PAR. 30).

The remaining four paragraphs of Section 3 of Chapter 4 contain connection information for the decoding equipment. The selection of connection data depends upon the type of decoding equipment at the indicator site as well as the type RML in service. These tables are to be used in conjunction with Figs. 4-3, 4-4 and 4-5.

Decoding Equipment	RML	Table No.
ATCBI-2	RML-2,3 & 4	4-15
ATCBI-2	RML-6	4-16
ATCBI-3	RML-2,3 & 4	4-17
ATCBI-3	RML-6	4-18
AN/TPX-42A	RML-2,3 & 4	4-19
AN/TPX-42A	RML-6	4-20
ARTS III	RML-2,3 & 4	4-21
ARTS III	RML-6	4-22

30.-32. RESERVED.

TABLE 2-2: RNL-2 INSTALLATION SOURCE SUMMARY

INDICATOR SITE EQUIPMENT (DECODE AND DISPLAY)

DEFRUITER	ATCBI-2			ATCBI-3			AN/TPX-42A			ARTS III		
	TABLE	FIGURE	PAGE	TABLE	FIGURE	PAGE	TABLE	FIGURE	PAGE	TABLE	FIGURE	PAGE
FA-7281	4-1 4-5 4-9 4-10 4-13 4-14 4-15	4-1 4-2 4-3		4-1 4-5 4-9 4-10 4-13 4-14 4-17	4-1 4-2 4-3		4-1 4-5 4-9 4-10 4-13 4-14 4-19	4-1 4-2 4-3		4-1 4-5 4-9 4-10 4-13 4-14 4-21	4-1 4-2 4-3 4-5	
FA-8100	4-1 4-5 4-9 4-11 4-13 4-14 4-15	4-1 4-2 4-3		4-1 4-5 4-9 4-11 4-13 4-14 4-17	4-1 4-2 4-3		4-1 4-5 4-9 4-11 4-13 4-14 4-19	4-1 4-2 4-3		4-1 4-5 4-9 4-11 4-13 4-14 4-21	4-1 4-2 4-3 4-5	
MX-8757/ UPX	4-1 4-5 4-9 4-12 4-13 4-14 4-15	4-1 4-2 4-3		4-1 4-5 4-9 4-12 4-13 4-14 4-17	4-1 4-2 4-3		4-1 4-5 4-9 4-12 4-13 4-14 4-19	4-1 4-2 4-3		4-1 4-5 4-9 4-12 4-13 4-14 4-21	4-1 4-2 4-3 4-5	

TABLE 2-3: RML-3 INSTALLATION SOURCE SUMMARY

INDICATOR SITE EQUIPMENT (DECODE AND DISPLAY)

DEFRUITER	ATCBI-2			ATCBI-3			AN/TPX-42A			ARTS III		
	TABLE	FIGURE	PAGE	TABLE	FIGURE	PAGE	TABLE	FIGURE	PAGE	TABLE	FIGURE	PAGE
FA-7281	4-2 4-6 4-9 4-10 4-13 4-14 4-15	4-1 4-2 4-3		4-2 4-6 4-9 4-10 4-13 4-14 4-17	4-1 4-2 4-3		4-2 4-6 4-9 4-10 4-13 4-14 4-19	4-1 4-2 4-3		4-2 4-6 4-9 4-10 4-13 4-14 4-21	4-1 4-2 4-3 4-5	
FA-8100	4-2 4-6 4-9 4-11 4-13 4-14 4-15	4-1 4-2 4-3		4-2 4-6 4-9 4-11 4-13 4-14 4-17	4-1 4-2 4-3		4-2 4-6 4-9 4-11 4-13 4-14 4-19	4-1 4-2 4-3		4-2 4-6 4-9 4-11 4-13 4-14 4-21	4-1 4-2 4-3 4-5	
MX-8757/ UPX	4-2 4-6 4-9 4-12 4-13 4-14 4-15	4-1 4-2 4-3		4-2 4-6 4-9 4-12 4-13 4-14 4-17	4-1 4-2 4-3		4-2 4-6 4-9 4-12 4-13 4-14 4-19	4-1 4-2 4-3		4-2 4-6 4-9 4-12 4-13 4-14 4-21	4-1 4-2 4-3 4-5	

TABLE 2-4: RML-4 INSTALLATION SOURCE SUMMARY

INDICATOR SITE EQUIPMENT (DECODE AND DISPLAY)

DEFRUITER	ATCBI-2			ATCBI-3			AN/TPX-42A			ARTS III		
	TABLE	FIGURE	PAGE	TABLE	FIGURE	PAGE	TABLE	FIGURE	PAGE	TABLE	FIGURE	PAGE
FA-7281	4-3			4-3			4-3			4-3		
	4-7			4-7			4-7			4-7		
	4-9			4-9			4-9			4-9		
	4-10			4-10			4-10			4-10		
	4-13			4-13			4-13			4-13		
	4-14			4-14			4-14			4-14		
	4-15			4-17			4-19			4-21		
		4-1			4-1			4-1			4-1	
		4-2			4-2			4-2			4-2	
		4-3			4-3			4-3			4-3	
											4-5	
FA-8100	4-3			4-3			4-3			4-3		
	4-7			4-7			4-7			4-7		
	4-9			4-9			4-9			4-9		
	4-11			4-11			4-11			4-11		
	4-13			4-13			4-13			4-13		
	4-14			4-14			4-14			4-14		
	4-15			5-17			4-19			4-21		
		4-1			4-1			4-1			4-1	
		4-2			4-2			4-2			4-2	
		4-3			4-3			4-3			4-3	
											4-5	
MX-8757/ UPX	4-3			4-3			4-3			4-3		
	4-7			4-7			4-7			4-7		
	4-9			4-9			4-9			4-9		
	4-12			4-12			4-12			4-12		
	4-13			4-13			4-13			4-13		
	4-14			4-14			4-14			4-14		
	4-15			4-17			4-19			4-21		
		4-1			4-1			4-1			4-1	
		4-2			4-2			4-2			4-2	
		4-3			4-3			4-3			4-3	
											4-5	

TABLE 2-5: RML-6 INSTALLATION SOURCE SUMMARY

INDICATOR SITE EQUIPMENT (DECODE AND DISPLAY)

DEFRUITER	ATCBI-2			ATCBI-3			AN/TPX-42A			ARTS III		
	TABLE	FIGURE	PAGE	TABLE	FIGURE	PAGE	TABLE	FIGURE	PAGE	TABLE	FIGURE	PAGE
FA-7281	4-4 4-8 4-9 4-10 4-13 4-14 4-15	4-1 4-2 4-4		4-4 4-8 4-9 4-10 4-13 4-14 4-17	4-1 4-2 4-4		4-4 4-8 4-9 4-10 4-13 4-14 4-19	4-1 4-2 4-4		4-4 4-8 4-9 4-10 4-13 4-14 4-21	4-1 4-2 4-4 4-5	
FA-8100	4-4 4-8 4-9 4-11 4-13 4-14 4-15	4-1 4-2 4-4		4-4 4-8 4-9 4-11 4-13 4-14 4-17	4-1 4-2 4-4		4-4 4-8 4-9 4-11 4-13 4-14 4-19	4-1 4-2 4-4		4-4 4-8 4-9 4-11 4-13 4-14 4-21	4-1 4-2 4-4 4-5	
MX-8757/ UPX	4-4 4-8 4-9 4-12 4-13 4-14 4-15	4-1 4-2 4-4		4-4 4-8 4-9 4-12 4-13 4-14 4-17	4-1 4-2 4-4		4-4 4-8 4-9 4-12 4-13 4-14 4-19	4-1 4-2 4-4		4-4 4-8 4-9 4-12 4-13 4-14 4-21	4-1 4-2 4-4 4-5	

CHAPTER 3. LANDLINE INSTALLATIONS

SECTION 1. TRANSMITTER SITE

33. COMMON CONNECTIONS. The common connections must be made at any and all ATCBI-4 installations. These connections are illustrated in Fig. 3-1 and presented in detail in Table 3-1. 41 cables are used to interconnect the various units at the transmitter site. Pre-fabricated cables are used for inter-rack wiring and bulk cable and connectors are provided for on-site fabrication of intra-rack wiring. The Channel 1 and Channel 2 racks can be separated by as much as 1000 feet to suit installation requirements. The cable numbers and descriptions are in agreement with those in Fig. 12-1 of the ATCBI-4 technical manual. Where the cable descriptions were not in agreement, new cable numbers have been assigned.

CHAPTER 3. LANDLINE INSTALLATIONS

SECTION 1. TRANSMITTER SITE

33. COMMON CONNECTIONS. The common connections must be made at any and all ATCBI-4 installations. These connections are illustrated in Fig. 3-1 and presented in detail in Table 3-1. 41 cables are used to interconnect the various units at the transmitter site. Pre-fabricated cables are used for inter-rack wiring and bulk cable and connectors are provided for on-site fabrication of intra-rack wiring. The Channel 1 and Channel 2 racks can be separated by as much as 1000 feet to suit installation requirements. The cable numbers and descriptions are in agreement with those in Fig. 12-1 of the ATCBI-4 technical manual. Where the cable descriptions were not in agreement, new cable numbers have been assigned.

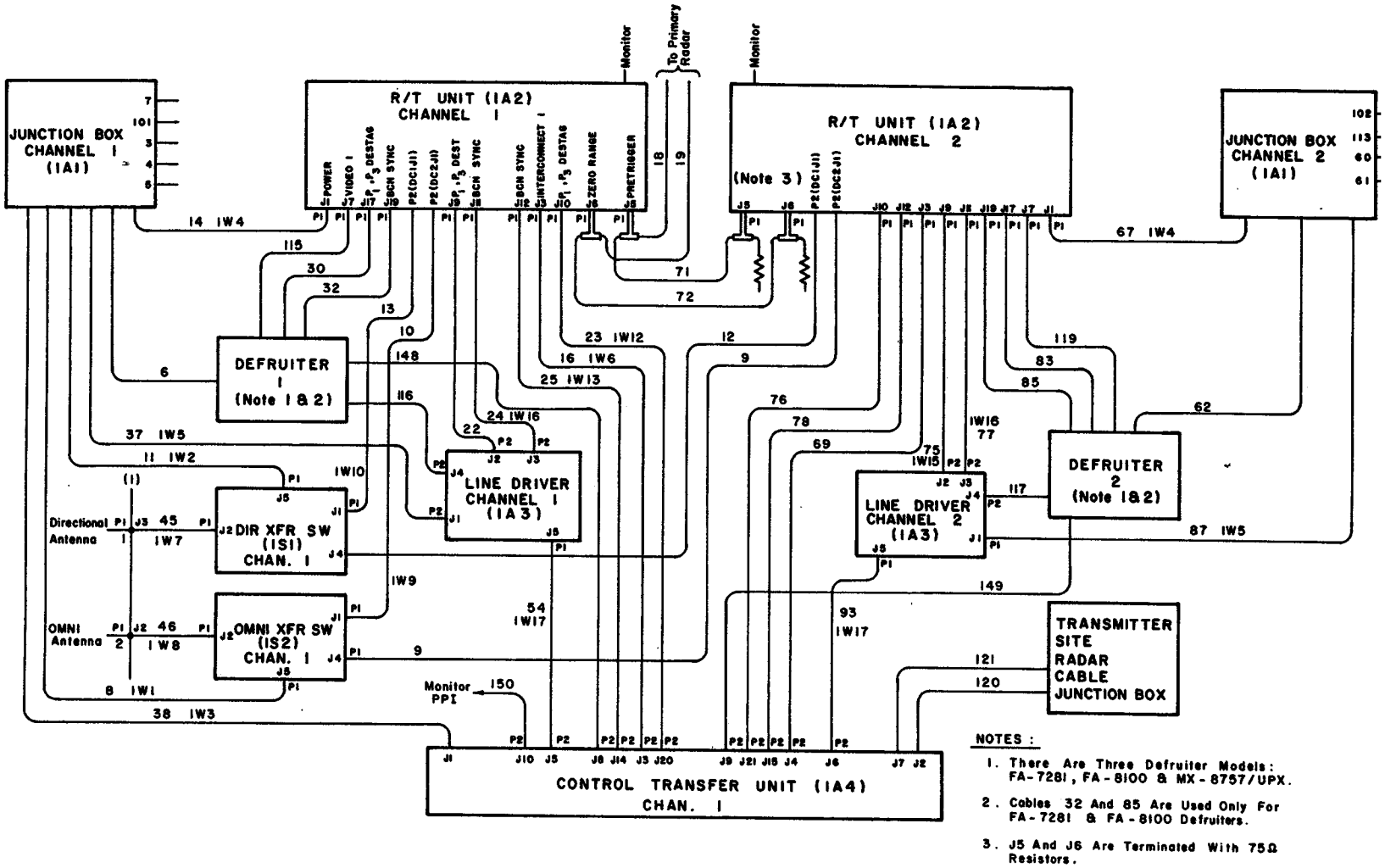

NOTES :

1. There Are Three Defruiter Models: FA-7281, FA-8100 & MX-8757/UPX.
2. Cables 32 And 85 Are Used Only For FA-7281 & FA-8100 Defruiters.
3. J5 And J6 Are Terminated With 75Ω Resistors.

Fig. 3-1 ATCBI-4 TRANSMITTER SITE CONNECTIONS - LANDLINE REMOTING

TABLE 3-1: ATCBI-4 COMMON CONNECTIONS

CABLE NO.	WIRE TYPE	FROM			TO			FUNCTION
		UNIT	CONNECTOR	PIN	UNIT	CONNECTOR	PIN	
1	COAX 50 Ω	RACK ASSEMBLY (1) CHANNEL 1	P1(1J3) UG-59E/U		DIRECTIONAL ANTENNA			DIRECTIONAL RF
2			P1(1J2) UG-59E/U		OMNI-DIRECTIONAL ANTENNA			OMNI RF
3	AWG 14	JUNCTION BOX (1A1) CHANNEL 1	1A1TB1 1A1TB1 1A1E1	1 2	PRIMARY POWER SOURCE			120 VAC 120 VAC COMMON GROUND
4			1A1TB2 1A1TB2 1A1E3	4 5	POWER SOURCE CONVENIENCE OUTLET			120 VAC 120 VAC COMMON GROUND
5	AWG 16		1A1TB1 1A1TB3	4 1	NO CONTROL IND. CHANNEL 1			120 VAC NO CONTROL INDICATOR

TABLE 3-1: ATCBI-4 COMMON CONNECTIONS (Cont'd.)

CABLE NO.	WIRE TYPE	FROM			TO			FUNCTION
		UNIT	CONNECTOR	PIN	UNIT	CONNECTOR	PIN	
7	AWG 16	JUNCTION BOX (1A1) CHANNEL 1	1A1TB2 1A1TB1 1A1E2	3 9	PRIMARY POWER SOURCE			120 VAC 120 VAC COMMON GROUND
8	AWG 20	OMNI TRANSFER SWITCH (1S2) CHANNEL 1	P1(1S2J5) MS3116F10-6S	A B C	JUNCTION BOX (1A1) CHANNEL 1	1A1TB3 1A1TB3 1A1TB2	2 3 7	+48 VDC ON LINE GROUND
9	COAX 50Ω		P1(1S2J4) M39012/01-0002		OMNI MONITOR PROBE (1A2DC2) CHANNEL 2	P2(1A2DC2J1) M39012/01-0002		CHANNEL 2 OMNI RF
10			P1(1S2J1) M39012/01-0002		OMNI MONITOR PROBE (1A2DC2) CHANNEL 1	P2(1A2DC2J1) M39012/01-0002		CHANNEL 1 OMNI RF

TABLE 3-1: ATCBI-4 COMMON CONNECTIONS (Cont'd.)

CABLE NO.	WIRE TYPE	FROM			TO			FUNCTION
		UNIT	CONNECTOR	PIN	UNIT	CONNECTOR	PIN	
11	AWG 20	DIRECTIONAL TRANSFER SWITCH (1S1) CHANNEL 1	P1(1S1J5) MS3116F10-6S	A B C	JUNCTION BOX (1A1) CHANNEL 1	1A1TB3 1A1TB3 1A1TB2	2 3 8	+48 VDC ON LINE GROUND
12	COAX 50Ω		P1(1S1J4) M39012/01-0002		DIRECTIONAL MONITOR PROBE (1A2DC1) CHANNEL 2	P2(1A2DC1J1) M39012/01-0002		CHANNEL 2 DIRECTIONAL RF
13			P1(1S1J1) M39012/01-0002		DIRECTIONAL MONITOR PROBE (1A2DC1) CHANNEL 1	P2(1A2DC1J1) M39012/01-0002		CHANNEL 1 DIRECTIONAL RF

TABLE 3-1: ATCBI-4 COMMON CONNECTIONS (Cont'd.)

CABLE NO.	WIRE TYPE	FROM			TO			FUNCTION
		UNIT	CONNECTOR	PIN	UNIT	CONNECTOR	PIN	
14	AWG 16	RECEIVER/ TRANSMITTER UNIT (1A2) CHANNEL 1	P1(1A2J1)	A	JUNCTION BOX (1AJ) CHANNEL 1	1A1TB2	7	GROUND
				B		1A1TB3	1	NO CONTROL INDICATOR
				C		1A1TB3	2	TRANS SW +48 VDC
				D		1A1TB3	3	ON LINE
				E		1A1TB3	4	DEFRUITER ON RDBK
				F		1A1TB3	5	DEFRUITER ON
				G		1A1TB3	6	DEFRUITER NO CONTROL
				H		1A1TB3	7	DEFRUITER GROUND
				J		1A1TB1	5	NO CONTROL RET
				K		1A1TB3	8	SPARE
				N		1A1TB2	1	AC HOT
			M3106A22-19S	P		1A1TB1	7	AC COMMON
15			P1(1A2J2)	H	MONITOR 1			RESET
				J				RANGE ERROR INHIBIT
				K				ON LINE
				L				INTERROGATE ENABLE
				M				HI-VOLTAGE ENABLE
				N				HI-VOLTAGE ENABLE
			M3106A22-19P	P				GROUND

TABLE 3-1: ATCBI-4 COMMON CONNECTIONS (Cont'd)

CABLE NO.	WIRE TYPE	FROM			TO			FUNCTION
		UNIT	CONNECTOR	PIN	UNIT	CONNECTOR	PIN	
16	AWG 20 or AWG 19 TEL PAIRS	RECEIVER/ TRANSMITTER UNIT (1A2) CHANNEL 1	P1(1A2J3)	F	CONTROL TRANSFER UNIT (1A4)	P2(1A4J3)	F	SHIELD GROUND
				K			K	+48 VDC OTHER CHANNEL
				L			L	CHANNEL SELECT
				M			M	LOCAL ENABLE
				N			N	MODE SELECT RML 1
				P			P	MODE SELECT RML 2
				R			R	MODE SELECT RML 4
				S			S	MODE DESIG. EUA-1
				T			T	MODE DESIG. EUA-2
				U			U	REMOTE INTER. CONTROL
				V			V	POWER ON RDBK
				X			X	INTERROGATE RDBK
				Y			Y	RANGE ERROR RDBK
				Z			Z	DEFRUITER RDBK
				a			a	NO CONTROL RDBK
			MS3106A28-12S	b		MS3107A28-12SW	b	GROUND
22	COAX 75Ω		P1(1A2J9) M39012/16-0002		LINE DRIVER (1A3) CHANNEL 1	P2(1A3J2) M39012/16-0002		P_1, P_3 DESTAG (MODE TRIG 1)

TABLE 3-1: ATCBI-4 COMMON CONNECTIONS (Cont'd.)

CABLE NO.	WIRE TYPE	FROM			TO			FUNCTION
		UNIT	CONNECTOR	PIN	UNIT	CONNECTOR	PIN	
60	AWG 14	JUNCTION BOX (1A1) CHANNEL 2	1A1TB2	4	POWER SOURCE CONVENIENCE OUTLET			120 VAC
			1A1TB2	5				120 VAC COMMON
			1A1TB3					GROUND
61	AWG 16		1A1TB1	4	NO CONTROL INDICATOR CHANNEL 2			120 VAC
			1A1TB3	1				NO CONTROL
67		RECEIVER/ TRANSMITTER UNIT (1A2) CHANNEL 2	P1(1A2J1)	A	JUNCTION BOX (1A1) CHANNEL 2	1A1TB2	7	GROUND
				B		1A1TB3	1	NO CONTROL IND.
				C		1A1TB3	2	TRANS SW +48 VDC
				D		1A1TB3	3	ON LINE
				E		1A1TB3	4	DEFRUITER ON RDBK
				F		1A1TB3	5	DEFRUITER ON
				G		1A1TB3	6	DEFRUITER NO CONTROL
				H		1A1TB3	7	DEFRUITER GROUND
				J		1A1TB1	5	NO CONTROL RET
				K		1A1TB3	8	SPARE
				N		1A1TB2	1	120 VAC
				P		1A1TB1	7	120 VAC COMMON
			MS3106A22-19S					

TABLE 3-1: ATCBI-4 COMMON CONNECTIONS (Cont'd.)

CABLE NO.	WIRE TYPE	FROM			TO			FUNCTION
		UNIT	CONNECTOR	PIN	UNIT	CONNECTOR	PIN	
68	AWG 16	RECEIVER/ TRANSMITTER UNIT (1A2) CHANNEL 2	P1(1A2J2) MS3106A22-19P	H	MONITOR 2			RESET
				J				RANGE ERROR INHIBIT
				K				ON LINE
				L				INTERROGATE ENABLE
				M				HI-VOLTAGE ENABLE
				N				HI-VOLTAGE ENABLE
				P				GROUND
69	AWG 20 or AWG 19 TEL PAIRS		P1(1A2J3) MS3106A28-12S	F	CONTROL TRANSFER UNIT (1A4)	P2(1A4J4) MS3107A28-12SX	F	SHIELD GROUND
				K			K	+48 VDC OTHER CHANNEL
				L			L	CHANNEL 2 SELECT
				M			M	LOCAL ENABLE
				N			N	MODE SELECT RML 1
				P			P	MODE SELECT RML 2
				R			R	MODE SELECT RML 4
				S			S	MODE DESIG. EUA 1
				T			T	MODE DESIG. EUA 2
				U			U	INTERROGATOR CONTROL
				V			V	POWER ON RDBK
				X			X	INTERROGATE RDBK
				Y			Y	RANGE ERROR RDBK
				Z			Z	DEFRUITER RDBK
				a			a	NO CONTROL RDBK
				b			b	GROUND

TABLE 3-1: ATCBI-4 COMMON CONNECTIONS (Cont'd.)

CABLE NO.	WIRE TYPE	FROM			TO			FUNCTION
		UNIT	CONNECTOR	PIN	UNIT	CONNECTOR	PIN	
71	COAX 75Ω	RECEIVER/ TRANSMITTER UNIT (1A2) CHANNEL 2	P1(1A2J5) M39012/16-0002		RECEIVER/ TRANSMITTER UNIT (1A2) CHANNEL 1	P2(1A2J5) M39012/16-0002		RADAR PRETRIGGER
72			P1(1A2J6) M39012/16-0002			P2(1A2J6) M39012/16-0002		RADAR ZERO RANGE TRIGGER
75			P1(1A2J9) M39012/16-0002		LINE DRIVER (1A3) CHANNEL 2	P2(1A3J2) M39012/16-0002		P_1,P_3 DESTAG

TABLE 3-1: ATCBI-4 COMMON CONNECTIONS (Cont'd.)

CABLE NO.	WIRE TYPE	FROM			TO			FUNCTION
		UNIT	CONNECTOR	PIN	UNIT	CONNECTOR	PIN	
76	COAX 75Ω	RECEIVER/ TRANSMITTER UNIT (1A2) CHANNEL 2	P1(1A2J10) M39012/16-0002		CONTROL TRANSFER UNIT (1A4)	P2(1A4J21) M39012/16-0002		P_1,P_3 DESTAG (MODE TRIG 2)
77			P1(1A2J11) M39012/16-0002		LINE DRIVER (1A3) CHANNEL 2	P2(1A3J3) M39012/16-0002		BCN SYNC 1
78			P1(1A2J12) M39012/16-0002		CONTROL TRANSFER UNIT (1A4)	P2(1A4J15) M39012/16-0002		BCN SYNC 2
87	AWG 16	LINE DRIVER (1A3) CHANNEL 2	P1(1A3J1) MS3106A22-15S	A B C	JUNCTION BOX (1A1) CHANNEL 2	1A1TB2 1A1TB1 1A1TB2	2 8 9	120 VAC 120 VAC COMMON GROUND

TABLE 3-1: ATCBI-4 COMMON CONNECTIONS (Cont'd.)

CABLE NO.	WIRE TYPE	FROM			TO			FUNCTION
		UNIT	CONNECTOR	PIN	UNIT	CONNECTOR	PIN	
93	COAX 75Ω	LINE DRIVER (1A3) CHANNEL 2	P1(1A3J5) M39012/16-0002		CONTROL TRANSFER UNIT (1A4)	P2(1A4J6) M39012/16-0002		VIDEO-TRIG (VIDEO 1)
101	AWG 14	JUNCTION BOX (1A1) CHANNEL 1	1A1TB1 1A1TB1	4 5	POWER SOURCE NO CONTROL IND. CHANNEL 1			120 VAC RETURN
102		JUNCTION BOX (1A1) CHANNEL 2	1A1TB1 1A1TB1	4 5	POWER SOURCE NO CONTROL IND. CHANNEL 2			120 VAC RETURN
113			1A1TB1 1A1TB1 1A1E1	1 2	PRIMARY POWER SOURCE			120 VAC 120 VAC COMMON GROUND

TABLE 3-1: ATCBI-4 COMMON CONNECTIONS (Cont'd.)

CABLE NO.	WIRE TYPE	FROM			TO			
		UNIT	CONNECTORS	PIN	UNIT	CONNECTORS	PIN	FUNCTION
150	COAX 75Ω	CONTROL TRANSFER UNIT (1A4)	P1(1A4J10) M39012/16-0002		ASR-4,5,6 MONITOR PPI	J1701		BEACON SELECTED VIDEO
					ASR-7 CONTROL UNIT	7A8J11		

34. DEFRUITER CONNECTIONS. All terminal installations are assumed to require a defruiter. Connection information is provided for defruiter models FA-7281, FA-8100 and MX-8757/UPX. Each ATCBI-4 channel has its own defruiter. Channel 1 defruiter is connected using cables 30, 32, 115, 116 and 6 and Channel 2 defruiter uses cables 83, 85, 119, 117 and 62. CAUTIONARY NOTE: ANY JUMPERS BETWEEN CHANNEL 1 AND CHANNEL 2 POWER CONNECTION TERMINAL BLOCKS SHOULD BE REMOVED. It should be noted that cables 32 and 85 are not required with the MX-8757/UPX defruiter.

The defruiter connections are illustrated in Fig. 3-1 and detailed in Table 3-2 for the FA-7281 defruiter, Table 3-3 for the FA-8100 defruiter and Table 3-4 for the MX-8757/UPX defruiter. NOTE: ONE AND ONLY ONE TABLE SHOULD BE USED DEPENDING UPON THE DEFRUITER MODEL BEING USED.

TABLE 3-2: FA-7281 DEFRUITER CONNECTIONS

CABLE NO.	WIRE TYPE	FROM			TO			FUNCTION
		UNIT	CONNECTOR	PIN	UNIT	CONNECTOR	PIN	
30	COAX 75Ω	RECEIVER/ TRANSMITTER UNIT (1A2) CHANNEL 1	P1(1A2J17) M39012/16-0002		DEFRUITER CHANNEL 1	J4015 M39012/16-0002		P_1,P_3 DESTAG
32			P1(1A2J19) M39012/16-0002			J4013 M39012/16-0002		BEACON SYNC
115			P1(1A2J7) M39012/16-0002			J4017 M39012/16-0002		VIDEO 1 (DEFRUITER INPUT)
116		DEFRUITER CHANNEL 1	J4019 M39012/16-0002		LINE DRIVER (1A3) CHANNEL 1	P2(1A3J4) M39012/16-0002		VIDEO 1 (DEFRUITER OUTPUT)
148			J4020 M39012/16-0002		CONTROL TRANSFER UNIT (1A4)	P2(1A4J8) M39012/16-0002		VIDEO 2 (DEFRUITER OUTPUT)

TABLE 3-2: FA-7281 DEFRUITER CONNECTIONS (Cont'd.)

CABLE NO.	WIRE TYPE	FROM			TO			FUNCTION
		UNIT	CONNECTOR	PIN	UNIT	CONNECTOR	PIN	
6		JUNCTION BOX (1A1) CHANNEL 1			DEFRUITER CHANNEL 1			
	AWG 16		1A1TB2	1		TB4002	4	120 VAC
			1A1TB1	6		TB4002	2	120 VAC COMMON
			1A1TB2	8		TB4002	1	GROUND
			1A1TB3	4		TB4001	2	DEFRUITER ON RDBK
			1A1TB3	5		TB4001	1	DEFRUITER ON
			1A1TB3	6		TB4001	3	DEFRUITER NO CONTROL
			1A1TB3	7		TB4001	5	GROUND
83		RECEIVER/ TRANSMITTER UNIT (1A2) CHANNEL 2			DEFRUITER CHANNEL 2			
	COAX 75Ω		P1(1A2J17) M39012/16-0002			J4015 M39012/16-0002		P_1,P_3 DESTAG
85			P1(1A2J19) M39012/16-0002			J4013 M39012/16-0002		BEACON SYNC
119			P1(1A2J7) M39012/16-0002			J4017 M39012/16-0002		VIDEO 1 (DEFRUITER INPUT)

TABLE 3-2: FA-7281 DEFRUITER CONNECTIONS (Cont'd.)

CABLE NO.	WIRE TYPE	FROM			TO			FUNCTION
		UNIT	CONNECTOR	PIN	UNIT	CONNECTOR	PIN	
117	COAX 75Ω	DEFRUITER CHANNEL 2	J4019 M39012/16-0002		LINE DRIVER (1A3) CHANNEL 2	P2(1A3J4) M39012/16-0002		VIDEO 1 (DEFRUITER OUTPUT)
149			J4020 M39012/16-0002		CONTROL TRANSFER UNIT (1A4)	P2(1A4J9) M39012/16-0002		VIDEO 2 (DEFRUITER OUTPUT)
62	AWG 16	JUNCTION BOX (1A1) CHANNEL 2	1A1TB2	1	DEFRUITER CHANNEL 2	TB4002	4	120 VAC
			1A1TB1	6		TB4002	2	120 VAC COMMON
			1A1TB2	8		TB4002	1	GROUND
			1A1TB3	4		TB4001	2	DEFRUITER ON RDBK
			1A1TB3	5		TB4001	1	DEFRUITER ON
			1A1TB3	6		TB4001	3	DEFRUITER NO CONTROL
			1A1TB3	7		TB4001	5	GROUND

TABLE 3-3: FA-8100 DEFRUITER CONNECTIONS

CABLE NO.	WIRE TYPE	FROM			TO			FUNCTION
		UNIT	CONNECTOR	PIN	UNIT	CONNECTOR	PIN	
30	COAX 75Ω	RECEIVER/ TRANSMITTER UNIT (1A2) CHANNEL 1	P1(1A2J17) M39012/16-0002		DEFRUITER CHANNEL 1	J4015 M39012/16-0002		P_1,P_3 DESTAG
32			P1(1A2J19) M39012/16-0002			J4013 M39012/16-0002		BEACON SYNC
115			P1(1A2J7) M39012/16-0002			J4017 M39012/16-0002		VIDEO 1 (DEFRUITER INPUT)
116		DEFRUITER CHANNEL 1	J4019 M39012/16-0002		LINE DRIVER (1A3) CHANNEL 1	P2(1A3J4) M39012/16-0002		VIDEO 1 (DEFRUITER OUTPUT)
148			J4020 M39012/16-0002		CONTROL TRANSFER UNIT (1A4)	P2(1A4J8) M39012/16-0002		VIDEO 2 (DEFRUITER OUTPUT)

TABLE 3-3: FA-8100 DEFRUITER CONNECTIONS (Cont'd.)

CABLE NO.	WIRE TYPE	FROM			TO			FUNCTION
		UNIT	CONNECTOR	PIN	UNIT	CONNECTOR	PIN	
6	AWG 16	JUNCTION BOX (1A1) CHANNEL 1	1A1TB2	1	DEFRUITER CHANNEL 1	TB4002	4	115 VAC
			1A1TB1	6		TB4002	3	115 VAC COMMON
			1A1TB2	8		TB4002	2	GROUND
			1A1TB2	4		TB4002	5	115 VAC
			1A1TB2	5		TB4002	6	115 VAC COMMON
			1A1TB3	4		TB4001	2	DEFRUITER ON RDBK
			1A1TB3	5		TB4001	1	DEFRUITER ON
			1A1TB3	6		TB4001	3	DEFRUITER NO CONTROL
			1A1TB3	7		TB4001	5	GROUND
83	COAX 75Ω	RECEIVER/ TRANSMITTER UNIT (1A2) CHANNEL 2	P1(1A2J17) M39012/16-0002		DEFRUITER CHANNEL 2	J4015 M39012/16-0002		P_1,P_3 DESTAG
85			P1(1A2J19) M39012/16-0002			J4013 M39012/16-0002		BEACON SYNC
119			P1(1A2J7) M39012/16-0002			J4017 M39012/16-0002		VIDEO 1 (DEFRUITER INPUT)

TABLE 3-3: FA-8100 DEFRUITER CONNECTIONS (Cont'd.)

CABLE NO.	WIRE TYPE	FROM			TO			FUNCTION
		UNIT	CONNECTOR	PIN	UNIT	CONNECTOR	PIN	
117	COAX 75Ω	DEFRUITER CHANNEL 2	J4019 M39012/16-0002		LINE DRIVER (1A3) CHANNEL 2	P2(1A3J4) M39012/16-0002		VIDEO 1 (DEFRUITER OUTPUT)
149			J4020 M39012/16-0002		CONTROL TRANSFER UNIT (1A4)	P2(1A4J9) M39012/16-0002		VIDEO 2 (DEFRUITER OUTPUT)
62	AWG 16	JUNCTION BOX (1A1) CHANNEL 2			DEFRUITER CHANNEL 2			
			1A1TB2	1		TB4002	4	120 VAC
			1A1TB1	6		TB4002	3	120 VAC COMMON
			1A1TB2	8		TB4002	2	GROUND
			1A1TB2	4		TB4002	5	115 VAC
			1A1TB2	5		TB4002	6	115 VAC COMMON
			1A1TB3	4		TB4001	2	DEFRUITER ON RDBK
			1A1TB3	5		TB4001	1	DEFRUITER ON
			1A1TB3	6		TB4001	3	DEFRUITER NO CONTROL
			1A1TB3	7		TB4001	5	GROUND

TABLE 3-4: MX8757/UPX DEFRUITER CONNECTIONS

CABLE NO.	WIRE TYPE	FROM			TO			FUNCTION
		UNIT	CONNECTOR	PIN	UNIT	CONNECTOR	PIN	
30	COAX 75Ω	RECEIVER/ TRANSMITTER UNIT (1A2) CHANNEL 1	P1(1A2J17) M39012/16-0002		DEFRUITER CHANNEL 1	J9 M39012/16-0002		P_1,P_3 DESTAG
115			P1(1A2J7) M39012/16-0002			J10 M39012/16-0002		VIDEO 1 (DEFRUITER INPUT)
116		DEFRUITER CHANNEL 1	J6 M39012/16-0002		LINE DRIVER (1A3) CHANNEL 1	P2(1A3J4) M39012/16-0002		VIDEO 1 (DEFRUITER OUTPUT)
148			J7 M39012/16-0002		CONTROL TRANSFER UNIT (1A4)	P2(1A4J8) M39012/16-0002		VIDEO 2 (DEFRUITER OUTPUT)

TABLE 3-4: MX8757/UPX DEFRUITER CONNECTIONS (Cont'd.)

CABLE NO.	WIRE TYPE	FROM			TO			FUNCTION
		UNIT	CONNECTOR	PIN	UNIT	CONNECTOR	PIN	
62	AWG 16	JUNCTION BOX (1A1) CHANNEL 2	1A1TB2	1	DEFRUITER CHANNEL 2	J3	B	120 VAC
			1A1TB1	6		J3	A	120 VAC COMMON
			1A1TB2	8		J3	C	GROUND
						MS3102E10SL-3S		
			1A1TB3	4		J2	H	DEFRUITER ON RDBK
			1A1TB3	5		J2	F	DEFRUITER ON
			1A1TB3	6		J2	J	DEFRUITER NO CONTROL
			1A1TB3	7		J2	G	GROUND
						MS3102R18-1S		
83	COAX 75Ω	RECEIVER/ TRANSMITTER UNIT (1A2) CHANNEL 2	P1(1A2J17) M39012/16-0002		DEFRUITER CHANNEL 2	J9 M39012/16-0002		P_1,P_3 DESTAG
119			P1(1A2J7) M39012/16-0002			J10 M39012/16-0002		VIDEO 1 (DEFRUITER INPUT)

TABLE 3-4: MX8757/UPX DEFRUITER CONNECTIONS (Cont'd.)

CABLE NO.	WIRE TYPE	FROM			TO			FUNCTION
		UNIT	CONNECTOR	PIN	UNIT	CONNECTOR	PIN	
6	AWG 16	JUNCTION BOX (1A1) CHANNEL 1	1A1TB2	1	DEFRUITER CHANNEL 1	J3	B	120 VAC
			1A1TB1	6		J3	A	120 VAC COMMON
			1A1TB2	8		J3 MS3102E10SL-3S	C	GROUND
			1A1TB3	4		J2	H	DEFRUITER ON RDBK
			1A1TB3	5		J2	F	DEFRUITER ON
			1A1TB3	6		J2	J	DEFRUITER NO CONTROL
			1A1TB3	7		J2 MS3102R1S-1S	G	GROUND
117	COAX 75Ω	DEFRUITER CHANNEL 2	J6 M39012/16-0002		LINE DRIVER (1A3) CHANNEL 2	P2(1A3J4) M39012/16-0002		VIDEO 1 (DEFRUITER OUTPUT)
149			J7 M39012/16-0002		CONTROL TRANSFER UNIT (1A4)	P2(1A4J9) M39012/16-0002		VIDEO 2 (DEFRUITER OUTPUT)

35. PRIMARY RADAR CONNECTIONS. Most if not all ATCBI-4 installations will be associated with a primary radar (ASR). Connections to the primary radar utilize cables 18, 19, 120 and 121 as shown in Figs. 3-1 and 3-2. The first two cables provide the ATCBI-4 with a radar pretrigger and a radar zero range trigger respectively; the last two cables provide the link between the ATCBI-4 transmitter site equipment and the indicator site equipment. Detailed connection information is provided in Fig. 3-2 and Table 3-5.

A modification of the primary radar is required to make the zero range trigger available. The nearest FAA regional office should be consulted for modification details.

NOTE: CONNECTION INFORMATION IS PROVIDED FOR THE ASR-4, ASR-5 & 6 AND THE ASR-7, ALL ON THE SAME FIGURE (FIG. 3-2) AND TABLE (TABLE 3-5). CARE SHOULD BE EXERCISED IN USING THIS INFORMATION.

36.-39 RESERVED.

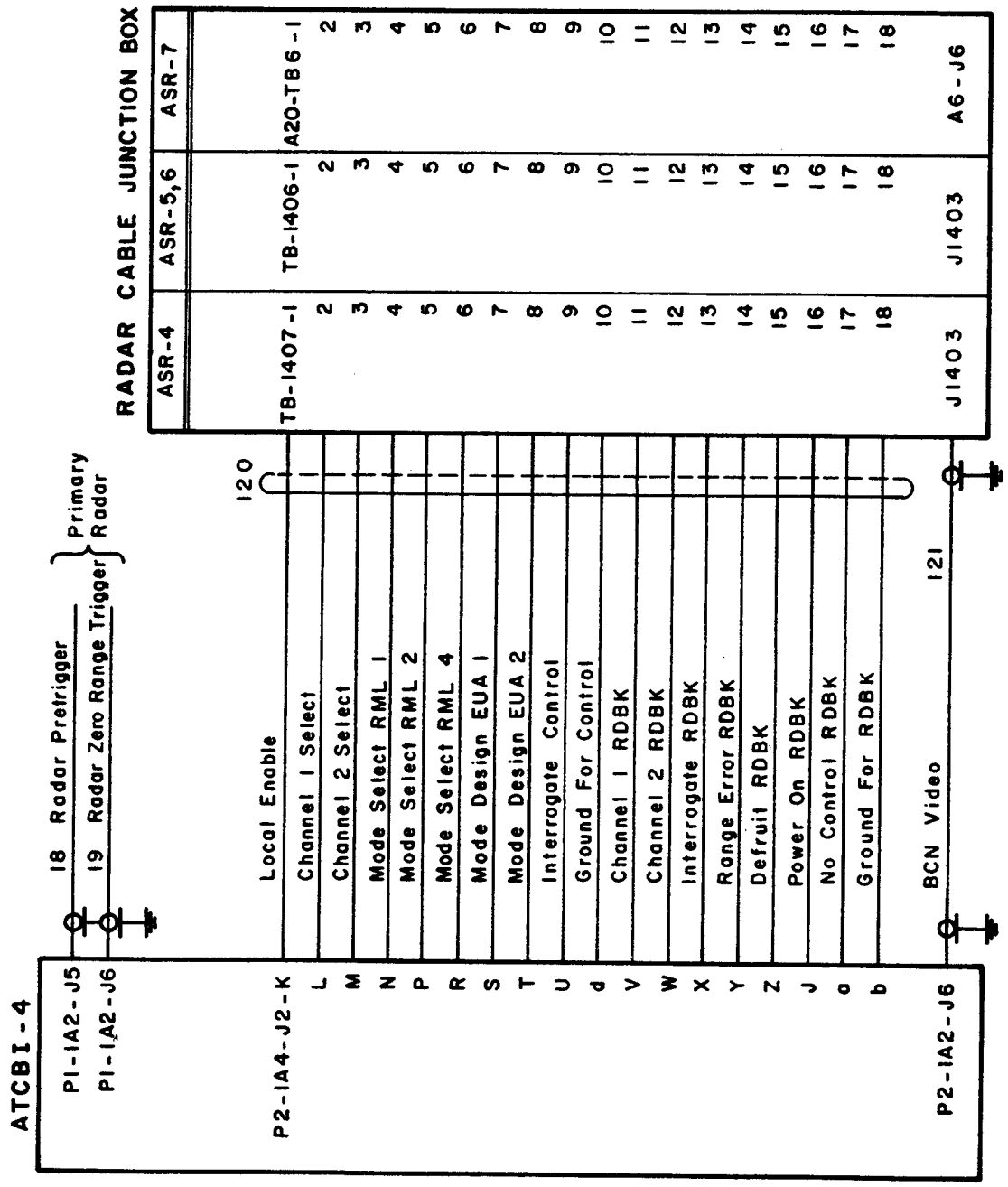

Fig. 3-2 RADAR CABLE JUNCTION BOX INTERFACE AT THE TRANSMITTER SITE (Landline Remoting)

TABLE 3-5: PRIMARY RADAR CONNECTIONS

CABLE NO.	WIRE TYPE	FROM			TO					FUNCTION
		UNIT	CONNECTOR	PIN	UNIT	CONNECTOR			PIN	
						ASR-4	ASR-5,6	ASR-7		
18	COAX 75Ω	RECEIVER/ TRANSMITTER UNIT (1A2) CHANNEL 1	P1(1A2J5) M39012/16-0002		PRIMARY RADAR (ASR-4,5,6,7)	J1408	J1408	A20J3		RADAR PRETRIGGER
						M39012/16-0002				
19			P1(1A2J6) M39012/16-0002			MODIFICATION REQUIRED				RADAR ZERO RANGE TRIGGER
121		CONTROL TRANSFER UNIT (1A4)	P2(1A4J7) M39012/16-0002		RADAR CABLE JUNCTION BOX (ASR-4,5,6,7)	J1403	J1403	A20J6		BCN VIDEO AND TRIGGERS
						M39012/16-0002				
120	AWG 20 or AWG 19		P2(1A4J2)	K		TB1407	TB1406	A20TB6	1	LOCAL ENABLE
				L					2	CHANNEL 1 SELECT
				M					3	CHANNEL 2 SELECT
				N					4	MODE SELECT RML 1
				P					5	MODE SELECT RML 2
				R					6	MODE SELECT RML 4
				S					7	MODE DESIGN EUA 1
				T					8	MODE DESIGN EUA 2
				U					9	INTERROGATE CONTROL
				d					10	GROUND FOR CONTROLS
				V					11	CHANNEL 1 RDBK
				W					12	CHANNEL 2 RDBK
				X					13	INTERROGATE RDBK
				Y					14	RANGE ERROR RDBK
				Z					15	DEFRUIT RDBK
				J					16	POWER ON RDBK
				a					17	NO CONTROL RDBK
			MS3107A28-12S	b					18	GROUND FOR RDBK

SECTION 2. INDICATOR SITE

40. ATCBI-4 REMOTE CONTROL BOX. This paragraph contains connection information relevant to the installation of the ATCBI-4 remote control box at the indicator site. The ATCBI-4 remote control box is not used in ARTS III installations. The connections between the ATCBI-4 remote control box and the radar cable junction box are illustrated in Fig. 3-3, and detailed in Table 3-6. Cable 126 carries the control and readback signals to and from the transmitter site. Cable 133 connects the remote control box to a source of AC power.

NOTE: CONNECTION INFORMATION IS PROVIDED FOR THE ASR-4, ASR-5 & 6 AND THE ASR-7, ALL ON THE SAME FIGURE (FIG. 3-3) AND TABLE (TABLE 3-6). CARE SHOULD BE EXERCISED IN USING THIS INFORMATION. OBSERVE DIODE POLARITY IN FIG. 3-4.

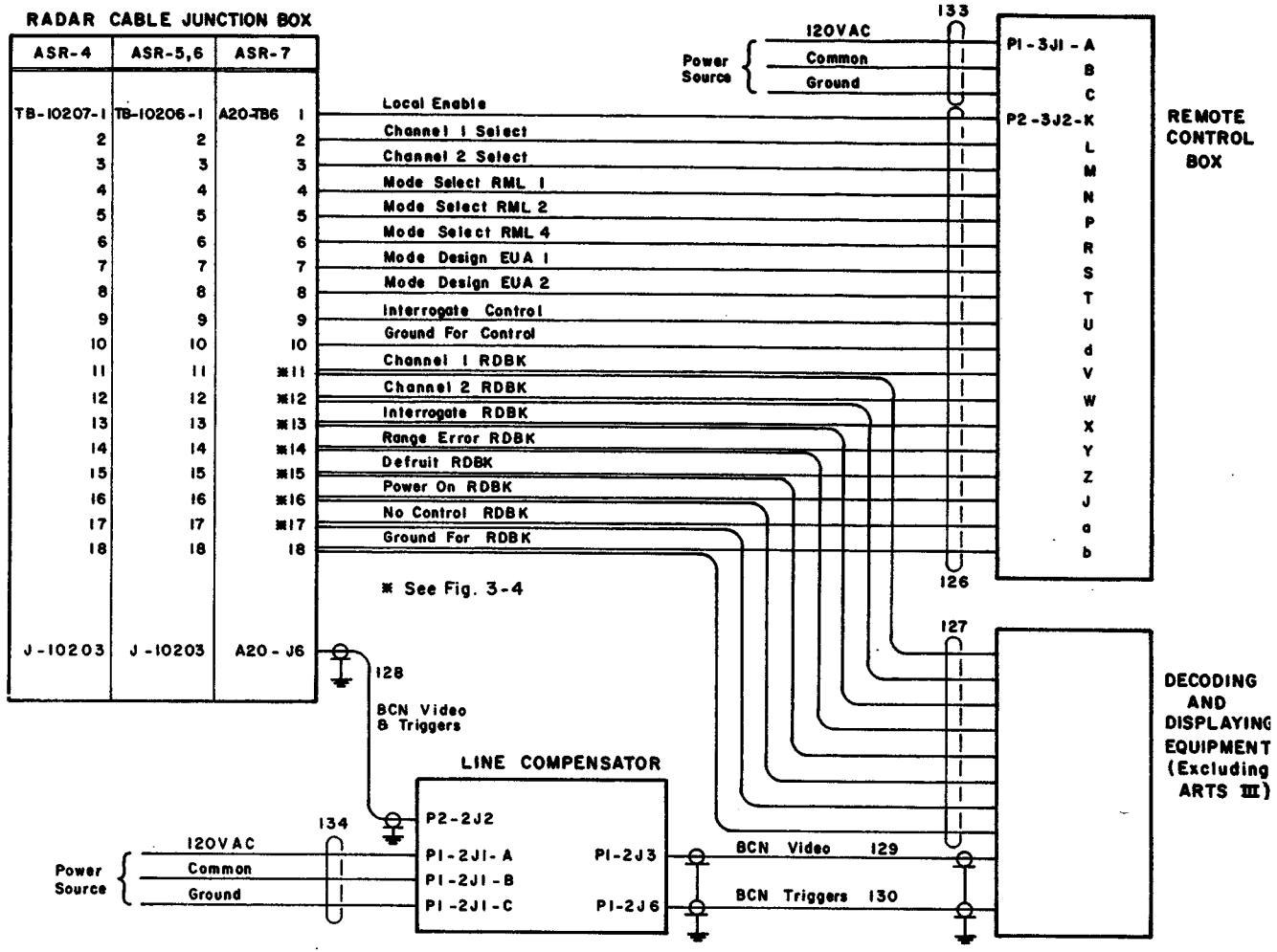

Fig. 3-3 RADAR CABLE JUNCTION BOX INTERFACE AT THE INDICATOR SITE (Landline Remoting)

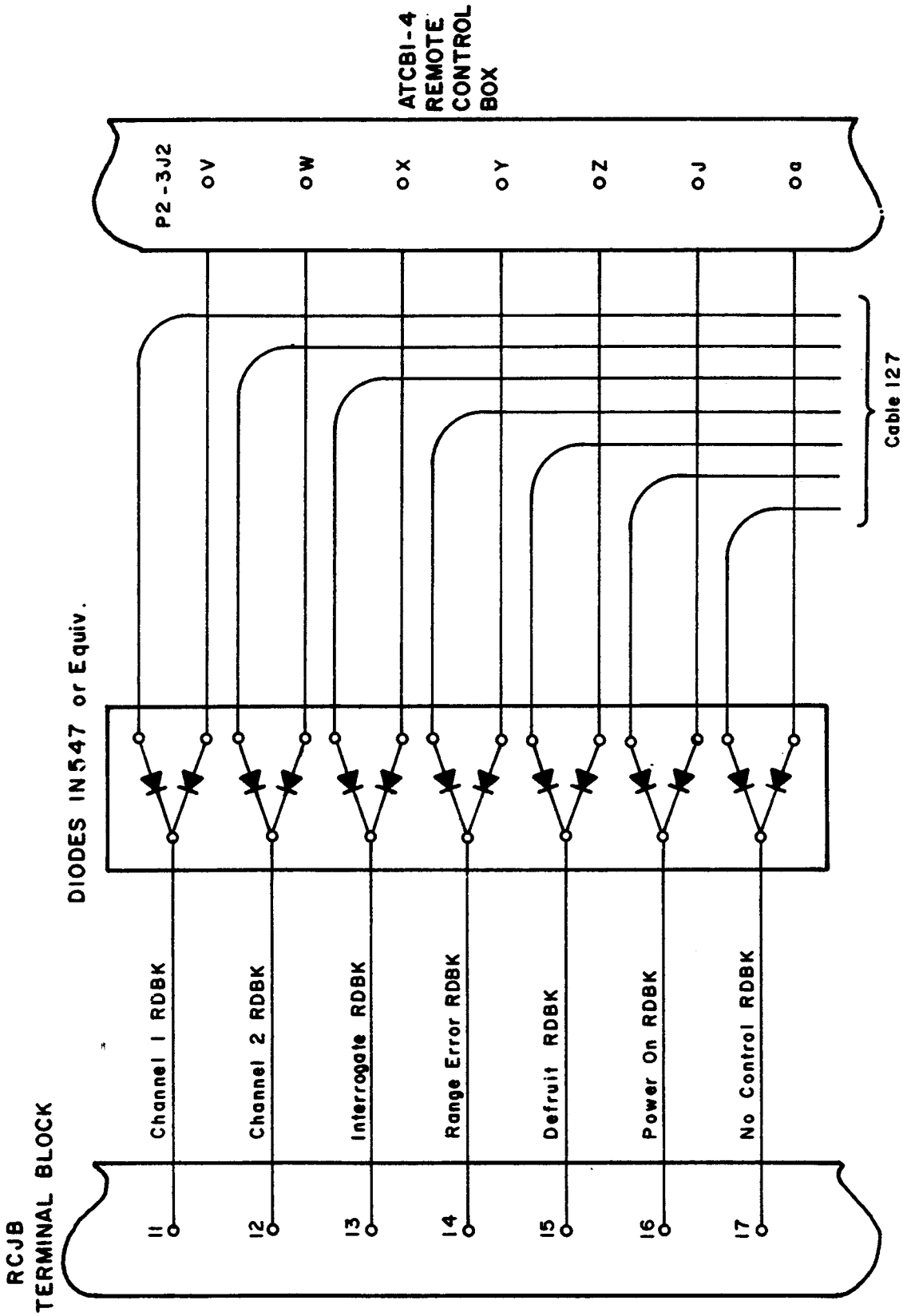

Fig. 3-4 READBACK ISOLATION - DIODE MODIFICATION

TABLE 3-6: ATCBI-4 REMOTE CONTROL BOX CONNECTION

CABLE NO.	WIRE TYPE	UNIT	CONNECTOR			PIN	TO UNIT	TO CONNECTOR	TO PIN	FUNCTION
			ASR-4	ASR-5,6	ASR-7					
126	AWG 20 or AWG 19 TEL PAIRS	RADAR CABLE JUNCTION BOX (ASR-4,5,6,7,)	TB10207	TB10206	A20TB6	1	ATCBI-4 REMOTE CONTROL BOX	P2(3J2)	K	LOCAL ENABLE
						2			L	CHANNEL 1 SELECT
						3			M	CHANNEL 2 SELECT
						4			N	MODE SELECT RML 1
						5			P	MODE SELECT RML 2
						6			R	MOBE SELECT RML 4
						7			S	MODE DESIGN EUA 1
						8			T	MODE DESIGN EUA 2
						9			U	INTERROGATE CONTROL
						10			d	GROUND FOR CONTROLS
						11			V	CHANNEL 1 RDBK
						12			W	CHANNEL 2 RDBK
						13			X	INTERROGATE RDBK
						14			Y	RANGE ERROR RDBK
						15			Z	DEFRUIT RDBK
						16			J	POWER ON RDBK
						17			a	NO CONTROL RDBK
						18			b	GROUND FOR RDBK
								MS3107A28-12S		
133	AWG 14	PRIMARY POWER SOURCE						P1(3J1)	A	120 VAC
									B	COMMON
									C	GROUND
								MS3107A22-15S		

41. ATCBI-2 INDICATOR SITE EQUIPMENT. This paragraph contains connection information relevant to the installation of the ATCBI-4 with the ATCBI-2 indicator site equipment. Connection of the ATCBI-2 indicator site equipment and the ATCBI-4 line compensation amplifier requires the fabrication of cables 127, 128, 129 and 130 as shown in Fig. 3-3. The line compensation amplifier receives the composite video and trigger signal on cable 128, and delivers the separated video and triggers to the ATCBI-2 equipment on cables 129 and 130 respectively. Readback signals for display on the ATCBI-2 control consoles are carried from the radar cable junction box by cable 127. Isolation diodes are required when the readback lines of the indicator site equipment are paralleled (see Fig. 3-4). A detailed list of these connections is provided in Table 3-7.

NOTE: CONNECTION INFORMATION IS PROVIDED FOR THE ASR-4, ASR-5 & 6 AND THE ASR-7. ALL ON THE SAME FIGURE (FIG. 3-3) and TABLE (TABLE 3-7). CARE SHOULD BE EXERCISED IN USING THIS INFORMATION. OBSERVE DIODE POLARITY IN FIG. 3-4.

TABLE 3-7: ASR-4,5,6,7/ATCBI-2 CONNECTIONS

CABLE NO.	WIRE TYPE	FROM					TO			FUNCTION
		UNIT	CONNECTOR			PIN	UNIT	CONNECTOR	PIN	
			ASR-4	ASR-5,6	ASR-7					
127	AWG 19 TEL PAIRS	RADAR CABLE JUNCTION BOX (ASR-4,5,6,7)	TB10207	TB10206	A20TB6	16 17 13 15 14 18	ATCBI-2 COMMON RACK-1	TB-5001	4 5 6 7 8 22	POWER ON RDBK NO CONTROL RDBK INTERROGATE RDBK DEFRUIT RDBK RANGE ERROR RDBK GROUND FOR RDBK
128	COAX 75Ω		J10203	J10203	A20J6		ATCBI-4 LINE COMP.(2)	P2(2J2) M39012/16-0002		BCN VIDEO AND TRIGGERS
			M39012/16-0002							
129		ATCBI-4 LINE COMP.(2)	P1(2J3) M39012/16-0002				ATCBI-2 COMMON RACK 1	J-5106 M39012/16-0002		BCN VIDEO
130			P1(2J6) M39012/16-0002					J5107 M39012/16-0002		BCN TRIGGERS
134	AWG 14		P1(2J1)			A B C	PRIMARY POWER SOURCE			120 VAC COMMON GROUND

42. ATCBI-3 INDICATOR SITE EQUIPMENT. This paragraph contains connection information relavant to the installation of the ATCBI-4 with the ATCBI-3 indicator site equipment. Connection of the ATCBI-3 indicator site equipment and the ATCBI-4 line compensation amplifier requires the fabrication of cables 127, 128, 129 and 130 as shown in Fig. 3-3. The line compensation amplifier receives the composite video and trigger signal on cable 128, and delivers the separated video and triggers to the ATCBI-3 equipment on cables 129 and 130 respectively. Readback signals for display on the ATCBI-3 control consoles are carried from the radar cable junction box by cable 127. Isolation diodes are required when the readback lines of the indicator site equipment are paralleled (see Fig. 3-4).

NOTE: CONNECTION INFORMATION IS PROVIDED FOR THE ASR-4, ASR-5 & 6 AND THE ASR-7. ALL ON THE SAME FIGURE (FIG. 3-3) AND TABLE (TABLE 3-8). CARE SHOULD BE EXERCISED IN USING THIS INFORMATION. OBSERVE DIODE POLARITY IN FIG. 3-4.

TABLE 3-8: ASR-4.5.6.7/ATCBI-3 CONNECTIONS

CABLE NO.	WIRE TYPE	FROM					TO			FUNCTION
		UNIT	CONNECTOR			PIN	UNIT	CONNECTOR	PIN	
			ASR-4	ASR-5,6	ASR-7					
127	AWG 19 TEL PAIRS	RADAR CABLE JUNCTION BOX (ASR-4,5,6,7)	TB10207	TB10206	A20TB6	16 17 13 15 14 18	ATCBI-3 COMMON RACK 1	TB-5002 E-5002	9 10 11 12 13	POWER ON RDBK NO CONTROL RDBK INTERROGATE RDBK DEFRUIT RDBK RANGE ERROR RDBK GROUND FOR RDBK
128	COAX 75Ω		J10203	J10203	A20J6		ATCBI-4 LINE COMP.(2)	P2(2J2) M39012/16-0002		BCN VIDEO AND TRIGGERS
			M39012/16-0002							
129		ATCBI-4 LINE COMP.(2)	P1(2J3) M39012/16-0002				ATCBI-3 COMMON RACK 1	J-5106 M39012/16-0002		BCN VIDEO
130			P1(2J6) M39012/16-0002					J-5107 M39012/16-0002		BCN TRIGGERS
134	AWG 14		P1(2J1)			A B C	PRIMARY POWER SOURCE			120 VAC COMMON GROUND

43. AN/TPX-42A INDICATOR SITE EQUIPMENT. This paragraph contains information relevant to the installation of the ATCBI-4 with the AN/TPX-42A indicator site equipment. Connection of the AN/TPX-42A indicator site equipment and the ATCBI-4 line compensation amplifier requires the fabrication of cables 127, 128, ~~129 and 130~~ as shown in Fig. 3-3. ~~The~~ line compensation amplifier receives the composite video and trigger signal on cable 128, and delivers the separated video and triggers to the AN/TPX-42A equipment on cables 129 and 130 respectively. Readback signals for display on the AN/TPX-42A control consoles are carried from the radar cable junction box by cable 127. Isolation diodes are required when the readback lines of the indicator site equipment are paralled (see Fig. 3-4).

NOTE: CONNECTION INFORMATION IS PROVIDED FOR THE ASR-4, ASR-5 & 6 AND THE ASR-7. ALL ON THE SAME FIGURE (FIG. 3-3) AND TABLE (TABLE 3-9). CARE SHOULD BE EXERCISED IN USING THIS INFORMATION. OBSERVE DIODE POLARITY IN FIG. 3-4.

TABLE 3-9: ASR-5,6,7/AN/TPX-42A CONNECTIONS

CABLE NO.	WIRE TYPE	FROM					TO			FUNCTION
		UNIT	CONNECTOR			PIN	UNIT	CONNECTOR	PIN	
			ASR-4	ASR-5,6	ASR-7					
127	AWG 19 TEL PAIRS	RADAR CABLE JUNCTION BOX (ASR-4,5,6,7)	TB10207	TB10206	A20TB6	17 18 11 12 18 13 18 15 18 14 18 15 18	C8626T	P1(J1) MS3126F-20-41S	e f y a a L M C D R S p q	NO CONTROL RDBK NO CONTROL RETURN CHANNEL 1 RDBK CHANNEL 2 RDBK CHANNEL RETURN INTERROGATE RDBK INTERROGATE RETURN DEFRUIT RDBK DEFRUIT RETURN RANGE ERROR RDBK RANGE ERROR RETURN DEFRUIT INDICATOR DEFRUIT RETURN
128	COAX 75 Ω		J10203	J10203	A20J6		ATCBI-4 LINE COMP.(2)	~~P2(2J2)~~ M39012/16-0002		BCN VIDEO AND TRIGGERS
			M39012/16-0002							
~~129~~		ATCBI-4 LINE COMP.(2)	P1(2J3) M39012/16-0002				CN1358/T	P11(J11) M39012/16-0002		BCN VIDEO
~~130~~			P1(2J6) M39012/16-0002					P12(J12) M39012/16-0002		BCN TRIGGERS
~~134~~	~~AWG 14~~		P1(2J1)			A B C	PRIMARY POWER SOURCE			120 VAC COMMON GROUND

44. AUTOMATED RADAR TERMINAL SYSTEM (ARTS III). This paragraph contains connection information relevant to the installation of the ATCBI-4 with the ARTS III indicator site equipment. Connections to the ARTS III junction box and the ATCBI-4 line compensation amplifier require the fabrication of cables 127, 128, 129 and 130 as shown in Fig. 3-3. The line compensation amplifier receives the composite video and triggers on cable 128, and delivers the separated video and triggers to the ARTS III junction box on cables 129 and 130 respectively. Readback signals for display on the ARTS III control consoles are carried from the radar cable junction box to the ARTS III junction box via cable 127. A detailed list of these connections is provided in Table 3-10.

Since the ATCBI-4 line compensation amplifier is used, it is necessary to by-pass the line compensator built into the ARTS III system. This is accomplished by connecting the ARTS III for RML operation.

NOTE: CONNECTION INFORMATION IS PROVIDED FOR THE ASR-4, ASR-5 & 6 AND THE ASR-7, ALL ON THE SAME FIGURE (FIG. 3-3) AND TABLE (TABLE 3-10). CARE SHOULD BE EXERCISED IN USING THIS INFORMATION.

45.-48. RESERVED.

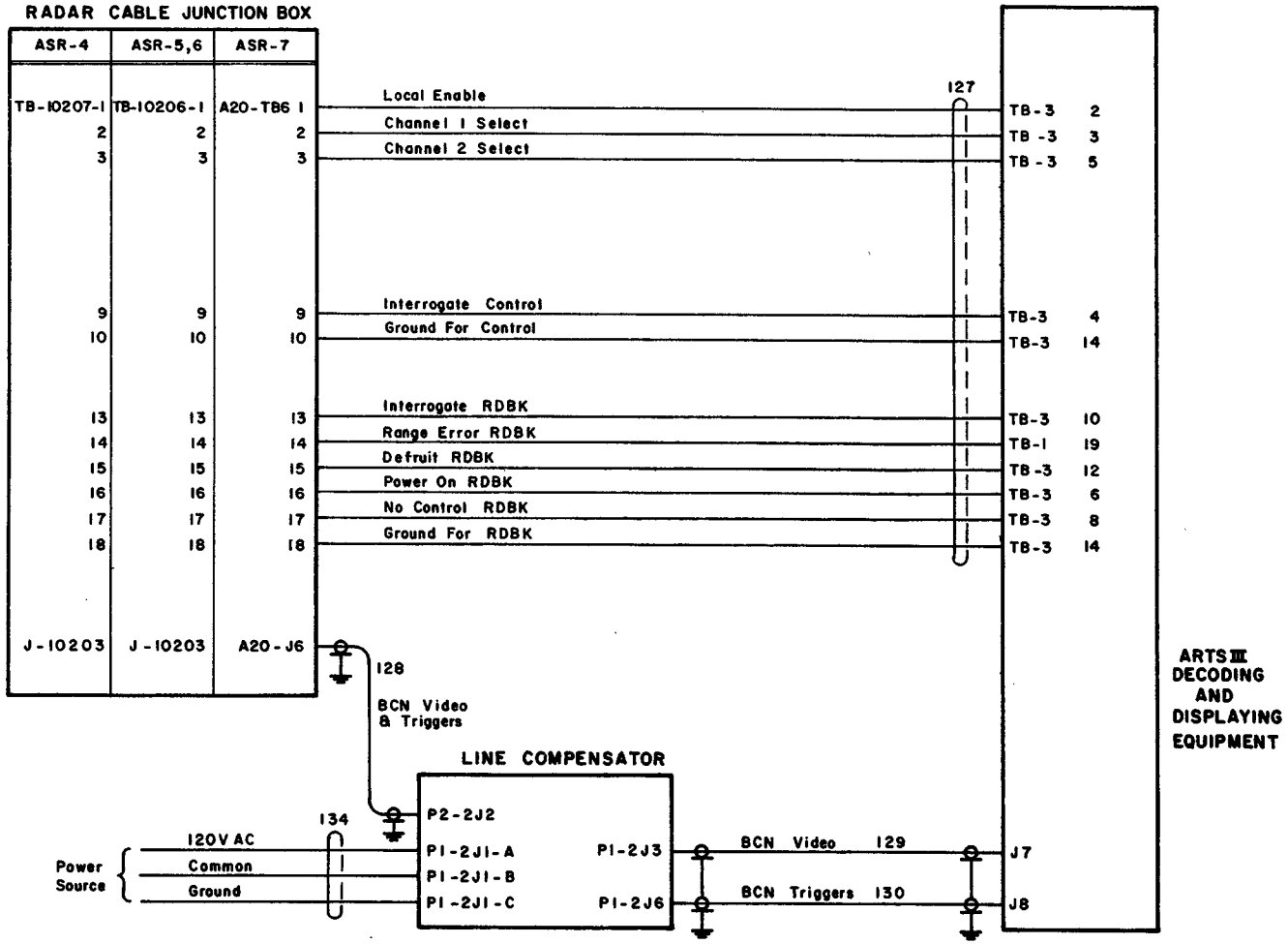

Fig. 3-5 RADAR CABLE JUNCTION BOX INTERFACE AT THE INDICATOR SITE
(Landline Remoting - ARTS III)

TABLE 3-10: ASR-4,5,6,7/ARTS III CONNECTIONS

CABLE NO.	WIRE TYPE	FROM					TO			FUNCTION
		UNIT	CONNECTOR			PIN	UNIT	CONNECTOR	PIN	
			ASR-4	ASR-5,6	ASR-7					
127	AWG 19 TEL PAIRS	RADAR CABLE JUNCTION BOX (ASR-4,5,6,7)	TB10207	TB10206	A20TB6	1	ARTS III JUNCTION BOX	TB-3	2	LOCAL ENABLE
						2		TB-3	3	CHANNEL 1 SELECT
						3		TB-3	5	CHANNEL 2 SELECT
						9		TB-3	4	INTERROGATE CONTROL
						10		TB-3	14	GROUND FOR CONTROL
						16		TB-3	6	POWER ON RDBK
						17		TB-3	8	NO CONTROL RDBK
						13		TB-3	10	INTERROGATE RDBK
						15		TB-3	12	DEFRUIT RDBK
						14		TB-1	19	RANGE ERROR RDBK
						18		TB-3	14	GROUND FOR RDBK
128	COAX 75Ω		J10203	J10203	A20J6		ATCBI-4 LINE COMP.(2)	P2(2J2) M39012/16-0002		BCN VIDEO AND TRIGGERS
			M39012/16-0002							
129		ATCBI-4 LINE COMP.(2)	P1(2J3) M39012/16-0002				ARTS III JUNCTION BOX	J7 M39012/16-0002		BCN VIDEO
130			P1(2J6) M39012/16-0002					J8 M39012/16-0002		BCN TRIGGERS
134	AWG 14		P1(2J1)			A	PRIMARY POWER SOURCE			120 VAC
						B				COMMON
						C				GROUND

CHAPTER 4. RADAR MICROWAVE LINK INSTALLATIONS

SECTION 1. RML/RCJB STANDARD INTERFACE

49. STANDARDIZATION. This paragraph contains standard connection information for the RML/RCJB interface. Terminal RML installations have been few in number and each has been treated as a special case. These pre-standard installations will remain 'AS BUILT' unless there is some need to rewire this interface. If the RML/RCJB interface is scheduled to be rewired, or a new installation is involved, the interconnection information contained in Tables 4-1 through 4-8 is to be used.

a. Transmitter Site. Connections from the radar cable junction box to the radar microwave link, at the transmitter site, require the fabrication of cables 135, 136, 137 and 138 as shown in Fig. 4-1. Cable 135 carries the control and readback signals. Note that the RML-2 and 3 do not have full readback capability. Cables 136, 137 and 138 carry beacon video, beacon sync and mode triggers, respectively. Detailed connection information is provided in Table 4-1 for the RML-2, Table 4-2 for the RML-3, Table 4-3 for the RML-4 and Table 4-4 for the RML-6.

NOTE: CONNECTION INFORMATION IS PROVIDED FOR THE ASR-4, ASR-5 & 6 AND THE ASR-7, ALL ON THE SAME FIGURE (FIG. 4-1) AND TABLES (TABLES 4-1, 4-2, 4-3 AND 4-4). CARE SHOULD BE EXERCISED IN USING THIS INFORMATION.

b. Indicator Site (RML-2, 3 & 4). Connections from the radar cable junction box to the radar microwave link (RML-2, 3 or 4), at the indicator site, requires the fabrication of cables 139, 140 and 141 as shown in Fig. 4-2(a and b). Cable 139 carries the control and readback signals. Note that the RML-2 and 3 do not have full readback capability. Cables 140 and 141 carry beacon video and combined beacon triggers, respectively. Detailed connection information is provided in Table 4-5 for the RML-2, Table 4-6 for the RML-3 and Table 4-7 for the RML-4.

NOTE: CONNECTION INFORMATION IS PROVIDED FOR THE ASR-4, ASR-5 & 6 AND THE ASR-7, ALL ON THE SAME FIGURE (FIG. 4-2(a and b)) AND TABLES (TABLES 4-5, 4-6 AND 4-7). CARE SHOULD BE EXERCISED IN USING THIS INFORMATION.

c. Indicator Site (RML-6). Connections from the radar cable junction box to the radar microwave link (RML-6) at the indicator site, requires the fabrication of cables 139, 140, 142 and 143 as shown in Fig. 4-3(a and b). Cable 139 carries the control and readback signals. Cables 140, 142 and 143 carry beacon video, beacon sync and mode triggers, respectively. Detailed connection information is provided in Table 4-8.

NOTE: CONNECTION INFORMATION IS PROVIDED FOR THE ASR-4, ASR-5 & 6 AND THE ASR-7, ALL ON THE SAME FIGURE (FIG. 4-3(a and b) AND TABLE (TABLE 4-8). CARE SHOULD BE EXERCISED IN USING THIS INFORMATION.

50.-52. RESERVED.

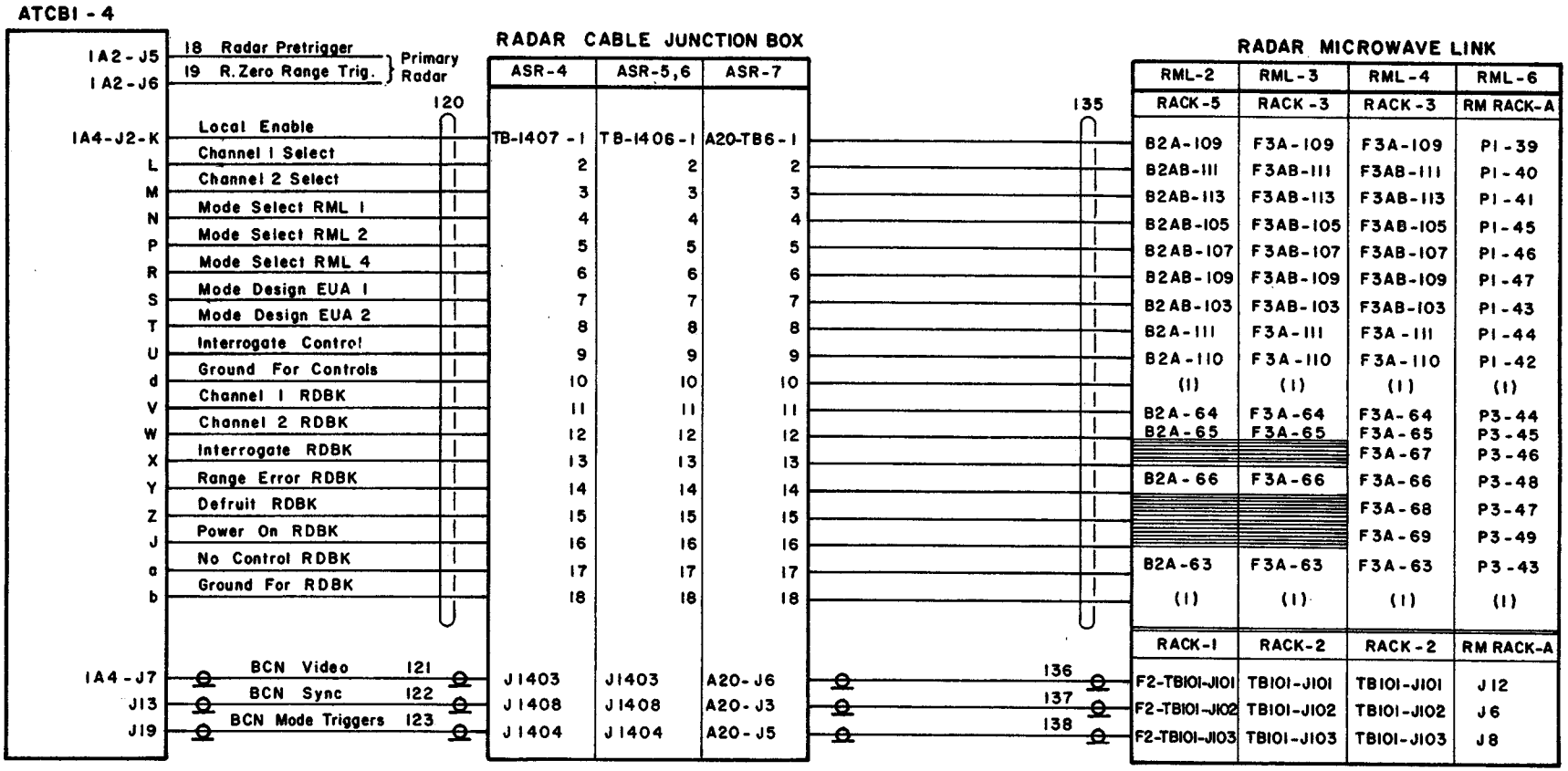

Fig. 4-1 RADAR CABLE JUNCTION BOX INTERFACES AT THE TRANSMITTER SITE (RML Remoting)

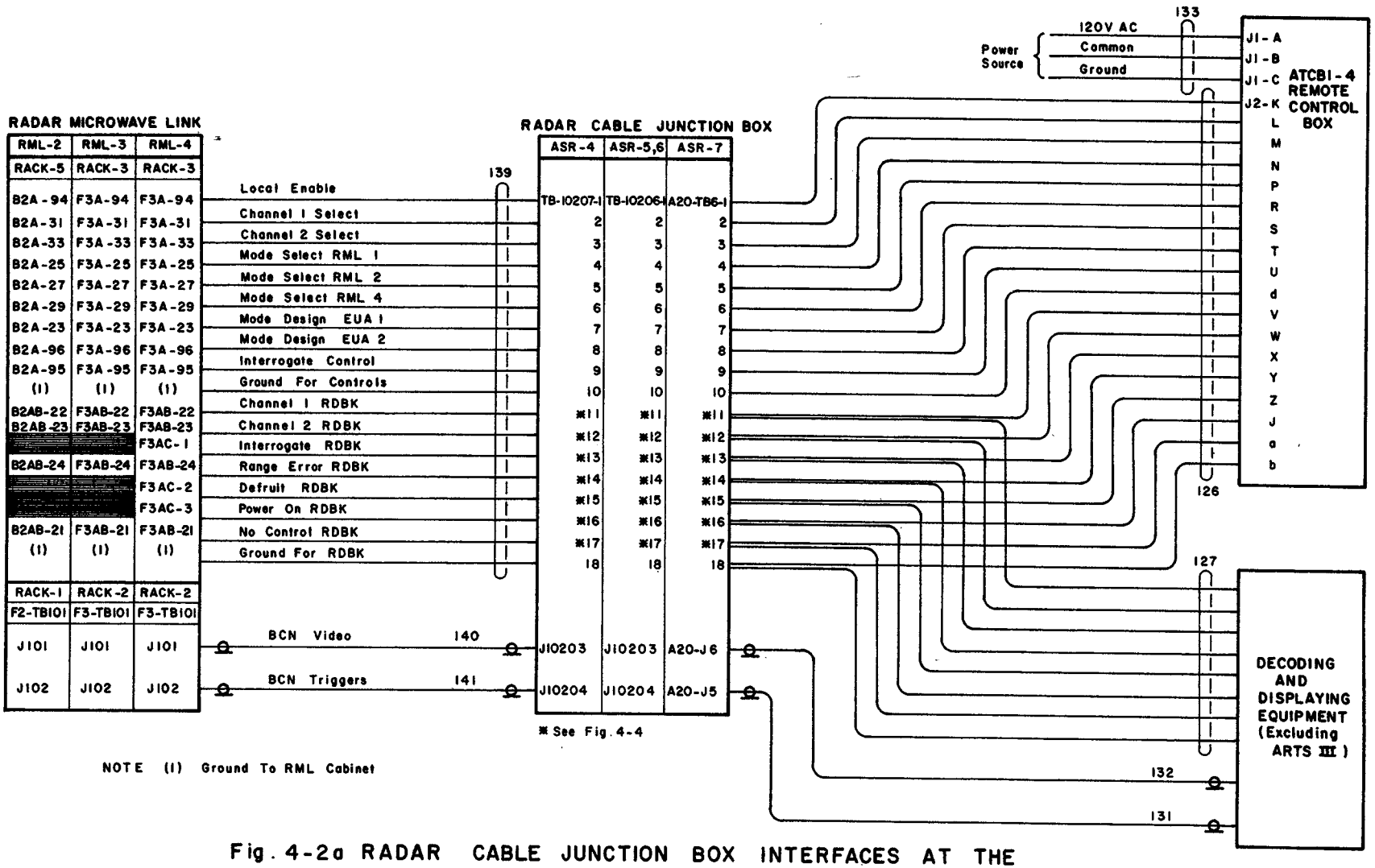

Fig. 4-2a RADAR CABLE JUNCTION BOX INTERFACES AT THE INDICATOR SITE (RML Remoting - Excluding ARTS III)

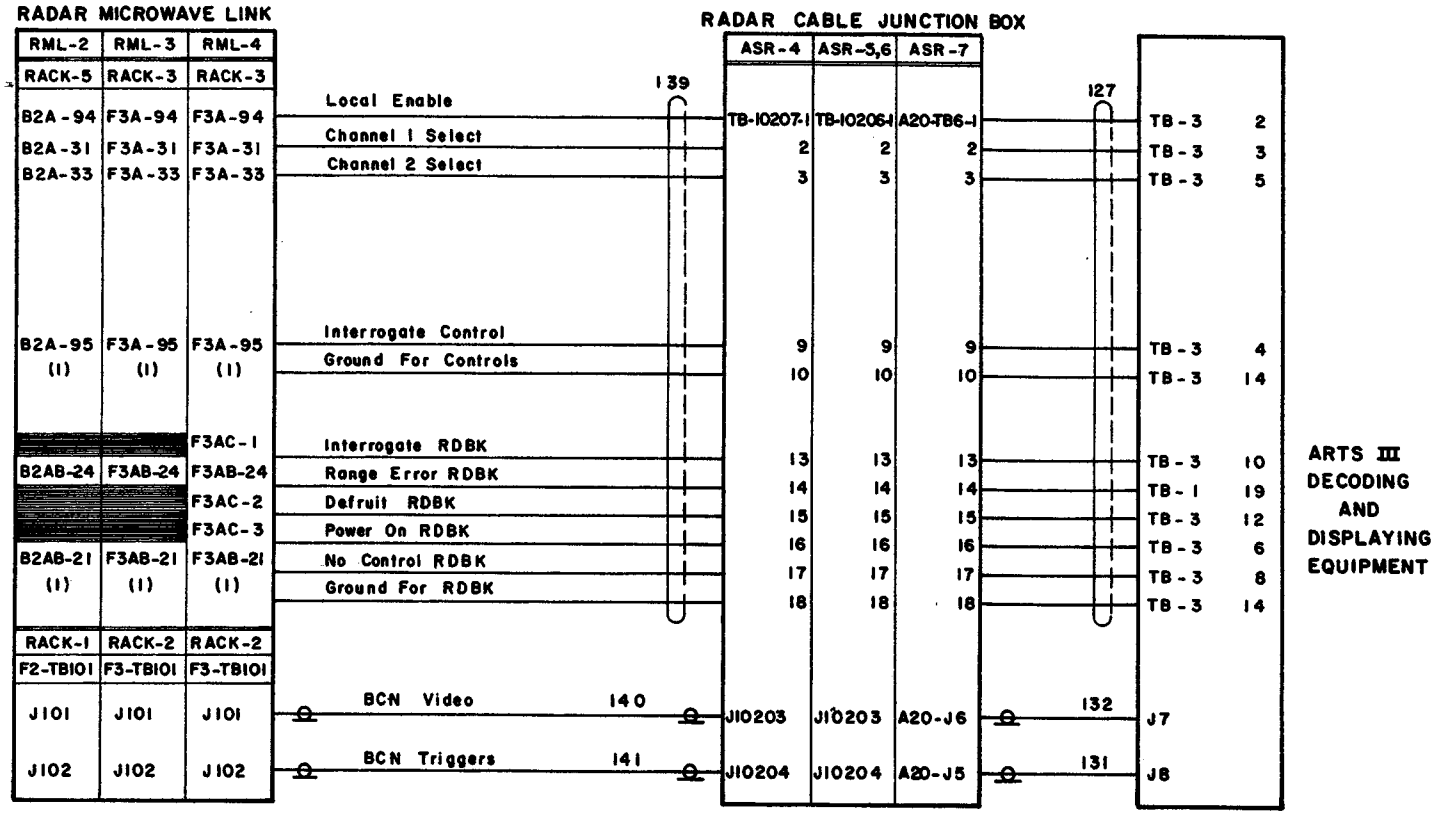

NOTE (1) Ground To RML Cabinet

Fig. 4-2b RADAR CABLE JUNCTION BOX INTERFACES AT THE INDICATOR SITE (RML Remoting - ARTS III)

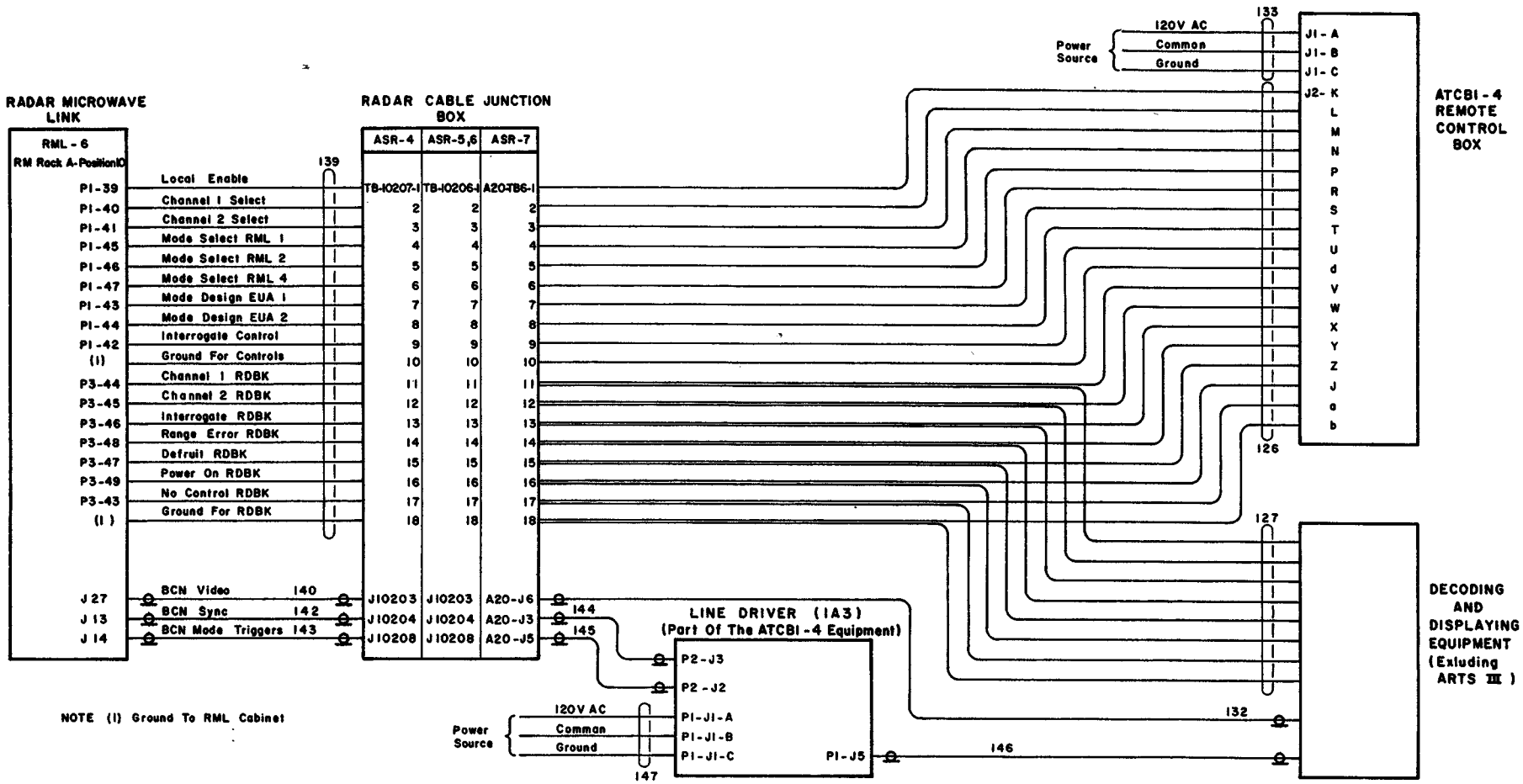

Fig. 4-3a RADAR CABLE JUNCTION BOX INTERFACES AT THE INDICATOR SITE (RML-6 Remoting-Excluding ARTS III)

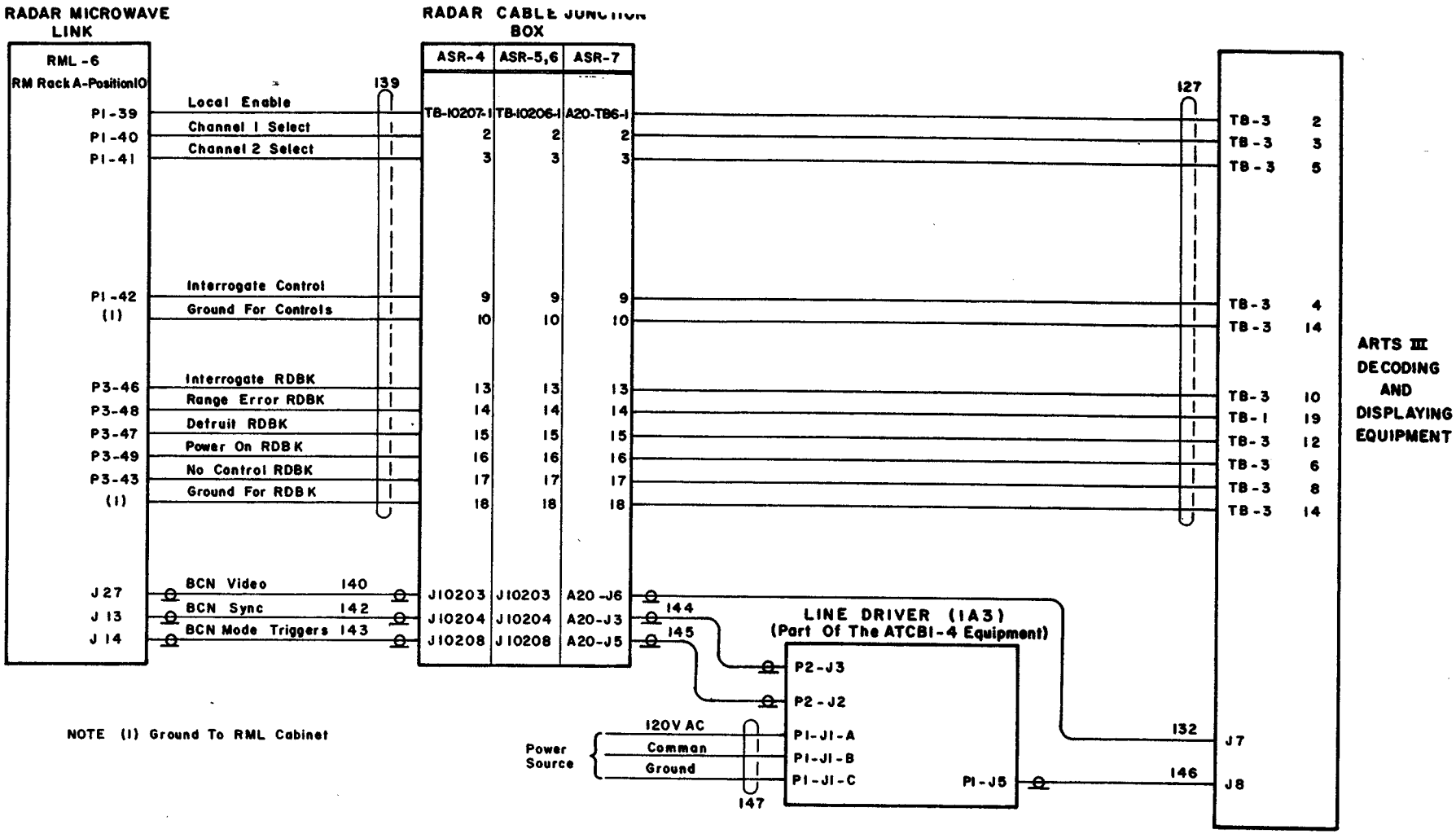

Fig. 4-3b RADAR CABLE JUNCTION BOX INTERFACES AT THE INDICATOR SITE (RML-6 Remoting - ARTS III)

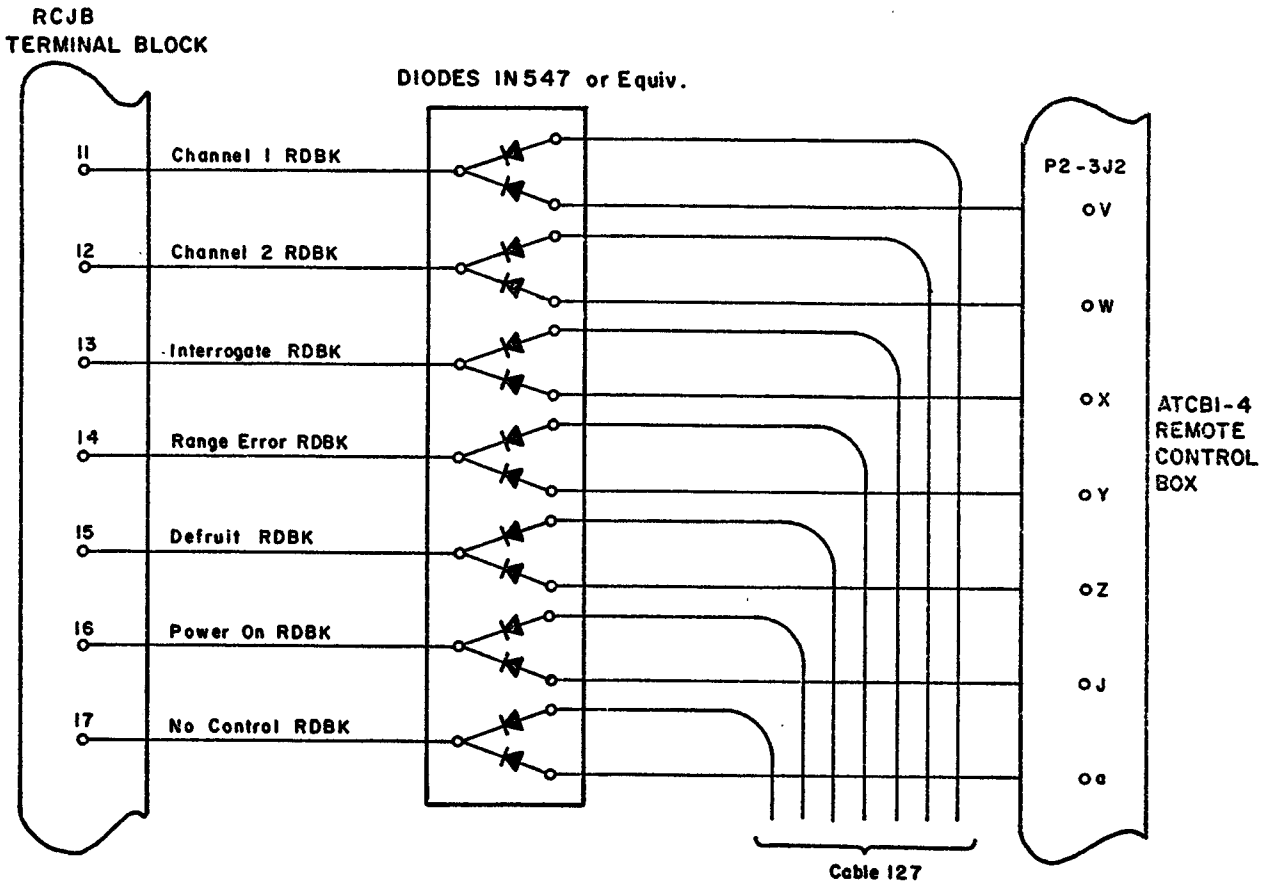

Fig. 4-4 READBACK ISOLATION - DIODE MODIFICATION

TABLE 4-1: ASR-4,5,6,7/RML-2 CONNECTIONS

CABLE NO.	WIRE TYPE	FROM					TO			FUNCTION
		UNIT	CONNECTOR			PIN	UNIT	CONNECTOR	PIN	
			ASR-4	ASR-5,6	ASR-7					
135	AWG 20 OR AWG 19 TEL PAIRS	RADAR CABLE JUNCTION BOX (ASR-4,5,6,7)	TB1407	TB1406	A20TB6	1	RML-2 RACK-5	B2A	109	LOCAL ENABLE
						2		B2AB	111	CHANNEL 1 SELECT
						3		B2AB	113	CHANNEL 2 SELECT
						4		B2AB	105	MODE SELECT RML 1
						5		B2AB	107	MODE SELECT RML 2
						6		B2AB	109	MODE SELECT RML 4
						7		B2AB	103	MODE DESIGN EUA 1
						8		B2A	111	MODE DESIGN EUA 2
						9		B2A	110	INTERROGATE CONTROL
						10				GROUND FOR CONTROLS
						11		B2A	64	CHANNEL 1 RDBK
						12		B2A	65	CHANNEL 2 RDBK
						14		B2A	66	RANGE ERROR RDBK
						17		B2A	63	NO CONTROL RDBK
						18				GROUND FOR RDBK
136	COAX 75Ω		J1403 M39012/16-0002	J1403 M39012/16-0002	A20J6		RML-2 RACK-1	F2-TB101-J101 M39012/16-0002		BCN VIDEO
137			J1408 M39012/16-0002	J1408 M39012/16-0002	A20J3			F2-TB101-J102 M39012/16-0002		BCN SYNC
138			J1404 M39012/16-0002	J1404 M39012/16-0002	A20J5			F2-TB101-J103 M39012/16-0002		BCN MODE TRIGGERS

TABLE 4-2: ASR-4,5,6,7/RML-3 CONNECTIONS

CABLE NO.	WIRE TYPE	FROM					TO			FUNCTION
		UNIT	CONNECTOR			PIN	UNIT	CONNECTOR	PIN	
			ASR-4	ASR-5,6	ASR-7					
135	AWG 20 OR AWG 19 TEL PAIRS	RADAR CABLE JUNCTION BOX (ASR-4,5,6,7)	TB1407	TB1406	A20TB6	1	RML-3 RACK-3	F3A	109	LOCAL ENABLE
						2		F3AB	111	CHANNEL 1 SELECT
						3		F3AB	113	CHANNEL 2 SELECT
						4		F3AB	105	MODE SELECT RML 1
						5		F3AB	107	MODE SELECT RML 2
						6		F3AB	109	MODE SELECT RML 4
						7		F3AB	103	MODE DESIGN EUA 1
						8		F3A	111	MODE DESIGN EUA 3
						9		F3A	110	INTERROGATE CONTROL
						10				GROUND FOR CONTROLS
						11		F3A	64	CHANNEL 1 RDBK
						12		F3A	65	CHANNEL 2 RDBK
						14		F3A	66	RANGE ERROR RDBK
						17		F3A	63	NO CONTROL RDBK
						18				GROUND FOR RDBK
136	COAX 75Ω		J1403	J1403	A20J6		RML-3 RACK-2	TB101-J101 M39012/16-0002		BCN VIDEO
			M39012/16-0002							
137			J1408	J1408	A20J3			TB101-J102 M39012/16-0002		BCN SYNC
			M39012/16-0002							
138			J1404	J1404	A20J5			TB101-J103 M39012/16-0002		BCN MODE TRIGGERS
			M39012/16-0002							

TABLE 4-3: ASR-4,5,6,7/RML-4 CONNECTIONS

CABLE NO.	WIRE TYPE	FROM					TO			FUNCTION
		UNIT	CONNECTOR			PIN	UNIT	CONNECTOR	PIN	
			ASR-4	ASR-5,6	ASR-7					
135	AWG 20 OR AWG 19 TEL PAIRS	RADAR CABLE JUNCTION BOX (ASR-4,5,6,7)	TB1407	TB1406	A20TB6		RML-4 RACK-3			
						1		F3A	109	LOCAL ENABLE
						2		F3AB	111	CHANNEL 1 SELECT
						3		F3AB	113	CHANNEL 2 SELECT
						4		F3AB	105	MODE SELECT RML 1
						5		F3AB	107	MODE SELECT RML 2
						6		F3AB	109	MODE SELECT RML 4
						7		F3AB	103	MODE DESIGN EUA 1
						8		F3A	111	MODE DESIGN EUA 2
						9		F3A	110	INTERROGATE CONTROL
						10				GROUND FOR CONTROLS
						11		F3A	64	CHANNEL 1 RDBK
						12		F3A	65	CHANNEL 2 RDBK
						13		F3A	67	INTERROGATE RDBK
						14		F3A	66	RANGE ERROR RDBK
						15		F3A	68	DEFRUIT RDBK
						16		F3A	69	POWER ON RDBK
						17		F3A	63	NO CONTROL RDBK
						18				GROUND FOR RDBK
136	COAX 75Ω		J1403	J1403	A20J6		RML-4 RACK-2	TB101-J101 M39012/16-0002		BCN VIDEO
			M39012/16-0002							
137			J1408	J1408	A20J3			TB101-J102 M39012/16-0002		BCN SYNC
			M39012/16-0002							
138			J1404	J1404	A20J5			TB101-J103 M39012/16-0002		BCN MODE TRIGGERS
			M39012/16-0002							

TABLE 4-4: ASR-4,5,6,7/RML-6 CONNECTIONS

CABLE NO.	WIRE TYPE	FROM					TO			FUNCTION
		UNIT	CONNECTOR			PIN	UNIT	CONNECTOR	PIN	
			ASR-4	ASR-5,6	ASR-7					
135	AWG 20 OR AWG 19 TEL PAIRS	RADAR CABLE JUNCTION BOX (ASR-4,5,6,7)	TB1407	TB1406	A20TB6	1	RML-6 RM RACK A POSITION 10	P1	39	LOCAL ENABLE
						2		P1	40	CHANNEL 1 SELECT
						3		P1	41	CHANNEL 2 SELECT
						4		P1	45	MODE SELECT RML 1
						5		P1	46	MODE SELECT RML 2
						6		P1	47	MODE SELECT RML 4
						7		P1	43	MODE DESIGN EUA 1
						8		P1	44	MODE DESIGN EUA 2
						9		P1	42	INTERROGATE CONTROL
						10				GROUND FOR CONTROLS
						11		P3	44	CHANNEL 1 RDBK
						12		P3	45	CHANNEL 2 RDBK
						13		P3	46	INTERROGATE RDBK
						14		P3	48	RANGE ERROR RDBK
						15		P3	47	DEFRUIT RDBK
						16		P3	49	POWER ON RDBK
						17		P3	43	NO CONTROL RDBK
						18				GROUND FOR RDBK
136	COAX 75Ω		J1403 M39012/16-0002	J1403 M39012/16-0002	A20J6			J12 M39012/16-0002		BCN VIDEO
137			J1408 M39012/16-0002	J1408 M39012/16-0002	A20J3			J6 M39012/16-0002		BCN SYNC
138			J1404 M39012/16-0002	J1404 M39012/16-0002	A20J5			J8 M39012/16-0002		BCN MODE TRIGGERS

TABLE 4-5: RML-2/ASR-4,5,6,7 CONNECTIONS

CABLE NO.	WIRE TYPE	FROM			TO					FUNCTION
		UNIT	CONNECTOR	PIN	UNIT	CONNECTOR			PIN	
139		RML-2 RACK-5			RADAR CABLE JUNCTION BOX (ASR-5,6,7)	ASR-4	ASR-5,6	ASR-7		
	AWG 20 or AWG 19 TEL PAIRS		B2A	94		TB10207	TB10206	A20TB6	1	LOCAL ENABLE
				31					2	CHANNEL 1 SELECT
				33					3	CHANNEL 2 SELECT
				25					4	MODE SELECT RML 1
				27					5	MODE SELECT RML 2
				29					6	MODE SELECT RML 4
				23					7	MODE DESIGN EUA 1
				96					8	MODE DESIGN EUA 2
				95					9	INTERROGATE CONTROL
									10	GROUND FOR CONTROLS
			B2AB	22					11	CHANNEL 1 RDBK
				23					12	CHANNEL 2 RDBK
				24					14	RANGE ERROR RDBK
				21					17	NO CONTROL RDBK
									18	GROUND FOR RDBK
140	COAX 75Ω	RML-2 RACK-1	F2-TB101-J101 M39012/16-0002			J10203	J10203 M39012/16-0002	A20J6		BCN VIDEO
141			F2-TB101-J102 M39012/16-0002			J10204	J10204 M39012/16-0002	A20J5		BCN TRIGGERS

TABLE 4-6: RML-3/ASR-4,5,6,7 CONNECTIONS

CABLE NO.	WIRE TYPE	FROM			TO					FUNCTION
		UNIT	CONNECTOR	PIN	UNIT	CONNECTOR			PIN	
						ASR-4	ASR-5,6	ASR-7		
139	AWG 20 or AWG 19 TEL PAIRS	RML-3 RACK-3	F3A	94	RADAR CABLE JUNCTION BOX (ASR-4,5,6,7,)	TB10207	TB10206	A20TB6	1	LOCAL ENABLE
			F3A	31					2	CHANNEL 1 SELECT
			F3A	33					3	CHANNEL 2 SELECT
			F3A	25					4	MODE SELECT RML 1
			F3A	27					5	MODE SELECT RML 2
			F3A	29					6	MODE SELECT RML 4
			F3A	23					7	MODE DESIGN EUA 1
			F3A	96					8	MODE DESIGN EUA 2
			F3A	95					9	INTERROGATE CONTROL
			F3AB	22					10	GROUND FOR CONTROLS
			F3AB	23					11	CHANNEL 1 RDBK
			F3AB	24					12	CHANNEL 2 RDBK
			F3AB	21					14	RANGE ERROR RDBK
									17	NO CONTROL RDBK
									18	GROUND FOR RDBK
140	COAX 75Ω	RML-3 RACK-2	F3-TB101-J101 M39012/16-0002			J10203	J10203	A20J6		BCN VIDEO
						M39012/16-0002				
141			F3-TB101-J102 M39012/16-0002			J10204	J10204	A20J5		BCN TRIGGERS
						M39012/16-0002				

TABLE 4-7: RML-4/ASR-4,5,6,7 CONNECTIONS

CABLE NO.	WIRE TYPE	FROM			TO					FUNCTION
		UNIT	CONNECTOR	PIN	UNIT	CONNECTOR			PIN	
						ASR-4	ASR-5,6	ASR-7		
139	AWG 20 or AWG 19 TEL PAIRS	RML-4 RACK-3	F3A	94	RADAR CABLE JUNCTION BOX (ASR-4,5,6,7)	TB10207	TB10206	A20TB6	1	LOCAL ENABLE
			F3A	31					2	CHANNEL 1 SELECT
			F3A	33					3	CHANNEL 2 SELECT
			F3A	25					4	MODE SELECT RML 1
			F3A	27					5	MODE SELECT RML 2
			F3A	29					6	MODE SELECT RML 4
			F3A	23					7	MODE DESIGN EUA 1
			F3A	96					8	MODE DESIGN EUA 2
			F3A	95					9	INTERROGATE CONTROL
			F3AB	22					10	GROUND FOR CONTROLS
			F3AB	23					11	CHANNEL 1 RDBK
			F3AC	1					12	CHANNEL 2 RDBK
			F3AB	24					13	INTERROGATE RDBK
			F3AC	2					14	RANGE ERROR RDBK
			F3AC	3					15	DEFRUIT RDBK
			F3AB	21					16	POWER ON RDBK
									17	NO CONTROL RDBK
									18	GROUND FOR RDBK
140	COAX 75Ω	RML-4 RACK-2	F3-TB101-J101 M39012/16-0002			J10203	J10203 M39012/16-0002	A20J6		BCN VIDEO
141			F3-TB101-J102 M39012/16-0002			J10204	J10204 M39012/16-0002	A20J5		BCN TRIGGERS

TABLE 4-8: RML-6/ASR-4,5,6,7 CONNECTIONS

CABLE NO.	WIRE TYPE	FROM			TO					FUNCTION
		UNIT	CONNECTOR	PIN	UNIT	CONNECTOR			PIN	
						ASR-4	ASR-5,6	ASR-7		
139	AWG 20 or AWG 19 TEL PAIRS	RML-6 RM RACK A POSITION 10	P1	39	RADAR CABLE JUNCTION BOX (ASR-4,5,6,7)	TB10207	TB10206	A20TB6	1	LOCAL ENABLE
			P1	40					2	CHANNEL 1 SELECT
			P1	41					3	CHANNEL 2 SELECT
			P1	45					4	MODE SELECT RML 1
			P1	46					5	MODE SELECT RML 2
			P1	47					6	MODE SELECT RML 4
			P1	43					7	MODE DESIGN EUA 1
			P1	44					8	MODE DESIGN EUA 2
			P1	42					9	INTERROGATE CONTROL
			P3	44					10	GROUND FOR CONTROLS
			P3	45					11	CHANNEL 1 RDBK
			P3	46					12	CHANNEL 2 RDBK
			P3	48					13	INTERROGATE RDBK
			P3	47					14	RANGE ERROR RDBK
			P3	49					15	DEFRUIT RDBK
			P3	43					16	POWER ON RDBK
									17	NO CONTROL RDBK
									18	GROUND FOR RDBK
140	COAX 75Ω		J27 M39012/16-0002			J10203	J10203	A20J6		BCN VIDEO
						M39012/16-0002				
142			J13 M39012/16-0002			J10204	J10204	A20J3		BCN SYNC
						M39012/16-0002				
143			J14 M39012/16-0002			J10208	J10208	A20J5		BCN MODE TRIGGERS
						M39012/16-0002				

SECTION 2. TRANSMITTER SITE

53. COMMON CONNECTIONS. The common connections must be made at any and all ATCBI-4 installations. These connections are illustrated in Fig. 4-5 and presented in detail in Table 4-9. Thirty-seven cables are used to interconnect the various units at the transmitter site. Pre-fabricated cables are provided for inter-rack wiring while bulk cable and connectors are provided for on-site fabrication of intra-rack wiring. The two racks housing Channels 1 and 2 of the ATCBI-4 can be separated by as much as 1000 feet to suit installation requirements. The cable numbers and descriptions are in agreement with those in Fig. 12-1 of the ATCBI-4 technical manual. Where the cable descriptions did not remain the same, new cable numbers were assigned.

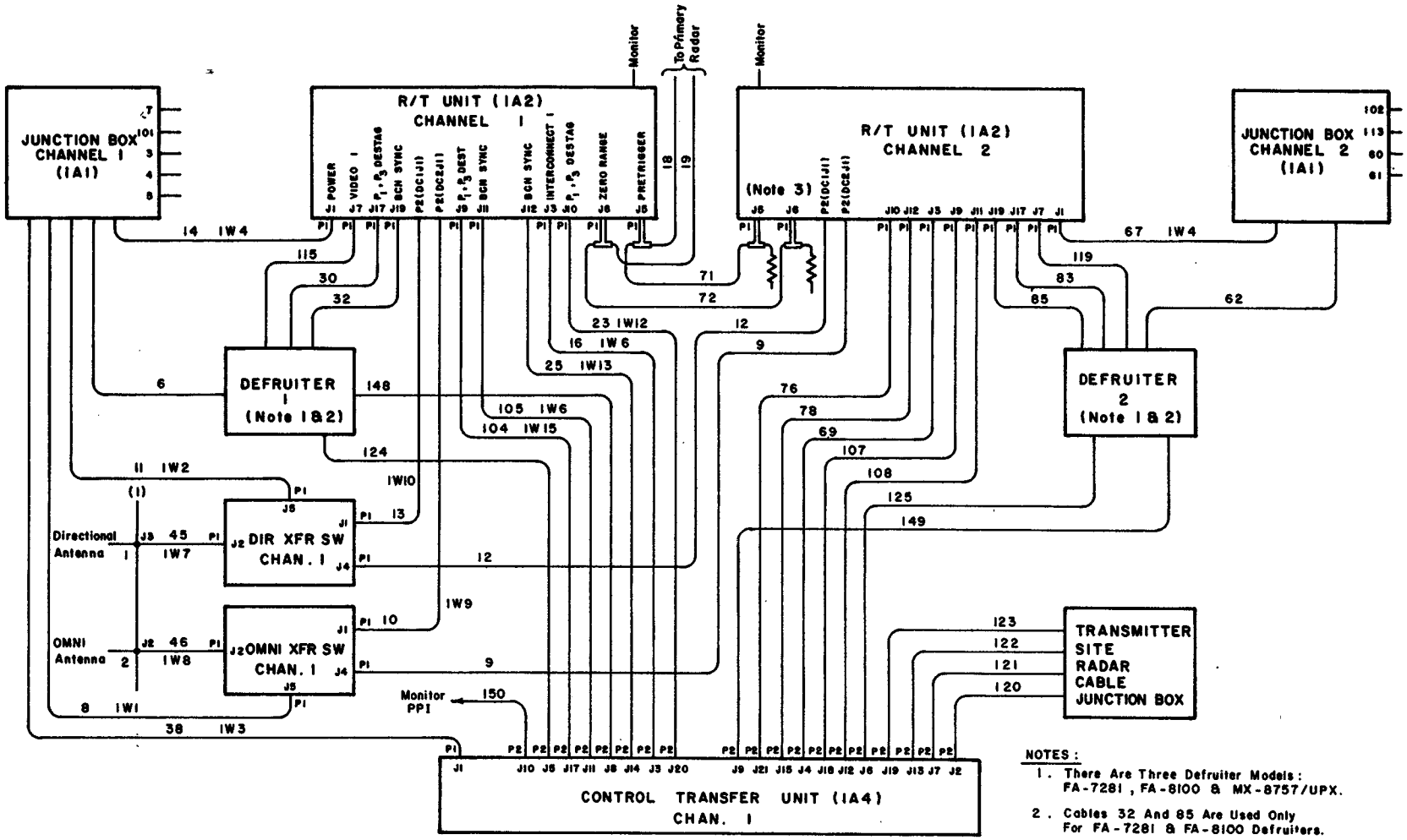

NOTES:

1. There Are Three Defruiter Models: FA-7281, FA-8100 & MX-8757/UPX.
2. Cables 32 And 85 Are Used Only For FA-7281 & FA-8100 Defruiters.
3. J5 And J6 Are Terminated With 75Ω Resistors.

Fig. 4-5 ATCBI-4 TRANSMITTER SITE CONNECTIONS - RML REMOTING

TABLE 4-9: ATCBI-4 COMMON CONNECTIONS

CABLE NO.	WIRE TYPE	FROM			TO			FUNCTION
		UNIT	CONNECTOR	PIN	UNIT	CONNECTOR	PIN	
1	COAX 50Ω	RACK ASSEMBLY (1) CHANNEL 1	P1(1J3) UG-59E/U		DIRECTIONAL ANTENNA			DIRECTIONAL RF
2			P1(1J2) UG-59E/U		OMNI-DIRECTIONAL ANTENNA			OMNI RF
3	AWG 14	JUNCTION BOX (1A1) CHANNEL 1	1A1TB1 1A1TB1 1A1E1	1 2	PRIMARY POWER SOURCE			120 VAC 120 VAC COMMON GROUND
4			1A1TB2 1A1TB2 1A1E3	4 [illegible]	POWER SOURCE CONVENIENCE OUTLET			120 VAC 120 VAC COMMON GROUND

TABLE 4-9: ATCBI-4 COMMON CONNECTIONS (Cont'd.)

CABLE NO.	WIRE TYPE	FROM			TO			FUNCTION
		UNIT	CONNECTOR	PIN	UNIT	CONNECTOR	PIN	
5	AWG 16	JUNCTION BOX (1A1) CHANNEL 1	1A1TB1 1A1TB3	4 1	NO CONTROL IND. CHANNEL 1			NO CONTROL IND. 120 VAC
7			1A1TB2 1A1TB1 1A1E2	3 9	PRIMARY POWER SOURCE			120 VAC 120 VAC COMMON GROUND
8	AWG 20	OMNI TRANSFER SWITCH (1S2) CHANNEL 1	P1(1S2J5) MS3116F10-6S	A B C	JUNCTION BOX (1A1) CHANNEL 1	1A1TB3 1A1TB3 1A1TB2	2 3 7	+48 VDC ON LINE GROUND
9	COAX 50Ω		P1(1S2J4) M39012/01-0002		OMNI MONITOR PROBE (1A2DC2) CHANNEL 2	P2(1A2DC2J1) M39012/01-0002		CHANNEL 2 OMNI RF

TABLE 4-9: ATCBI-4 COMMON CONNECTIONS (Cont'd.)

CABLE NO.	WIRE TYPE	FROM			TO			FUNCTION
		UNIT	CONNECTOR	PIN	UNIT	CONNECTOR	PIN	
10	COAX 50Ω	OMNI TRANSFER SWITCH (1S2) CHANNEL 1	P1(1S2J1) M39012/01-0002		OMNI MONITOR PROBE (1A2DC2)	P2(1A2DC2J1) M39012/01-0002		CHANNEL 1 OMNI RF
11	AWG 20	DIRECTIONAL TRANSFER SWITCH (1S1) CHANNEL 1	P1(1SJ5) MS3116F10-6S	A B C	JUNCTION BOX (1A1) CHANNEL 1	1A1TB3 1A1TB3 1A1TB2	2 3 8	+48 VDC ON LINE GROUND
12	COAX 50Ω		P1(1S1J4) M39012/01-0002		DIRECTIONAL MONITOR PROBE (1A2DC1) CHANNEL 2	P2(1A2DC1J1) M39012/01-0002		CHANNEL 2 DIRECTIONAL RF
13			P1(1S1J1) M39012/01-0002		DIRECTIONAL MONITOR PROBE (1A2DC1) CHANNEL 1	P2(1A2DC1J1) M39012/01-0002		CHANNEL 1 DIRECTIONAL RF

TABLE 4-9: ATCBI-4 COMMON CONNECTIONS (Cont'd.)

CABLE NO.	WIRE TYPE	FROM			TO			FUNCTION
		UNIT	CONNECTOR	PIN	UNIT	CONNECTOR	PIN	
14		RECEIVER/ TRANSMITTER UNIT (1A2) CHANNEL 1			JUNCTION BOX (1A1) CHANNEL 1			
	AWG 16		P1(1A2J1)	A		1A1TB2	7	GROUND
				B		1A1TB3	1	NO CONTROL INDICATOR
				C		1A1TB3	2	TRANS SW +48 VDC
				D		1A1TB3	3	ON LINE
				E		1A1TB3	4	DEFRUITER ON RDBK
				F		1A1TB3	5	DEFRUITER ON
				G		1A1TB3	6	DEFRUITER NO CONTROL
				H		1A1TB3	7	DEFRUITER GROUND
				J		1A1TB1	5	NO CONTROL RET
				K		1A1TB3	8	SPARE
				N		1A1TB2	1	AC HOT
				P		1A1TB1	7	AC COM
			M3106A22-19S					
15					MONITOR 1			
			P1(1A2J2)	H				RESET
				J				RANGE ERROR INHIBIT
				K				ON LINE
				L				INTERROGATE ENABLE
				M				HI-VOLTAGE ENABLE
				N				HI-VOLTAGE ENABLE
				P				GROUND
			M3106A22-19P					

TABLE 4-9: ATCBI-4 COMMON CONNECTIONS (Cont'd.)

CABLE NO.	WIRE TYPE	FROM			TO			FUNCTION
		UNIT	CONNECTOR	PIN	UNIT	CONNECTOR	PIN	
16	AWG 20 or AWG 19 TEL PAIRS	RECEIVER/ TRANSMITTER UNIT (1A2) CHANNEL 1	P1(1A2J3)	F	CONTROL TRANSFER UNIT (1A4)	P2(1A4J3)	F	SHIELD GROUND
				K			K	+48 VDC OTHER CHANNEL
				L			L	CHANNEL SELECT
				M			M	LOCAL ENABLE
				N			N	MODE SELECT RML 1
				P			P	MODE SELECT RML 2
				R			R	MODE SELECT RML 4
				S			S	MODE DESIG. EUA-1
				T			T	MODE DESIG. EUA-2
				U			U	REMOTE INTER. CONTROL
				V			V	POWER ON RDBK
				X			X	INTERROGATE RDBK
				Y			Y	RANGE ERROR RDBK
				Z			Z	DEFRUITER RDBK
				a			a	NO CONTROL RDBK
			MS3106A28-12S	b		MS3107A28-12SW	b	GROUND

TABLE 4-9: ATCBI-4 COMMON CONNECTIONS (Cont'd.)

CABLE NO.	WIRE TYPE	FROM			TO			FUNCTION
		UNIT	CONNECTOR	PIN	UNIT	CONNECTOR	PIN	
23	COAX 75Ω	RECEIVER/ TRANSMITTER UNIT (1A2) CHANNEL 1	P1(1A2J10) M39012/16-0002		CONTROL TRANSFER UNIT (1A4)	P2(1A4J20) M39012/16-0002		P_1,P_3 DESTAG (MODE TRIG 2)
25			P1(1A2J12) M39012/16-0002			P2(1A4J14) M39012/16-0002		BCN SYNC 2
38	AWG 16	CONTROL TRANSFER UNIT (1A4)	P1(1A4J1) MS3107A22-15S	A B C	JUNCTION BOX (1A1) CHANNEL 1	1A1TB2 1A1TB1 1A1TB2	3 9 8	120 VAC 120 VAC COMMON GROUND
45	COAX 50Ω	RACK ASSEMBLY (1)	1J3 UG-61A/U		DIRECTIONAL TRANSFER SWITCH (1S1) CHANNEL 1	P1(1S1J2) M39012/01-0002		DIRECTIONAL RF

TABLE 4-9: ATCBI-4 COMMON CONNECTIONS (Cont'd.)

CABLE NO.	WIRE TYPE	FROM			TO			FUNCTION
		UNIT	CONNECTOR	PIN	UNIT	CONNECTOR	PIN	
46	COAX 50Ω	RACK ASSEMBLY (1)	1J2 UG-61A/U		OMNI TRANSFER SWITCH (1S2) CHANNEL 1	P1(1S2J2) M39012/01-0002		OMNI RF
60	AWG 14	JUNCTION BOX (1A1) CHANNEL 2	1A1TB2 1A1TB2 1A1TB3	4 5	POWER SOURCE CONVENIENCE OUTLET			120 VAC 120 VAC COMMON GROUND
61	AWG 16		1A1TB1 1A1TB3	4 1	NO CONTROL INDICATOR CHANNEL 2			120 VAC NO CONTROL

TABLE 4-9: ATCBI-4 COMMON CONNECTIONS (Cont'd.)

CABLE NO.	WIRE TYPE	FROM			TO			FUNCTION
		UNIT	CONNECTOR	PIN	UNIT	CONNECTOR	PIN	
67	AWG 16	RECEIVER/ TRANSMITTER UNIT (1A2) CHANNEL 2	P1(1A2J1)	A	JUNCTION BOX (1A1) CHANNEL 2	1A1TB2	7	GROUND
				B		1A1TB3	1	NO CONTROL IND.
				C		1A1TB3	2	TRANS SW +48 VDC
				D		1A1TB3	3	ON LINE
				E		1A1TB3	4	DEFRUITER ON RDBK
				F		1A1TB3	5	DEFRUITER ON
				G		1A1TB3	6	DEFRUITER NO CONTROL
				H		1A1TB3	7	DEFRUITER GROUND
				J		1A1TB1	5	NO CONTROL RET
				K		1A1TB3	8	SPARE
				N		1A1TB2	1	120 VAC
				P		1A1TB1	7	120 VAC COMMON
			MS3106A22-19S					
68			P1(1A2J2)	H	MONITOR 2			RESET
				J				RANGE ERROR INHIBIT
				K				ON LINE
				L				INTERROGATE ENABLE
				M				HI-VOLTAGE ENABLE
				N				HI-VOLTAGE ENABLE
				P				GROUND
			MS3106A22-19P					

TABLE 4-9: ATCBI-4 COMMON CONNECTIONS (Cont'd.)

CABLE NO.	WIRE TYPE	FROM			TO			FUNCTION
		UNIT	CONNECTOR	PIN	UNIT	CONNECTOR	PIN	
69	AWG 20 or AWG 19 TEL PAIRS	RECEIVER/ TRANSMITTER UNIT (1A2) CHANNEL 2	P1(1A2J3) MS3106A28-12SX	F	CONTROL TRANSFER UNIT (1A4)	P2(1A4J4) MS3107A28-12SX	F	SHIELD GROUND
				K			K	+48 VDC OTHER CHANNEL
				L			L	CHANNEL 2 SELECT
				M			M	LOCAL ENABLE
				N			N	MODE SELECT RML 1
				P			P	MODE SELECT RML 2
				R			R	MODE SELECT RML 4
				S			S	MODE DESIG. EUA 1
				T			T	MODE DESIG. EUA 2
				U			U	INTERROGATOR CONTROL
				V			V	POWER ON RDBK
				X			X	INTERROGATE RDBK
				Y			Y	RANGE ERROR RDBK
				Z			Z	DEFRUITER RDBK
				a			a	NO CONTROL RDBK
				b			b	GROUND
71	COAX 75Ω		P1(1A2J5) M39012/16-0002		RECEIVER/TRANS. UNIT (1A2) CHANNEL 1	P2(1A2J5) M39012/16-0002		RADAR PRETRIGGER

TABLE 4-9: ATCBI-4 COMMON CONNECTIONS (Cont'd.)

CABLE NO.	WIRE TYPE	FROM			TO			FUNCTION
		UNIT	CONNECTOR	PIN	UNIT	CONNECTOR	PIN	
72	COAX 75Ω	RECEIVER/ TRANSMITTER UNIT (1A2) CHANNEL 2	P1(1A2J6) M39012/16-0002		RECEIVER/TRANS. UNIT (1A2) CHANNEL 1	P2(1A2J6) M39012/16-0002		RADAR ZERO RANGE TRIGGER
76			P1(1A2J10) M39012/16-0002		CONTROL TRANS. UNIT (1A4)	P2(1A4J21) M39012/16-0002		P_1,P_3 DESTAG (MODE TRIG 2)
78			P1(1A2J12) M39012/16-0002			P2(1A4J15) M39012/16-0002		BCN SYNC 2
101	AWG 14	JUNCTION BOX (1A1) CHANNEL 1	1A1TB1 1A1TB1	4 5	POWER SOURCE NO CONTROL IND. CHANNEL 1			120 VAC RETURN

TABLE 4-9: ATCBI-4 COMMON CONNECTIONS (Cont'd.)

CABLE NO.	WIRE TYPE	FROM			TO			FUNCTION
		UNIT	CONNECTOR	PIN	UNIT	CONNECTOR	PIN	
102	AWG 14	JUNCTION BOX (1A1) CHANNEL 2	1A1TB1 1A1TB1	4 5	POWER SOURCE NO CONTROL IND. CHANNEL 2			120 VAC RETURN
104	COAX 75 Ω	RECEIVER/ TRANSMITTER UNIT (1A2) CHANNEL 1	P1(1A2J9) M39012/16-0002		CONTROL TRANSFER UNIT (1A4)	P2(1A4J17) M39012/16-0002		P_1,P_3 DESTAG (MODE TRIG 1)
105			P1(1A2J11) M39012/16-0002			P2(1A4J11) M39012/16-0002		BCN SYNC 1
107		RECEIVER/ TRANSMITTER UNIT (1A2) CHANNEL 2	P1(1A2J9) M39012/16-0002			P2(1A4J18) M39012/16-0002		P_1,P_3 DESTAG (MODE TRIG 1)
108			P1(1A2J11) M39012/16-0002			P2(1A4J12) M39012/16-0002		BCN SYNC 1

TABLE 4-9: ATCBI-4 COMMON CONNECTIONS (Cont'd.)

CABLE NO.	WIRE TYPE	FROM			TO			FUNCTION
		UNIT	CONNECTOR	PIN	UNIT	CONNECTOR	PIN	
113	AWG 14	JUNCTION BOX (1A1) CHANNEL 2	1A1TB1 1A1TB1 1A1E1	1 2	PRIMARY POWER SOURCE			120 VAC 120 VAC COMMON GROUND
150	COAX 75Ω	CONTROL TRANS. UNIT (1A4)	P1(1A4J10) M39012/16-0002		ASR-4,5,6 MONITOR PPI	J1701		BEACON SELECTED VIDEO
					ASR-7 CONTROL UNIT	7A8J11		

54 DEFRUITER CONNECTIONS. All terminal installations are assumed to require a defruiter. Connection information is provided for defruiter models FA-7281, FA-8100 and MX-8757/UPX. Each ATCBI-4 channel has its own defruiter. Channel 1 defruiter is connected using cables 30, 32, 115, 116 and 6 and Channel 2 defruiter uses cables 83, 85, 119, 117 and 62. CAUTIONARY NOTE: ANY JUMPERS BETWEEN CHANNEL 1 AND CHANNEL 2 POWER CONNECTION TERMINAL BLOCKS SHOULD BE REMOVED. It should be noted that cables 32 and 85 are not used with the MX-8757/UPX defruiter.

The defruiter connections are illustrated in Fig. 4-5 and detailed in Table 4-10 for the FA-7281 defruiter. Table 4-11 for the FA-8100 defruiter and Table 4-12 for the MX-8757/UPX defruiter.

NOTE: ONE AND ONLY ONE TABLE SHOULD BE USED DEPENDING UPON THE DEFRUITER MODEL BEING INSTALLED.

TABLE 4-10: FA-7281 DEFRUITER CONNECTIONS

CABLE NO.	WIRE TYPE	FROM			TO			FUNCTION
		UNIT	CONNECTOR	PIN	UNIT	CONNECTOR	PIN	
30	COAX 75Ω	RECEIVER/ TRANSMITTER UNIT (1A2) CHANNEL 1	P1(1A2J17) M39012/16-0002		DEFRUITER CHANNEL 1	J4015 M39012/16-0002		P_1,P_3 DESTAG
32			P1(1A2J19) M39012/16-0002			J4013 M39012/16-0002		BEACON SYNC
115			P1(1A2J7) M39012/16-0002			J4017 M39012/16-0002		VIDEO 1 (DEFRUITER INPUT)
124		DEFRUITER CHANNEL 1	J4019 M39012/16-0002		CONTROL XFR UNIT (1A4)	P2(1A4J5) M39012/16-0002		VIDEO 1 (DEFRUITER OUTPUT)
148			J4020 M39012/16-0002			P2(1A4J8) M39012/16-0002		VIDEO 2 (DEFRUITER OUTPUT)
6	AWG 16	JUNCTION BOX (1A1) CHANNEL 1	1A1TB2	1	DEFRUITER CHANNEL 1	TB4002	4	120 VAC
			1A1TB1	6		TB4002	2	120 VAC COMMON
			1A1TB2	8		TB4002	1	GROUND
			1A1TB3	4		TB4001	2	DEFRUITER ON RDSK
			1A1TB3	5		TB4001	1	DEFRUITER ON
			1A1TB3	6		TB4001	3	DEFRUITER NO CONTROL
			1A1TB3	7		TB4001	5	GROUND

TABLE 4-10: FA-7281 DEFRUITER CONNECTIONS (continued)

CABLE NO.	WIRE TYPE	FROM			TO			FUNCTION
		UNIT	CONNECTOR	PIN	UNIT	CONNECTOR	PIN	
83	COAX 75Ω	RECEIVER/ TRANSMITTER UNIT (1A2) CHANNEL 2	P1(1A2J17) M39012/16-0002		DEFRUITER CHANNEL 2	J4015 M39012/16-0002		P_1,P_3 DESTAG
85			P1(1A2J19) M39012/16-0002			J4013 M39012/16-0002		BEACON SYNC
119			P1(1A2J7) M39012/16-0002			J4017 M39012/16-0002		VIDEO 1 (DEFRUITER INPUT)
125		DEFRUITER CHANNEL 2	J4019 M39012/16-0002		CONTROL XFR UNIT (1A4)	P2(1A4J6) M39012/16-0002		VIDEO 1 (DEFRUITER OUTPUT)
149			J4020 M39012/16-0002			P2(1A4J9) M39012/16-0002		VIDEO 2 (DEFRUITER OUTPUT)
62	AWG 16	JUNCTION BOX (1A1) CHANNEL 2	1A1TB2	1	DEFRUITER CHANNEL 2	TB4002	4	120 VAC
			1A1TB1	6		TB4002	2	120 VAC COMMON
			1A1TB2	8		TB4002	1	GROUND
			1A1TB3	4		TB4001	2	DEFRUITER ON RDBK
			1A1TB3	5		TB4001	1	DEFRUITER ON
			1A1TB3	6		TB4001	3	DEFRUITER NO CONTROL
			1A1TB3	7		TB4001	5	GROUND

TABLE 4-11: FA-8100 DEFRUITER CONNECTIONS

CABLE NO.	WIRE TYPE	FROM			TO			FUNCTION
		UNIT	CONNECTOR	PIN	UNIT	CONNECTOR	PIN	
30	COAX 75Ω	RECEIVER/ TRANSMITTER UNIT (1A2) CHANNEL 1	P1(1A2J17) M39012/16-0002		DEFRUITER CHANNEL 1	J4015 M39012/16-0002		P_1,P_3 DESTAG
32			P1(1A2J19) M39012/16-0002			J4013 M39012/16-0002		BEACON SYNC
115			P1(1A2J7) M39012/16-0002			J4017 M39012/16-0002		VIDEO 1 (DEFRUITER INPUT)
124		DEFRUITER CHANNEL 1	J4019 M39012/16-0002		CONTROL XFR UNIT (1A4)	P2(1A4J5) M39012/16-0002		VIDEO 1 (DEFRUITER OUTPUT)
148			J4020 M39012/16-0002			P2(1A4J8) M39012/16-0002		VIDEO 2 (DEFRUITER OUTPUT)
6	AWG 16	JUNCTION BOX (1A1) CHANNEL 1	1A1TB2	1	DEFRUITER CHANNEL 1	TB4002	4	120 VAC
			1A1TB1	6		TB4002	3	120 VAC COMMON
			1A1TB2	8		TB4002	2	GROUND
			1A1TB2	1		TB4002	5	115 VAC
			1A1TB1	6		TB4002	6	115 VAC COMMON
			1A1TB3	4		TB4001	2	DEFRUITER ON RDBK
			1A1TB3	5		TB4001	1	DEFRUITER ON
			1A1TB3	6		TB4001	3	DEFRUITER NO CONTROL
			1A1TB3	7		TB 4001	5	GROUND

TABLE 4-11: FA-8100 DEFRUITER CONNECTIONS (continued)

CABLE NO.	WIRE TYPE	FROM			TO			FUNCTION
		UNIT	CONNECTOR	PIN	UNIT	CONNECTOR	PIN	
83	COAX 75Ω	RECEIVER/ TRANSMITTER UNIT (1A2) CHANNEL 2	P1(1A2J17) M39012/16-0002		DEFRUITER CHANNEL 2	J4015 M39012/16-0002		P_1,P_3 DESTAG
85			P1(1A2J19) M39012/16-0002			J4013 M39012/16-0002		BEACON SYNC
119			P1(1A2J7) M39012/16-0002			J4017 M39012/16-0002		VIDEO 1 (DEFRUITER INPUT)
25		DEFRUITER CHANNEL 2	J4019 M39012/16-0002		CONTROL XFR UNIT (1A4)	P2(1A4J6) M39012/16-0002		VIDEO 1 (DEFRUITER OUTPUT)
149			J4020 M39012/16-0002			P2(1A4J9) M39012/16-0002		VIDEO 2 (DEFRUITER OUTPUT)
62	AWG 16	JUNCTION BOX (1A1) CHANNEL 2	1A1TB2	1	DEFRUITER CHANNEL 2	TB4002	4	120 VAC
			1A1TB1	6		TB4002	3	120 VAC COMMON
			1A1TB2	8		TB4002	2	GROUND
			1A1TB2	1		TB4002	5	115 VAC
			1A1TB1	6		TB4002	6	115 VAC COMMON
			1A1TB3	4		TB4001	2	DEFRUITER ON RDBK
			1A1TB3	5		TB4001	1	DEFRUITER ON
			1A1TB3	6		TB4001	3	DEFRUITER NO CONTROL
			1A1TB3	7		TB4001	5	GROUND

TABLE 4-12: MX8757/UPX DEFRUITER CONNECTIONS

CABLE NO.	WIRE TYPE	FROM			TO			FUNCTION
		UNIT	CONNECTOR	PIN	UNIT	CONNECTOR	PIN	
30	COAX 75Ω	RECEIVER/ TRANSMITTER UNIT (1A2) CHANNEL 1	P1(1A2J17) M39012/16-0002		DEFRUITER CHANNEL 1	J9 M39012/16-0002		P_1,P_3 DESTAG
115			P1(1A2J7) M39012/16-0002			J10 M39012/16-0002		VIDEO 1 (DEFRUITER INPUT)
124		DEFRUITER CHANNEL 1	J6 M39012/16-0002		CONTROL XFR UNIT (1A4)	P2(1A4J5) M39012/16-0002		VIDEO 1 (DEFRUITER OUTPUT)
148			J7 M39012/16-0002			P2(1A4J8) M39012/16-0002		VIDEO 2 (DEFRUITER OUTPUT)

TABLE 4-12: MX8757/UPX DEFRUITER CONNECTIONS (continued)

CABLE NO.	WIRE TYPE	FROM			TO			FUNCTION
		UNIT	CONNECTOR	PIN	UNIT	CONNECTOR	PIN	
62	AWG 16	JUNCTION BOX (1A1) CHANNEL 2	1A1TB2	1	DEFRUITER CHANNEL 2	J3	B	120 VAC
			1A1TB1	6		J3	A	120 VAC COMMON
			1A1TB2	8		J3	C	GROUND
						MS3102E10SL-3S		
			1A1TB3	4		J2	H	DEFRUITER ON RDBK
			1A1TB3	5		J2	F	DEFRUITER ON
			1A1TB3	6		J2	J	DEFRUITER NO CONTROL
			1A1TB3	7		J2	G	GROUND
						MS3102R18-1S		
83	COAX 75Ω	RECEIVER/ TRANSMITTER UNIT (1A2) CHANNEL 2	P1(1A2J17) M39012/16-0002		DEFRUITER CHANNEL 2	J9 M39012/16-0002		P_1,P_3 DESTAG
119			P1(1A2J7) M39012/16-0002			J10 M39012/16-0002		VIDEO 1 (DEFRUITER INPUT)

TABLE 4-12: MX8757/UPX DEFRUITER CONNECTIONS (continued)

CABLE NO.	WIRE TYPE	FROM			TO			FUNCTION
		UNIT	CONNECTOR	PIN	UNIT	CONNECTOR	PIN	
6	AWG 16	JUNCTION BOX (1A1) CHANNEL 1	1A1TB2	1	DEFRUITER CHANNEL 1	J3	B	120 VAC
			1A1TB1	6		J3	A	120 VAC COMMON
			1A1TB2	8		J3 MS3102E10SL-3S	C	GROUND
			1A1TB3	4		J2	H	DEFRUITER ON RDBK
			1A1TB3	5		J2	F	DEFRUITER ON
			1A1TB3	6		J2	J	DEFRUITER NO CONTROL
			1A1TB3	7		J2 MS3102R1S-1S	G	GROUND
125	COAX 75Ω	DEFRUITER CHANNEL 2	J2 M39012/16-0002		CONTROL XFR UNIT (1A4)	P2(1A4J6) M39012/16-0002		VIDEO 1 (DEFRUITER OUTPUT)
149			J7 M39012/16-0002			P2(1A4J9) M39012/16-0002		VIDEO 2 (DEFRUITER OUTPUT)

55. PRIMARY RADAR CONNECTIONS. Most if not all ATCBI-4 terminal installations will be associated with a primary radar (ASR). Connections to the primary radar utilize cables 18, 19, 120, 121, 122 and 123 as shown in Figs. 4-1 and 4-5. The first two cables provide the ATCBI-4 with a radar pretrigger and a radar zero range trigger, respectively; the last four cables provide the link between the ATCBI-4 transmitter site equipment and the indicator site equipment. Detailed connection information is provided in Fig. 4-1 and Table 4-13.

A modification of the primary radar is required to make the zero range trigger available. The nearest FAA regional office should be consulted for modification details.

NOTE: CONNECTION INFORMATION IS PROVIDED FOR THE ASR-4, ASR-5 & 6 AND THE ASR-7, ALL ON THE SAME FIGURE (FIG. 4-1) AND TABLE (TABLE 4-13). CARE SHOULD BE EXERCISED IN USING THIS INFORMATION.

56.-59 RESERVED.

TABLE 4-13: PRIMARY RADAR CONNECTIONS

CABLE NO.	WIRE TYPE	FROM			TO					FUNCTION
		UNIT	CONNECTOR	PIN	UNIT	CONNECTOR			PIN	
18	COAX 75 Ω	RECEIVER/ TRANSMITTER UNIT (1A2) CHANNEL 1	P1(1A2J5) M39012/16-0002		PRIMARY RADAR (ASR-4,5,6,7)	ASR-4	ASR-5,6	ASR-7		RADAR PRETRIGGER
						J1408	J1408 M39012/16-0002	A20J3		
19			P1(1A2J6) M39012/16-0002			MODIFICATION REQUIRED				RADAR ZERO RANGE TRIGGER
121		CONTROL TRANSFER UNIT (1A4)	P2(1A4J7) M39012/16-0002		RADAR CABLE JUNCTION BOX (ASR-4,5,6,7)	J1403	J1403 M39012/16-0002	A20J6		BCN VIDEO
122			P2(1A4J13) M39012/16-0002			J1408	J1408 M39012/16-0002	A20J3		BCN SYNC
123			P2(1A4J19) M39012/16-0002			J1404	J1404 M39012/16-0002	A20J5		BCN MODE TRIGGERS

TABLE 4-13: PRIMARY RADAR CONNECTIONS (Cont'd.)

CABLE NO.	WIRE TYPE	FROM			TO					FUNCTION
		UNIT	CONNECTOR	PIN	UNIT	CONNECTOR			PIN	
						ASR-4	ASR-5,6	ASR-7		
120	AWG 20 or AWG 19 TEL PAIRS	CONTROL TRANSFER UNIT (1A4)	P2(1A4J2)	K	RADAR CABLE JUNCTION BOX (ASR-4,5,6,7)	TB1407	TB1406	A20TB6	1	LOCAL ENABLE
				L					2	CHANNEL 1 SELECT
				M					3	CHANNEL 2 SELECT
				N					4	MODE SELECT RML 1
				P					5	MODE SELECT RML 2
				R					6	MODE SELECT RML 4
				S					7	MODE DESIGN EUA 1
				T					8	MODE DEISGN EUA 2
				U					9	INTERROGATE CONTROL
				d					10	GROUND FOR CONTROLS
				V					11	CHANNEL 1 RDBK
				W					12	CHANNEL 2 RDBK
				X					13	INTERROGATE RDBK
				Y					14	RANGE ERROR RDBK
				Z					15	DEFRUIT RDBK
				J					16	POWER ON RDBK
				a					17	NO CONTROL RDBK
			MS3107A28-12S	b					18	GROUND FOR RDBK

INTENTIONALLY LEFT BLANK

SECTION 3. INDICATOR SITE

60. ATCBI-4 REMOTE CONTROL BOX. This Paragraph contains connection information relevant to the installation of the ATCBI-4 remote control box at the indicator site. The ATCBI-4 remote control box is not used in ARTS III installations. The connections between the ATCBI-4 remote control box and the radar cable junction box are illustrated in Figs. 4-2a and 4-3a and detailed in Table 4-14 Cable 126 carries the control and readback signals to and from the transmitter site. Cable 133 connects the remote control box to a source of AC power. Figure 4-2a is for use in RML-2, 3 and 4 installations and Fig. 4-3a is for use in RML-6 installations. The ATCBI-4 remote control box must be modified when used with the RML-6. Modification details are discussed in the next paragraph.

NOTE: CONNECTION INFORMATION IS PROVIDED FOR THE ASR-4, ASR-5 & 6 AND THE ASR-7, ALL ON THE SAME FIGURE (FIGS. 4-2a AND 4-3a) AND TABLE (TABLE 4-14). CARE SHOULD BE EXERCISED IN USING THIS INFORMATION.

61. MODIFICATION DETAILS. Operation of the ATCBI-4 with the RML-6 requires a modification to the remote control box. The purpose and details of this modification are described in this paragraph.

Control functions RML 1 RML 2, RML 4, EUA 1 and EUA 2 all require the grounding of an appropriate control line. These may be grounded directly by a switch closure, or indirectly through a diode. In the case of the RML-6, the polarity of the open circuit voltage on the control line is the reverse of the landline or other RML cases. Because of this, it is not possible to ground the control lines through the diodes in the remote control box.

The modification required in the ATCBI-4 remote control box to permit operation with the RML-6 is to remove the following diodes, reverse polarity and replace. The diodes involved are identified on Fig. 12-82 of the ATCBI-4 technical manual as

CR-5	CR-6	CR-7	CR-8
CR-9	CR-10	CR-11	

The remote control box should be labeled "MODIFIED FOR USE WITH RML-6".

TABLE 4-14: ATCBI-4 REMOTE CONTROL BOX CONNECTION

CABLE NO.	WIRE TYPE	FROM					TO			FUNCTION
		UNIT	CONNECTOR			PIN	UNIT	CONNECTOR	PIN	
			ASR-4	ASR-5,6	ASR-7					
126		RADAR CABLE JUNCTION BOX (ASR-4,5,6,7)					ATCBI-4 REMOTE CONTROL BOX			
	AWG 20 OR AWG 19 TEL PAIRS		TB10207	TB10206	A20TB6	1		P2(3J2)	K	LOCAL ENABLE
						2			L	CHANNEL 1 SELECT
						3			M	CHANNEL 2 SELECT
						4			N	MODE SELECT RML 1
						5			P	MODE SELECT RML 2
						6			R	MODE SELECT RML 4
						7			S	MODE DESIGN EUA 1
						8			T	MODE DESIGN EUA 2
						9			U	INTERROGATE CONTROL
						10			d	GROUND FOR CONTROLS
						11			V	CHANNEL 1 RDBK
						12			W	CHANNEL 2 RDBK
						13			X	INTERROGATE RDBK
						14			Y	RANGE ERROR RDBK
						15			Z	DEFRUIT RDBK
						16			J	POWER ON RDBK
						17			a	NO CONTROL RDBK
						18			b	GROUND FOR RDBK
								MS3107A28-12S		
133		PRIMARY POWER SOURCE								
	AWG 14							P1(3J1)	A	120 VAC
									B	COMMON
								MS3107A22-15S	C	GROUND

62. ATCBI-2 INDICATOR SITE EQUIPMENT. This paragraph contains connection information relevant to the installation of the ATCBI-4 with the ATCBI-2 indicator site equipment.

a. RML-2, 3 & 4. Connection of the ATCBI-2 indicator site equipment with the radar cable junction box when using an RML-2, 3 or 4 requires the fabrication of cables 127, 131 and 132 as shown in Fig. 4-2a. Cable 131 carries the combined beacon sync and mode triggers from the RML and cable 132 carries the beacon video. Readback signals for display on the ATCBI-2 control consoles are carried from the radar cable junction box by cable 127. Isolation diodes are required when the readback lines of the indicator site equipment are paralleled. (see Fig. 4-4). A detailed list of these connections are provided in Table 4-15.

NOTE: CONNECTION INFORMATION IS PROVIDED FOR THE ASR-4, ASR-5 & 6 AND THE ASR-7, ALL ON THE SAME FIGURE (FIG. 4-2a) AND TABLE (TABLE 4-15). CARE SHOULD BE EXERCISED IN USING THIS INFORMATION. OBSERVE DIODE POLARITY IN FIG. 4-4.

b. RML-6. Connection of the ATCBI-2 indicator site equipment and the ATCBI-4 line driver to the radar cable junction box when using the RML-6 requires the fabrication of cables 127, 132, 144, 145 and 146 as shown in Fig. 4-3a. Cable 132 carries the beacon video and cables 144 and 145 carry the beacon sync and mode triggers to the ATCBI-4 line driver. The line driver is required to combine the beacon sync and mode triggers which the RML-6 provides at separate outputs. The combined triggers at the line driver output are carried by cable 146 to the ATCBI-2 indicator site equipment. Readback signals for display on the ATCBI-2 control consoles are carried from the radar cable junction box by cable 127. Isolation diodes are required when the readback lines of the indicator site equipment are paralleled (see Fig. 4-4). A detailed list of these connections are provided in Table 4-16.

NOTE: CONNECTION INFORMATION IS PROVIDED FOR THE ASR-4, ASR-5 & 6 AND THE ASR-7, ALL ON THE SAME FIGURE (FIG. 4-3a) AND TABLE (TABLE 4-16). CARE SHOULD BE EXERCISED IN USING THIS INFORMATION. OBSERVE DIODE POLARITY IN FIG. 4-4.

TABLE 4-15: ASR-4,5,6,7/ATCBI-2 INDICATOR SITE EQUIPMENT CONNECTIONS (RML-2,3,4 REMOTING)

CABLE NO.	WIRE TYPE	FROM					TO			FUNCTION
		UNIT	CONNECTOR			PIN	UNIT	CONNECTOR	PIN	
			ASR-4	ASR-5,6	ASR-7					
127	AWG 19 TEL PAIRS	RADAR CABLE JUNCTION BOX (ASR-4,5,6,7)	TB10207	TB10206	A20TB6	16 17 13 15 14 18	ATCBI-2 COMMON RACK 1	TB5001	4 5 6 7 8 22	POWER ON RDBK NO CONTROL RDBK INTERROGATE RDBK DEFRUIT RDBK RANGE ERROR RDBK GROUND FOR RDBK
132	COAX 75Ω		J10203	J10203	A20J6			J5106 M39012/16-0002		BCN VIDEO
			M39012/16-0002							
131			J10204	J10204	A20J5			J5107 M39012/16-0002		BCN TRIGGERS
			M39012/16-0002							

TABLE 4-16: ASR-4,5,6,7/ATCBI-2 INDICATOR SITE EQUIPMENT CONNECTIONS (RML-6 REMOTING)

CABLE NO.	WIRE TYPE	FROM					TO			FUNCTION
		UNIT	CONNECTOR			PIN	UNIT	CONNECTOR	PIN	
			ASR-4	ASR-5,6	ASR-7					
127	AWG 19 TEL PAIRS	RADAR CABLE JUNCTION BOX (ASR-4,5,6,7)	TB10207	TB10206	A20TB6	16 17 13 15 14 18	ATCBI-2 COMMON RACK 1	TB5001	4 5 6 7 8 22	POWER ON RDBK NO CONTROL RDBK INTERROGATE RDBK DEFRUIT RDBK RANGE ERROR RDBK GROUND FOR RDBK
132	COAX 75Ω		J10203	J10203	A20J6			J5106 M39012/16-0002		BCN VIDEO
			M39012/16-0002							
144			J10204	J10204	A20J3		LINE DRIVER (ATCBI-4/1A3)	P2(1A3J3) M39012/16-0002		BCN SYNC
			M39012/16-0002							
145			J10208	J10208	A20J5			P2(1A3J2) M39012/16-0002		BCN MODE TRIGGERS
			M39012/16-0002							
146		LINE DRIVER (ATCBI-4/1A3)	P1-J5 M39012/16-0002				ATCBI-2 COMMON RACK 1	J5107 M39012/16-0002		BCN TRIGGERS
147	AWG		P1-1A3-J1 MS3106A22-15S			A B C	PRIMARY POWER SOURCE			120 VAC COMMON GROUND

63. ATCBI-3 INDICATOR SITE EQUIPMENT. This paragraph contains connection information relevant to the installation of the ATCBI-4 with the ATCBI-3 indicator site equipment.

a. RML-2, 3 & 4. Connection of the ATCBI-3 indicator site equipment with the radar cable junction box when using an RML-2, 3 or 4 requires the fabrication of cables 127, 131 and 132 as shown in Fig. 4-2a. Cable 131 carries the combined beacon sync and mode triggers from the RML and cable 132 carries the beacon video. Readback signals for display on the ATCBI-3 control consoles are carried from the radar cable junction box by cable 127. Isolation diodes are required when the readback lines of the indicator site equipment are paralleled (see Fig. 4-4). A detailed list of these connections are provided in Table 4-17.

NOTE: CONNECTION INFORMATION IS PROVIDED FOR THE ASR-4, ASR-5 & 6 AND THE ASR-7, ALL ON THE SAME FIGURE (FIG. 4-2a) AND TABLE (TABLE 4-17). CARE SHOULD BE EXERCISED IN USING THIS INFORMATION. OBSERVE DIODE POLARITY IN FIG. 4-4.

b. RML-6. Connection of the ATCBI-3 indicator site equipment and the ATCBI-4 line driver to the radar cable junction box when using the RML-6 requires the fabrication of cables 127, 132, 144, 145 and 146 as shown in Fig. 4-3a. Cable 132 carries the beacon video and cables 144 and 145 carry the beacon sync and mode triggers to the ATCBI-4 line driver. The line driver is required to combine the beacon sync and mode triggers which the RML-6 provides at separate outputs. The combined triggers at the line driver output are carried by cable 146 to the ATCBI-3 indicator site equipment. Readback signals for display on the ATCBI-3 control consoles are carried from the radar cable junction box by cable 127. Isolation diodes are required when the readback lines of the indicator site equipment are paralleled (see Fig. 4-4). A detailed list of these connections are provided in Table 4-18.

NOTE: CONNECTION INFORMATION IS PROVIDED FOR THE ASR-4, ASR-5 & 6 AND THE ASR-7, ALL ON THE SAME FIGURE (FIG. 4-3a) AND TABLE (TABLE 4-18). CARE SHOULD BE EXERCISED IN USING THIS INFORMATION. OBSERVE DIODE POLARITY IN FIG. 4-4.

TABLE 4-17: ASR-4,5,6,7/ATCBI-3 INDICATOR SITE EQUIPMENT CONNECTIONS (RML-2,3,4 REMOTING)

CABLE NO.	WIRE TYPE	FROM					TO			FUNCTION
		UNIT	CONNECTOR			PIN	UNIT	CONNECTOR	PIN	
			ASR-4	ASR-5,6	ASR-7					
127	AWG 19 TEL PAIRS	RADAR CABLE JUNCTION BOX (ASR-4,5,6,7)	TB10207	TB10206	A20TB6	16 17 13 15 14 18	ATCBI-3 COMMON RACK 1	TB5002 E5002	9 10 11 12 13	POWER ON RDBK NO CONTROL RDBK INTERROGATE RDBK DEFRUIT RDBK RANGE ERROR RDBK GROUND FOR REBK
132	COAX 75Ω		J10203 M39012/16-0002	J10203 M39012/16-0002	A20J6			J5106 M39012/16-0002		BCN VIDEO
131			J10204 M39012/16-0002	J10204 M39012/16-0002	A20J5			J5107		BCN TRIGGERS

TABLE 4-18: ASR-4,5,6,7/ATCBI-3 INDICATOR SITE EQUIPMENT CONNECTIONS (RML-6 REMOTING)

CABLE NO.	WIRE TYPE	FROM					TO			FUNCTION
		UNIT	CONNECTOR			PIN	UNIT	CONNECTOR	PIN	
			ASR-4	ASR-5,6	ASR-7					
127	AWG 19 TEL PAIRS	RADAR CABLE JUNCTION BOX (ASR-4,5,6,7)	TB10207	TB10206	A20TB6	16 17 13 15 14 18	ATCBI-3 COMMON RACK 1	TB5002 E5002	9 10 11 12 13	POWER ON RDBK NO CONTROL RDBK INTERROGATE RDBK DEFRUIT RDBK RANGE ERROR RDBK GROUND FOR RDBK
132	COAX 75 Ω		J10203	J10203	A20J6			J5106		BCN VIDEO
			M39012/16-0002					M39012/16-0002		
144			J10204	J10204	A20J3		LINE DRIVER (ATCBI-4/1A3)	P2(1A3J3)		BCN SYNC
			M39012/16-0002					M39012/16-0002		
145			J10208	J10208	A20J5			P2(1A3J2)		BCN MODE TRIGGERS
			M39012/16-0002					M39012/16-0002		
146		LINE DRIVER (ATCBI-4/1A3)	P1-J5 M39012/16-0002				ATCBI-3 COMMON RACK 1	J5107 M39012/16-0002		BCN TRIGGERS
147	AWG 14		P1-1A3-J1 MS3106A22-15S			A B C	PRIMARY POWER SOURCE			120 VAC COMMON GROUND

64. AN/TPX-42A INDICATOR SITE EQUIPMENT. This paragraph contains connection information relevant to the installation of the ATCBI-4 with the AN/TPX-42A indicator site equipment.

a. RML-2, 3 & 4. Connection of the AN/TPX-42A indicator site equipment with the radar cable junction box when using an RML-2, 3 or 4 requires the fabrication of cables 127, 131 and 132 as shown in Fig. 4-2a. Cable 131 carries the combined beacon sync and mode triggers from the RML and cable 132 carries the beacon video. Readback signals for display on the AN/TPX-42A control consoles are carried from the radar cable junction box by cable 127. Isolation diodes are required when the readback lines of the indicator site equipment are paralleled (see Fig. 4-4). A detailed list of these connections are provided in Table 4-19.

NOTE: CONNECTION INFORMATION IS PROVIDED FOR THE ASR-4, ASR-5 & 6 AND THE ASR-7, ALL ON THE SAME FIGURE (FIG 4-2a) AND TABLE (TABLE 4-19). CARE SHOULD BE EXERCISED IN USING THIS INFORMATION. OBSERVE DIODE POLARITY IN FIG. 4-4.

b. RML-6. Connection of the AN/TPX-42A indicator site equipment and the ATCBI-4 line driver to the radar cable junction box when using the RML-6 requires the fabrication of cables 127, 132, 144, 145 and 146 as shown in Fig. 4-3a. Cable 132 carries the beacon video and cables 144 and 145 carry the beacon sync and mode triggers to the ATCBI-4 line driver. The line driver is required to combine the beacon sync and mode triggers which the RML-6 provides at separate outputs. The combined triggers at the line driver output are carried by cable 146 to the AN/TPX-42A indicator site equipment. Readback signals for display on the AN/TPX-42A control consoles are carried from the radar cable junction box by cable 127. Isolation diodes are required when the readback lines of the indicator site equipment are paralleled (see Fig. 4-4). A detailed list of these connections are provided in Table 4-20.

NOTE: CONNECTION INFORMATION IS PROVIDED FOR THE ASR-4, ASR-5 & 6 AND THE ASR-7, ALL ON THE SAME FIGURE (FIG. 4-3a) AND TABLE (TABLE 4-20). CARE SHOULD BE EXERCISED IN USING THIS INFORMATION. OBSERVE DIODE POLARITY IN FIG. 4-4.

TABLE 4-19: ASR-4,5,6,7/AN/TPX-42A CONNECTIONS (RML-2,3,4 REMOTING)

CABLE NO.	WIRE TYPE	FROM					TO			FUNCTION
		UNIT	CONNECTOR			PIN	UNIT	CONNECTOR	PIN	
			ASR-4	ASR-5,6	ASR-7					
127	AWG 19 TEL PAIRS	RADAR CABLE JUNCTION BOX (ASR-4,5,6,7)	TB10207	TB10206	A20TB6	11 12 18 13 18 14 18 15 18 17 18 18 18	C8626T	P1(J1) MS2126F-20-41S	y z a L M R S C D e f p q	CHANNEL 1 RDBK CHANNEL 2 RDBK CHANNEL RETURN INTERROGATE RDBK INTERROGATE RETURN RANGE ERROR RDBK RANGE ERROR RETURN DEFRUIT RDBK DEFRUIT RETURN NO CONTROL RDBK NO CONTROL RETURN DEFRUIT INDICATOR DEFRUIT RETURN
132	COAX 75Ω		J10203	J10203	A20J6		CN1358/T	P11(J11) M39012/16-0002		BCN VIDEO
			M39012/16-0002							
131			J10204	J10204	A20J5			P12(J12) M39012/16-0002		BCN TRIGGERS
			M39012/16-0002							

TABLE 4-20: ASR-4,5,6,7/AN/TPX-42A CONNECTIONS (RML-6 REMOTING)

CABLE NO.	WIRE TYPE	FROM					TO			FUNCTION
		UNIT	CONNECTOR			PIN	UNIT	CONNECTOR	PIN	
			ASR-4	ASR-5,6	ASR-7					
127	AWG 19 TEL PAIRS	RADAR CABLE JUNCTION BOX (ASR-4,5,6,7)	TB10207	TB10206	A20TB6	11	C8626T	P1(J1)	y	CHANNEL 1 RDBK
						12			z	CHANNEL 2 RDBK
						18			a	CHANNEL RETURN
						13			L	INTERROGATE RDBK
						18			M	INTERROGATE RETURN
						14			R	RANGE ERROR RDBK
						18			S	RANGE ERROR RETURN
						15			C	DEFRUIT RDBK
						18			D	DEFRUIT RETURN
						17			e	NO CONTROL RDBK
						18			f	NO CONTROL RETURN
						18			p	DEFRUIT INDICATOR
						18		MS2126F-20-41S	q	DEFRUIT RETURN
132	COAX 75 Ω		J10203	J10203	A20J6		CN1358/T	J7P11(J11) M39012/16-0002		BCN VIDEO
			M39012/16-0002							
144			J10204	J10204	A20J3		LINE DRIVER (ATCBI-4/1A3)	P2(1A3J3) M39012/16-0002		BCN SYNC
			M39012/16-0002							
145			J10208	J10208	A20J5			P2(1A3J2) M39012/16-0002		BCN MODE TRIGGERS
			M39012/16-0002							

TABLE 4-20: ASR-4,5,6,7/AN/TPX-42A CONNECTIONS (RML-6 REMOTING) (continued)

CABLE NO.	WIRE TYPE	FROM			TO			FUNCTION
		UNIT	CONNECTOR	PIN	UNIT	CONNECTOR	PIN	
146	COAX 75 Ω	LINE DRIVER (ATCBI-4/1A3)	P1-J5 M39012/16-0002		CN1358/T	-J8 M39012/16-0002		BCN TRIGGERS
147	AWG 14		P1-1A3-J1 MS3106A22-15S	A B C	PRIMARY POWER SOURCE			120 VAC COMMON GROUND

65. AUTOMATED RADAR TERMINAL SYSTEM (ARTS III). This paragraph contains information relevant to the installation of the ATCRI-4 with the ARTS III indicator site equipment.

a. RML-2, 3 & 4. Connections to the ARTS III junction box when using an RML-2, 3 or 4 requires the fabrication of cables 127, 131 and 132 as shown in Fig. 4-2b. Cable 131 carries the combined beacon sync and mode triggers from the RML and cable 132 carries the beacon video. Readback signals for display on the ARTS III control consoles are carried from the radar cable junction box by cable 127. A detailed list of these connections is provided in Table 4-21.

NOTE: CONNECTION INFORMATION IS PROVIDED FOR THE ASR-4, ASR-5 & 6 AND THE ASR-7, ALL ON THE SAME FIGURE (FIG. 4-2b) AND TABLE (TABLE 4-21). CARE SHOULD BE EXERCISED IN USING THIS INFORMATION.

b. RML-6. Connections to the ARTS III junction box and ATCBI-4 line driver when using an RML-6 requires the fabrication of cables 127, 132, 144, 145 and 146 as shown in Fig. 4-3b. Cable 132 carries the beacon video and cables 144 and 145 carry the beacon sync and mode triggers to the ATCBI-4 line driver. The line driver is required to combine the beacon sync and mode triggers which the RML-6 provides at separate outputs. The combined triggers at the line driver output are carried by cable 146 to the ARTS indicator site equipment. Readback signals for display on the ARTS III control consoles are carried from the radar cable junction box by cable 127. A detailed list of these connections is provided in Table 4-22.

NOTE: CONNECTION INFORMATION IS PROVIDED FOR THE ASR-4, ASR-5 & 6 AND THE ASR-7, ALL ON THE SAME FIGURE (FIG. 4-3b) AND TABLE (TABLE 4-22). CARE SHOULD BE EXERCISED IN USING THIS INFORMATION.

TABLE 4-21: ASR-4,5,6,7/ARTS III CONNECTIONS (RML-2,3,4 REMOTING)

CABLE NO.	WIRE TYPE	FROM					TO			FUNCTION
		UNIT	CONNECTOR			PIN	UNIT	CONNECTOR	PIN	
			ASR-4	ASR-5,6	ASR-7					
127	AWG 19 TEL PAIRS	RADAR CABLE JUNCTION BOX (ASR-4,5,6,7)	TB10207	TB10206	A20TB6	13	ARTS III JUNCTION BOX	TB-3	10	INTERROGATE RDBK
						14		TB-1	19	RANGE ERROR RDBK
						15		TB-3	12	DEFRUIT RDBK
						16		TB-3	6	POWER ON RDBK
						17		TB-3	8	NO CONTROL RDBK
						18		TB-3	14	GROUND FOR RDBK
132	COAX 75Ω		J10203	J10203	A20J6			J7 M39012/16-0002		BNC VIDEO
			M39012/16-0002							
131			J10204	J10204	A20J5			J8 M39012/16-0002		BNC TRIGGERS
			M39012/16-0002							

TABLE 4-22: ASR-4,5,6,7/ARTS III CONNECTIONS (RML-6 REMOTING)

CABLE NO.	WIRE TYPE	FROM					TO			FUNCTION
		UNIT	CONNECTOR			PIN	UNIT	CONNECTOR	PIN	
			ASR-4	ASR-5,6	ASR-7					
127	AWG 19 TEL PAIRS	RADAR CABLE JUNCTION BOX (ASR-4,5,6,7)	TB10207	TB10206	A20TB6	13 14 15 16 17 18	ARTS III JUNCTION BOX	TB-3 TB-1 TB-3 TB-3 TB-3 TB-3	10 19 12 6 8 14	INTERROGATE RDBK RANGE ERROR RDBK DEFRUIT RDBK POWER ON RDBK NO CONTROL RDBK GROUND FOR RDBK
132	COAX 75Ω		J10203	J10203	A20J6			J7 M39012/16-0002		BCN VIDEO
			M39012/16-0002							
144			J10204	J10204	A20J3		LINE DRIVER (ATCBI-4/1A3)	P2(1A3J3) M39012/16-0002		BCN SYNC
			M39012/16-0002							
145			J10208	J10208	A20J5			P2(1A3J2) M39012/16-0002		BCN MODE TRIGGERS
			M39012/16-0002							
146		LINE DRIVER (ATCBI-4/1A3)	P1-J5 M39012/16-0002				ARTS III JUNCTION BOX	J8 M39012/16-0002		BCN TRIGGERS
147	AWG 14		P1-1A3-J1 MS3106A22-15S			A B C	PRIMARY POWER SOURCE			120 VAC COMMON GROUND