ORDER

6360.15A

MODE S PROJECT IMPLEMENTATION PLAN

September 23, 1992

DEPARTMENT OF TRANSPORTATION
FEDERAL AVIATION ADMINISTRATION

Distribution: A-W(NA/NR/AP/SE/SU)-3; A-W(SM/TR/FS/TM/BU/HT/CS)-2; A-X(AF/AT)-3; A-Y(DE/AY)-2; A-Z-2; A-FAF-O(LTD)

Initiated By: ANR-300

RECORD OF CHANGES

DIRECTIVE NO. 6360.15A

CHANGE TO BASIC	SUPPLEMENT			OPTIONAL	CHANGE TO BASIC	SUPPLEMENTS			OPTIONAL

FAA Form 1320-5 (6-80) USE PREVIOUS EDITION

FOREWORD

This order transmits the Project Implementation Plan (PIP) for the Mode Select (Mode S) Beacon Sensor System. The PIP guides and directs implementation planning for Mode S. It identifies and describes required activities and assigns responsibilities to ensure that Mode S is properly introduced into the National Airspace System (NAS), and establishes Federal Aviation Administration (FAA) program management, project implementation, and defines responsibilities governing the activities of participating organizations. The program office is committed to generating updates as issues are clarified and requests comments from readers at any time.

Byron Johnson
Acting Program Manager for Secondary Radar

TABLE OF CONTENTS

	Page Number
CHAPTER 1. GENERAL.	1
1. Purpose	1
2. Distribution	1
3. Cancellation	1
4. Definitions	1
5. Authority to Change this Order	1
6.-19. Reserved	1
CHAPTER 2. PROJECT OVERVIEW.	3
20. Synopsis	3
21. Purpose	3
22. History	4
23.-29. Reserved	5
CHAPTER 3. PROJECT DESCRIPTION.	7
30. Functional Description	7
Figure 3-1. Mode S System Environment	8
Figure 3-2. Typical Mode S Terminal Site Configuration	15
Figure 3-3. Typical Mode S Terminal Site Configuration	16
Figure 3-4. Typical Mode S En Route Site Configuration	17
Figure 3-5. Typical Mode S En Route Site Configuration	18
31. Physical Description	19
Table 3-1. Equipment Located in Building or Shelter	19
Table 3-2. Equipment Located Outside of the Building or Shelter	20
Table 3-3. CPME Equipment	21
Figure 3-6. Physical Relationship of Mode S Units	22

TABLE OF CONTENTS (continued)

	Page Number
32. System Requirements	23
Table 3-4. Floor-Mounted Equipment	23
Table 3-5. Wall-Mounted or Externally-Mounted Equipment	23
33. Interfaces	24
34.-39. Reserved	24
CHAPTER 4. PROJECT SCHEDULE AND STATUS.	25
40. Project Schedules and General Status	25
41. Milestone Schedule Summary	27
42. Interdependencies and Sequence	28
43.-49. Reserved	29
CHAPTER 5. PROJECT MANAGEMENT.	31
50. Project Management, General	31
Table 5-1. Mode S Project Management Structure	32
51. Project Contacts	45
Table 5-2. Mode S Project Contact List	46
52. Project Coordination	46
53. Project Responsibility Matrix	48
Table 5-3. Mode S Project Responsibility Matrix	49
54. Project Managerial Communications	50
55. Implementation Staffing	50
56. Planning and Reports	51
57. Applicable Documents	53
58.-59. Reserved	54
CHAPTER 6. PROJECT FUNDING.	55
60. Project Funding Status, General	55
61. Project Funding Status, Regions	55
62.-69. Reserved	55
CHAPTER 7. DEPLOYMENT.	57
70. General Deployment Aspects	57
71. Site Preparation	57

TABLE OF CONTENTS (continued)

Page Number

Table 7-1. ASR/Mode S Sites to Receive 75-KW Engine Generators 60
Table 7-2. ASR/Mode S Sites to Receive Power Distribution Upgrades 61
Table 7-3. ASR/Mode S Sites to Receive Air Conditioning Upgrades 61
Table 7-4. FPS Sites Requiring Above-Ground-Level Mode S Installations 62
72. Delivery 62
73. Installation Plan 63
74.-79. Reserved 64

CHAPTER 8. VERIFICATION. 65

80. Factory Verification 65
81. Checkout 65
82. Contractor Integration and Site Acceptance Testing 66
83. Contractor Acceptance Inspection (CAI) 66
84. Operational Testing and NAS Integration Testing 66
85. Shakedown and Changeover 66
86. Joint Acceptance Inspection (JAI) 67
87. Flight Inspection 67
88.-89. Reserved 68

CHAPTER 9. INTEGRATED LOGISTICS SUPPORT. 69

90. Maintenance Concept 69
91. Training 69
92. Support Tools and Test Equipment 70
93. Supply Support 70
94. Vendor Data and Technical Manuals 71
95. Equipment Removal 71
96. Facilities 71
97.-99. Reserved 71

APPENDIX 1. ABBREVIATIONS AND ACRONYMS 1
APPENDIX 2. EQUIPMENT DELIVERY SCHEDULE 1
APPENDIX 3. MODE S OUTSIDE TECHNICAL SUPPORT 1

CHAPTER 1. GENERAL.

1. PURPOSE. This order, in establishing a project implementation plan (PIP), provides management direction and guidance for the introduction of Mode S into the NAS. The PIP includes the procurement and implementation of beacon antennas and sensor equipment for replacement of designated existing Air Traffic Control Radar Beacon System (ATCRBS) facilities and for the establishment of new facilities where required.

2. DISTRIBUTION. This order is being distributed at branch level in the office of the Program Directors for Automation and Surveillance, Program Manager for Advanced Automation and Acquisition Support; and the NAS System Engineering Service; division level to the Systems Maintenance, Air Traffic Rules and Procedures, Flight Standards; and Air Traffic Plans and Requirements Services; and to the Offices of Air Traffic System Management, Budget, Training and Higher Education, and the Assistant Administrator for Civil Aviation Security; branch level to regional Airway Facilities and Air Traffic divisions; division level to the FAA Logistics Center and the FAA Academy at the Mike Monroney Aeronautical Center and the FAA Technical Center; and limited distribution to Airway Facilities field Offices.

3. CANCELLATION. Order 6360.15, System Implementation Plan/Mode S Program, dated September 4, 1986, is canceled.

4. DEFINITIONS. The abbreviations and acronyms used in this order are defined in appendix 1.

5. AUTHORITY TO CHANGE THIS ORDER. The Program Manager for Secondary Radar, ANR-300, shall approve all changes to this order. Requests for changes to this PIP should be directed to the Program Manager for Secondary Radar, ANR-300, FAA Headquarters, 800 Independence Avenue SW, Washington, DC 20591. Deviations from this order must be approved by ANR-300.

6.-19. RESERVED.

CHAPTER 2. PROJECT OVERVIEW

20. SYNOPSIS. Major aspects of this project are:

a. The Mode S project provides for implementation of the Mode S beacon sensor system and integration into the NAS. It encompasses the design, fabrication, testing, and installation of all elements of the system at designated ATCRBS sites. Integration into the NAS will be evolutionary, in that it will allow both ATCRBS and Mode S operation until Mode S is fully implemented.

b. The Mode S project is a Major System Acquisition (MSA) and is being implemented with the applicable provisions of Order 1810.1E, Major Acquisitions, dated February 1991, as a guide. Prior to the dissemination of Order 1810.1E, project activities were in accordance with agency policy and procedures in effect at the time.

c. The Mode S project is in conformance with Order 1000.1, Policy Statement of the Federal Aviation Administration, which is concerned with ensuring safety, promoting air commerce, supporting national security, and achieving effective airspace utilization. All actions to achieve the objectives of the project are to be based on the policy contained in orders cited in subparagraphs 20b and 20c and in the orders and documents listed in paragraph 57.

d. These orders are the principal means by which the administration establishes major organizational concepts and structures, assigns missions and functions, and delegates authority. Each organization is expected to assign appropriate personnel to meet the various needs of this implementation plan.

21. PURPOSE. This project is to provide an improved radar beacon system that eliminates deficiencies inherent in the present ATCRBS environment and that provides enhanced air traffic control (ATC) capabilities and an integral data link.

22. HISTORY.

a. Need. The following are needs:

(1) The existing ATCRBS has a number of deficiencies which limit its ability to meet the demands presented by the increasing automation of the ATC system, particularly in an environment of increasing traffic density. The inherent limitations of ATCRBS, because of its signal structure and the nature of the system, result in transponder replies to all received interrogations. In a typical high-density terminal area there are many aircraft responding to many interrogators, leading to a high level of interference that results in lost or garbled replies as well as false targets. In addition, replies from aircraft closely spaced in range and/or azimuth will overlap and interfere with each other.

(2) These deficiencies include the inability to meet the demands of increasing air traffic, automation of ATC, interference, accuracy, data rate, communications, programmable adaptation, reliability, maintainability, supportability, etc.

b. Authorization. As recommended by the ATC Advisory Committee, the FAA undertook development of a replacement secondary radar system that would incorporate discrete addressing, digital data link communications, and monopulse receiver techniques. The system, now called Mode S, has progressed through the concept validation phase and has been undergoing thorough testing, including demonstrations to field controllers. Based on the results of the feasibility testing, validation and controller demonstrations, the Mode S concept was approved for national implementation by the Transportation Systems Acquisition Review Council (TSARC) in March 1983. This resulted in (1) development of FAA-E-2716, Specification for Mode Select Beacon System Sensor (Mode S) and (2) a contract award on October 5, 1984, (DTFA01-85-C-00002) to a Joint Venture (JV) organization, Westinghouse Electric Corporation (WEC)/Paramax Corporation, for the first production Mode S sensors.

c. Design Requirements. A fundamental requirement is that Mode S be implemented in an evolutionary manner. Mode S is an enhancement of the existing ATCRBS. In addition to the improved beacon tracking capability, the Mode S system has the added capability of a communications data link between the ground stations and aircraft. By the time deployment of Mode S begins, planned for 1992, there will be approximately 200,000 aircraft

equipped with ATCRBS transponders and approximately 320 FAA interrogators, plus numerous military and industry interrogators.

Mode S is designed to operate in this environment, and in a way that would permit the gradual transition to Mode S operation.

d. Integration into the NAS. The Mode S beacon system is, by design, fully compatible and interoperable with the existing ATCRBS. The Mode S ground station can interrogate aircraft that are equipped with either Mode S or ATCRBS transponders and process replies from either system. Aircraft without Mode S transponders will continue to respond to ATCRBS interrogations. Similarly, aircraft with Mode S transponders will be capable of operating with non-Mode S (ATCRBS) ground sites. With this compatibility, Mode S can be implemented over a period of time without impacting the operation of either system. Aircraft owners and operators will be encouraged to convert to Mode S avionics in order to take advantage of services that will be provided via the data link. After the planned 137 systems are commissioned, there will be 180 ATCRBS sites still operating in the NAS. An agency study is being conducted to determine the type of system will exist at the these 180 sites.

e. Benefits. Implementation of Mode S will result in improvements in safety and productivity and system capacity as well as enhanced reliability, maintainability, and supportability. Many benefits accruing from the NAS modernization, particularly the benefits of enhancing automation, are dependent on Mode S and its integral data link. Implementing Mode S will remove the need to support vacuum-tube equipment that is progressively deteriorating. In addition, Mode S will have a remote monitoring capability that will provide additional improvements in reliability and maintainability as well as reductions in life-cycle support costs.

23.-29. RESERVED.

CHAPTER 3. PROJECT DESCRIPTION

30. FUNCTIONAL DESCRIPTION.

a. System Concept.

(1) Mode S. As with the ATCRBS, Mode S is comprised of three elements: the ground sensor, the airborne transponder, and the signals in space that form the link between them. The fundamental surveillance difference between Mode S and ATCRBS is the manner of addressing aircraft or selecting which aircraft will respond to an interrogation. In ATCRBS, all transponder-equipped aircraft within the main beam of the interrogator antenna signal respond. In Mode S, each aircraft is assigned a unique address code. Aircraft within the main beam of the antenna respond to interrogations if the aircraft's address code is included in the interrogation. Mode S includes the capability of calling all (or selectively, all non-Mode S) aircraft at a much lower interrogation rate. The addition of monopulse processing will improve azimuth determination accuracy and will allow reduction of the number of interrogations, since the monopulse system can provide the positional accuracy required for Mode S from a single reply. See figure 3-1 for a typical Mode S environment.

(2) Improvements. Two major advantages accrue from the use of discrete address for surveillance. First, an interrogator can limit its interrogation to only those targets for which it has surveillance responsibility. This prevents system saturation caused by all transponders responding to all interrogators within line-of-sight. Secondly, appropriate timing of interrogations ensures that responses from aircraft do not overlap, eliminating mutual interference from overlapping replies from closely-spaced aircraft.

(3) Data Link. Discrete address in interrogations and replies permits the inclusion of messages to or from a particular aircraft, thereby providing the basis for a ground-air and air-ground digital data link. Two basic types of data link messages are planned; flight advisory services, which will be implemented with the Data Link Processor (DLP), and ATC services, which will be implemented with the Advanced En Route Automation (AERA) system.

FIGURE 3-1. MODE S SYSTEM ENVIRONMENT

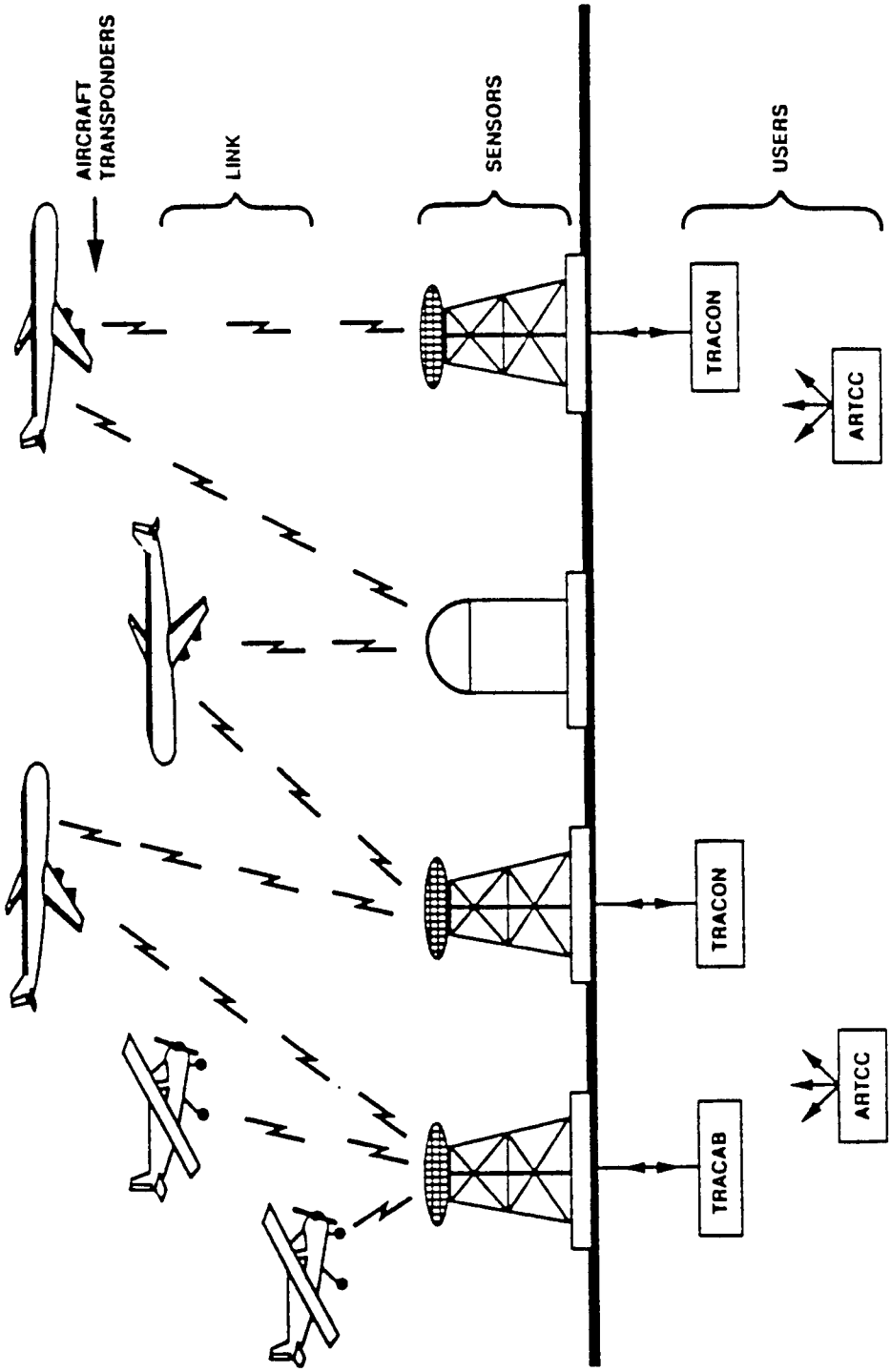

b. Design Considerations.

(1) Compatibility. An elementary consideration in the design of Mode S is the requirement of evolutionary implementation and compatibility with the existing beacon system. Continuity of radar surveillance is required for any combination of aircraft and ground equipment. The Mode S antenna and sensor are compatible with existing aircraft ATCRBS transponders, and the aircraft Mode S transponders are compatible with the ATCRBS interrogators.

(2) Reduced Interference. Mode S employs a number of design features which minimize interference. Among these are the following:

(a) Each Mode S-equipped aircraft has an assigned unique address. Messages to and from an aircraft discretely addressed do not result in responses from other aircraft.

(b) A reduced interrogation rate is possible through use of an antenna having a sum and difference pattern (monopulse antenna). The interrogation is transmitted on the sum pattern. Replies are received on both the sum and difference patterns. A monopulse estimate is made to establish the angular difference between the target and the antenna pointing angle. While it is possible to determine target position with a single reply, the Mode S sensor interrogation rate is a site-adaptable parameter depending on the interrogation mode (Mode S or ATCRBS interrogation and replies) within the antenna beamwidth for operation with existing ATCRBS-equipped aircraft.

(c) The monopulse estimates for each reply pulse readily identify the reply to which each of the received pulses belong when overlapping replies are received from different angles within the antenna beam. Monopulse degarbling continues to operate into regions of pulse overlap that could not be resolved by pulse timing alone. Therefore, it reduces the susceptibility of the ATCRBS mode to synchronous garble from aircraft which are near the same range and azimuth.

(d) Interrogations of Mode S-equipped aircraft can be range-ordered in such a way that replies do not overlap.

(e) The Mode S computer is programmed to identify and flag false targets caused by reflections from large objects such as buildings.

(f) A Mode S-equipped aircraft responds to

interrogations containing its discrete address. This eliminates unnecessary replies to adjacent facilities and to interrogations which are intended for acquisition of other aircraft not on file.

(3) Improved Accuracy. The ATCRBS processor determines target azimuth by marking the center of the received string of replies, which may not necessarily reflect the actual position of the aircraft. The monopulse direction-finding technique has proven to be much more accurate in determining the angle of arrival of the reply signals.

(4) Improved En Route Data Rate. The long-range Air Route Surveillance Radars (ARSR), which rotate at 5 to 6 rpm, will use the Mode S back-to-back antenna assembly. This will provide beacon data updates at twice the rate of the primary radar.

(5) Improved Communications. Mode S provides both ground-to-air and air-to-ground data link capability. Air-to-ground messages may be either pilot-initiated (e.g., a request for a clearance change or for weather information), or ground-initiated (e.g., to acquire onboard aircraft information). The data link project is being implemented in two phases, with the initial capability limited to flight advisory services in conjunction with the DLP. ATC data link functions will be implemented later with AERA.

(6) Programmable Adaptation. The Mode S sensor can be configured to provide service under a variety of conditions. General software configuration factors include:

(a) Whether the sensor serves a terminal or en route facility or both.

(b) Volume of airspace of interest to the facility. Mode S limits its discrete interrogation to aircraft of interest within the assigned coverage of the facility.

(c) When multiple coverage exists, a software function controls both sensor operation and reconfiguration of coverage upon sensor failure or sector reconfiguration.

(d) Mode S-equipped aircraft are handed off to an adjacent sensor at designated boundaries, using techniques which perform acquisition in a completely autonomous manner.

(7) Reliability/Maintainability. The Mode S sensor represents a considerable improvement over ATCRBS with state-of-the-art design and components. Features of the Mode S design which enhance the reliability and maintainability include:

(a) Failure sensing and automatic switching between channels.

(b) All equipment is constructed of solid-state modules which are replaceable at a modular level.

(c) The Remote Maintenance Subsystem (RMS) allows failures to be diagnosed at a central location.

(d) Built-in diagnostics which identify a faulty unit.

(8) Supportability. A basic design consideration in Mode S is the range, quantity and storage locations for parts, support and test equipment required for life cycle maintenance of the system.

c. System Functions.

(1) General. As illustrated in figure 3-1, Mode S provides surveillance and ground-air-ground communication service to ATC facilities, including en route Air Route Traffic Control Centers (ARTCC), and terminal area systems, including Terminal Radar Approach Control (TRACON) and Terminal Radar Approach Control in Tower Cab (TRACAB). In addition, Mode S provides service to ground data bases that support flight advisory services.

(2) Sensor Surveillance. The Mode S sensor provides surveillance of ATCRBS- and Mode S-equipped aircraft and operates as a store and forward communication relay for data link communication between aircraft and ATC facilities. In addition, the sensor accepts digitized radar target reports from a collocated radar and combines these with the beacon reports into a composite surveillance output stream. When beacon and radar reports occur on the same target, the radar report is suppressed and the beacon report tagged as radar-reinforced. Radar-only output reports are provided on targets that are not beacon-equipped.

(3) Mode S File. To discretely interrogate Mode S-equipped aircraft, the sensor maintains a file of the identity and predicted position (updated each scan interval) of all such aircraft within its defined area of coverage.

(4) Coverage Map. Each sensor's operation is controlled by a prestored map defining its coverage volume, which may change from normal operation in the event of various system failures (e.g., the failure of an adjacent sensor).

(5) Network Communication. In a configuration utilizing multiple radars, each sensor may communicate with adjacent sensors via a common ATC facility to hand off targets as they pass from the region of overlapping coverage to that of an adjacent sensor. In addition, in regions of overlapping coverage, this intersensor communication may be used to assist in the reacquisition of a lost target.

(6) Facility Interfaces. Each sensor can provide surveillance and communication services to several ATC facilities; i.e., all those whose areas of control responsibility include any part of the coverage area of the sensor. The interface between the sensor and control facility comprises a one-way circuit for the transmission of surveillance data, both radar and beacon to each control facility, and one or more two-way circuits for the interchange of data link messages. The latter is also used to transmit various status and control messages between the sensor and the ATC facility. Also, one or more two-way circuits are provided for non-ATC data link services between the sensor and the DLP. The Mode S sensor interfaces with the RMMS/MPS to provide remote control for sensor performance monitoring and to support fault isolation and testing. The Programming Support Facility (PSF) interfaces with the Mode S to maintain and/or modify sensor application software and firmware. The PSF will be located at the FAA Technical Center and staffed by National Airway Engineering Support Division, ASM-400.

(7) Mode S Avionics. The Mode S airborne transponder includes all of the functions of an ATCRBS transponder, and adds to these the ability to decode Mode S interrogations and to format and transmit the appropriate replies. For data link, the transponder is analogous to a modem for the radiofrequency (RF) link. On receipt of a ground-to-air transmission, it verifies the correctness of the received message using the error-detecting code. Once verified, the transponder transfers the message

contents to one or more external airborne data link processors. For air-to-ground messages, the aircraft transponder accepts the message contents from an external input device, and formats and encodes the data for transmission as part of the reply to a subsequent interrogation when instructed to do so by the sensor. The Mode S data link is Aeronautical Telecommunications Network (ATN)-compatible, allowing a single airborne data link processor to choose among multiple data link paths (Mode S, satellite, or VHF).

NOTE: Figures 3-2 through 3-5 depict typical terminal and en route configurations, and serve to illustrate Mode S system functions.

d. Software Features.

(1) Software Architecture. The Mode S employs modular software in each of its component subsystems. This architecture is used to allow even relatively major changes to be made within each subsystem without severe impact on the remainder of the system software. Each module employs validity checking and/or detection and correction techniques in keeping with the best programming practices. The software architecture automatically configures redundant sensor components and allows automatic recovery from component failures. The software components provide for expansion of system capacity and for the addition of sensor functions.

(2) Software Concept. Software modules are grouped by major function to facilitate design and implementation activities. A requirements traceability concept is employed to assure that software performance conforms to specification requirements. All software is produced in accordance with a software development plan, which requires conformance to current industry standards, the use of a higher order language and a development methodology using a top-down design and testing approach. Implementation of the software concept will be in two phases, referred to as Software Release 1.1 and Software Release 1.2, to permit meeting Specification FAA-E-2716 on an incremental basis, as software is developed and perfected and as Mode S systems are produced. The computer code is subject to rigid quality assurance procedures. Modules are thoroughly tested prior to system integration. Complete software maintenance and user manuals are provided.

(3) Software Operation. The software supports the sensor peak loading, performance, reliability, and maintainability requirements. The software contains performance

monitors which detect failures and provide an automatic recovery procedure to assure sensor operational continuity. The software will extract on command from within the processor to aid in the diagnosis of subtle problems. Common data is maintained such that hardware component failure will not cause sensor failure. Sensor data processing is distributed among several processors to assure system flexibility and attainment of all performance requirements. The software provides for site adaptation parameters which permits the use of a standard software system for all sites. The site adaptation parameters will be provided by ASM-400. This capability enhances the agency's ability to maintain the software and, in an orderly manner, introduce enhancements into the field.

FIGURE 3-2. TYPICAL MODE S TERMINAL SITE CONFIGURATION

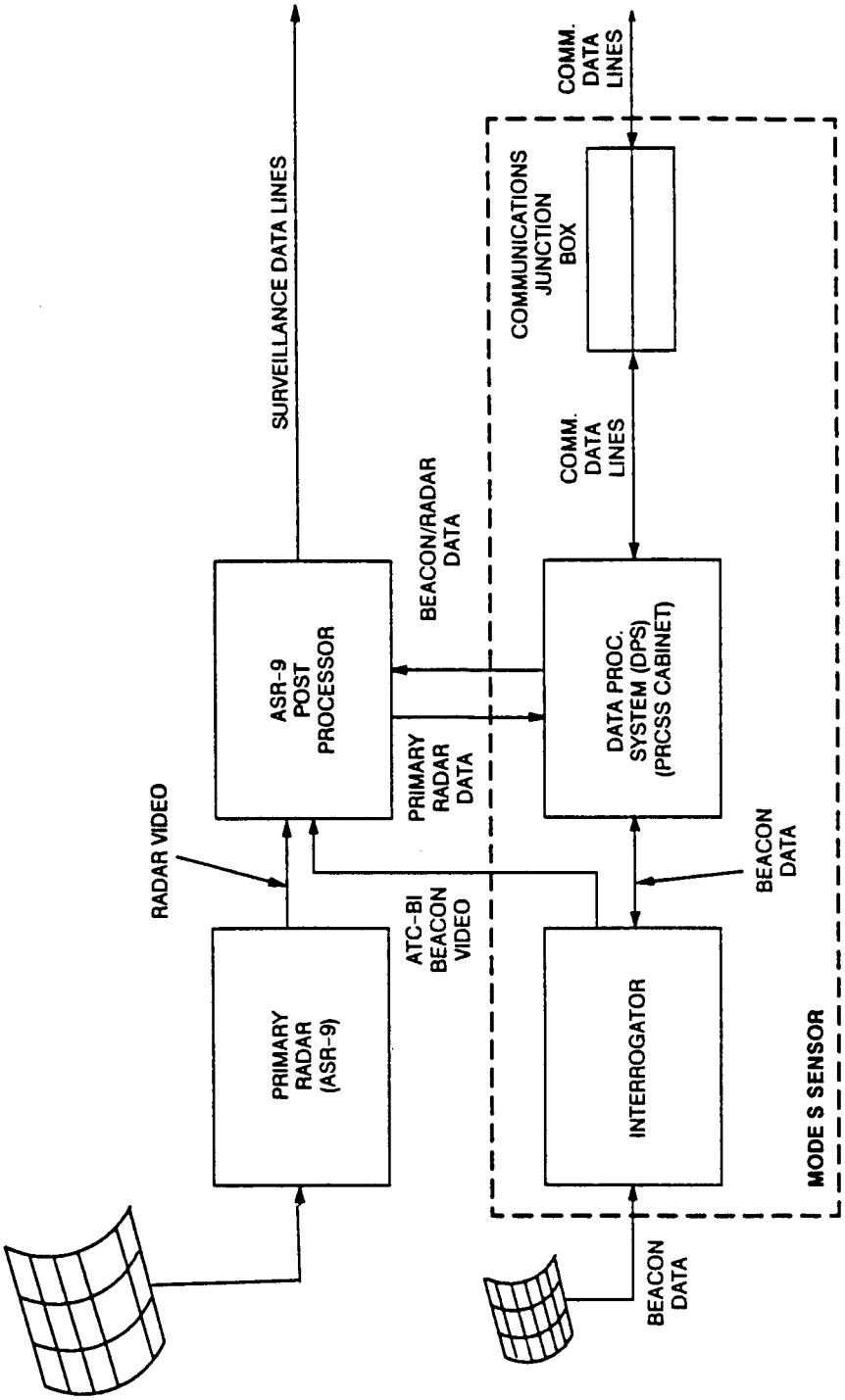

NOTE:
AT A TERMINAL SITE THAT USES AN ASR-7 OR ASR-8 RADAR, PRIMARY RADAR DATA IS NOT TRANSFERRED BETWEEN THE RADAR EQUIPMENT AND MODE S SENSOR. AT THESE SITES THE DPS SUPPLIES BEACON-ONLY DATA AND COMMUNICATIONS DATA TO ATC FACILITIES VIA COMM. JUNCTION BOX.

FIGURE 3-3. TYPICAL MODE S TERMINAL SITE CONFIGURATION

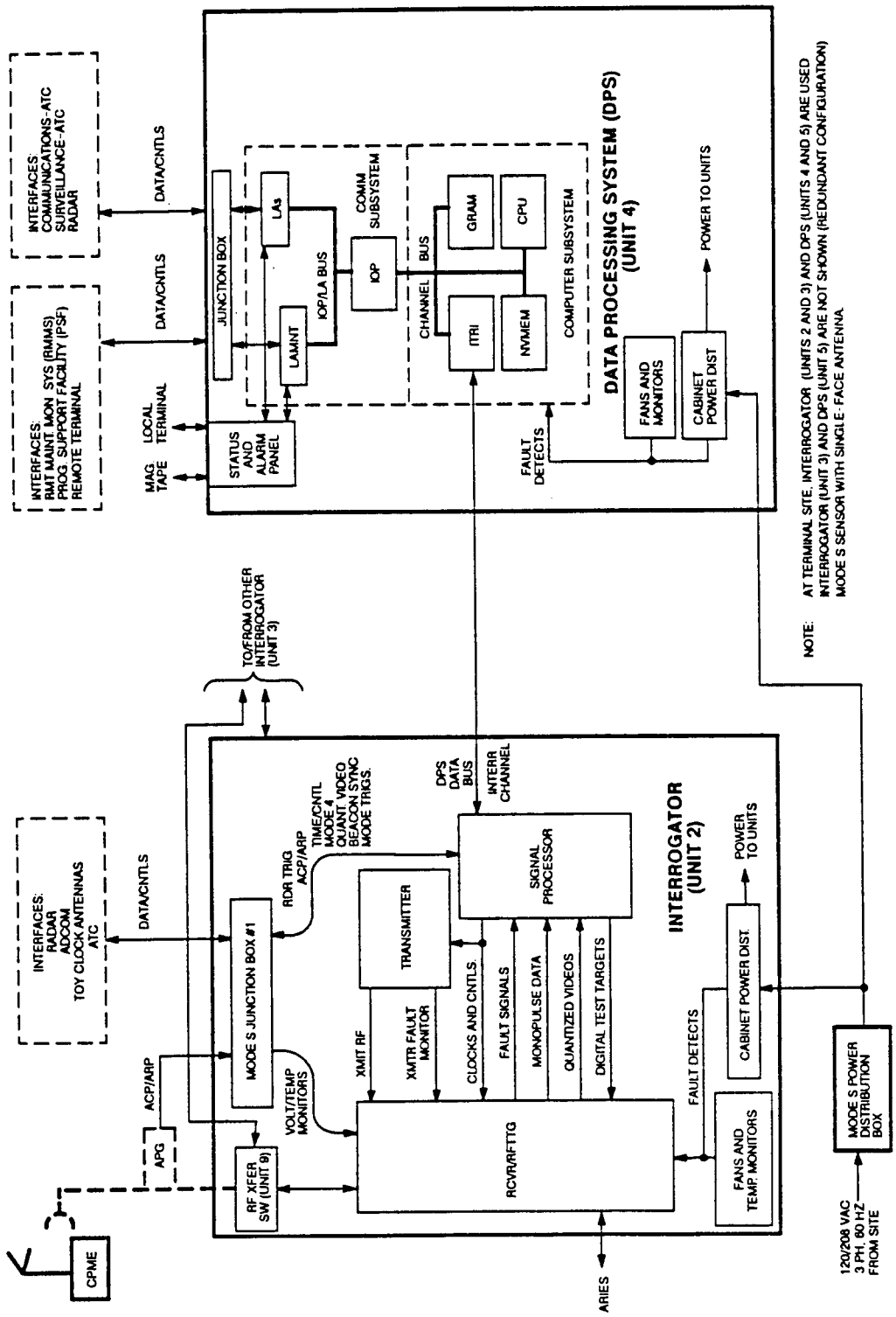

FIGURE 3-4. TYPICAL MODE S EN ROUTE SITE CONFIGURATION

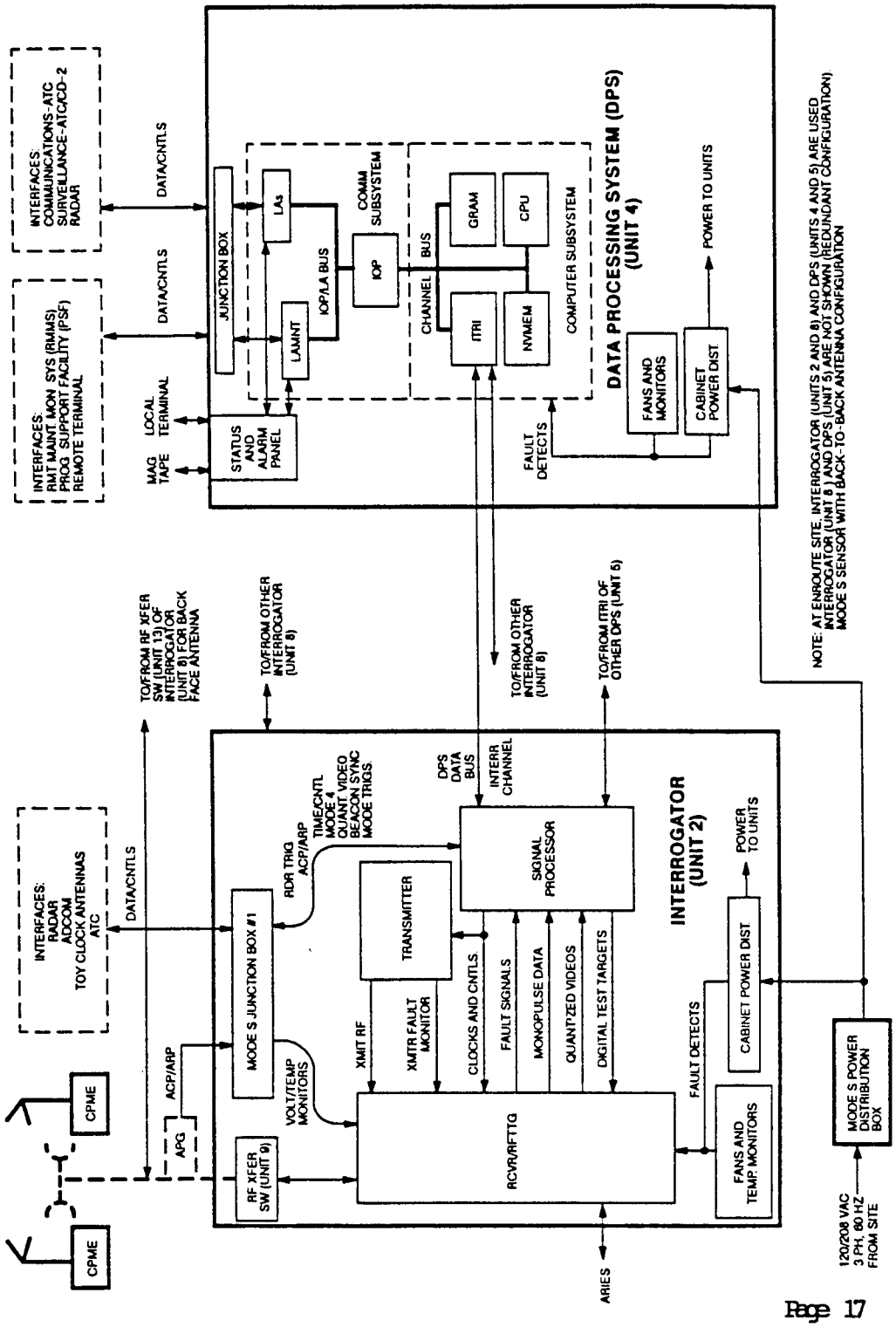

FIGURE 3-5. TYPICAL MODE S EN ROUTE SITE CONFIGURATION

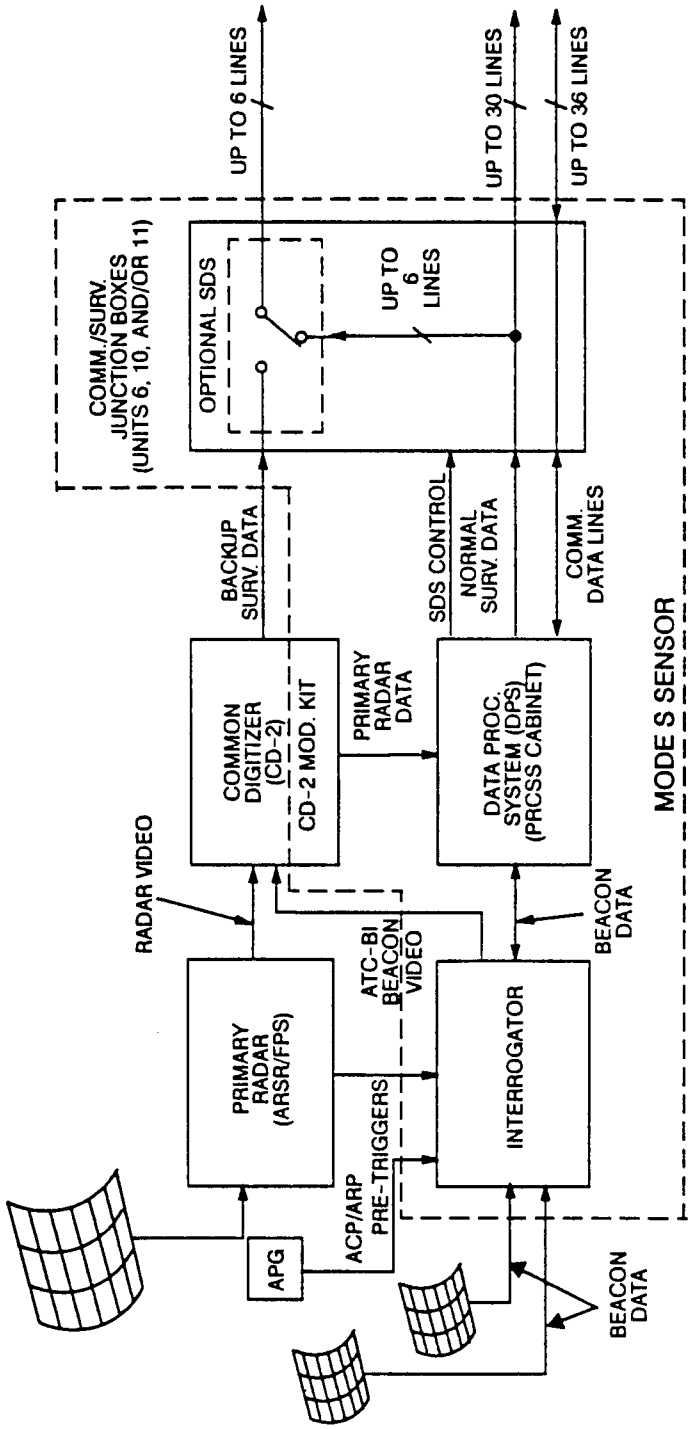

(4) Adaptation Program. Data representing site specific parameters are software implemented to create a data base for each site. These data include:

(a) Area of coverage limits.

(b) Backup coverage.

(c) Adjacent facilities for handoff.

(d) Source of reflections.

(e) Selection of values for parameters specified as site adaptable.

(f) Operational parameters to be used such as ATCRBS mode interlace patterns.

(5) Support. Support for Mode S system software is the responsibility of ASM-400 at the FAA Technical Center in Atlantic City, NJ. The contractor is required to furnish the FAA with source code and hard copy documentation to perform this function. The FAA will be provided with the necessary hardware/software tools to read, de-bug, enhance, and copy Mode S system software.

31. PHYSICAL DESCRIPTION. The Mode S system is comprised of various cabinets, racks, junction boxes, distribution panels, antennas, towers, rotary joints, modems, numerous interconnecting cable systems, and, at certain sites, equipment shelters.

a. Major system component units located within a building or a shelter are listed in table 3-1 (also see figure 3-6).

TABLE 3-1. EQUIPMENT LOCATED IN BUILDING OR SHELTER

Unit	Dimensions	Weight
Two Interrogator Cabinets	96"W X 32"D X 80"H	2200 lbs.
Two Data Processor System (DPS) Cabinets	96"W X 32"D X 80"H	2400 lbs.
One Mode S Junction Box	24"W X 17"D X 36"H	130 lbs.
One or more Communications Junction Box(s)	33"W X 15"D X 8"H	60 lbs.
One Power Distribution Panel	20"W X 8"D X 48"H	30 lbs.

One RF Transfer Switch	36"W X 4"D X 14"H	20 lbs.
Two Time of Year (TOY) Clock Assemblies (located in Mode S junction box)	13"W X 3"D X 10"H	12 lbs.
TOY Remote kits		
CD-2 mod kit (located inside CD-2 in en route sites)		
Modems for surv, com, PSF, RMM, Remote Control links		

b. Antennas and rotary joints located outside of the building or shelter are listed in table 3-2.

Table 3-2. EQUIPMENT LOCATED OUTSIDE OF THE BUILDING OR SHELTER

Unit	Dimensions	Weight
One Open Array Antenna (at terminal sites)	312"W X 46"D X 64"H	550 lbs.
OR		
One Back-to-Back Antenna Assembly (at en route sites)	317"W X 40"D X 68"H	860 lbs.
One rotary joint at terminal sites	12"diameter X 60"H	120 lbs.
OR		
One rotary joint at en route sites	63"H to 105"H	125 lbs. to 400 lbs.
Two TOY antennas	13"W X 10"D X 30"H	20 lbs.

NOTE: Two 14-bit azimuth encoders w/power supplies are included with each rotary joint.

c. Calibration Performance Monitoring Equipment (CPME) is located remotely from the Mode S site, typically in another building or in weatherproof cabinets mounted on a concrete slab. Each Mode S site includes two CPME's. Major components for one CPME system are listed in table 3-3.

TABLE 3-3. CPME EQUIPMENT

Unit	Dimensions	Weight
CPME Cabinet	29"W X 29"D X 52"H	90 lbs.
Power Supply	19"W X 18"D X 11"H	48 lbs.
Receiver/Transmitter	19"W X 18"D X 16"H	50 lbs.
Battery Box	32"W X 26"D X 23"H	75 lbs.
Antenna	23"W X 30"D X 18"H	21 lbs.

The total power requirement for a typical Mode S configuration, not including the CPME installations, is 11,645 watts.

d. Orientation of the Mode S equipment units in a typical configuration is shown in figure 3-6.

FIGURE 3-6. PHYSICAL RELATIONSHIP OF MODE S UNITS

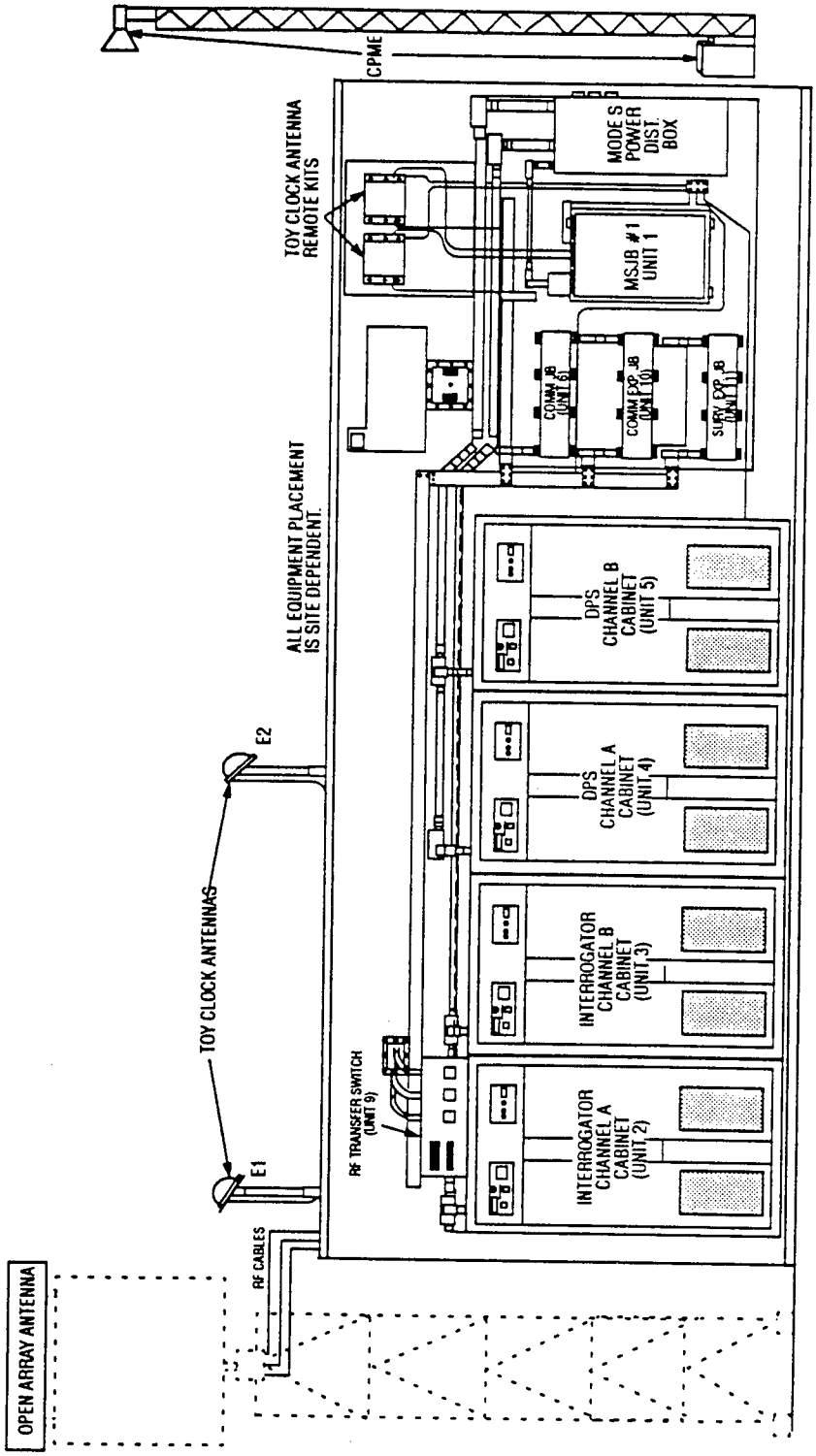

32. SYSTEM REQUIREMENTS. The Mode S system requirements for floor space, floor loading, and electrical power, are shown in table 3-4. Requirements are listed on a per unit basis. Units to be mounted on the walls or outside of the building or shelter are listed in table 3-5. These units do not impact floor area or floor loading requirements.

TABLE 3-4. FLOOR-MOUNTED EQUIPMENT

Unit	Floor Space	Floor Loading	Power (watts)
Interrogator Cabinets	96"W X 32"D	2200 lbs	2400
Data Processor System Cabinets	96"W X 32"D	2200 lbs	3300

TABLE 3-5. WALL-MOUNTED OR EXTERNALLY-MOUNTED EQUIPMENT

Unit	Wall Area or Floor Are	Weight	Power (watts)
Mode S Junction Box	24"W X 36"H	130 lbs	200
Power Distribution Panel	20"W X 48"H	30 lbs	
Communications Junction Box	33"W X 8"H	60 lbs	
Modem rack			
TOY Remote Kit	13"W X 10"H	6 lbs	
TOY Antenna (roof)	13"W X 10"D	10 lbs	
CPME Cabinet (see Note)	29"W X 29"D	188 lbs	223
CPME Battery Box (see Note)	32"W X 26"D	75 lbs	
CPME Antenna (see Note)	23"W X 30"D	21 lbs	

NOTE: The CPME cabinet and battery box will be located externally of the Mode S building or shelter, either in another building or on a pad. The antenna and tower also will be located outside of the Mode S building or shelter.

33. INTERFACES.

a. Onsite. The onsite interfaces include (1) the primary radar for surveillance data information and trigger and antenna azimuth data, (2) the Common Digitizer 2 (CD-2) for correlating beacon and radar data, and (3) modems for transferring data to other locations.

b. Remote. The remote interface is via communication narrowband landlines or microwave data links for the following data:

(1) Aircraft position reports are forwarded on the surveillance link.

(2) Non-ATC communications links, 9600 bits per second (bps) full-duplex lines, provide interface with DLP at primary and backup ARTCC's.

(3) ATC data link messages will not be implemented until the area control facilities are operational and AERA implemented. Connections will be via the National Interfacility Communications Service (NICS).

(4) Monitoring and control messages are forwarded to the Remote Maintenance Monitoring System (RMMS) via dedicated lines.

(5) Remote terminal to tower.

(6) PSF.

c. Terminal/En Route Interface. The remote interface links are similar at terminal and en route facilities, but reformatted into compatible messages for specific interfacing equipment.

34.-39. RESERVED.

CHAPTER 4. PROJECT SCHEDULE AND STATUS

40. PROJECT SCHEDULES AND GENERAL STATUS.

a. Project Approval. The Mode S project, which is being implemented with the applicable provisions of Order 1810.1E as a general guide, has completed key decision point #4 of the order. The key decision memorandum, which outlined the Mode S project, was approved by the FAA System Acquisition Review Committee (SARC) and submitted to TSARC. In March 1983, the TSARC approved Mode S for national implementation. An amended Mode S Acquisition plan is being coordinated and is planned for substitution for approval during 2nd quarter CY92. The source selection process was initiated and the Mode S system contract was awarded in October 1984.

b. Acquisition Strategy. The approved project provides for 137 Mode S systems. In general, the systems are comprised of 137 Mode S sensors, 274 CPME's (two per site), 13 Mode S Shelters, 111 open array antennas for the terminal radar sites, 26 dual open array antenna systems for the en route radar sites, and an appropriate number of rotary joints for all of the sites.

c. Procurements.

(1) Mode S Sensors. The 137 Mode S sensors and associated software are currently under procurement. The contract includes the procurement of CPME's and equipment shelters for certain ASR-7 and ASR-8 sites and Beacon-Only Site (BOS) use.

(2) Terminal Antennas. Open array antennas have been procured and installed at 111 terminal radar sites, under a separate contract.

(3) En Route Antennas. Back-to-back (dual) open array antenna systems are currently under procurement for 26 en route radar sites. The contract includes procurement of 100 single array beacon antennas for use at ARSR-4 radar sites.

(4) Terminal Rotary Joints. Mode S-compatible rotary joints for the terminal sites, with dual 12-bit/14-bit azimuth encoders, have been procured for 24 ASR-7 and ASR-8 sites, under a separate contract (ASR-9 rotary joints are Mode S-compatible).

(5) En Route Rotary Joints. Mode S-compatible rotary joints for the en route radar sites, also with dual 12-bit/14-bit azimuth encoders, are currently under procurement. The

procurement will provide four different types of rotary joints, for the ARSR-1E, ARSR-2, FPS series radars and for the BOS.

(6) Radomes. Replacement radomes for en route sites, under a separate pending procurement, will alleviate mounting and radiation distortion problems and allow all antennas to be mounted back-to-back on top of the surveillance antenna.

(7) Modems. Modems required to transmit data to and from various associated systems, will be provided under a separate contract(s). The contract(s) will provide for installation and for all necessary ancillary equipments. This procurement will be part of National modem procurement managed by ANC-140, Interfacility Communication Program. The current planning is to provide codex modems.

d. Support Requirements. Facility modifications, in particular air-conditioning and standby power expansion, are being provided under the Technical Support Services Contractor (TSSC) contract with program funding.

e. Flight Advisory Data Link. Initially, Mode S will provide non-ATC flight advisory data link messages provided by the DLP. The messages consist of weather, environment, and flight related services.

f. Interface Definition. Interface Control Documents (ICD) will be provided for each combination of primary radar, Mode S, and ATC facility. Level II ICD germane to this program are:

(1) Mode S to ATC communications link.

(2) Mode S to non-ATC communications link.

(3) Mode S to ASR-7/ARTS-2A terminal sites.

(4) Mode S to ASR-8/ARTS-2A terminal sites.

(5) Mode S to ASR-9 terminal sites.

(6) Mode S to RMMS (ICD Level II).

(7) Mode S to Common Digitizer (CD), Model CD-2, as co-located at the following radar sites: ARSR-1, ARSR-2, FPS-20, FPS-66, and FPS-67.

(8) Mode S/ATC surveillance link to ATC en route facilities.

(9) Mode S to local terminal.

(10) Interrogator to DPS.

41. MILESTONE SCHEDULE SUMMARY.

a. General. Although a high level of continuous activity is customary in a major system acquisition, certain milestones are particularly significant.

b. Contract Award. Contract award is the objective and the end product of the source selection process. The date is significant in that all contract items are scheduled from Date of Contract (DOC). The Mode S sensor contract was awarded October 5, 1984, for 137 systems.

c. Design Review. The JV contractor submitted his/her design to FAA for review and comment. Generally, the Preliminary Design Review (PDR) process involves extended meetings and changes in the design. The modified design was resubmitted to the FAA for final Critical Design Review (CDR) prior to committing significant resources to production of deliverable equipment.

d. Factory Testing. The first four Mode S systems are subjected to rigorous inspection and testing in the factory before delivery. These tests include performance, general characteristics, environmental, reliability and maintainability. The FAA is represented during factory tests by the Quality and Reliability Officer (QRO). The first system, with Software Release 1.1 (to support a terminal sensor), was delivered to the ASR-9 facility at the FAA Technical Center in July 1991.

e. FAA Technical Center Tests. The first Mode S sensor was delivered and installed at the FAA Technical Center by the contractor. It is being integrated into the primary radar environment and is undergoing final onsite tests. After acceptance from the contractor, the FAA Technical Center will conduct a series of performance and operational tests and evaluations. These tests are performed to verify that the Mode S sensor operates effectively within the NAS.

f. Installation and Commissioning Schedules. The Mode S system commissioning will follow deliveries by about 4 months. During this time, they will be contractor installed, tested, integrated into the radar system, and flight checked.

g. Training. The contractor will conduct the first Mode S maintenance training course scheduled to begin in January 1992.

h. Provisioning. A provisioning conference is to be held within 30 days after approval of the provisioning parts list. The FAA will initiate procurement for an agreed-to list of spare parts after the conference.

i. Mode S Antenna and Rotary Joint Schedule. The contract for the back-to-back en route antennas and rotary joints was awarded in 1987; deliveries are currently underway.

j. Flight Advisory Data Link Schedule. The test and evaluation of the DLP data link will be conducted at the FAA Technical Center, with the first Mode S sensor, beginning in 1993. Field implementation will commence in 1993, adding data link to those Mode S facilities previously installed and implementing data link concurrently with installation of later systems.

k. Detailed Schedules. Current schedules applicable to the Mode S sensor have been consolidated in appendix 2. Updates to the schedule is provided in the event of changes by the Master Delivery Forecast Module (MDFM). Revisions which are necessary to meet changing requirements or priorities will be coordinated with cognizant regional Air Traffic (AT) and Airway Facilities (AF) divisions prior to issuance.

42. INTERDEPENDENCIES AND SEQUENCE. Implementation of Mode S will be dependent on prior installation of such systems and equipments as antennas, rotary joints, equipment shelters, radomes, modems (at all sites), engine generators (EG), and (b) the upgrading of power distribution systems and air conditioning (AC) systems, depending on whether the site is a terminal radar site, an en route radar site, or a BOS.

a. Terminal Radar Sites. Implementation will be dependent on the installation of modified Airport Surveillance Radar (ASR) (Mode S-compatible) rotary joints at ASR-7 and ASR-8 sites. It will also be dependent on the installation of 75KW EG, power distribution system upgrades, and AC upgrades at certain ASR-7 and ASR-8 sites (see tables 7-1 through 7-3).

b. En Route Radar Sites. Implementation will be dependent on installation of the back-to-back antennas and rotary joints and the new radomes. Attempts will be made to install the antennas and rotary joints at the same time that the radomes are installed, thereby reducing radar down-time.

c. BOS's. Implementation at these sites will also be dependent on installation of the back-to-back antennas and rotary joints and the new radomes. Attempts will also be made to install the antennas and rotary joints at the same time that the radomes are installed, thereby reducing radar down-time.

d. Mode S Interim Monitor Control System. The interim monitor control system is being developed by ASM-400 and will be installed on the Mode S Interrogator.

43.-49. RESERVED.

CHAPTER 5. PROJECT MANAGEMENT

50. PROJECT MANAGEMENT, GENERAL.

a. Program Structure/Administration. The Mode S program is under the auspices of the Program Director for Surveillance, ANR-1. The Mode S Program Manager (PM) is ANR-300, and has first line responsibility for the design, development, testing, evaluation, production, and introduction into the NAS of the end products of the Mode S project. He/she keeps the Administrator informed on project status, in accordance with Order 1810.1E.

(1) Matrix Management. Matrix management will be used by the PM, who is the single focal point for all program activities, to monitor such specific areas as contractor performance and program implementation. The PM will utilize personnel from various FAA organizations to support program requirements, within the guidelines provided by FAA policies, procedures, and directives. While there will be distinct lines of authority with regard to achieving program goals, informal communication and support among responsible program personnel will play a vital part in achieving the successful implementation of Mode S.

(2) PM/Associate Program Manager Concept. Supporting the PM are Associate Program Managers. These will include headquarters Associate Program Managers from within ANR-100, Surveillance Engineering Division, and from various principal participating FAA organizations, and Associate Program Managers from the nine FAA regions. The Associate Program Managers serve as focal points in their respective spheres for the implementation of Mode S. Each Associate Program Manager is responsible for coordinating and reporting on all areas of responsibility assigned to him/her by the PM and on those efforts associated with that organization's and/or region's stated mission. The Associate Program Managers are empowered by the management of the organizations they represent to make decisions and commitments for that organization relating to the Mode S program. Major areas of concern to the Associate Program Managers include planning, budgeting, and implementation.

(3) Other Agencies and Contractor Personnel. Where appropriate, the Mode S program utilizes the services of other agencies and contractor personnel. The personnel supporting the Mode S program require the cooperation and assistance of the FAA to perform their services. Appendix 3 lists the outside contractors providing technical support to the program. Table 5-1 shows the program management structure.

b. Key Individuals. Key individuals associated with the Mode S program are depicted in table 5-1.

Table 5-1. MODE S PROJECT MANAGEMENT STRUCTURE

Program Director
ANR-1

Program Manager
ANR-300

Associate Program Manager for Engineering (APME), ANR-130	Associate Program Manager for Contracting (APMC), ASU-320
Associate Program Manager for Testing (APMT), ACN-220	Associate Program Manager for General Counsel (APMGC), AGC-510
Associate Program Manager for Quality (APMQ), ASU-421	Associate Program Manager Logistics (APML), ANS-420
Associate Program Manager for Systems Engineering (APMSE), ASE-300	Associate Program Manager Systems Maintenance (APMSM), ASM-420
Associate Program Manager ATC Requirements (APMR), ATR-320	Associate Program Manager ATC Procedures (APMP), ATP-130
Associate Program Manager Alaskan Region (APMAL), AAL-420	Associate Program Manager Central Region (APMCE), ACE-425
Associate Program Manager Eastern Region (APMEA), AEA-451.1	Associate Program Manager Great Lakes Region (APMGL), AGL-421.5
Associate Program Manager New England Region (APMNE), ANE-422N	Associate Program Manager Northwest Mountain Region (APMNM), ANM-422
Associate Program Manager Southern Region (APMSO), ASO-422	Associate Program Manager Southwest Region (APMSW Terminal), ASW-421
Associate Program Manager Western-Pacific Region (APMWP), AWP-422	Associate Program Manager Southwest Region (APMSW En Route), ASW-455

(2) Matrix Team Associate Program Managers. Associate Program Managers have been assigned from within FAA headquarters and the FAA Technical Center and are listed in table 5-1.

(3) Regional/Aeronautical Center Associate Program Managers. Associate Program Managers have been assigned and are also listed in table 5-1.

(4) Other.

(a) Technical Officer (TO), appointed by the PM.

(b) Technical Onsite Representative (TOR), appointed by the regional AF Division Manager.

(c) Test Director (TD), appointed by ACN-200.

(d) QRO, appointed by the APMQ.

c. Responsibilities.

(1) PM. The following are responsibilities of the PM:

(a) Has the first line responsibility for the design, development, production, testing, evaluation, and introduction of Mode S into the NAS.

(b) Develops the program master plan, the management plan, and the PIP.

(c) Develops the program and budget justification documentation, including that for Research and Development (R&D), Facilities and Equipment (F&E), and Operations (OPS).

(d) Controls program funds within approved appropriation levels.

(e) Manages the program within approved cost, scheduling, and technical baselines.

(f) Informs upper level management of program status, issues, and accomplishments.

(g) Co-chairs the Source Evaluation Board (SEB), if one is established.

(h) Serves as the agency spokesman, advocate, and focal point for the program.

(i) Plans and implements the transition from F&E to OPS.

(j) Presents Procurement Readiness Review (PRR), Deployment Readiness Review (DRR), and Project Status Review Board (PSRB).

(k) Determines acquisition and deployment strategies in coordination with applicable organizations.

(l) Establishes the PM team structure and guidelines to ensure that such program activities as plans, baselines, travel, and correspondence are properly coordinated and controlled.

(m) Obtains all necessary program approvals.

(n) Develops and maintains agreements with matrix organizations, and formally documents them in program directives.

(o) Holds Associate Program Managers accountable for accomplishments in accordance with directive agreement.

(p) Provides inputs on core Associate Program Managers performance evaluation for Associate Program Managers assigned by program directives and others, as appropriate.

(q) Ensures the quality of all PM documentation.

(r) Provides program guidance to all offices, services, the Aeronautical Center, FAA Technical Center, and the regions.

(s) Ensures the timely implementation of the Mode S into the operational environment in a manner that minimizes costs and optimizes system performance.

(t) Identifies ANR requirements and requests staffs for the offices of appropriate services as necessary to support the installation and test efforts of the Mode S.

(u) Prepares, analyzes, and distributes scheduling information to services and Regional Administrators, FAA Logistics Center, FAA Technical Center, etc.

(v) Ensures the baseline configuration for the

Mode S and provides suitable documentation to appropriate offices upon transition to operational status.

(w) Provides planning and guidance information to all activities which interface with Mode S for the timely implementation of support activity.

(x) Provides site preparation requirements to the regions and FAA Technical Center for monitoring the accomplishment of site activities leading toward the completion and acceptance of the site installations.

(y) Is responsible for factory and field acceptance testing.

(z) Provides technical oversight and/or direction to the contractor in the design, development, production, testing, installation, integration, and documentation of hardware and software for Mode S.

(aa) Ensures the development of Mode S maintenance requirements and coordinates with the Maintenance Operations Division, ASM-200, through the NAILS Management Team.

(bb) Coordinates with the region(s) for scheduling and monitoring installation, dismantling, and/or disposal of equipment in accordance with Order 4800.2B, Utilization and Disposal of Excess and Surplus Property.

(cc) Ensures the availability of all software and hardware interfaces required for Mode S implementation.

(dd) Ensures the availability of a Mode S shakedown test plan and procedure.

(ee) Develops the Letter of Agreement (LOA) as per Order 6090.1, Development and Implementation of Remote Monitoring Subsystem (RMS) within the NAS, for the Mode S RMS.

(ff) Ensures the availability of all required funding and maintains the contract within budget limitations.

(gg) Determines the distribution of all Mode S documentation, both in-house and contractual.

(hh) Ensures that logistic support requirements in coordination with the Aeronautical Center are planned, funded, and delivered in time to permit effective operational use of Mode S.

(ii) Budgets and funds for all National Airspace Integrated Logistics Support (NAILS) requirements.

(jj) Funds, supports, and co-chairs the NAILS Management Team (NAILSMT).

(kk) Provides necessary inputs and assistance to the services and Regional Administrators for training of maintenance personnel.

(ll) Ensures the development of performance, maintenance, and calibration standards and procedures for Mode S.

(mm) Assists in, and ensures the development of, system operational changeover plans with Air Traffic Plans and Requirement Service (ATR) and the regions.

(nn) Provides configuration management support for the Mode S via the Configuration Control Board (CCB) and Mode S Program Planning Groups.

(oo) Resolves all issues emanating from installation, checkout, and integration of Mode S into the NAS.

(2) APME. The following are responsibilities of the APME:

(a) Serves as TO or the Alternate Technical Officer (ATO), or delegates the authority, as appropriate.

(b) As TO, or ATO, is responsible for all technical aspects of the design, production, testing, delivery, and management of the Mode S turnkey installations.

(c) As TO, or ATO, is also responsible for all aspects of field implementation and will maintain close liaison with the contractor's installation teams in the regions by providing technical guidance and direction within the scope of the contract.

(d) Selects and supervises staff personnel, and assigns the technical staff to the project, as required.

(e) Provides for the management and accomplishment of program directives.

(f) Ensures the quality and technical integrity of the project.

(g) Manages the workload and ensures workforce effectiveness.

(h) Serves as the first-line technical advocate for the program.

(i) Ensures, through FAA Joint Radar Planning Group Co-chairman, military approval for all planned changes to Joint Surveillance Radar Systems resulting from Mode S program.

(3) APMC. The following are responsibilities of the APMC:

(a) Solicits, negotiates, awards, and administers contracts for the PM.

(b) Conducts all communications, including discussions and negotiations, with the contractor.

(c) Determines what procurement information can be released.

(d) Serves as co-chairman of the SEB, if one is established.

(e) Performs cost or price analyses and determines cost and price reasonableness.

(f) Identifies conflicts of interest and prepares any resulting avoidance, neutralization, or mitigation plan.

(g) Awards and administers contracts, including contract changes, options, etc.

(h) Delegates authority to appropriate officials to accept deliverables under the contract.

(i) Ensures that no contract or change to a contract is signed unless all requirements of law, executive orders, regulations, and all other applicable procedures, including clearances and approvals, have been met and that contractors receive fair and equitable treatment.

(j) Responds to requests under the Freedom of Information Act related to the contract.

(k) Confirms appointments of QRO's for the contract.

(4) APMT. The following are responsibilities of the APMT:

(a) This position is assigned to the FAA Technical Center. The roles and responsibilities of the APMT are outlined in Order 1810.4A, FAA NAS Test and Evaluation Program.

(b) Serves as the TD for Mode S.

(c) Prepares all test plans and documents, other than those prepared by the contractor, required for the test and evaluation (T&E) of Mode S.

(d) Develops operational test and evaluation (OT&E) and NAS integration test plans and procedures, and directs the conduct of the above tests.

(e) Coordinates all phases of Government testing, and all test activities through first-site implementation.

(f) Serves as the main focal point for all testing, from beginning to end.

(g) Serves as a member of the NAILSMT.

(5) APMGC. The following are responsibilities of the APMGC:

(a) Serves as legal counselor to the program team, and provides advice on legal questions and business judgments.

(b) Provides input to contractual documents to ensure clarity and proper legal defense.

(c) Assesses legal risks and recommends alternative courses of action to accomplish program objectives.

(d) Represents the PM on legal issues with contractors.

(e) Represents the federal interest.

(6) APMQ. The following are responsibilities of the APMQ:

(a) Ensures in-plant Quality Assurance (QA) at the contractors' and subcontractors' facilities and at performance locations.

(b) Acts as the central point of contact for all quality assurance related issues.

(c) Ensures that all QRO duties are carried out.

(d) Assures that the contractor/subcontractor(s) adhere to QA requirements.

(e) Ensures that contractors' requests for progress payments are reviewed, and that appropriate payment/nonpayment recommendations are made, as appropriate.

(f) Reviews various documents concerning proposed changes, test plans, schedules, etc. and makes recommendations, as appropriate.

(7) APML. The following are responsibilities of the APML:

(a) Advises the PM on all areas of NAILS.

(b) Establishes and co-chairs the NAILSMT.

(c) Coordinates all Integrated Logistics Support (ILS) activities of support organizations, and ensures that each support organization designates an element manager to the NAILSMT.

(d) Develops the Integrated Logistics Support Plan (ILSP) for the PM.

(8) APMSE. The following are responsibilities of the APMSE:

(a) Addresses system issues associated with requirements for the program and interfaces with the entire NAS.

(b) Performs NAS requirements analyses.

(c) Analyzes and defines alternate means of satisfying requirements.

(d) Develops and specifies system-level performance characteristics.

(e) Develops mission needs statements.

(f) Reviews specifications, Statements of Work (SOW), test plans, change proposals, and other subsystem documentation.

(g) Provides subsystem technical support and analyses.

(h) Manages the development, quality, and content of interface requirements documents.

(i) Conducts Reliability, Maintainability, and Availability (RMA) analyses and allocates RMA requirements to NAS elements.

(j) Develops security standards and conducts electronic vulnerability analyses of NAS subsystems.

(k) Develops NAS T&E verification and test matrices.

(l) Develops system standards for the acquisition, design, and documentation of NAS subsystems.

(m) Maintains baseline descriptions of systems, facilities, equipment, etc. of current and proposed NAS elements.

(n) Develops configuration management requirements, practices, procedures, and policies.

(o) Plans and conducts physical and functional configuration audits of NAS subsystems.

(p) Coordinates and obtains support for the PM concerning any operations research needs of the program (for example, cost benefit analyses).

(q) Obtains, as required, support from facility system engineering for the program.

(9) APMR. The following are responsibilities of the APMR:

(a) Evaluates questions concerning AT requirements.

(b) Supports operational T&E.

(c) Provides inputs into acquisition strategies with the PM to ensure that the acquisition meets AT requirements.

(d) Provides coordination with AT field elements.

(e) Supports justification of funding.

(10) APMP. The APMP is responsible for determining and publishing the AT procedures and regulations appropriate for supporting the program.

(11) APMSM. The following are responsibilities of the APMSM:

(a) Provides second-level field support for the Mode S System.

(b) Provides maintenance of the operational software and hardware baseline.

(c) Integration of new software/hardware into the baseline, providing quality assurance, integration testing, deployment and hardware and software support of field elements.

(d) Provides coordination with regions onsite preparation, shakedown testing, etc. prior to commissioning.

(e) Coordinates with other program managers within the Systems Maintenance Service (ASM), as required.

(12) Associate Program Managers for Regions. The following are responsibilities of the Associate Program Manager for each region:

(a) Planning.

1. Coordinates (and develops, if necessary) regional and facility implementation and transition plans.

2. Assesses project and program interdependencies and coordination requirements.

3. Facilitates the development of training requirements by the identification of regional/facility training needs and coordination with the appropriate service.

4. Chairs planning briefings and meetings, and prepares reports as necessary.

5. Provides regional inputs to headquarters PM's for planning purposes.

6. Represents the region in program-level national workshops and meetings.

7. Represents the region during national DRR's, and conducts regional DRR's as necessary.

8. Coordinates and participates in engineering studies, requirement reviews, site surveys, and site selections, as necessary, to determine specific regional requirements and scope of work for each individual project.

9. Ensures that funding is adequate, that job order numbers are assigned, and that the scope of work for each individual project is properly defined and disseminated.

(b) Budgeting.

1. Participates in the development and annual revision of items for the CIP.

2. Participates in the review and coordination of the national Call for Estimates (CAE), and participates in the development of the regional CAE.

3. Provides regional inputs to headquarters PM's for budgeting purposes.

4. Ensures that valid and timely cost estimates are developed that address the total regional requirements.

5. Ensures that budget submissions are well-justified and contain complete material lists.

6. Maintains awareness of budget items and the status of validated versus non-validated projects.

(c) Implementation.

1. Establishes working relationships with headquarters PM's.

2. Serves as a regional focal point for the F&E programs, including such areas as planning, budgeting, funding, logistics support, training, test equipment, deployment readiness, installation, capitalization, maintenance, and operation.

3. Identifies and disseminates the scope of the programs and the regional and national turnkey contractor responsibilities.

4. Chairs progress briefings and meetings, and prepares reports as necessary.

5. Coordinates requirements for logistics support, leased services, real estate, and utilities.

6. Represents the region in program-level national workshops and meetings.

7. Reviews and validates project authorizations.

8. Develops a generic Regional Project Management System (RPMS) network for each project, and populates and maintains each network in accordance with the best available anticipated equipment delivery date.

9. Coordinates all implementation activities based on the program implementation plan.

10. Tracks funding obligations versus project accomplishments through the RPMS, identify funding shortfalls and surpluses, and recommend solutions.

11. Provides cost estimates and justifications as necessary for submission with the quarterly fiscal summary review and request for funding adjustments.

12. Tracks and reports on milestone accomplishment for each individual project, including such areas

as project authorization, equipment availability, site preparation, initial operating capability, and facility commissioning and capitalization.

13. Facilitates resolution of problems and develops recommendations for the Facilities Review Board (FRB).

14. Reviews Joint Acceptance Inspection (JAI) reports and facilitates the resolution and closing of exceptions.

15. At the conclusion of major projects, chairs a critique to identify problems that can be avoided in future programs, and documents and implements needed changes.

(13) Associate Program Manager Academy (APMA). The following are responsibilities of the APMA:

(a) Coordinates all FAA training activities, both at the FAA Academy and at any other required locations.

(b) Provides for the technical evaluation of the contractor's training procedures and material.

(14) Associate Program Manager Depot (APMD). The following are responsibilities of the APMD:

(a) Coordinates all provisioning and logistics support activities.

(b) Manages all depot-level maintenance, whether performed by the FAA or the contractor.

(15) TO. The following are responsibilities of the TO:

(a) Is responsible for all technical aspects of the contractor's efforts to design, produce, test, deliver, and manage the Mode S turnkey installations.

(b) Is responsible for all aspects of the contractor's field implementation, maintaining close liaison with the contractor's installation teams in the regions by providing technical guidance and direction within the scope of the contract.

(16) TOR. The following are responsibilities of the TO's representative:

(a) Ensures that activities required in support of the Mode S contract installation and testing are accomplished in an orderly manner.

(b) Is responsible for communication and coordination, in support of the responsibilities of the TO.

(c) Submits weekly technical reports to the TO, describing progress at each Mode S site within the region.

(d) Submit Telecommunications Service Requests (TSR) for communications between the Mode S and the ARTCC DLP.

(17) QRO. The following are responsibilities of the QA representative:

(a) Provides in-plant QA at the contractors' and subcontractors' facilities and at performance locations.

(b) Assures that the contractor/subcontractor(s) adhere to QA requirements.

(c) Accepts or rejects systems, equipment, and materials in accordance with contract requirements.

(d) Reviews contractors' requests for progress payments and makes recommendations, as appropriate.

(e) Reviews various documents concerning proposed changes, test plans, schedules, etc, and makes recommendations, as appropriate.

51. PROJECT CONTACTS. Primary points of contact for the Mode S program are included in Table 5-2, Mode S Project Contact List.

Table 5-2. MODE S PROJECT CONTACT LIST

Title	Office	Individual	Telephone	FAX
Matrix Team Associate Program Managers				
Acting Prog Mgr	ANR-300	Byron Johnson	202-606-4644	FTS 266-4286
APME	ANR-130	Byron Johnson	202-606-4644	FTS 266-4286
APMC	ASU-320	Steve Brown	202-606-4516	FTS 266-4530
APMT	ACN-220	Bill Swanseen	FTS 482-5392	FTS 482-5126
APMG	AGC-510	George Kinsey	202-267-7368	FTS 267-7257
APMQ	ALG-421	Viola Jones-Ukiwe	301-765-1536	301 765-8799
APML	ANS-420	Chuck Gould	FTS 267-7074	
APMSE	ASE-300	Doug Hodgkins	202-646-4818	202 646-5719
APMR	ATR-320	Jim O'Malley	202-267-8760	FTS 267-9199
APMP	ATP-130	Larry Utterback	202-267-9320	FTS 267-5120
APMSM	ASM-420	Harry Brown	FTS 482-4249	FTS 482-4235
Matrix Team Regional Associate Program Managers				
APMAL	AAL-420	Bill Weeks	907-271-5199	907 276-4631
APMCE	ACE-425	Leland Riffel	FTS 867-5676	FTS 867-3603
APMEA	AEA-451.1	Mark Miglietta	FTS 667-1200	718 656-6610
APMGL	AGL-422.2	Jack Albrecht	FTS 384-7591	FTS 384-7545
APMNE	ANE-422N	Bruce Ng	FTS 836-7211	617 273-1339
APMNM	ANM-422	Darby Curran	FTS 392-2434	FTS 392-1420
APMSO	ASO-422	James Garrett	FTS 246-7371	FTS 246-7652
APMSW Terminal	ASW-421	Bill Kolp	FTS 734-5474	FTS 728-3289
APMSW En Route	ASW-455	Larry Young	FTS 734-5359	FTS 728-3289
APMWP	AWP-422	Bradford Gee	FTS 984-1078	FTS 984-0419

52. PROJECT COORDINATION. The following subparagraphs provide a brief overview of program support groups and their responsibilities to assist the PM in managing all aspects of the program:

a. Headquarters Associate Program Managers. These Associate Program Managers provide required support to the PM within their areas of responsibility.

b. Regional Associate Program Managers. These Associate Program Managers serve as focal points in their respective regions for all Mode S implementation activities. As the PM's regional representatives, they work closely with the PM and the

APME (TO). They are designated by the regional AF division manager and are accountable for ensuring that the Mode S is implemented in an orderly manner. The Associate Program Manager's tasks include, but are not limited to, the following:

(1) Coordinate/manage regional deployment activities.

(2) Provide guidance and direction to the FAA site personnel.

(3) Provide inputs and periodic technical reports describing the deployment progress at each site to the TO.

(4) Coordinate with AT as required, for test activities associated with the operational ATC systems.

(5) Notify the JAI Board Chairman of JAI readiness and conduct integration of the Mode S into the NAS (reference Order 6030.45, Facility Reference Data File) and ensure the AF sector manager or appropriate representatives are present.

(6) Review and approve contractor's Site Engineering Report (SER).

c. TOR. A TOR is assigned to each site by the appropriate regional AF division manager. This position is the interface between the contractor and AF sector personnel. A 2-day session on TOR duties is to be provided for the assigned TOR;s. In addition a Mode S TOR guidance package will be provided. Tasks include, but are not limited to, the following:

(1) Assisting the contractor during site surveys.

(2) Providing inputs to logistics planning activities as they relate to site requirements.

(3) Recording site performance data prior to beginning the installation.

(4) Providing assistance in direction and guidance to the contractor to efficiently and timely accomplish site preparation, installation, testing, and evaluation for the Mode S.

(5) Witnessing the site preparation, installation, and testing.

(6) Participating in testing and integration into NAS.

(7) Completing the FAA Form 256, Inspection Report of Material or Services, for Mode S acceptance.

(8) Assisting in system field testing in accordance with the requirements of the test plans for the Mode S.

(9) Participating in the JAI.

(10) Arranging for contractor site access.

(11) Maintaining installation logs and submitting installation status reports, based on log entries, to the TO.

d. Configuration Control Board (CCB). In accordance with Order 1800.8F, NAS Deployment Readiness Review, the CCB is the official agency-authorized forum to approve or disapprove baselines and changes to baselines. There is a central NAS CCB to establish and control baselines and to administer configuration control. From this CCB, authority is delegated to lower level CCB's to effectively administer proposed changes at the most appropriate level. All lower level CCB's will be accountable to the NAS CCB which has been established through a charter defining its authority, responsibilities (including the specific documents over which the CCB has control), and membership. Decisions and directions are documented in Configuration Control Decisions (CCD), which either approves, disapproves, defers, or refers the change request to another CCB. When contractual action is required, the CCD serves as a basis for the preparation of a procurement request which is submitted to the contracting officer. The CCD may also be distributed to other Government agencies and serves as an official notification of CCB action. Representatives on the CCB are to include the various agency services/offices that have responsibilities to acquire, support, and operate the system. Other representatives may be invited to attend as required.

e. Telecommunications Management and Operations. Interfacility telecommunications requirements should be directed to ASM-300, which manages FAA telecommunications at the national level. ASM-300 will determine the general networking approach that will best meet the communications requirements and coordinate this information with the regional Telecommunications Management and Operations (TM&O) organizations to implement the networks and circuits required.

53. PROJECT RESPONSIBILITY MATRIX. The Mode S Project Responsibility Matrix is shown in table 5-3.

TABLE 5-3. MODE S PROJECT RESPONSIBILITY MATRIX

TASK/PLAN/ACTIVITY	PRIMARY OFFICE	SUPPORTING OFFICE
Project Management and Control	Mode S Program Manager	All
NAS Implementation of Mode S	ANR-130, Regions, Contractor	FAA, SEI, ACN
Financial Management	ANR-130	Regions
Record Facility Reference Data File (FRDF)	TOR	ANR-130
Site Selection (CPME)	Regions	ANR-130, TSSC
Installation of Mode S	Contractor	Regions, ANR-130
Site Survey	Contractor	Regions, ANR-130
Acceptance Test/JAI	Contractor, TOR ANR-130	ANR-130, AAT ACN-200
System Integration/Testing	ACN-200 TOR ACN Personnel, Contractor	ANR-130, AAT
System Shakedown Testing	ASM-400, ANR-130	AAT, ACN, QRO Regions
Site Specific Map Generation	ASM-400	ANR-130, Regions
Maintenance Staffing	ASM-200	ANR-130, Regions
RMS	ANR-130, ANA-160	SEI, ACN
Maintenance Training Development	AAC-900 Contractor ASM-200	AHT, ANR-130, Regions, SEI
Configuration Management	ASE-600, ASM-400	AAT, ACN, SEI, ASU

TASK/PLAN/ACTIVITY	PRIMARY OFFICE	SUPPORTING OFFICE
Operational Integration	AAT, ANR-130	Regions, ASM-400,ACN-200
Contract Administration	ASU-300	ANR-130, Regions
Technical (overall)	ANR-130	All
Technical (Field)	Regions, AAC ASM-400	ASM-100, ACN-220
Logistic Support	AAC, ASU-300, ANR-130, ANS-Contractor	ASM-100, SEI
Site Preparation	Regions	TSSC, ANR-130
Training Requirements	ASM-200/250	Regions, SEI
TM&O	ASM-300	Regions

54. PROJECT MANAGERIAL COMMUNICATIONS. To maintain effective and responsible control of overall Mode S progress, reviews, conferences and working sessions will be held among the PM, Associate Program Managers, TO, TOR's, and the contractor. Participation in these conferences and working groups by various FAA offices will be requested at the discretion of the PM. In addition, routine status reports will be required.

55. IMPLEMENTATION STAFFING. The following personnel are responsible for the implementation of the Mode S Program:

a. PM. The Program Director for Surveillance (ANR-1), has designated ANR-300 to serve as PM for the Mode S Program.

b. TO. The PM has designated a member of ANR-130 as TO for the Mode S contract. The TO will be responsible for all aspects of design, production, testing, delivery, installation, NAS integration and management of the Mode S turnkey contract. The TO is also responsible for all aspects of field implementation and will maintain close liaison with regional TOR's and contractor's installation teams in the regions.

c. Regional Associate Program Managers. These Associate Program Managers serve as focal points for all regional Mode S activities, including site preparation.

d. TOR. The TOR is designated by the regional AF division to ensure that activities required in support of the Mode S installation are accomplished in accordance with the contract and the Government's interest is fully protected. The TOR will submit weekly technical reports to the TO describing progress in each site within the region. A 2-day seminar has been provided to the TOR's; the first being June 9 and 10, 1992. A TOR Handbook for Mode S is also being prepared and a copy will be provided each TOR.

e. TD. The TD is appointed by ACN-200, the Communications/ Navigation/Surveillance Division of the Test and Evaluation Service, to coordinate all phases of FAA testing, to develop OT&E and NAS Integration Test Plans and Procedures, and to direct the conduct of the above tests.

56. PLANNING AND REPORTS. The successful implementation of the Mode S Program will be monitored by the use of the following:

a. Program Status Review Boards. The PM will brief higher level management on the status of program schedules, cost information, and technical topics. These reviews provide for top-level management control of the program. The PM may request the support of functional or contractor organizations in providing status and information on specific program topics.

b. Contractor Progress Reports. The contractor will apprise the FAA on a monthly basis of their assessment of contractual effort, work scheduled for the next period, and special problem areas, including proposed solutions.

c. Configuration Control and Status Accounting Report. Provide data needed to identify configuration identification and determine the status of change proposals, deviations and waivers, including implementation status.

d. Implementation Working Group. This group will meet periodically at FAA headquarters in Washington, DC, or other agreed to locations to address both program issues and specific functional activities. Membership consists of the PM and the headquarters TO. Other offices will be asked to participate as required. Action items generated at these meetings will be resolved by the program office or representatives from functional areas. Minutes of each meeting will be distributed to attendees and include a summary of the topics discussed and description of all action items/resolutions.

e. TOR's. These conferences will be scheduled as necessary. These meetings are attended by TOR's from each region, the TO, and representatives from headquarters organizations. The conferences provide a forum to discuss and resolve program issues of special interest to the regions. Action items generated at these conferences focus on regional concerns and are resolved by the TO and designated TOR's or representatives from functional areas.

f. Design Reviews. Design reviews between ANR-130 and the Mode S contractor will be held at scheduled times. These reviews include the PDR, and the CDR, both of which have been completed. Other project design reviews addressing specific Mode S activities are being convened on a monthly basis. Participating organizations will be notified in advance on the date, time, and location by the PM. ANR-130 may be represented by the TO.

g. Regional Status Reporting. Weekly status reports regarding technical progress will be submitted to the TO by each TOR. Routine reporting, as well as responses to specific issues/requests, will be addressed in these reports.

h. Quality and Reliability. The QRO issues biweekly reports addressed to the contracting officer with a copy to the TO. The format and content of these reports are established by ASU-400 as stated in Order 4453.1B Quality Assurance of Material Procured by FAA.

i. Installation Phase Documentation. The basic documentation required are the installation log and weekly installation status reports. These are described as follows:

(1) Installation Log. The TOR will maintain a project log and make entries documenting the installation status, activities, and events for each site. Entries will be made for visits to the site, communications, coordination, and other pertinent information having an impact on the contract. Items of consequence not adequately covered by written documents shall be included in the log (e.g., unusual physical conditions encountered, oral protests, design deficiencies noted and actions taken, cause and extent of delays, etc.). The complete and factual entries will be made at the time of occurrence. Upon completion of the contracted work, the TOR will forward the log to the TO.

(2) Weekly Installation Status Reports. These reports are designed to ensure that the contracting officer, regional divisions, and the PM are abreast of the progress and/or problems

each week at each location. The weekly status report will be prepared and distributed by the TOR, and will be supplied to the regional Associate Program Managers, as a minimum.

57. APPLICABLE DOCUMENTS.

a. FAA Documents.

DTFA01-85-C-00002	Contract for Mode S
FAA-E-2716	Specification for Mode Select Beacon System Sensor (Mode S)
DOT/FAA/CT-TN89/51	The Mode S Operational Test and Evaluation/Integration Test Plan
	Integrated Logistics Support (ILS) Plan for Mode S
	Mode S Site Installation Plan
	Mode S Site Test Procedures
	Mode S Training Plan
0A8200.1	United States Standard Flight Inspection Manual
N-ADS-91-003-R-02	TSSC Mode S Work Plan

b. FAA Orders.

1000.1A	Policy Statement of the Federal Aviation Administration
1100.1A	FAA Organization - Policies and Standards
1100.2C	FAA Organization - FAA Headquarters
1100.5C	FAA Organization - Field
1800.8F	National Airspace System Configuration Management
1800.13C	Planning and Resource Allocation
1800.8F	NAS Deployment Readiness Review
1800.58	National Airspace Integrated Logistics Support Policy
1800.63	National Airspace System (NAS) Deployment Readiness Review (DRR) Program
1810.1E	Major Acquisitions
1810.4A	FAA NAS Test and Evaluation Program
4800.2B	Utilization and Disposal of Excess and Surplus Property

6000.30B	Policy for Maintenance of NAS through the Year 2000
6000.38	Policy to Determine NAS Equipment Initial Sparing Requirements for Airway Facilities Work Centers Locations and Field Locations
6030.45	Facility Reference Data File
6090.1	Development and Implementation of RMS within the National Airspace System (NAS)

c. FAA Forms.

256	Inspection Report of Material or Services
6030.18	Joint Acceptance Inspection Cover Sheet
6030.19	Joint Acceptance Inspection Report Check List
6030.20	Joint Acceptance Inspection Report Check List
6030.21	Joint Acceptance Inspection Report Check List
6030.22	Joint Acceptance Inspection Report Check List
6030.23	Joint Acceptance Inspection Report Check List
6030.24	Joint Acceptance Inspection Report Check List
6030.25	Joint Acceptance Inspection Report Exceptions List and Clearance Record

58.-59. RESERVED.

CHAPTER 6. PROJECT FUNDING

60. PROJECT FUNDING STATUS, GENERAL. Funding has been approved for the procurement and installation of 137 Mode S systems. A requirement for additional systems has not yet been established.

61. PROJECT FUNDING STATUS, REGIONS. Regions have already been provided funds for site preparation at those sites that will receive shelters. Funding in the amount of $12K will be provided for site preparation at each ASR-7 and ASR-8 site, while $10K in funding will be provided for each of the other sites. Additional funding will be provided as required, based on justification.

62.-69. RESERVED.

CHAPTER 7. DEPLOYMENT

70. GENERAL DEPLOYMENT ASPECTS.

a. The Mode S contract includes turnkey installation by the contractor. As such, the contractor is responsible for the design, manufacturing, testing, delivery and installation of the Mode S equipment at the field sites. An initial DRR meeting was conducted on November 16, 1988, in accordance with Order 1800.63, NAS Deployment Readiness Review (DRR) Program. The Mode S DRR checklist is updated and published bimonthly.

b. The Mode S PM plans to comply with the policies and procedures for DRR as specified in FAA Order 1800.63. The PM will coordinate with AAF-11, Deployment Readiness Review Management, to ensure timely compliance with DRR policies and procedures, and the coordination of support in conducting the Mode S DRR.

71. SITE PREPARATION.

a. The contractor will provide the FAA with a Site Preparation Report (SPR) 6 months prior to schedule equipment delivery date and have site ready 60 days prior to equipment delivery. This report will be used by the FAA to prepare the site for installation of the Mode S equipment and to perform necessary services not required of the contractor. The FAA is required to provide the necessary equipment and to perform the necessary services for each site prior to the installation of Mode S. The contractor is required to submit a SPR for each site receiving Mode S equipment.

b. FAA regions will normally select CPME sites, using guidelines provided by the program office. These sites will utilize existing FAA/Government locations or property, such as Radar Microwave Link (RML) towers and control towers, where appropriate.

c. The regions, in coordination with TSSC, are expected to prepare the site in accordance with the SPR.

(1) The TSSC contractor, under a national work release (N-ADS-91-003-R-02), will accomplish the following items:

(a) Perform site surveys to locate CPME sites when suitable existing locations are not available.

(b) Perform site preparation for CPME. Included will be the surveying to establish the azimuth and range of the CPME from the Mode S site.

(c) Provide and install two 5-volt power supplies and all necessary power and signal cables, connectors, conduits, junction boxes, etc, required for the pedestal-mounted azimuth encoders at all sites except ASR-9 sites.

(d) Install Mode S rotary joints at appropriate ASR-7 and ASR-8 sites defined by the radar system redistribution ("leap frog") program. The Mode S rotary joints will be provided by the program office. The region will install Mode S rotary joints at all other ASR-7 and ASR-8 sites.

(e) Install 75-KW standby power EG's at 22 ASR-7 and ASR-8 sites. This effort will include the removal and disposal of existing 50-KW EG's, as directed by the program office. Table 7-1 lists the 22 sites.

(f) Upgrade power distribution systems to 112.5-KW capacity at 19 ASR-7 and ASR-8 sites. Table 7-2 lists the 19 sites.

(g) Upgrade the AC systems at nine ASR-7 and ASR-8 sites by installing new 15-ton AC systems. The system design shall include use of the existing AC units. Table 7-3 lists the nine sites.

(h) Provide all manpower, material, and equipment required to lift or move complete Mode S systems from the ground level to an upper floor level at five FPS Radar Surveillance (FPS) facilities. Table 7-4 lists the five locations.

(i) Install beacon cables between the planned location of the Mode S equipment and the rotary joint. If the horizontal cable runs exterior to the building exceed 10 feet, the cables shall be covered by a solar shield. The vertical runs of the cables up the tower shall be supported approximately every 5 feet. Ends of the cables at the rotary joint location shall be left in a weatherproof condition. Regions are required to phase match these cables.

(j) TOY Clock mounting pads are to be installed a minimum of 12 feet apart and to more than 25 feet from the planned location of their respective antenna pre-amps. The mounts are in such a location that the TOY Clocks can be pointed at their east/west satellites without and obstructed path.

(k) Plywood panels for mounting the Mode S Junction Box and Power Distribution Box and the Communication Junction Boxes are to be installed in such manner that the maximum distance between the DPS cabinets and the Communication Junction Box(es) is 25 feet, and the maximum distance between the MSJB and the Interrogator cabinets is 30 feet.

(l) A 100-amp power source consisting of 4-#2 power conductors and 1-#6 green insulated ground wire is to be installed from 100-amp breaker in an existing Power Distribution Box to a Junction Box above the planned location of the left unconnected from the breaker and sufficient cable length is left in the Junction Box to reach the Mode S Power Distribution Box.

(m) A #1-0 AWG grounding wire is installed from a facility multipoint ground plate to the planned location of the Mode S equipment grounding plate. Grounding wire shall be installed in a 1" PVC conduit.

(n) A structural support is to be provided for supporting the weight of the Mode S Junction Box.

(o) All physical obstructions which would interfere with the Mode S equipment installation along a clear wall are to be removed. The space 9 feet in front of the wall and 7 feet above the finished floor is to be cleared of any obstructions. The length of the cleared space is 27 feet.

(2) At en route Mode S sites, an open array back-to-back antenna assembly and a new rotary joint with six beacon paths will be installed by FAA Logistics Center personnel. This equipment will be installed prior installation of the Mode S equipment. Installation of the antennas will be concurrent with installation of the new radomes.

TABLE 7-1. ASR/MODE S SITES TO RECEIVE 75-KW ENGINE GENERATORS

Existing "Leapfrog" Sites

Great Falls, MT
Evansville, IN
Macon, GA
Springfield, MO
Bangor, ME
Fort Smith, AR
Santa Barbara, CA
Spokane, WA
Wilmington, NC

New "Leapfrog" Sites

Lake Charles, LA
Fresno, CA
Tallahassee, FL
Abilene, TX

Non-"Leapfrog" Sites

Green Bay, WI
Corpus Christi, TX
Bristol, TN
Billings, MT
Bismarck, ND
Midland, TX
Roanoke, VA
Jackson, MS
Fargo, ND

TABLE 7-2. ASR/MODE S SITES TO RECEIVE POWER DISTRIBUTION UPGRADES

Existing "Leapfrog" Sites

Great Falls, MT
Evansville, IN
Macon, GA
Springfield, MO
Bangor, ME
Fort Smith, AR
Santa Barbara, CA
Spokane, WA
Wilmington, NC
Duluth, MN

Non-"Leapfrog" Sites

Green Bay, WI
Corpus Christi, TX
Bristol, TN
Billings, MT
Bismarck, ND
Midland, TX
Roanoke, VA
Jackson, MS
Fargo, ND

Table 7-3. ASR/MODE S SITES TO RECEIVE AIR CONDITIONING UPGRADES

Duluth, MN
Evansville, IN
Macon, GA
Wilmington, NC
Bangor, ME
Springfield, MO
Great Falls, MT
Spokane, WA
Santa Barbara, CA

TABLE 7-4. FPS SITES REQUIRING ABOVE-GROUND-LEVEL MODE S INSTALLATIONS

Klamath Falls/Keno, OR
Saint Albans, VT
Amarillo, TX
Angels Peak, NV
Red Bluff, CA

72. DELIVERY.

a. Hardware. The contractor is responsible for providing all equipment, material, and required personnel at each Mode S site, as appropriate. Equipment and associated materials will be shipped to each site coincident with times detailed in the approved deployment schedules. The contractor's installation team will be responsible for final receipt of shipment made for site installation. The deployment schedule is shown in appendix 2.

b. Software. The version of software deployed with sensors depends upon completion of the full Mode S OT&E and commissioning of the Baltimore/Washington International (BWI) airport sensor. Those sensors fielded before BWI commissioning will use the Interim Beacon Initiative (IBI) release (R1.1FA) and those after use the final R1.1 Mode S software (R1.1CU). The first 20 sites will be IBI with the remaining sites as full Mode S. For the IBI Systems already fielded and subsequent systems, software version R1.2 will be provided. The software R1.2 is being developed at the FAA Technical Center with Mode S contract support and will be tested as part of the Mode S OT&E. Software upgrade R1.2 will be delivered approximately Jan. 93 and installed after final testing is completed.

(1) Software Release 1.1 will support a terminal sensor and will include automatic failure recovery features while satisfying certain of the Mode S requirements. It will generally satisfy Mode S specifications except as follows:

(a) The Mode S sensor with Software Release 1.1 will provide the basic characteristics of a terminal sensor (Type I) only.

(b) The traffic-handling capacity of a Mode S sensor with Software Release 1.1 will meet the ARTS capability.

(c) The Mode S sensor with Software Release 1.1 will not include a PSF) to-sensor link for transmission of data.

(d) Overlapping and adjacent sensor coverage will not be supported by Software Release 1.1.

(e) The Mode S sensor with Software Release 1.1 will have a processor utilization of no more than 70 percent.

(f) The Mode S sensor with Software Release 1.1 will satisfy the reliability and maintainability requirements of the Mode S specification except that the recovery time will be one (1) second.

(2) Software Release 1.2 will meet all requirements of the Mode S specification.

(3) Software Release 1.1 will be provided with the first 20 deliverable Mode S systems.

(4) Software Release 1.2 will be provided with all subsequent deliverable Mode S systems.

(5) When fully baselined, Software Release 1.2 will be provided for the first 20 systems.

73. INSTALLATION PLAN.

a. Installation and checkout of the Mode S equipment is the responsibility of the Mode S contractor, on a turnkey basis. The entire effort will be under the management control of the PM with assistance from Associate Program Managers and other regional and site representatives. The TOR will witness and certify the acceptability of each installation. Procedures for routine progress reporting will be established by the PM with input from the TOR and item managers. ANR-130 will advise the regions on disposition of any equipment displaced by Mode S equipment.

b. The contractor will prepare an installation plan for each site, with schedules for accomplishing each part of the work. Regional site drawings of each facility are to be furnished to the contractor to aid in the preparation of this plan. Coordination with the regions on the installation plan/schedules will be accomplished by the program office. Review by the cognizant regional AT and AF divisions shall be accomplished as expeditiously as possible. The plans will contain all necessary information required by trained technicians and engineers to correctly install the equipment and initiate its

operation. Included will be step-by-step procedures for off-loading, unpacking, and installing the Mode S sensor and its supporting equipment.

In summary, all activities relating to the installation effort will be described in the installation plan.

c. The contractor will schedule, coordinate, and staff the efforts required for expeditious completion of the installation with absolute minimum disruption to ongoing Government operations and its surrounding area. Once started it is expected that installation and site test will be accomplished within 22 days. All activities of the contractor from delivery of the equipment through installation checkout, and acceptance will be coordinated with the onsite TOR.

d. The contractor will conduct a pre-installation site visit inspection 60 days prior to shipment of the equipment to establish that the sites are ready for equipment installation.

74.-79. RESERVED.

CHAPTER 8. VERIFICATION

80. FACTORY VERIFICATION.

a. General. The contractor developed a Mode S System Test Plan that defines the verification phases and how individual procedures will be developed and approved to verify the requirements of the Mode S specification. The contractor portion of the Mode S verification and testing is being conducted in phases; each phase is designed to provide increased assurance that required system objectives are being met. Verification begins with Development Test and Evaluation (DT&E) and shall be complete upon the satisfactory verification of required system performance during in-plant acceptance testing and onsite Field Test and Evaluation (FT&E). The Mode S test program comprises Phase IA, DT&E phase, Phase IB, FT&E phase, Phase II, Production Acceptance Test and Evaluation (PAT&E) phase, and Phase III, onsite testing. In addition, the test program requires reliability growth testing to demonstrate electromagnetic compatibility with the operating environment, maintainability and integration tests. Contractor testing will include software testing of Release R1.1 and R1.2.

b. Design Identification Matrix. The Mode S Master Test Plan also contains the design certification matrix. This matrix provides a functional decomposition of the Mode S specification requirements, which associates each specification paragraph with the method of verification. In the case of verification by test, the particular contractor test procedure that will demonstrate compliance in accordance with the specifications, is also indicated. In the case of verification by analyses or data, the matrix delineates the contract or specification reference that requires or permits the verification to be performed by analysis or data submittal. Verifications by inspection will be performed by in-process inspection. All other references are to specification paragraphs; these are either not quantitative, do not require verification, or are not qualitatively verifiable.

81. CHECKOUT.

A preliminary site test will be conducted prior to formal site testing at one FAA site of installation. The test will constitute a dry run of the formal tests using Government-approved test procedures and will be done following the onsite equipment installation. Data will be collected and certified by the contractor's QA representative and submitted for FAA's review prior to start of the formal onsite test.

82. CONTRACTOR INTEGRATION AND SITE ACCEPTANCE TESTING. Procedures are provided by the contractor and approved by the FAA for onsite integration and acceptance testing. The procedures are designed to test the overall sensor functionality at each of the Mode S sites. The tests make extensive use of such Government-Furnished Equipment (GFE) as the Transportable Radar Analysis Computer System (TRACS). TRACS will serve as the method of demonstrating the equipment for FAA's onsite acceptance of the system. One specific use will be to establish the accuracy of the output data and the correct functioning of the sensor with its associated ATC equipment.

83. CONTRACTOR ACCEPTANCE INSPECTION (CAI). The contractor, through the integration and onsite testing, will have demonstrated to the FAA that the system has met with all technical and functional requirements. The completion of these tests designates acceptance of the equipment by FAA. At this time the TOR should prepare and then sign FAA Form 256, Inspection Report of Material or Services.

84. OPERATIONAL TESTING AND NAS INTEGRATION TESTING. A Mode S OT&E/Integration Test Plan (ITP) has been prepared by FAA Technical Center (The Mode S Operational Test and Evaluation/Integration Test Plan, DOT/FAA/CT-TN89/51). Operational and NAS integration testing will be conducted to verify the NAS system level and operational requirements using live and/or simulated data and/or interfaces. Based upon the availability of these data/interfaces, this could be a one time test. ACN-220 is the office of primary responsibility for operational and NAS integration testing. Mode S operational and NAS integration testing will include, as a minimum, running diagnostics, interface tests with appropriate RMMS equipment, loading of site operational software, and running of test procedures to verify that system-level and operational requirements are met. The OT&E Testing includes hardware and software.

85. SHAKEDOWN AND CHANGEOVER. Shakedown testing is the final stage of OT&E. The goal of shakedown testing is the exercising and T&E of a system in an operational environment to support the determination that the system is ready for full operation as part of the NAS. This includes T&E to confirm that, when the system is operated and maintained by operational personnel in an operational environment, all requirements are met. Shakedown testing should reflect the operational readiness of people, procedures, and the system, to assume field operational status. JAI is a subset of shakedown testing. Results from shakedown

testing and JAI support the DRR decision. The DRR decision is made for the first operational site while shakedown testing would apply to all sites.

86. JOINT ACCEPTANCE INSPECTION (JAI). A JAI will be conducted in accordance with Order 6030.45. The purpose of the JAI is to ensure that each Mode S system meets specified requirements for operation and maintenance and is ready to be commissioned. The Joint Acceptance Board (JAB) may include representatives from ANR, ATR, regional offices, Mode S sites, and other organizations as appropriate. A copy of the results of the JAI will be forwarded to the TO for submission to the PM. The JAI documentation is comprised of FAA Forms 6030.18 through 6030.25 and the data contained therein. Mode S will be designated to be operationally certified upon the satisfactory completion of the JAI.

87. FLIGHT INSPECTION. The flight inspection technique has been traditionally used to establish various operational parameters, including system coverage, of ground-based navigational, radar, and radar beacon systems. The technique utilizes a flight inspection aircraft, suitably equipped with appropriate data-gathering and recording equipment, that flies in various patterns relative to the system(s) being evaluated. Resulting data is analyzed to determine, for instance, the coverage area of a radar beacon system. Over a period of time, the flight inspection system has been supplemented by other techniques and systems that use data generated by digital beacon processors and automation systems in conjunction with computer data-extraction and data-analysis programs. These systems allow comprehensive analyses of radar beacon system performance. One such system, to be provided by the FAA program office, is the TRACS.

a. TRACS. This system has the capability of recording CD-formatted surveillance output test data from up to three Mode S sensors simultaneously. TRACS operates with several computer programs that collectively provide system analysis data. These programs include:

(1) Beacon False Target Analysis (BFTA). This program provides a comprehensive analysis of false targets, including splits, ring-around, and reflections.

(2) Common Digitizer Data Reduction (COMDIG). This program is used for the analysis of digitized radar beacon systems.

(3) Quick Analysis of Radar Sites (QARS). This program is used as a daily performance check of a digitized radar beacon system, such as Mode S.

(4) Radar Scans (RSCANS). This program provides a statistical summary of the search coverage of the Mode S sensor. The output of the program includes graphs and scattergrams that define the three-dimensional coverage of the sensor.

(e) CD Record. This program provides an extensive data base for use with the programs cited in subparagraph numbers used by TRACS.

(f) Quality Precheck. This program ensures that incoming data is from the correct Mode S sensor and that the interfaces are working properly.

b. Verification. TRACS will be used to provide the data needed to determine that Mode S meets operational coverage requirements. Flight check tests will be kept to a minimum, and will be used to verify some of the TRACS data. These tests will be conducted in accordance with Order A8200.1 United States Standard Flight Inspection Manual. If necessary revised requirements and procedures will be established during the OT&E tests performed on the first system at the FAA Technical Center. The program office will provide funds to cover flight check costs.

88.-89. RESERVED.

CHAPTER 9. INTEGRATED LOGISTICS SUPPORT

90. MAINTENANCE CONCEPT. The design and operational characteristics of the NAS Maintenance Concept are described in Order 6000.30B. Mode S will be supported in compliance with the maintenance policy at two levels of maintenance-site and depot. All elements of maintenance will be in accordance with the ILS concept. The general approach to maintenance is to monitor Mode S sensors remotely at a central location. When a failure occurs, alarms will alert maintenance personnel who can diagnose the problem to the Line Replaceable Unit (LRU) level by using remotely-initiated and remotely-monitored system diagnostics. Upon isolation of the problem to the faulty LRU, maintenance personnel will be dispatched to the sensor site to replace the faulty unit(s) and initiate system verification. Complete system checkout and normal preventive maintenance tasks will be accomplished prior to leaving the sensor site. The failed unit(s) will be forwarded to the FAA Logistics Center for repair, where specialized skills and equipment will be used. For more specific detail about ILS, users should refer to the Integrated Logistics Support (ILS) Plan for Mode S.

91. TRAINING. PSF and Mode S on-the-job training (OJT) classes for FAA Technical Center personnel were conducted by the contractor in October and November 1991. In addition, seven Mode S overview classes for regional and program office management personnel were conducted by the contractor during the August to December 1991 timeframe. Sixty technicians have been trained by the end of May 1992 as a result of the five contracts Mode S hardware maintenance classes currently being conducted. The remaining 397 technicians (based upon five technicians at continuously-manned Mode S sites and three technicians at sites not continuously manned) will receive their training at the FAA Academy. Classes at the FAA Academy will be initiated January 6, 1993. Specifically upon the completion of training the technician should be able to perform preventive and corrective maintenance on the Mode S System in accordance with the procedures and to the standards specified in the Mode S Instruction Manuals. A 9 week Mode S software maintenance course for FAA Technical Center personnel will be conducted by the contractor. No formal training is being provided for air traffic personnel. Arrangements are being made to provide on-the-job remote terminal training for the air traffic personnel. For more specific details on training refer to the Mode S ILSP.

92. SUPPORT TOOLS AND TEST EQUIPMENT.

a. General. Special tools, test equipment, and other support equipment required to support Mode S will be held to a minimum. When special tools are required for maintenance, they will be provided by the contractor. Requirements for special tools and their use will be detailed in the Equipment Instruction Book (EIB) maintenance procedures. Mode S test equipment will include equipment presently used onsite for Air Traffic Control Beacon Interrogator (ATCBI) maintenance, and new equipment to be provided by the Mode S Program Office.

b. New Test Equipment. Seventy-six (76) sets of test equipment will be procured and delivered in support of onsite maintenance of the Mode S sensors. A "set" of onsite test equipment will be comprised of the following items:

Network Analyzer (with Time Domain Option) - HP8375C or equivalent
S-Parameter Test Set - HP85046A or equivalent
Calibration Kit - HP85032B or equivalent
RF Extension Cables Kit - HP11857D or equivalent
RF Peak Power Meter - HP8990A or equivalent
Peak Power Sensor - HP84812A or equivalent
Transit Cases for:
- Network Analyzer - HP9211-2656
- S-Parameter Test Set - HP9211-2660
- RF Peak Power Meter - HP9211-2645

A complete set of the above test equipment will be provided to each Mode S site (29) where a complete set of spares are provided. The remaining test equipment (47) will be provided to the regions to be located as they best determine to support the other Mode S site.

c. Initial Supply Support Allowances Chart (ISSAC). The ISSAC will developed by AAC-485 after arrangement of National Stock Numbers (NSN)'s are completed and the Parts Provisioning List (PPL) is accomplished.

93. SUPPLY SUPPORT. A Mode S sparing plan was developed and recommended by a Mode S Spares Working Group consisting of regional representatives. The plan was approved by AAF-1 on June 29, 1990. A complete set of spares will be provided at 28 continuous maintenance airport sites and nine difficult-access sites. A partial set of spares, consisting of 13 LRU's of 12

types, will be provided at the 96 remaining sites. These 12 LRU types account for approximately 75 percent of total logistics failures generated by Mode S. LRU's not spared at the site will be ordered directly from the FAA Logistics Center. Storage cabinets will be provided to all Mode S sites for spare storage. For more specific detail about supply support users, refer to ILSP for Mode S, section 4.

94. VENDOR DATA AND TECHNICAL MANUALS. The contractor will provide EIB's, software manuals, training course materials, vendor manuals, provisioning documentation, and any other documents and plans required by the contract. Provisioning documentation will include spare parts peculiar lists, numerical parts lists, tool lists, re-procurement data, drawings, etc. ASM-400 will provide a maintenance handbook to each Mode S site.

95. EQUIPMENT REMOVAL. The FAA is responsible for the removal of ATCBI equipment after commissioning of Mode S. The ATCBI-3 equipment will be disposed of in accordance with Order 4800.2B. The ATCBI-4 and ATCBI-5 equipment will be "leap-frogged" to new ASR-7/8 radar sites and will replace ATCBI-3 equipment at other radar sites. "Leap-frog" shipping instructions will be provided by the PM for En Route Radar, ANR-400. A PIP is being prepared for the ATCBI-4/5 leap-frog program.

96. FACILITIES. The FAA is responsible for providing space for the Mode S equipment and other site preparation needs.

97.-99. RESERVED.

APPENDIX 1. ABBREVIATIONS & ACRONYMS

ORGANIZATION SYMBOLS.

AAC	Mike Monroney Aeronautical Center
AAP	Program Manager for Advanced Automation
AAT	Associate Administrator for Air Traffic
ABU	Office of Budget
ACN	Engineering, Test, and Evaluation Service (ACT)
ACS	Assistant Administrator for Civil Aviation Security
ACT	Office of the Center Director, FAA Technical Center
AFS	Flight Standards Service
AGC	Office of the Chief Counsel
AHT	Office of Training and Higher Education
ASU	Office of Acquisition Support
ANA	Program Director for Automation
ANR	Program Director for Surveillance
ANS	NAS Transition and Implementation Service
ASE	NAS System Engineering Service
ASM	Systems Maintenance Service
ACT	FAA Technical Center
ATM	Office of Air Traffic System Management
ATP	Air Traffic Rules and Procedures Service
ATR	Air Traffic Plans and Requirements Service
FAA	Federal Aviation Administration

ASSOCIATE PROGRAM MANAGERS:

APMA	Associate Program Manager for the FAA Academy
APMAL	Associate Program Manager for the Alaskan Region
APMC	Associate Program Manager for Contracting
APMCE	Associate Program Manager for the Central Region
APMD	Associate Program Manager for the FAA Logistics Center
APME	Associate Program Manager for Engineering
APMEA	Associate Program Manager for the Eastern Region
APMG	Associate Program Manager for General Counsel
APMGL	Associate Program Manager for the Great Lakes Region
APML	Associate Program Manager for Logistics
APMNE	Associate Program Manager for the New England Region
APMNM	Associate Program Manager for the Northwest Mountain Region
APMP	Associate Program Manager for ATC Procedures
APMQ	Associate Program Manager for Quality
APMR	Associate Program Manager for ATC Requirements
APMSE	Associate Program Manager for Systems Engineering
APMSM	Associate Program Manager for Systems Maintenance
APMSO	Associate Program Manager for the Southern Region
APMSW	Associate Program Manager for the Southwest Region
APMT	Associate Program Manager for Testing
APMWP	Associate Program Manager for the Western-Pacific Region

ACRONYMS:

AC	Air Conditioning
ACO	Administrative Contracting Officer
AERA	Advanced En Route Automation
AF	Airway Facilities
AFSO	Airway Facilities Sector Office
AFSFO	Airway Facilities Sector Field Office
ASR	Airport Surveillance Radar
ARSR	Air Route Surveillance Radar
ARTCC	Air Route Traffic Control Center
AT	Air Traffic
ATC	Air Traffic Control
ATCBI	Air Traffic Control Beacon Interrogator
ATCRBS	Air Traffic Control Radar Beacon System
ATN	Aeronautical Telecommunications Network
ATO	Alternate Technical Officer
BFTA	Beacon False Target Analysis
bps	Bits per Second
BOS	Beacon-Only Site
CAE	Call for Estimates
CAI	Contractor Acceptance Inspection
CCB	Configuration Control Board
CCD	Configuration Control Decisions
CD	Common Digitizer

CDR	Critical Design Review
CIP	Capital Investment Plan
COMDIG	Common Digitizer Data Reduction
CPME	Calibration Performance Monitoring Equipment
CPCI	Computer Program Configured Item
DLP	Data Link Processor
DOC	Date of Contract
DPS	Data Processing System
DRR	Deployment Readiness Review
DT&E	Development Test and Evaluation
EG	Engine Generator
EIB	Equipment Instruction Book
FAA	Federal Aviation Administration
FAALC	Federal Aviation Logistics Center
FAR	Federal Acquisition Regulations
F&E	Facilities and Equipment
FT&E	Field Test and Evaluation
FRB	Facilities Review Board
FRDF	Facility Reference Data File
GFE	Government-Furnished Equipment
ICD	Interface Control Document
ILS	Integrated Logistics Support
ILSMT	Integrated Logistics-Support Management Team
ILSP	Integrated Logistics Support Plan

ISP	Integrated Support Plan
ITP	Integration Test Plan
JAB	Joint Acceptance Board
JAI	Joint Acceptance Inspection
JV	Joint Venture
KW	Kilo Watt
LOA	Letter of Agreement
LRU	Line Replaceable Unit
Mode S	Mode Select (Mode Select Beacon Sensor)
MPS	Maintenance Processor Subsystem
MSA	Major System Acquisition
MTBF	Mean Time Between Failure
NAILS	National Airspace Integrated Logistics Support
NAILSMT	National Airspace Integrated Logistics Support Management Team
NAS	National Airspace System
NICS	National Interfacility Communications Service
OJT	On-The-Job Training
OPS	Operations
OT&E	Operational Test and Evaluation
PAT&E	Production Acceptance Test and Evaluation
PDR	Preliminary Design Review
PIP	Project Implementation Plan
PM	Program Manager
PSF	Program Support Facility

PSRB	Project Status Review Board
QA	Quality Assurance
QARS	Quick Analysis on Radar Sites
QRO	Quality and Reliability Officer
R&D	Research and Development
RF	RadioFrequency
RM	Remote Monitoring
RMA	Reliability, Maintainability, and Availability
RML	Radar Microwave Link
RMMS	Remote Maintenance Monitoring System
RMS	Remote Maintenance Subsystem
RPMS	Regional Project Management System
RSCANS	Radar Scans
SARC	System Acquisition Review Committee
SEB	Source Evaluation Board
SEI	System Engineering and Integration
SER	Site Engineering Report
SOW	Statement of Work
SPR	Site Preparation Report
TBD	To Be Determined
T&E	Test and Evaluation
TD	Test Director
TO	Technical Officer
TOY	Time of Year

TOR	Technical Onsite Representative
TRACAB	Terminal Radar Approach Control in Tower Cab
TRACON	Terminal Radar Approach Control
TRACS	Transportable Radar Analysis Computer System
TSARC	Transportation Systems Acquisition Review Council
TSC	Transportation Systems Center
TSSC	Technical Support Services Contract
WEC	Westinghouse Electric Corporation

APPENDIX 2. MODE S DEPLOYMENT SCHEDULE

DELV. SEQ. No.	SITE ID	SITE NAME	STATE	PRIM RADAR	REGION	Mode S DELIVERY DATE
1	ACYT	ACT	NJ	9	ACYT	07/15/89
2	ACYT	ACT	NJ	9	ACYT	03/30/92
3	MCO	ORLANDA	FL	9	ASO	04/15/92
4	OEX	AERONAUTICAL CTR	OK	9	DEX	07/30/92
5	DEP	LOGISTICS CTR	OK	9	DEP	09/10/92
6	DVX	DENVER	CO	9	ANM	10/30/92
7	BAL	BALTIMORE	MD	9	AEA	11/30/92
8	DVX	DENVER 2 (PLTSVL)	CO	9	ANM	11/30/92
9	AUS	AUSTIN/BRGSTRM	TX	9	ASW	12/30/92
10	MCI	KANSAS CITY	MO	9	ACE	12/30/92
11	CLT	CHARLOTTE	NC	9	ASO	12/30/92
12	DFW	DALLAS-FT.WORTH	TX	9	ASW	01/30/93
13	STL	SAINT LOUIS	MO	9	ACE	01/30/93
14	LGB	LONG BEACH	CA	9	AWP	01/30/93
15	CLE	CLEVELAND	OH	9	AGL	01/30/93
16	HAR	HARRISBURG	PA	9	AEA	02/28/93
17	NKX	SAN DIEGO/MIR	CA	9	AWP	02/28/93
18	CVG	COVINGTON/CINCIN	KY	9	ASO	02/28/93
19	SLC	SALT LAKE CITY-9	UT	9	ANM	02/28/93
20	BUF	BUFFALO	NY	9	AEA	03/30/93
21	ICT	WICHITA	KS	9	ACE	03/30/93
22	BHM	BIRMINGHAM	AL	9	ASO	03/30/93
23	BAB	MARYSVILLE/BEALE	CA	9	AWP	03/30/93
24	SYR	SYRACUSE	NY	9	AEA	04/30/93
25	OAK	OAKLAND	CA	9	AWP	04/30/93
26	BNA	NASHVILLE	TN	9	ASO	04/30/93
27	BOL	WINDSOR LOCKS	CT	9	ANE	04/30/93
28	ADW	CAMP SPRINGS/ANDR	MD	9	AEA	05/30/93
29	DTW	DETROIT	MI	9	AGL	05/30/93
30	MEM	MEMPHIS	TN	9	ASO	05/30/93
31	SEA	SEATTLE	WA	9	ANM	05/30/93
32	ACY	ACT	NJ	2	ACYT	06/30/93
33	PDX	PORTLAND	OR	9	ANM	06/30/93
34	ORD	CHICAGO	IL	9	AGL	06/30/93
35	JAX	JACKSONVILLE	FL	9	ASO	06/30/93
36	NUQ	MOFFETT/SAN JOSE	CA	9	AWP	06/30/93
37	PVD	PROVIDENCE(COVEN)	RI	9	ANE	07/30/93
38	QXM	CHICAGO SOUTH (TP)	IL	9	AGL	07/30/94
39	MIA	MIAMI	FL	9	ASO	07/30/93
40	OFF	OMAHA	NE	9	ACE	07/30/93
41	IAD	WASHINGTON	DC	9	AEA	08/30/93
42	MSP	MINNEAPOLIS	MN	9	AGL	08/30/93

DELV. SEQ. No.	SITE ID	SITE NAME	STATE	PRIM RADAR	REGION	Mode S DELIVERY DATE
43	CHS	CHARLESTON	SC	9	ASO	08/30/93
44	MCC	SACRAMENTO/MCLLND	CA	9	AWP	08/30/93
45	BGR	BANGOR	ME	8L	ANE	09/30/93
46	IND	INDIANAPOLIS	IN	9	AGL	09/30/93
47	SDF	LOUISVILLE	KY	9	ASO	09/30/93
48	BUR	BURBANK	CA	9	AWP	09/30/93
49	ORF	NORFOLK	VA	9	AEA	10/30/93
50	DAY	DAYTON	OH	9	AGL	10/30/93
51	SAT	SAN ANTONIO	TX	9	ASW	10/30/93
52	LAS	LAS VEGAS	NV	9	AWP	10/30/93
53	PIT	PITTSBURGH	PA	9	AEA	11/30/93
54	GRR	GRAND RAPIDS	MI	9	AGL	11/30/93
55	HOU	HOUSTON/HOBBY	TX	9	ASW	11/30/93
56	PHX	PHOENIX	AZ	9	AWP	11/30/93
57	PHL	PHILADELPHIA	PA	9	AEA	12/30/93
58	CMH	COLUMBUS	OH	9	AGL	12/30/93
59	IAH	HOUSTON	TX	9	ASW	12/30/93
60	TUS	TUCSON/DAVIS MON	AZ	9	AWP	12/30/93
61	JFK	NEW YORK	NY	9	AEA	01/30/94
62	MSY	NEW ORLEANS	LA	9	ASW	01/30/94
63	LAX	LOS ANGELES-1	CA	9	AWP	01/30/93
64	ROA	ROANOKE	VA	8	AEA	02/28/94
65	MKE	MILWAUKEE	WI	9	AGL	02/28/94
66	FLL	FORT LAUDERDALE	FL	9	ASO	02/28/94
67	LAXA	LOS ANGELES-2	CA	9	AWP	02/28/94
68	ROC	ROCHESTER	NY	9	AEA	03/30/94
69	PA2	DALLAS (AZLE)	TX	9	ASW	03/30/94
70	SRQ	SARASOTA/BRANTEN.	FL	9	ASO	03/30/94
71	ONT	ONTARIO	CA	9	AWP	03/30/94
72	RDU	RALEIGH/DURHAM	NC	9	ASO	04/30/94
73	OKC	OKLAHOMA CITY	OK	9	ASW	04/30/94
74	TPA	TAMPA	FL	9	ASO	04/30/94
75	NZJ	EL TORO (CP PEND)	CA	9	AWP	04/30/94
76	EWR	NEWARK	NJ	9	AEA	05/30/94
77	TUL	TULSA	OK	9	ASW	05/30/94
78	TLH	TALLAHASSEE	FL	8L	ASO	05/30/94
79	FLX	FALLON	NV	FPS	AWP	05/30/94
80	ALB	ALBANY	NY	9	AEA	06/30/94
81	ABQ	ALBUQUERQUE	NM	9	ASW	06/30/94
82	PNS	PENSACOLA	FL	8	ASO	06/30/94
83	BAM	BATTLE MOUNTAIN	NV	2	AWP	06/30/94
84	BOS	BOSTON	MA	9	ANE	07/30/94

DELV. SEQ. No.	SITE ID	SITE NAME	STATE	PRIM RADAR	REGION	Mode S DELIVERY DATE
85	QPK	PARKER	CO	1	ANM	07/30/94
86	ATL	ATLANTA	GA	9	ASO	07/30/94
87	SLCA	SALT LAKE CY/FRAN	UT	1	ANM	07/30/94
88	ISP	ISLIP	NY	9	AEA	08/30/94
89	TAD	TRINIDAD	CO	2	ANM	08/30/94
90	WRB	WARNER ROBBINS/MC	GA	8L	ASO	08/30/94
91	RKS	ROCK SPRINGS	WY	2	ANM	08/30/94
92	LFI	HAMPTON/LGYL AFB	VA	7	AEA	09/30/94
93	DSM	DES MOINES	IA	9	ACE	09/30/94
94	MGE	MARRIETTA/DOBBINS	GA	GPN	ASO	09/30/94
95	GJT	GRAND JUNCTION	CO	2	ANM	09/30/94
96	HPN	WHITE PLAINS	NY	9	AEA	10/30/94
97	GTF	GREAT FALLS	NT	8L	ANM	10/30/94
98	BAD	BOSSIER CY/SHRVPT	LA	9	ASW	10/30/94
99	QAS	ANGEL PEAK	NV	FPS	AWP	10/30/94
100	BIL	BILLINGS	MT	7	ANM	11/30/94
101	CID	CEDAR RAPIDS	IA	9	ACE	11/30/94
102	FSM	FORT SMITH	AR	8L	ASW	11/30/94
103	TPH	TONOPAH	NV	BOS	AWP	11/30/94
104	TRI	BRISTOL/JHNSON/KG	TN	8	ASO	12/30/94
105	SGF	SPRINGFIELD	MO	8L	ACE	12/30/94
106	LIT	LITTLE ROCK	AR	8L	ASW	12/30/94
107	GEG	SPOKANE	WA	8L	ANM	12/30/94
108	GCK	GARDEN CITY	KS	2	ACE	01/30/95
109	ELP	EL PASO/BIGGS	TX	9B	ASW	01/30/95
110	ILM	WILMINGTON	NC	8L	ASO	01/30/95
111	JAN	JACKSON	MS	8	ASO	02/28/95
112	QJM	ROCKVILLE	NE	BOS	ACE	02/28/95
113	LCH	LAKE CHARLES	LA	8L	ASW	02/28/95
114	RBL	RED BLUFF	CA	FPS	AWP	02/28/95
115	LBF	NORTH PLATTE	NE	2	ACE	03/30/95
116	QJC	TYLER	MN	2	AGL	03/30/95
117	CRP	CORPUS CHRISTI	TX	8	ASW	03/30/95
118	FAT	FRESNO	CA	8L	AWP	03/30/95
119	EVV	EVANSVILLE	IN	8L	AGL	04/30/95
120	DLH	DULUTH	MN	8L	AGL	04/30/95
121	ABI	ABILENE/DYESS	TX	8L	ASW	04/30/95
122	LMT	KLAMATH FALLS/KNO	OR	FPS	ANM	04/30/95
123	GRB	GREEN BAY	WI	7	AGL	05/30/95
124	FAR	FARGO	ND	7	AGL	05/30/95
125	NAF	MIDLAND	TX	7	ASW	05/30/95
126	CDC	CEDAR CITY	UT	2	ANM	05/30/95
127	QHB	SAINT ALBANS	VT	FPS	ANE	06/30/95

DELV. SEQ. No.	SITE ID	SITE NAME	STATE	PRIM RADAR	REGION	Mode S DELIVERY DATE
128	BIS	BISMARCK	MD	8	AGL	06/30/95
129	AMA	AMARILLO	TX	FPS	ASW	06/30/95
130	LSK	LUSK	WY	2	ANM	06/30/95
131	SBA	SANTA BARBARA	CA	8L	AWP	07/30/95
132	QUJB	GETTYSBURG	SD	FPS	AGL	07/30/95
133	QWC	NESA RICA	NM	1	ASW	07/30/95
134	QSI	LOVELL	WY	2	ANM	07/30/95
135	QCJ	CASCADE	ID	2	ANM	08/30/95
136	GUP	GALLUP	NM	2	ASW	08/30/95
137	QVA	ASHTON	ID	2	ANM	08/30/95
138	DCA	WASHINGTON	DC	9	AEA	08/30/95

APPENDIX 3. MODE S OUTSIDE TECHNICAL SUPPORT

Outside organizations currently involved in Mode S technical support are:

1. LINCOLN LABORATORY. Services being provided under an interagency agreement with the U.S. Air Force include support for the Mode S contract and for development of international standards and specifications for Mode S and other technical support as required.

2. SYSTEM ENGINEERING AND INTEGRATION (SEI) CONTRACTOR. Martin Marietta, the SEI contractor, monitors the Mode S program and provides technical, implementation, integration, and planning support to Mode S program management. The company also monitors and analyzes each of the other contractor's technical, scheduling, and financial performance. The SEI contractor will also monitor the progress of Mode S integration into the NAS, and will identify issues and assist program management in resolving integration issues. The SEI contractor also provides technical direction in the out years (started July 17, 1987).

3. JOINT-VENTURE CONTRACTOR. Westinghouse Electric Corporation and Paramax are jointly responsible for the development, manufacture, installation, and testing of the Mode S ground-based systems.

4. JIL SYSTEMS, INC. JIL provides implementation planning and technical support to the program office.

5. RAYTHEON SERVICE COMPANY. Raytheon, under the TSSC, performs the following services at Mode S sites: (1) site surveys and preparation to support the installation of CPME equipment, (2) encoder power supply installation, (3) electrical power system and AC upgrades, (4) rotary joint installation, and (5) other installation support as specified in the national work release.

6. DIMENSIONS INTERNATIONAL, INC. Provides hardware, software, documentation, testing, and field support to ASM-400.

7. RMS TECHNOLOGIES, INC.. Provides hardware, software, documentation, testing, and field support to ASM-400.

8. COMPUTER RESOURCES MANAGEMENT, INC. (CRM). Provides system shakedown support to ASM-400.