ORDER

U.S. DEPARTMENT OF TRANSPORTATION
FEDERAL AVIATION ADMINISTRATION

6560.30

12/21/95

SUBJ: Prototyping the *Airway Facilities Concept of Operations for the Future* with the Automated Weather Observing System (AWOS).

1. PURPOSE.

a. This order establishes two central facilities for monitoring, remote maintenance, and reporting, of all Federal Aviation Administration (FAA) owned AWOS stations. One facility will be located at the Salt Lake City, Utah, National Network Control Center (NNCC) and one facility in Anchorage, Alaska. The Salt Lake City facility will monitor all AWOS stations in the continental United States while the Anchorage facility will monitor all AWOS stations in the Alaskan region.

b. Additionally, this order provides guidance and direction to the Central Monitoring Facility (CMF), regional Maintenance Control Centers (MCC), National Maintenance Control Center (NMCC), and the site technicians for central remote maintenance monitoring (RMM). This order serves as the vehicle for prototyping AWOS operations to validate the *"Airway Facilities Concept of Operations for the Future."*

2. DISTRIBUTION. This order is distributed to the division level within Requirements and Life-Cycle Management, Operational Support, and NAS Operations in Washington; to the division level in the regional Airway Facilities divisions, the FAA Technical Center and the Aeronautical Center; and to all Airway Facilities field offices with a standard distribution.

3. ACTION. Airway Facilities (AF) technicians, specialists, and MCC shall use this order for the day-to-day operations of the AWOS. The procedures as stated herewithin shall be used along with present policies and procedures. If a conflict exists between this document and existing AF orders, notices, or procedures this document shall prevail and the Operation Concepts, Planning, and Performance Division, AOP-200, shall be notified of the discrepancy.

4. BACKGROUND.

a. The AWOS site maintenance was taken over by the FAA from the contractor on April 1, 1994 and the AWOS remote maintenance monitoring (RMM) on July 1, 1994. During the months of April, May, and June, NAS Operations (AOP) looked at ways to transition the RMM element into the FAA while at the same time meet the strategies of the *AF Strategic Plan* and *AF Concept of Operations for the Future*. AWOS was selected to be the first system to implement the AF strategies and prototype the *AF Concept of Operations for the Future*. The AWOS is the first program to prototype central monitoring, remote maintenance, and outage reporting on a national basis.

b. The approach used was to solicit the regions to submit a proposal of their capabilities of taking over the proposed duties. The proposal would include items such as location, capability to take on task, willingness to take on task, initiative, 24-hour operation, and no additional staffing.

c. Since the takeover on July 1, 1994, AOP has issued several memoranda on procedures, operations, maintenance, and reporting of AWOS outages and problems. Due to the many interpretations of the memoranda, a meeting with all the regions was held in Salt Lake City at the end of August to discuss and clarify AWOS operations. The decisions from the meeting have been incorporated in this order.

5. RESPONSIBILITIES. AOP will:

a. Train personnel at the selected CMF on AWOS remote monitoring software.

b. Provide hardware and software to the selected CMF.

c. Provide procedures on how the CMF will operate. Procedures would include:

(1) How to monitor.

(2) What to monitor.

(3) How to report outages.

(4) Responsibilities.

d. Provide access for the CMF personnel to report outages on the remote Maintenance Processor Subsystem (MPS).

e. Inform regions and field of plan.

f. Develop/implement measuring criteria on performance of prototype.

g. Develop/implement feedback mechanism on improving performance.

h. Research on which AF orders present problems and take action to waive, change, or cancel as appropriate.

6. CONCEPT. The AF concept is to migrate to central management of operations for all new FAA systems. The migration will be done in small steps to minimize operational impact.

7. DESCRIPTION.

a. System. The AWOS provides around-the-clock, up-to-date broadcasts on weather and airport conditions. By tuning to the proper frequency, pilots receive voice briefings generated and broadcast over a very-high-frequency (VHF) transmitter, VHF omni-directional range (VOR), or a non directional beacon (NDB). The briefing is updated every 30 seconds and includes: the name of the airport, Coordinated Universal Time (UTC), altimeter setting, density altitude (if it differs from the airport elevation by more than 1000 feet), wind direction (both normal and variable), wind velocity (both normal and peak gusts), surface and dew point temperatures, up to three levels of cloud heights, Notices to Airmen (NOTAM) input by an operator, visibility, and other airport information. This audio information is also available through a telephone dial-up method. The system continuously monitors itself to maintain reliability and accuracy. If a sensor malfunctions or system interruption occurs, the affected parameters will be broadcast as "missing." The system may discontinue reporting under severe interruptions.

b. System Components. The AWOS equipment consists of five functional groups: an airfield (meteorological) sensor group, a data collection platform (DCP), a central data platform (CDP), a data link, and a data distribution group. The airfield sensors and the data collection platform are collocated and typically located near an airport runway threshold. The central data platform can be collocated with the sensors or can be remote. The data link is a digital/analog communication link between the DCP and CDP. It can be either direct wire or ultra-high-frequency (UHF) transceivers. The data distribution group consists of optional equipment including a ground-to-air radio, several types of telephone interfaces, an operator terminal (OT), microphone, and printer. The radio and telephone interfaces are located with the CDP. The operator's terminal, microphone, and printer may be remoted a short distance from the CDP. A complete description of the AWOS system can be found in the latest edition of Order 6560.13,

Maintenance of Aviation Meteorological Systems and Miscellaneous Aids, or the AWOS maintenance manual models 223 and 233. See figure 1 for a block diagram of the AWOS.

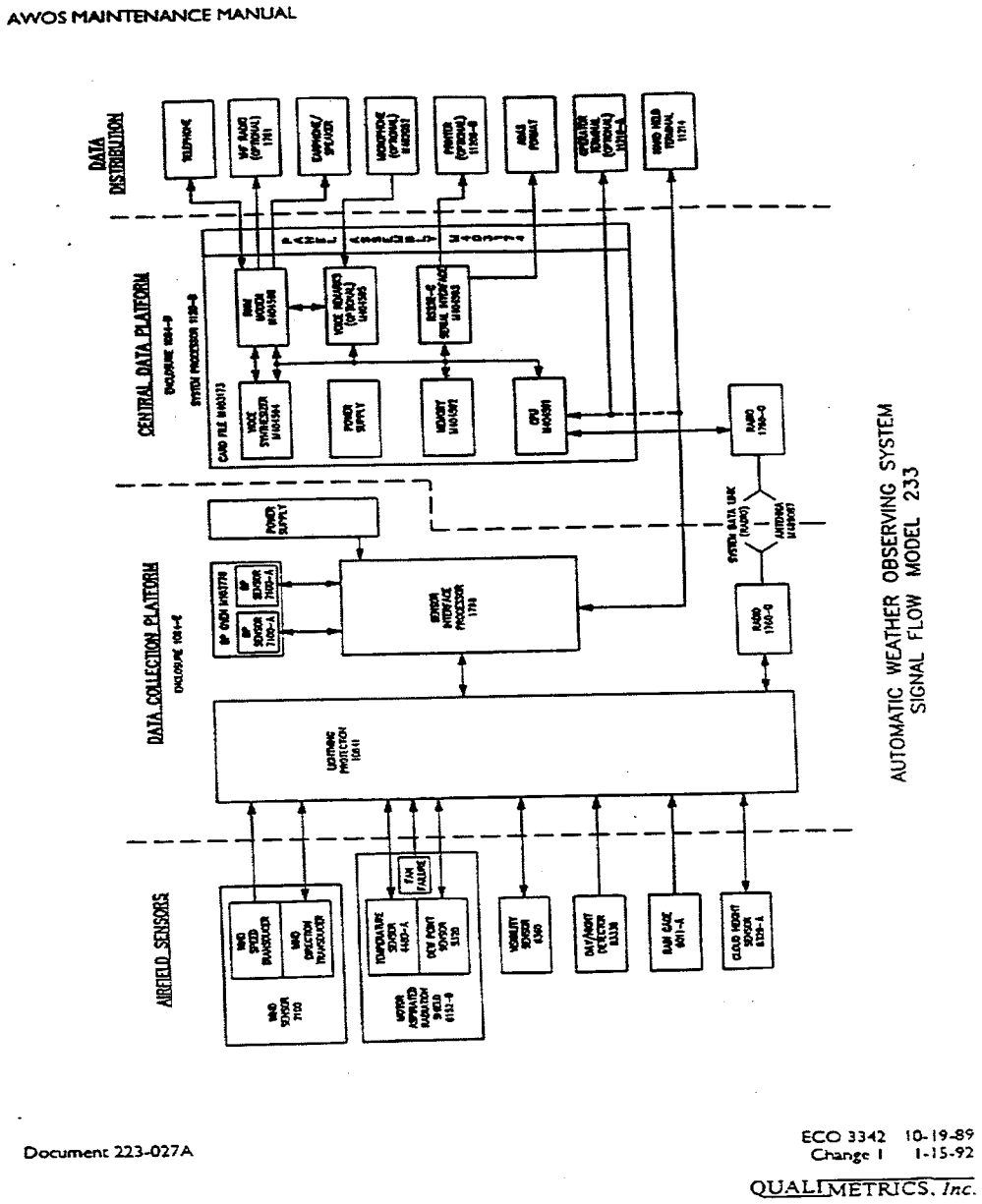

AUTOMATED WEATHER OBSERVING SYSTEM

Figure 1

c. Passive RMM. The RMM system is a hierarchical, menu driven software application that runs on a personal computer. It provides a link between a maintenance personnel and the remote AWOS stations. The passive version of the RMM system gives the user the ability to remotely monitor the AWOS stations. It does **not** allow a remote user to make changes to any AWOS parameters. The software features include manual and auto dialing, manual and auto data retrieval, report view and print capability, and hard disk maintenance.

d. Interactive RMM. The interactive version of the RMM system incorporates the passive version of the application with eight additional features. These additional features allow a remote user to make changes to many AWOS parameters. Also, the AWOS station clock will automatically be reset to UTC time when using the interactive RMM auto dialing feature. An additional software application that comes with the interactive RMM version gives the user the capability to automatically scan the data retrieved from each AWOS station and produce a report of the findings from the scanning process.

8. PROCEDURES. See figure 2 on page 5 for a flow diagram of the procedures.

a. Monitoring

(1) CMF

(a) The CMF will monitor the status of the AWOS stations. Monitoring will be accomplished once each 24-hour period using the interactive RMM software. The CMF will use the automatic dial-up feature of the interactive RMM to monitor and download information from each AWOS site.

(b) Upon completion of the auto dial-up and download, the CMF will analyze the ***AUTOmmdd.MSG*** file (where mm=month, dd=day) and verify which sites successfully connected and which reports were successfully downloaded. If the analysis of the ***AUTOmmdd.MSG*** file reveals that dial-up connections and/or downloads failed, then the CMF personnel will manually dial-up each of the failed sites and download both the ***RMM report*** and the ***Archive data*** file. If additional dial-up attempts fail the CMF will isolate the problem to either local or remote equipment. If the problem is at the remote equipment then the CMF will report the problem to the appropriate MCC following the reporting procedures below.

(c) When step (b) is completed the CMF will execute the ***SCAN_RMM.EXE*** program and analyze its results which are entered into the ***RMMnnn.RPT*** file. (where nnn = Julian date)

(d) Using the analyzed results, the CMF will identify AWOS stations that have failed operations and, if possible, identify the cause of the failure.

b. Maintenance

(1) CMF

(a) Remote maintenance actions will be accomplished as needed by the CMF using the interactive RMM software. The CMF will use the eight remote maintenance features, identified in the following paragraph, of the interactive RMM for all remote maintenance actions.

(b) When the CMF identifies or is made aware of a problem, the CMF shall manually dial the site with the problem and initiate corrective action. The CMF may use the following functions without the prior coordination with the associated MCC and/or technician:

F1 - Set AWOS Station Time
F3 - Lock Archive Data
F4 - Display AWOS System Constants (not used)
F5 - Display AWOS Memory Contents
F7 - Reset AWOS station

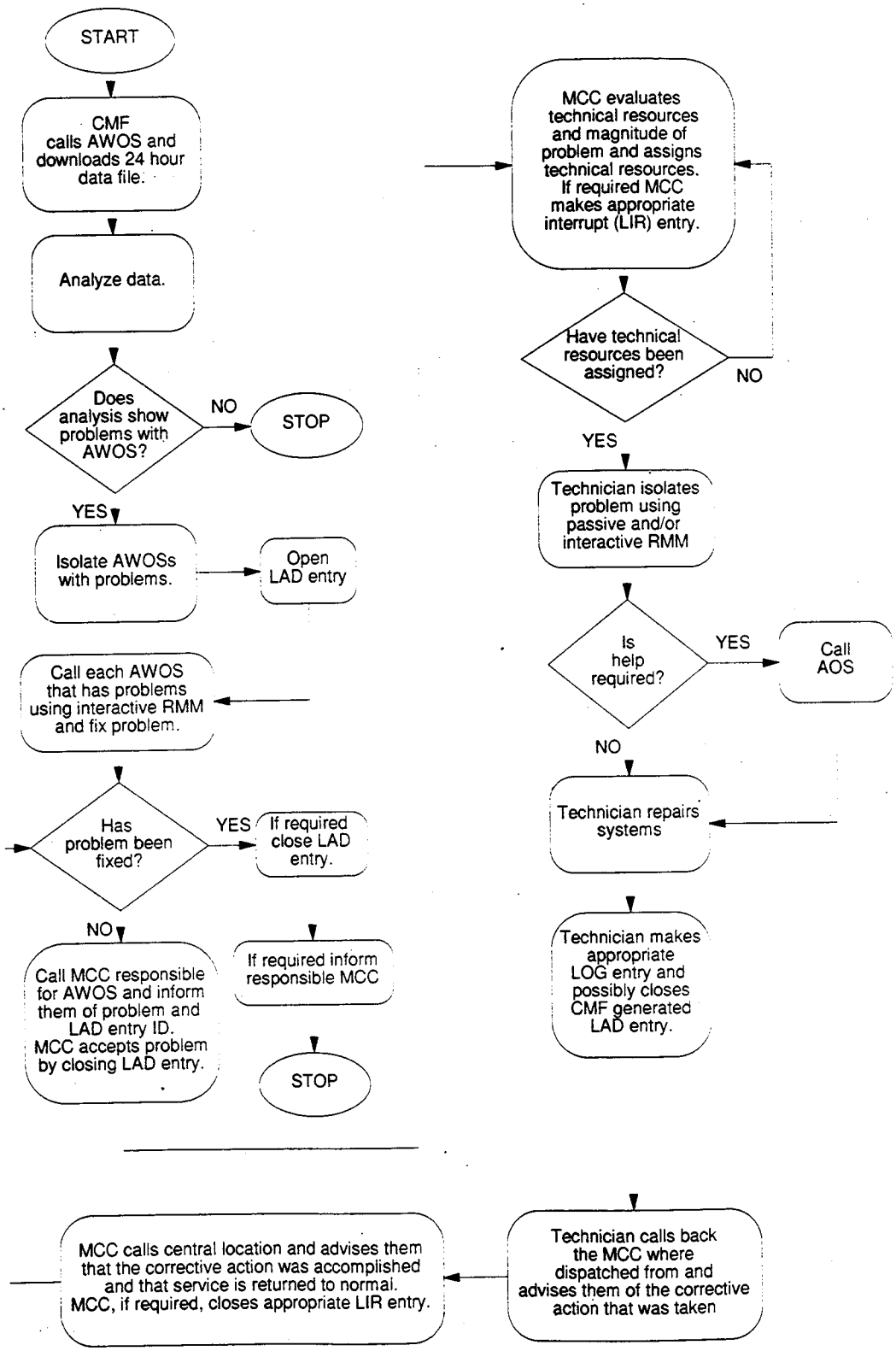

PROCEDURES FLOW DIAGRAM

Figure 2

(c) The CMF may use the following maintenance functions only with prior coordination with the appropriate MCC and/or site technician.

F2 - Clear RMM status
F6 - Set AWOS Memory Contents
F8 - Modify AWOS Internal Status

(2) Site

(a) The site technician is responsible for on-site maintenance of the AWOS. The site technician will follow established procedures for the maintenance of the AWOS other than those addressed in this document.

(b) The site technician is responsible for notifying the CMF through the MCC for any scheduled or unscheduled maintenance. This will preclude the CMF from unnecessary troubleshooting of known alarm conditions. Additionally, the site technician is responsible for identifying to the CMF through the MCC any changes to any AWOS parameters that will affect the remote monitoring capability, including any changes to the barometric pressure parameters.

(c) The telephone number for the central monitoring facility located at Salt Lake City is:

Commercial/FTS	801-320-2184
Toll free	800-322-0433

(d) The telephone number for the central monitoring facility located at Anchorage is:

Commercial/FTS	907-271-2140
Instate toll free	800-478-2139

c. Reporting

(1) CMF

(a) The CMF shall use the maintenance management system (MMS) to report AWOS malfunctions identified during the monitoring process. An Administrative/General (LAD) record shall be opened on the appropriate Maintenance Process Subsystem (MPS) to record all actions taken in identifying the malfunction and any actions taken by the CMF. In the event the CMF takes corrective action; e.g., system resets, clearing RMM status, setting/changing memory contents and internal status, a Corrective Maintenance (LCM) record shall be created by the CMF on the appropriate MPS.

(b) The appropriate MCC shall be contacted and made aware of any malfunctions detected, even when the CMF was successful in returning the system to normal operation. Reference shall be given to the MCC as to the corresponding LAD/LCM log identification number(s). The entry screens should be filled to the maximum extent possible. The short name and equipment identifiers should indicate the approximate location of the fault. The short names to be used are as follows:

Short Name	Indicates fault in the following major element
SENSOR	Sensors (any sensor)
DCP	Data Collection Platform
CDP	Central Data Platform
DD	Data Distribution

(c) The equipment identifiers to be used are the trailing six characters of the manufacturer's part number. The manufacturer's part numbers are listed in the AWOS maintenance manual, document 223-027A, pages 20-22, table 4.1. The comments field shall contain a detailed description of actions taken to return operation(s) to service. Also, in the comments field, the specialist shall identify any apparent trends.

(2) **MCC**

(a) The MCC will log AWOS events using established procedures other than those addressed in this document. Upon notification by the CMF, the MCC's are responsible for ensuring that corrective action is taken. The MCC's will close the CMF generated LAD entry indicating they have accepted responsibility for the corrective action. If the malfunction results in a loss of service, the MCC's are responsible for advising Air Traffic/Flight Standards, for Notices to Airmen (NOTAM) purposes, of any outages to the AWOS. It is the responsibility of Air Traffic/Flight Standards for the issuance of any AWOS NOTAM's.

(3) **Site technician**

(a) The site technician will log AWOS events in accordance with the latest editions of Orders 6000.15, *General Maintenance Handbook for Airway Facilities*, and 6000.48, *General Maintenance Handbook for Automated Logging*. When interruptions occur which meet the reporting criteria defined in Order 6040.15, *National Airspace Performance Reporting System (NAPRS)*, a Log Interrupt Record (LIR) shall be entered into MMS by the responsible technician or MCC specialist.

Stanley Rivas
for Joaquin Archilla
Director of Airway Facilities