ORDER

6560.28

AUTOMATED WEATHER OBSERVING SYSTEM (AWOS)
DATA ACQUISITION SYSTEM (ADAS)

February 21, 1992

DEPARTMENT OF **TRANSPORTATION**
FEDERAL AVIATION **ADMINISTRATION**

Distribution: A-W(NW/TR/SM/SE/FS/NS)-3; A-X(AF/AT)-3; A-YZ-2; A-FAT-0(Ltd); A-FAF-0(Ltd)

Initiated By: ANW-140

RECORD OF CHANGES

DIRECTIVE NO. 6560.28

CHANGE TO BASIC	SUPPLEMENT			OPTIONAL	CHANGE TO BASIC	SUPPLEMENTS			OPTIONAL

FOREWORD

This order affords information on the program management structure responsible for carrying out the planning and direction for the implementation and integration of the NAS Project No. 23-09 AWOS (Automated Weather Observing System) Data Acquisition System (ADAS) into the National Airspace System (NAS). It defines the role of program management in directing the field deployment of ADAS and describes the supporting roles of the related organizations of the Federal Aviation Administration (FAA) regarding the ADAS program.

Steven M. Hodges
Program Manager for Weather Sensors, ANW-400

TABLE OF CONTENTS

		Page No.
CHAPTER 1.	GENERAL	1
1.	PURPOSE.	1
2.	DISTRIBUTION.	1
3.	BACKGROUND.	1
4.	ACRONYMS AND ABBREVIATIONS.	2
5.	AUTHORITY TO CHANGE THIS ORDER.	3
6.	REFERENCED DOCUMENTS.	3
7.-19.	RESERVED.	3
CHAPTER 2.	PROJECT OVERVIEW	5
20.	SYNOPSIS.	5
21.	PURPOSE.	5
22.-29.	RESERVED.	5
CHAPTER 3.	PROJECT DESCRIPTION	7
30.	FUNCTIONAL DESCRIPTION.	7
31.	INTERFACES.	7
32.	PHYSICAL DESCRIPTION.	8
33.	SYSTEM REQUIREMENTS.	11
34.	ADAS SITE LOCATIONS.	13
35.-39.	RESERVED.	13
	FIGURE 3-1. ADAS GENERAL FUNCTIONAL FLOW DIAGRAM.	14
	FIGURE 3-2. TRANSITION STATE ADAS INTERFACE CONFIGURATION.	15
	FIGURE 3-3. END STATE ADAS INTERFACE CONFIGURATION.	16
	FIGURE 3-4. TYPICAL FLOOR PLAN FOR THE ADAS EQUIPMENT.	17
	FIGURE 3-5. OPERATOR'S WORK AREA FOR THE ADAS SITE CONFIGURATION	18
CHAPTER 4.	PROJECT SCHEDULE AND STATUS	19
40.	PROJECT SCHEDULES AND GENERAL STATUS.	19
41.	MILESTONE SCHEDULE SUMMARY.	19
42.	INTERDEPENDENCIES AND SEQUENCE.	21
43.-49.	RESERVED.	22
	FIGURE 4-1. ADAS PROGRAM SCHEDULE. DEVELOPMENT PHASE.	23
	FIGURE 4-2a. ADAS PROGRAM SCHEDULE. PRODUCTION & DEPLOYMENT PHASE FOR FAA TECHNICAL CENTER.	24
	FIGURE 4-2b. ADAS PROGRAM SCHEDULE. PRODUCTION & DEPLOYMENT PHASE FOR FAA ACADEMY.	25

TABLE OF CONTENTS

		Page No.
	FIGURE 4-2c. ADAS PROGRAM SCHEDULE. PRODUCTION & DEPLOYMENT PHASE FOR FAA FIELD SITES.	26
	FIGURE 4-3. ADAS PROGRAM SCHEDULE. INSTALLATION PHASE.	27
	FIGURE 4-4. ADAS PROGRAM SCHEDULE. LEGENDS AND ACRONYMS.	30
CHAPTER 5.	PROJECT MANAGEMENT	31
50.	PROJECT MANAGEMENT, GENERAL.	31
51.	PROJECT CONTACTS.	33
52	PROJECT COORDINATION.	38
53:	PROJECT RESPONSIBILITIES MATRIX.	38
54.	PROJECT MANAGERIAL COMMUNICATIONS.	38
	FIGURE 5-1. ADAS RESPONSIBILITIES SUMMARY.	39
55.	IMPLEMENTATION STAFFING.	40
56.	PLANNING AND REPORTS.	41
57.	APPLICABLE DOCUMENTS.	42
58.	SPECIFIC RESPONSIBILITIES.	42
59.	RESERVED.	45
CHAPTER 6.	PROJECT FUNDING	47
60.	PROJECT FUNDING ST'S, GENERAL.	47
61.	REGIONAL CONTRACT AUTHORITY.	47
62.-69.	RESERVED.	47
CHAPTER 7.	DEPLOYMENT	49
70.	GENERAL DEPLOYMENT ASPECTS.	49
71.	SITE PREPARATION.	49
72.	DELIVERY.	50
73.	INSTALLATION PLAN.	50
74.	GOVERNMENT-FURNISHED INFORMATION FOR ADAS DEPLOYMENT.	50
75.-79.	RESERVED.	51
CHAPTER 8.	VERIFICATION	53
80.	FACTORY VERIFICATION.	53
81	CHECKOUT.	53
82:	CONTRACTOR INTEGRATION TESTING.	53
83.	CONTRACTOR ACCEPTANCE INSPECTION (CAI).	54
84.	FAA INTEGRATION TESTING.	54
85.	SHAKEDOWN AND CHANGEOVER.	54
86.	JOINT ACCEPTANCE INSPECTION (JAI).	55
87.	CONFIGURATION MANAGEMENT.	55
88.	QUALITY ASSURANCE.	56

TABLE OF CONTENTS

		Page No.
89.	INDEPENDENT VERIFICATION AND VALIDATION (IV&V).	56
CHAPTER 9.	INTEGRATED LOGISTICS SUPPORT	59
90.	MAINTENANCE CONCEPT.	59
[illegible].	TRAINING.	59
[illegible].	SUPPORT TOOLS AND TEST EQUIPMENT.	60
[illegible].	SUPPLY SUPPORT.	60
[illegible].	VENDOR DATA AND TECHNICAL MANUALS.	61
[illegible].	EQUIPMENT REMOVAL.	61
[illegible].	FACILITIES.	61
[illegible].	PROGRAM SUPPORT FACILITY (PSF).	61
98.-99.	RESERVED.	61
CHAPTER 10.	ADDITIONAL PROJECT IMPLEMENTATION ASPECTS	63
1007109.	RESERVED.	63
APPENDIX 1.	ACRONYMS	1
APPENDIX 2.	REFERENCES	1
APPENDIX 3.	ADAS SITE LISTINGS AND INSTALLATION SCHEDULE	1
APPENDIX 4.	COMPARATIVE SCHEDULES FOR NAS SYSTEMS	1

CHAPTER 1. GENERAL

1. PURPOSE. This order establishes a project implementation plan (PIP) and a program management plan for the Automated Weather Observing System (AWOS) Data Acquisition System (ADAS). Its primary purpose is to define management roles and policies and supporting organizations' responsibilities for implementation and integration of ADAS into the National Airspace System (NAS). This order relates to the planning required for the implementation of 25 ADAS systems obtained under competitive procurement.

2. DISTRIBUTION. This order is distributed to branch level in the office of the Program Director for Weather and Flight Service Systems, Air Traffic Plans and Requirements, Systems Maintenance, NAS System Engineering, Flight Standards, and the NAS Transition and Implementation Services; to branch level in the regional Airway Facilities and Air Traffic divisions; to division level at the Mike Monroney Aeronautical Center and FAA Technical Center; and limited distribution to the Airway Facilities and Air Traffic field offices.

3. BACKGROUND.

a. Requirements. The NAS System Specification (NAS-SS-1000) establishes the system requirements for ADAS as part of the overall National Airspace system (NAS) Plan. Each ADAS is to serve as a concentrator and disseminator of data from selected AWOS sites within its area, to downstream NAS surface observation users. AWOS observations are taken at over 1,000 locations within the United States by the FAA, the National Weather Service (NWS), the Department of Defense (DOD), and the commercial aviation sector. The continued growth of aviation and the continual need to improve the safety of flights indicate the need to disseminate localized surface weather observations to remote (nationwide) aviation audiences via components of the NAS.

b. Benefits. FAA-APO-8306, Establishment and Discontinuance Criteria for Automated Weather Observing System (AWOS), dated May 1983, presented distinct favorable factors substantiating AWOS expenditures. ADAS provides the distribution of AWOS data to the national community of aviation weather users.

c. History and Background.

(1) The ADAS conceptwas firstpresented in January 1984 by the Surveillance and Sensors Division (MS-53), Transportation System Center (TSC), Cambridge, Massachusetts, in a proposal for a Data Acquisition and Dissemination System (DADS) for AWOS surface weather observations.

(2) In December 1984, DTS-53 was tasked by the FAA with the planning, analysis, design, and implementation of an ADAS Demonstration Project (ADAS/DP). The purpose of this project was to assist the FAA in establishing the functional and performance requirements for the ADAS, andsubsequentlyto provide the design for the ADAS application software. The ADAS/DP was to consist of a single prototype ADAS, together with an associated prototype Interactive Process Simulator (IPS). Initial ADAS/DP requirements were to be derived in part from the NAS-SS-1000, and in part from the evolving Interface Control Documents (ICD) and Interface Requirements Documents (IRD). on successful completion and demonstration of the ADAS/DP to the FAA, the system software design was to have been incorporated in the procurement process for ADAS.

(3) In March 1985, APM-650 directed a procurement release for the ADAS/DP. At the same time, AES-210 prepared a NAS System Requirements Specification (NAS-SR-1000) that presented operational requirements for the ADAS.

(4) In June 1985 the FAA's System Engineering and Integration (SEI) contractor completed draft portions of the NAS-SS-1000 that contained requirements for AWOS and ADAS.

(5) On July 18, 1985 AES-210 issued the AWOS Data Acquisition System (ADAS) Functional Requirements Memorandum, establishing initial ADAS requirements.

(6) In August 1987 the ADAS/DP project was canceled and the ADAS competitive procurement was announced by APM-650. In September 1987, DTS-53 was authorized to produce the ADAS System Specification (FAA-E-2804) for incorporation in the Request for Proposal (RFP). FAA-E-2804 was developed to comply with NAS-SS-1000 and was baselined March 24, 1988.

(7) MS-53 was tasked with providing the AWOS/ADAS ICD. The draft ICD was issued in April 1988 in accordance with NAS-SS-1000, and was baselined in November 1988. This ICD was revised and rebaselined September 1989.

(8) The ADAS RFP was issued by ALG-310 for competitive bidding on July 8, 1988. Receipt of bidder proposals was closed on October 19, 1988. The contract was awarded on September 8, 1989, to Communications and Power Engineering, Inc. (CommPower), Camarillo, California.

4. ACRONYMS AND ABBREVIATIONS. A list of acronyms and abbreviations related to this order is presented in appendix 1.

5. AUTHORITY TO CHANGE THIS ORDER. This order may be changed only by the Program Manager for Weather Sensors, ANW-400. Requests for changes to this document should be directed to the ADAS Program Manager, FAA (ANW-400), 800 Independence Avenue, SW, Washington, D.C. 20591.

6. REFERENCED DOCUMENTS. A list of referenced documents and other relevant documents of general interest is presented in appendix 2.

7.-19. RESERVED.

CHAPTER 2. PROJECT OVERVIEW

20. SYNOPSIS.

a. Design Concept. ADAS is designed to provide acquisition, processing, concentration, archival, and distribution of AWOS observations. A total of 25 such systems are being procured. The ADAS will be installed in each of the 23 Air Route Traffic Control Centers (ARTCC), the FAA Technical Center, and the FAA Academy of the FAA Aeronautical Center (AAC-940). Each operational system is to acquire observation data from up to 137 AWOS sites within the ARTCC's area, process and concentrate the data, perform data archival, and disseminate the information to external NAS users via telecommunications links. NAS users will include Real-time Weather Processors (RWP), Data Link Processors (DLP), and the Weather Message Switching Center Replacement (WMSCR). Although the design goal of ADAS is for unattended operation, ADAS will have an attended operation capability as well. The ADAS design will allow for operational expansion through the addition of new telecommunications interfaces to external NAS systems, and through the addition of new AWOS sites up to a total of 137. For the purpose of this document, the term AWOS may be used synonymously with the NWS acronym ASOS (Automated Surface Observing System) and the DOD acronym AOS (Automated Observing System).

b. Acquisition Concept. The FAA is procuring 25 ADAS units by contract. The ADAS contractor will provide all hardware/software, delivery, checkout, installation, and contract depot maintenance for the lifetime of the operational ADAS. The contract requirements are based on the ADAS System Specification (FAA-E-2804); supplementary requirements are contained in the ADAS/external-system IRD's and ICD's (see appendix 2).

21. PURPOSE. The objective of ADAS is to provide AWOS surface weather observations to weather-related NAS users (RWP, DLP, WMSCR) in order to:

a. Increase safety by providing pilots with information necessary to make correct operational decisions.

b. Improve efficiency by providing information necessary for more frequent evaluations of airport landing minimums.

c. Provide the regulatory requirements for weather information to commercial operations for altimeter settings, wind, visibility, and ceiling.

22.-29. RESERVED.

CHAPTER 3. PROJECT DESCRIPTION

30. FUNCTIONAL DESCRIPTION. ADAS is a data collection, archival, processing, and redistribution system that concentrates and disseminates AWOS surface weather observation data to other subsystems of the NAS (RWP, DLP, and WMSCR). ADAS will provide AWOS weather observation updates to RWP and DLP every min., and to WMSCR as required by special conditions as well as every hour. ADAS will be located at each of 23 ARTCC's, and will acquire data from up to 137 AWOS within its area. ADAS is designed for eventual unattended operation at the end state of the NAS, with the provision of an interactive user interface for the purposes of startup, initialization, configuration, and maintenance. ADAS will operate as a locally observed system during the intervening NAS transition state, where the user interface will be utilized for the purpose of status monitoring as well as for configuration and maintenance. ADAS will be sufficiently flexible to allow for operational expansion through the addition of new telecommunications interfaces to external NAS systems. A block diagram of the AD.. functional roles is shown in figure 3-1.

31. INTERFACES. ADAS will maintain interfaceswithavarietyof external systems. The implementation of some of these interfaces will depend on the current state of the NAS communications configuration.

a. Each ADAS/external system interface will be designed and developed in accordance with the requirements of the respective IRD or ICD, as well as with the requirements of the ADAS System Specification (FAA-E-2804). Interface additions and updates will be defined as changes to this implementation plan or in the appropriate implementation plans for new NAS elements. The interfaces to be implemented, with category and specification, are given as follows:

(1) Federal and Nonfederal AWOS. Weather observation source (FAA-NAS-IC-25083101-01.A, AWOS/ADAS Interface Control Document).

(2) Nws Asos. Weather observation source (FAA-NAS-IC-25083101-01.A, AWOS/ADAS Interface Control Document).

(3) DOD AOS. Weather observation source (FAA-NAS-IC-25083101-OLA, AWOS/ADAS Interface Control Document).

(4) WMSCR (Weather Message Switching Center Replacement]. Weather data end user (FAA-NAS-IC-25082507-00, WMSCR/ADAS Interface Control Document).

(5) RWP (Real-time Weather Processor). Weather data end user (FAA-NAS-IC-25082501-00, RWP/ADAS Interface Control Document).

(6) DLP (Data Link Processor). Weather data end user (FAA-NAS-K-25082503, DLP/ADAS Interface Control Document).

(7) MPS (Maintenance Processor Subsystem). End state only. Remote maintenance monitor (FAA-NAS-IR-51030002, MPS Automation Interface Requirements Document).

(8) CTS (Coded Time Source). Standard time source (FAA-NAS-IR-92020000A, CTS/User Systems Interface Requirements Document).

(9) National Airspace Data Interchange Network (NADIN) Packet Switched Network (PSN). Transition state only. Communications medium (FAA-NAS-IC-43020001-00, NADIN PSN X.25 Interface Control Document).

(10) LCN (Local Communications Network). End state only. Communications medium (FAA-NAS-IR-21020000, LCN/User System Interface Requirements Document).

b. The NAS communications configuration will be characterized by an interim transition state, to be followed by an end state.

(1) Transition State. For the ADAS, the transition state interface configuration will be characterized by utilization of the NADIN PSN for indirect communication between the ADAS and each NAS endprocesscr (WMSCR, RWP, DLP). All of the ADAS are scheduled to be delivered and installed during the transition state. Figure 3-2 shows the transition state ADAS interface configuration.

(2) End State. The end state will be characterized by the implementation of the NAS LCN at each ARTCC in the 1996/1997 timeframe. Upon the implementation of the LCN the ARTCC's will become known as Area Control Facilities (ACF). The LCN will then link ADAS directly to ACF-collocated NAS processors (RWP, DLP, MPS), and serve as the gateway to the NADIN PSN for remote NAS processors (WMSCR). The term "ARTCC" will continue to be used throughout this document when referring to facilities prior to the end state. Figure 3-3 shows the end state ADAS interface configuration.

32. PHYSICAL DESCRIPTION. ADAS physical equipment will be installed in a conditioned space maintained to a normal indoor working environment. The ADAS equipment may be categorized as the data processors proper, peripheral equipment, andancillary equipment (including consumable supplies).

a. ADAS Data Processors will consist of a controlling Host processor and a set of intelligent telecommunications processors.

(1) The Host processor will accept data inputs, perform data processing and archival functions, and prepare weather observation messages for communication to other NAS users. The Host processor will be responsible formaintainingreal-time system control and maintenance diagnostic functions. The Host processor is configured as a Motorola model MVME 147SA-1 single board computer with an MC68030 central processing unit (CPU) and an MC68882 floating pointcoprccessor, and is provided with front panel controls and indicators for the purpose of fault isolation and repair by replacement. The Host processor will be supplied with 8 megabytes of dynamic random access memory (DRAM), a small computer system interface (SCSI) mass storage controller, four serial interface controllers, one parallel printer controller, a dial-up modem for remote maintenance, and a power supply with 500 watts output capacity which is housed in a rack mountable Motorola VME chassis. Host processor software willexecute under the UNIX operating system.

(2) The communications processors will provide the direct links to the ADAS external interfaces for input and output. One Motorola model MVME 333X25 dual channel communications controller per ADAS will be applied to the NADIN (transition state) and LCN (end state) interfaces and will provide the combined DLP/RWP/WMSCR/MPS communications functions. Up to eight Motorola model MVME 333-2 six-channel communications controllers per ADAS will be applied to all AWOS interfaces and to the CTS interface. Both types of controller utilize an MC68010 CPU and are provided with 512 kilobytes of DRAM, an MC68450 direct memory access controller, and three 28530 serial interface controllers.

b. System Peripheral Equipment for Operational Sites. Peripheral equipment for ADAS operational sites located at ARTCC's will consist of the following mass storage, display, and hard-copy devices:

(1) One fixed disk drive with 150 megabytes formatted capacity.

(2) One cartridge tape drive with 150 megabytes formatted capacity.

(3) One floppy disk drive with .65 megabytes formatted capacity.

(4) Two video display terminals (VDT) with individual keyboards. One VDT will serve as the ADAS system console (ASC) and the other will serve as the UNIX console. All VDT's are supplied with power and interface cabling.

(5) Two printers. One printer will serve as the ASC log and the other will serve as the ADAS system event hard-copy device. All printers are supplied with power andinterfacecabling.

c. System peripherals and other equipment for non-operational sites.

(1) The FAA Technical Center site will include the following equipment in addition to or instead of the operational site configuration:

(a) Two VDT's with individual keyboards. One VDT will serve as a test console and the other will serve as a software development terminal.

(b) Two printers. One printer will serve as a test log printer and the other will serveasthesoftwaremaintenanceprinter.

(c) PSF/IPS-1 system will support the Development Test and Evaluation (DT&E) phase of the ADAS project as performed at the FAA Technical Center. The processor and peripheral complement for this configuration includes the following equipment: the Host processor with a Motorola model MVME 147SB-2 single board computer and 16 megabytes ofdynamicrandmaccess memory in place of the single board computer configured in the operational site configuration, a full set of communications processors asdescribed previously, one fixed head disk drive with 600 megabytes of formatted capacity, one cartridge tape drive with 150 megabytes of formatted capacity, one floppy disk drive with .65 megabytes of formatted capacity, two video display terminals allocated as one UNIX console and one software development terminal, two test log printers, andothermiscellaneous equipment as described in the Prime Item Development specification, type B1 (PIDS-B1).

(d) The Host processor of the operational site configuration will contain a Motorola model MVME 147SB-2 single board computer and 16 megabytes of dynamic random access memory as replacement for the Motorola model MVME 147SA-1 single board computer contained in the operational site configuration.

(2) The FAA Academy site will include the following equipment in addition to or instead of the operational site configuration:

(a) Twelve VDT's with individual keyboards. These VDT's will serve as additional ASC's for training purposes.

(b) IPS-2 system will facilitate the training of ADAS operators at the FAA Academy by supplying simulated weather data and imitateconnections to external devices. The equipment complement for IPS-2 will include the following: one Host processor in which the single board computer is upgraded to a Motorola model MVME 147SB-2, a full set of communications processors as previously described, one fixed head disk drive with 300 megabytes of formatted capacity, one cartridge tape drive with 150 megabytes of formatted capacity, one floppy disk drive with .65 megabyte of formatted capacity, two video display terminals allocated as one UNIX console and one test console, two test log printers, andothermiscellaneous equipment as described in the PIDS-B1 document.

(c) For the operational site configuration, the single board computer will be updated with a Motorola model MVME 147SB-2 and 16 megabytes of shared onboard DRAM to enhancetheoperational characteristics of the Host processor.

(3) The Portable IPS/IPS-3 will provide a simulated environment of weather data products and ADAS interfaces for the performance of ADAS Site Acceptance Tests (SAT) and will be delivered to the FAA Technical Center at the conclusion of all field SAT. The equipment configuration for this system will contain the following: one Host processor with requisite power supply, Motorola VME chassis, and control and alarm panel; intelligent telecommunications processors, including one NADIN/LCN communications controller and eight AWOS communications controllers; one fixed disk drive with 300 megabytes of formatted capacity; one cartridge tape drive of 150 megabytes of capacity; one floppy disk drive of .65 megabyte of formatted capacity; two VDT's, allocated as one UNIX console and one test console; two test log printers; five ruggedized shipping containers for forwarding the IPS-3 hardware to ARTCC's; and other miscellaneous equipment as described in the PIDS-B1.

e. Ancillary Equipment. The Host processor, communications processors, and mass storage devices along with a power distribution panel, remote maintenance interface, and control and alarm panel will reside in a five foot 19" cabinet assembly for stand alone units or a 19" enclosure assembly for the portable IPS. A separate table assembly will uphold the video display terminals andadualprinter standwill contain the printers. A single power strip with six power plugs will be housed in the cabinet assembly and will provide power distribution for all ADAS equipment units. Each of the power strip plugs will be provided with an individual 8 A circuit breaker. All intemal power and interface cabling, aswellaswiringandcablingto extemal interface connectors will be supplied by the ADAS contractor. Provision of the external interface connectors will be the responsibility of ASM-300. Provision of consumable supplies (printer paper, diskettes, tapes, etc.) will be the responsibility of the regions.

33. SYSTEM REQUIREMENTS. Functional specific requirements for the FAA facilities housing the ADAS are detailed in the ADAS system specification (FAA-E-2804, chapter 3), the ADAS Prime Item Development Specification (PIDS, Contract Data Requirements List (CDRL) item A024), and (for operational sites) in NAS-IR-61002508, Area Control Facility to AWOS Data Acquisition System (ACF/ADAS IRD).

a. Space.

(1) Operational sites. Within ARTCC's, ADAS equipment is to be installed and housed in a single 10 x 12 foot space. A raised floor for this area will be required for cooling. Equipment dimensions will not exceed the 6

feet wide x 7 feet high ARTCC transportability limits. Cabinets and frames will not exceed floor loading of 125 lb/sq ft (figure 3-4 provides a diagram of a typical floor plan for the ADAS equipment, and figure 3-5 illustrates the operator's work area of the ADAS site configuration).

(2) FAA Technical Center. For the FAA Technical Center, the Operational Site Configuration (OSC) and the PSF/IPS-1 configuration will reside in 196 square feet (14' x 14') of space for the ADAS System Processor, the IPS System Processor, and the associated peripheral devices, tables, and printer stands. The ADAS Site Unique Plan - FAA Technical Center (CDRL A037-401) should be consulted for detailed information concerning the placement of cabinets and peripheral equipment, location and routing of alternate current (AC) power and ground cable, and the routing of the interface cables.

(3) FAA Academy The FAA Academy will receive an Operational Site Configuration with an Interactive Process Simulator (IPS) housed in two separate cabinets which will move between the computer lab and the classrom. The twelve VDT terminals will reside in the classrom for instructional purposes. For detailed information concerning the placement of peripherals and the routing of power and interface cables, the ADAS Site Unique Plan - FAA Academy (CDRL A037-402) should be consulted.

(4) Portable IPS/IPS-3. For the Portable IPS/IPS-3, five ruggedized shipping containers will contain the equipment which are unboxed and assembled on three 6 ft. by 3 ft. tables for performing SAT at the ARTCC.

b. Power.

(1) Operational sites. ADAS equipment will utilize the essential power system of the facility and will operate from a 115 V (± 10 percent), 60Hz (± 5Hz), three-wire single phase service. The ADAS equipment will require a single connection from the facility power. At the operational sites, power consumption will range from a typical value of 680 watts to a maximum of 1268 watts. The facility power connection will require a single 20 A circuit breaker for a maximum load of 13.8 A. Power requirements and power system connectors shall be in accordance with FAA-G-2100e, Electronic Equipment, General Requirements. Wiring, cabling, shielding, and grounding for the ADAS shall be in accordance with FAA-STD-019a, Lightning Protection, Grounding, Bonding, and Shielding Requirements for Facilities, and FAA-STD-020a, Transit Protection, Grounding, Bonding, and Shielding Requirements for Equipment. Unique power requirements for each site are found in the ADAS Site Unique Plans (CDRL A037).

(2) FAA Technical Center. Power requirements at the FAA Technical Center will necessitate installation of two 15 A, 3 phase circuit breakers within 8 feet of the ADAS and IPS cabinets asdefined in the ADAS Installation

and Checkout Plan (CDRLA037) and the ADAS Site Unique Plan - FAA Technical Center Atlantic City, NJ (CDRL A037-401). Power required to support the utilization of the additional ADAS equipment at this facility (an IPS system) will average 1360 watts with a maximum of 2536 watts expected.

(3) FAA Academy. Power for the FAA Academy will be supplied on one 30 A, 3 phase circuit breaker that is installedwithin 8 feet of the combined ADAS/IPS cabinet. Power required to support the utilization of the ADAS equipment at this facility (OSC, IPS, and 12 VDT's) will range from a typical wattage of 1900 to a maximum of 3135 watts. Further information is available in the ADAS Installation and Checkout Plan (CDRL A037) and the ADAS Site Unique Plan - FAA Academy Oklahoma City, OK (CDRL A037-402).

(4) Portable IPS/IPS-3. During Site Acceptance Testing (SAT), the Portable IPS/IPS-3 will require temporary power during testing and validation of the ADAS equipment. This additional power will emanate from the nearest receptacle and require the same power consumption as an operational site.

c. Access. ADAS equipment at all facilities will provide front and/or rearaccess as specified in FAA-E-2804 for maintenance and repair activities. Floor mounted equipment will provide cable access through the bottom of the equipment.

d. Interfaces. ADAS subsystem external interface cable routing requirements will be determined during site surveys (see paragraph 71).

34. ADAS SITE LOCATIONS. ADAS site locations are listed in appendix 3.

35.-39. RESERVED.

FIGURE 3-1. ADAS GENERAL FUNCTIONAL FLOW DIAGRAM.

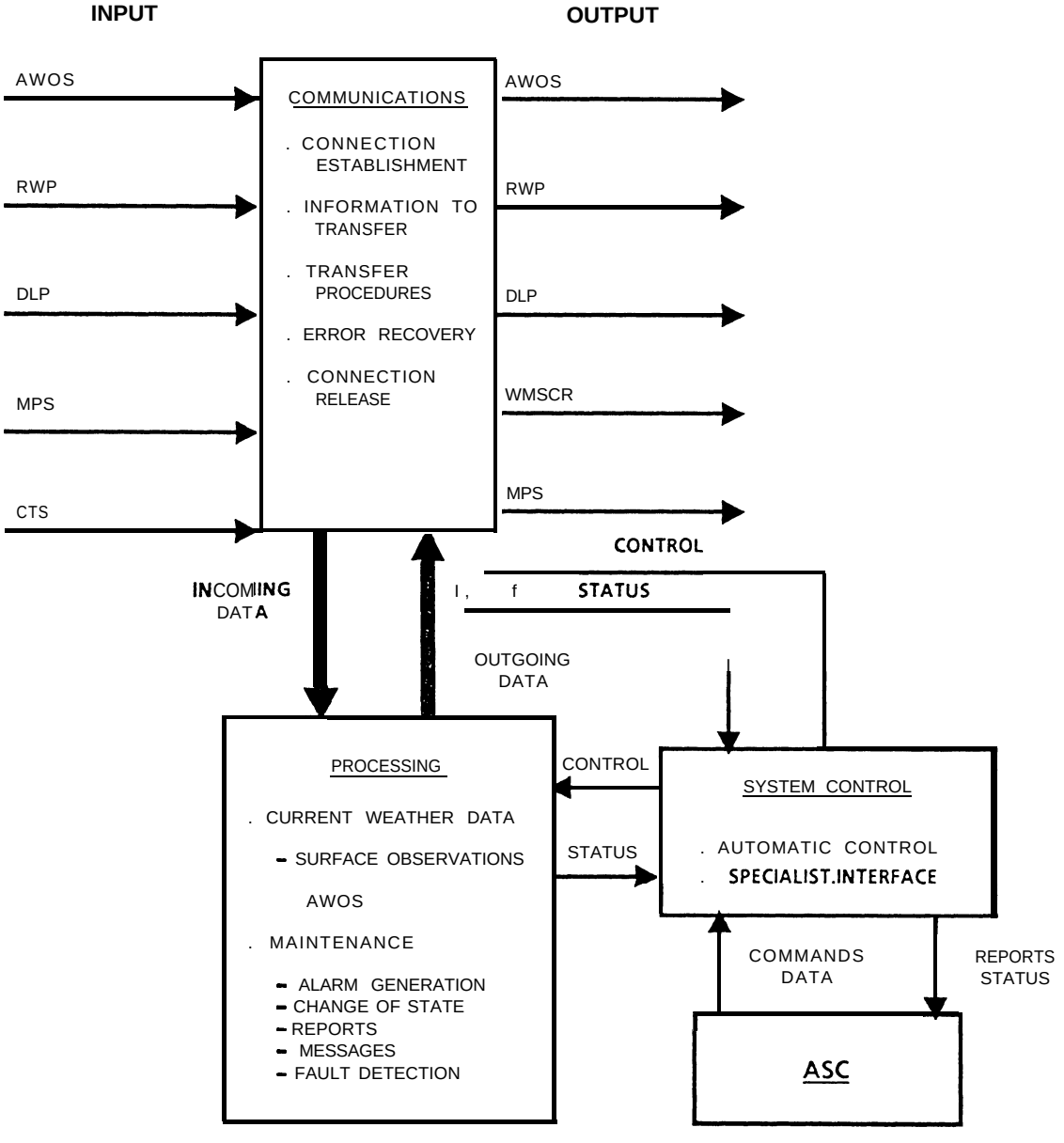

FIGURE 3-2. TRANSITION STATE ADAS INTERFACE CONFIGURATION.

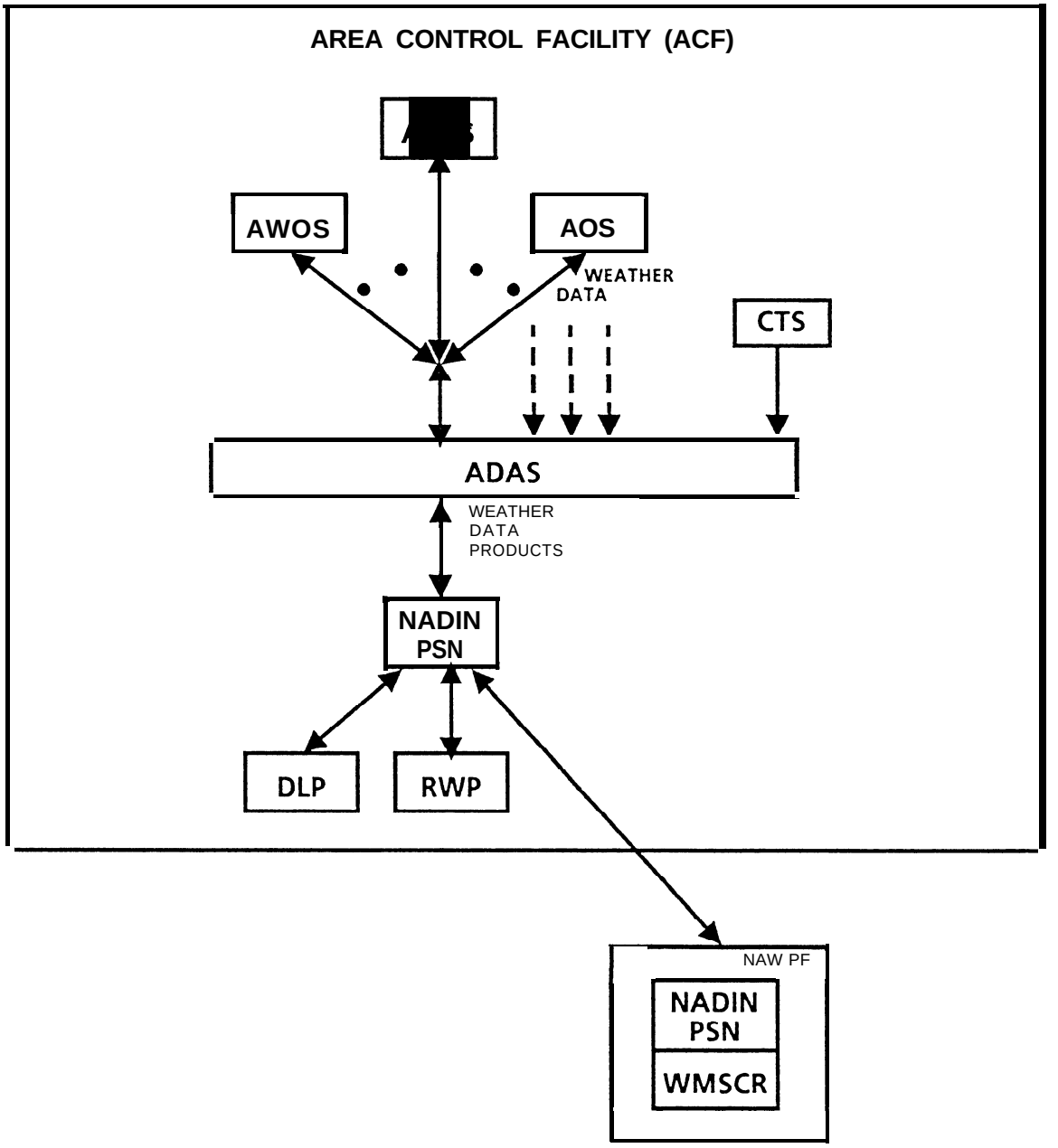

FIGURE 3-3. ENDSTATEADAS INTERFACE CONFIGURATION.

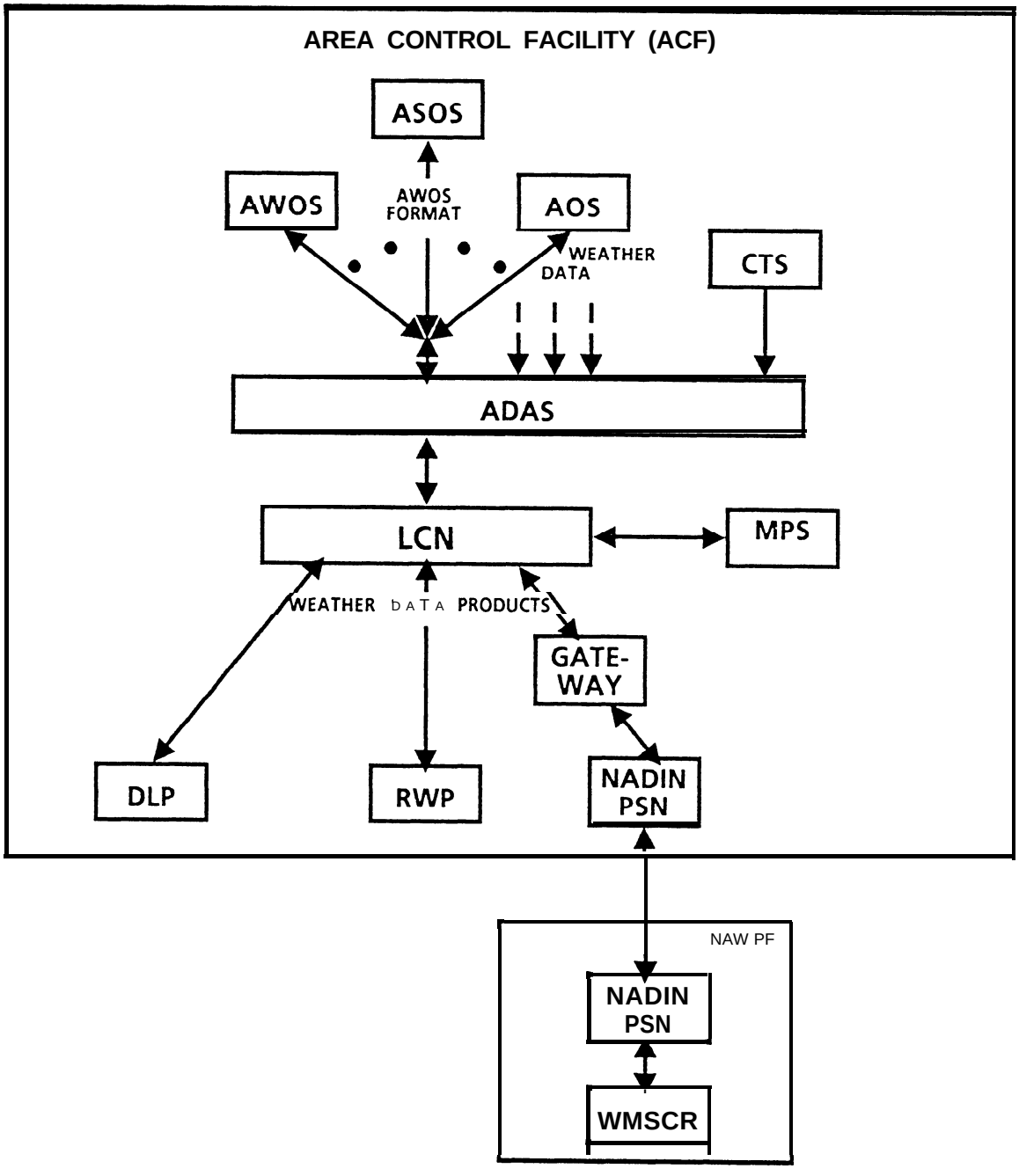

FIGURE 3-4. TYPICAL FLOOR PLAN FOR THE ADAS EQUIPMENT.

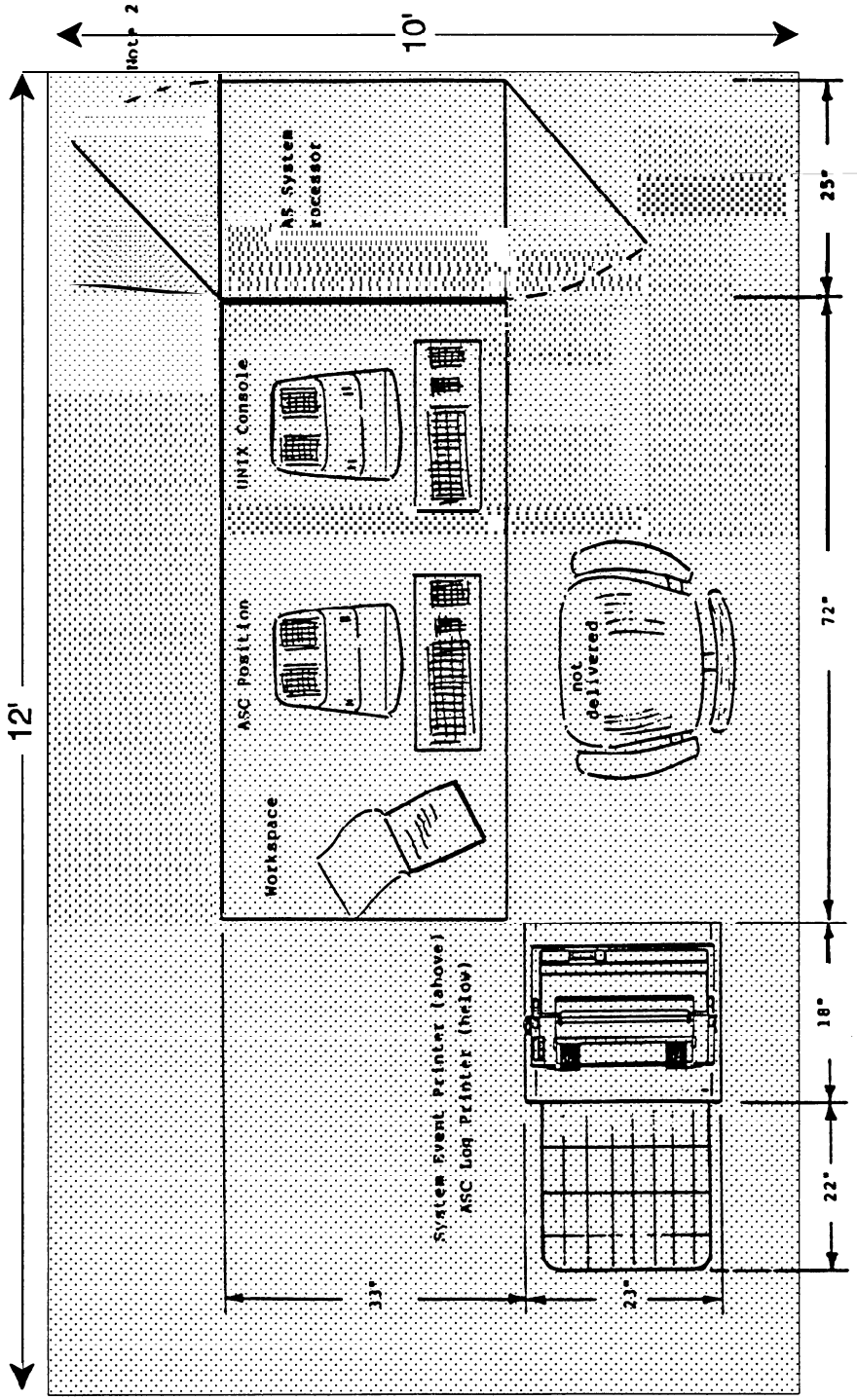

Note 2: Service access space of 4 feet behind the ADAS System Processor is included.

FIGURE 3-5. OPERATOR'S WORK AREA FOR THE ADAS SITE CONFIGURATION.

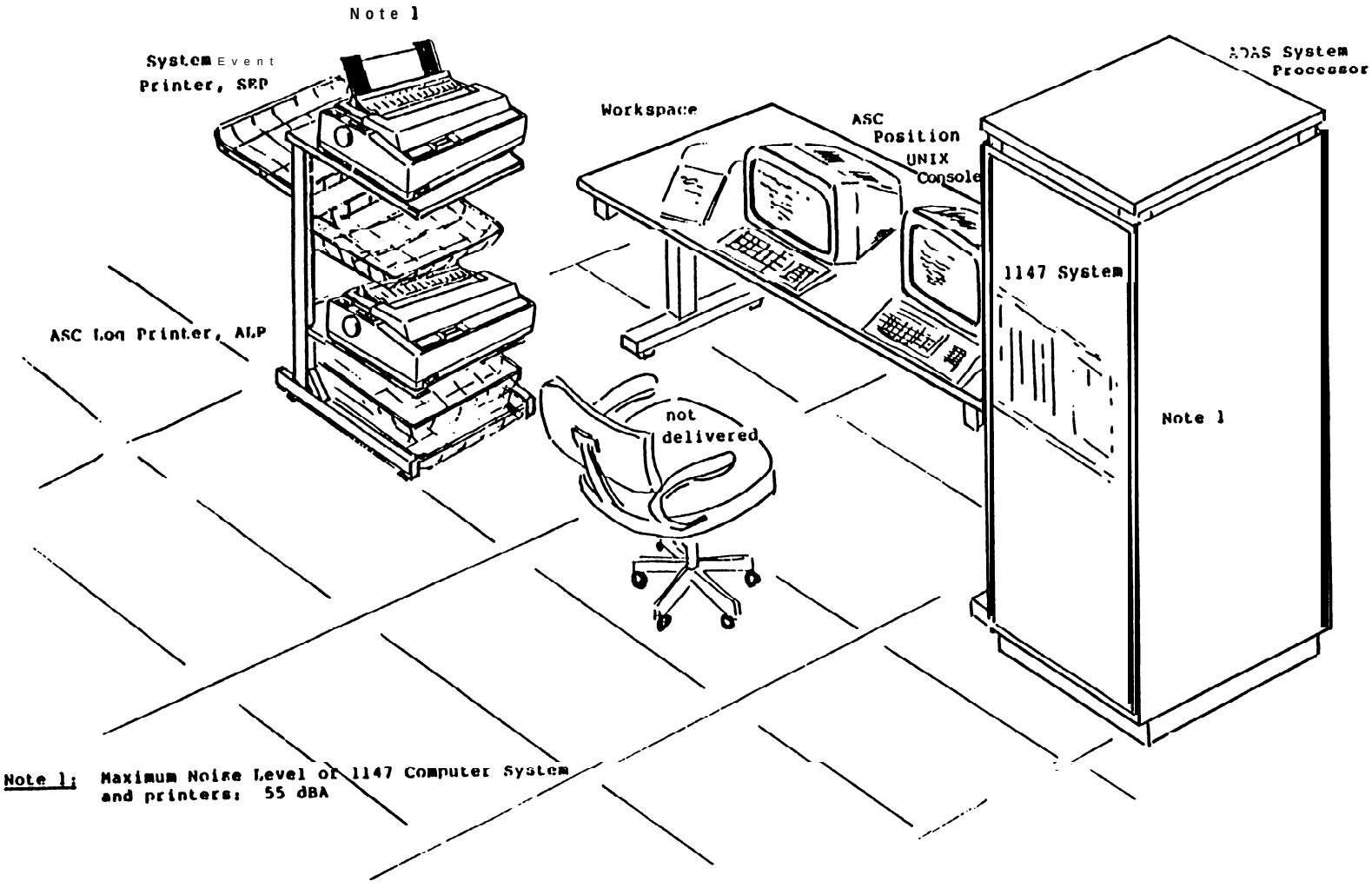

Note 1: Maximum Noise Level of 1147 Computer System and printers: 55 dBA

CHAPTER 4. PROJECT SCHEDULE AND STATUS

40. PROJECT SCHEDULES AND GENERAL STATUS. The ADAS procurement schedule was established in July 1988 with the issuance of the commercial RFP. Bidder proposals were closed in October 1988, and the ADAS contract was awarded to CommPower on September 8, 1989. The ADAS development phase is underway, with first site delivery scheduled for October 12, 1992.

41. MILESTONE SCHEDULE SUMMARY. An overall schedule of major milestones is shown in figure 4-1 through figure 4-4.

a. Development Phase Events and Reviews. A number of key milestone events occur prior to the decision for deployment of ADAS. These events typically generate action items for FAA and/or contractor resolution. All fomalreviewevents andconferences areconducted in accordancewith MIL-STD-1521, Technical Reviews and Audits for Systems, Equipments, and Computer Software. The following events took place on the indicated dates, with the first four events conducted jointly.

(1) Post-Award Conference (PAC), October 17, 1989. Individual roles, responsibilities, and channels of communication were identified for the ADAS contract.

(2) System Requirements Review (SRR), October 17, 1989. Agreement was reached between the FAA and the contractor on the interpretation of the ADAS requirements as presented in the ADAS System Specification, FAA-E-2804.

(3) Logistics Guidance Conference (LGC), October 18, 1989. The FAA reviewed the contractor's logistics support program and indicated how this program should be carried out to satisfy the FAA's requirements.

(4) Provisioning Guidance Conference (PGC), October 18, 1989. The FAA reviewed the contractor's understanding of ADAS spares provisioning and provided guidance to the contractor for complying with spares provisioning requirements.

(5) Technical Interchange Meeting 1 (TIM-l), December 12, 1989. Outstanding technical issues from the previous four conferences, open Requests For Action (RFA), and new technical issues were discussed between the contractor and the FAA.

(6) Project Status Meeting 1 (PSM-1), December 12, 1989. The status of CDRL deliverables/FAA approvals, current RFA's, and general scheduling issues were discussed between the contractor and the FAA.

(7) Software Specification Review (SSR), January 23, 1990. The ADAS software requirements and operational concept were reviewed by the FAA and the contractor. The Software Requirements Specification and Interface Requirements Documentsweredisscussed.

(8) Preliminary Design Review (PDR), January 23-24, 1990. Hardware and software development activities to date were reviewed by the FAA and the contractor. Documentation baselines, production planning, maintenance support, reusable software, and site surveys were reviewed. The Software Top Level Design Document and the Master and Software Test Plan documents were discussed. Splinter groups addressedthetopics of Highlevel Data Link control (HDLC) protocol options andtesting, training, contractor schedules, and configuration management.

(9) Technical Interchange Meeting 2 (TIM-2), April 10, 1990. The FAA and the contractor discussed technical issues arising from the PDR and the TIM-1, cmmnicationstechnicalissues, pending contract mods, and other technical issues. Current action items were reviewed.

(10) Project Status Meeting 2 (PSM-2), April 11, 1990. The status of CDRL deliverables/FAA approvals, current RFA's, general scheduling issues, and contract managementissuesweretreviewedanddiscussedbetweenthe contractor and the FAA.

(11) ADAS National Conference, June 27, 1990. This meeting was attended by regional and facility representatives, and presented matters of interest to the ADAS deployment sites. Presentationswereconductedregarding site surveys, training, Operational Test and Evaluation (OT&E)/integration, OT&E/shakedown, themaintenance plan, and the ADAS PIP.

(12) Critical Design Review (CDR), July 30-August 1, 1990. The principal subject of this review was the status of the Prim Item Development Specification, the Software Detailed Design Document, the ICD's, and the Software Test Descriptions. The subjects of testing, training, installation, logistics, maintenance, requirements traceability, quality assurance, and configuration management were reviewed and discussed in addition.

(13) Critical Design Review #2 (CDR #2), June 26, 1991-January 31, 1992. This review focussed entirely on the design changes mandated by the MPS contract modification (Contract Mod 0008). The following CDRLs were discussed during CDR #2: B1-PIDS specification (CDRL A024), Software Detailed Design Document (CDRL A022), MPS ICD (CDRL A016), Master Test Plan (CDRL A026), Software Test Plan (CDRL A026), Software Test Plan (A027), Software Test Descriptions (CDRL A028), and Software Test procedures (CDRL A029).

(14) Production Decision, February 12, 1993. This milestone is the start of the production phase of the ADAS project. At this point, the contracting officer will provide an authorization to proceed notice to the contractor. Prior to receipt of the authorization to proceed notice, the contractor shall not acquire any materials, components or hardware for, nor commence with the ADAS production system.

b. Future events. The following events are scheduled for the indicated dates.

(1) Test Readiness Review (TRR) - May 7, 1992.

(2) Factory Acceptance Test (FAT) - June 16-29, 1992.

(3) Formal Qualification Review (FQR) - September 21, 1992.

(4) Deployment Readiness Review (DRR) - February 12, 1993.

The functions of the Functional Configuration Audit (FCA) and the Physical Configuration Audit (PCA) will be incorporated in the Formal Qualification Review (FQR). The FAT will be that performed on the first manufactured ADAS (specified as Contract Line Item Number (CLIN) 0001), and will mark the completion of the development phase of the ADAS.

c. Systems Delivery and Installation. Delivery of the 23 systems to the operational sites is scheduled to begin in May 1993, and to continue at the rate of approximately one system per month through February 1995. The first two systems are to be delivered to the FAA Technical Center (Program Support Facility, ASM-400, where UT&E/integration, OT&E/shakedown, and ADAS software maintenance will be performed) and to the FAA Academy (AAC-900), respectively. The first operational installation will be at the Seattle, Washington ARTCC in May 19930 The ADAS delivery and installation schedule is shown in appendix 3 and figure 4-3.

42. INTERDEPENDENCIES AND SEQUENCE. ADAS has the following interdependencies with other systems that will affect its operational capability.

a. Data acquisition. Within the ARTCC area of each ADAS, the number of operational AWOS, ASOS, and AOS sites will determinetheamuntof surface observation data available to the ADAS. ADAS will have the flexibility to adapt to new AWOS connections through onsite modifications to its adaptation data set, to a maximum of 137 AWOS sites per ADAS. Such onsite modifications will be performed by region personnel designated as ADAS specialists.

b. Data dissemination. ADAS weather data products will be disseminated to the RWP, DLP, and WMSCR. An RWP and a DLP will be collocated with an ADAS at an ARTCC. The WMSCR will be remote to the ARTCC. The capabilities and readiness of these processors will determine the amount of processed and concentrated weather products to be disseminated by the ADAS. Operational readiness demonstration (ORD) for the NADIN PSN is currently scheduled for August 1992, Integration of the ADAS with the NADIN will commence in October 1992 for those AD.. already installed, and proceed at the rate of one site per week. ORD for the WMSCR is scheduled for December 1992. Cmparative schedules for the ADAS, DLP, and RWP are given for each site inappendix 4.

c. Maintenance data interchange. The ADAS will have an internal maintenance processing capability for the purpose of effecting maintenance data interchange locally through the ASC to an ADAS specialist. In the end state ADAS interface configuration, the MPS located within the ACF will be the remote maintenance interfacing processor to the ADAS via the LCN.

43.-49. RESERVED.

FIGURE 4-1. ADAS PROGRAM SCHEDULE.
DEVELOPMENT PHASE.

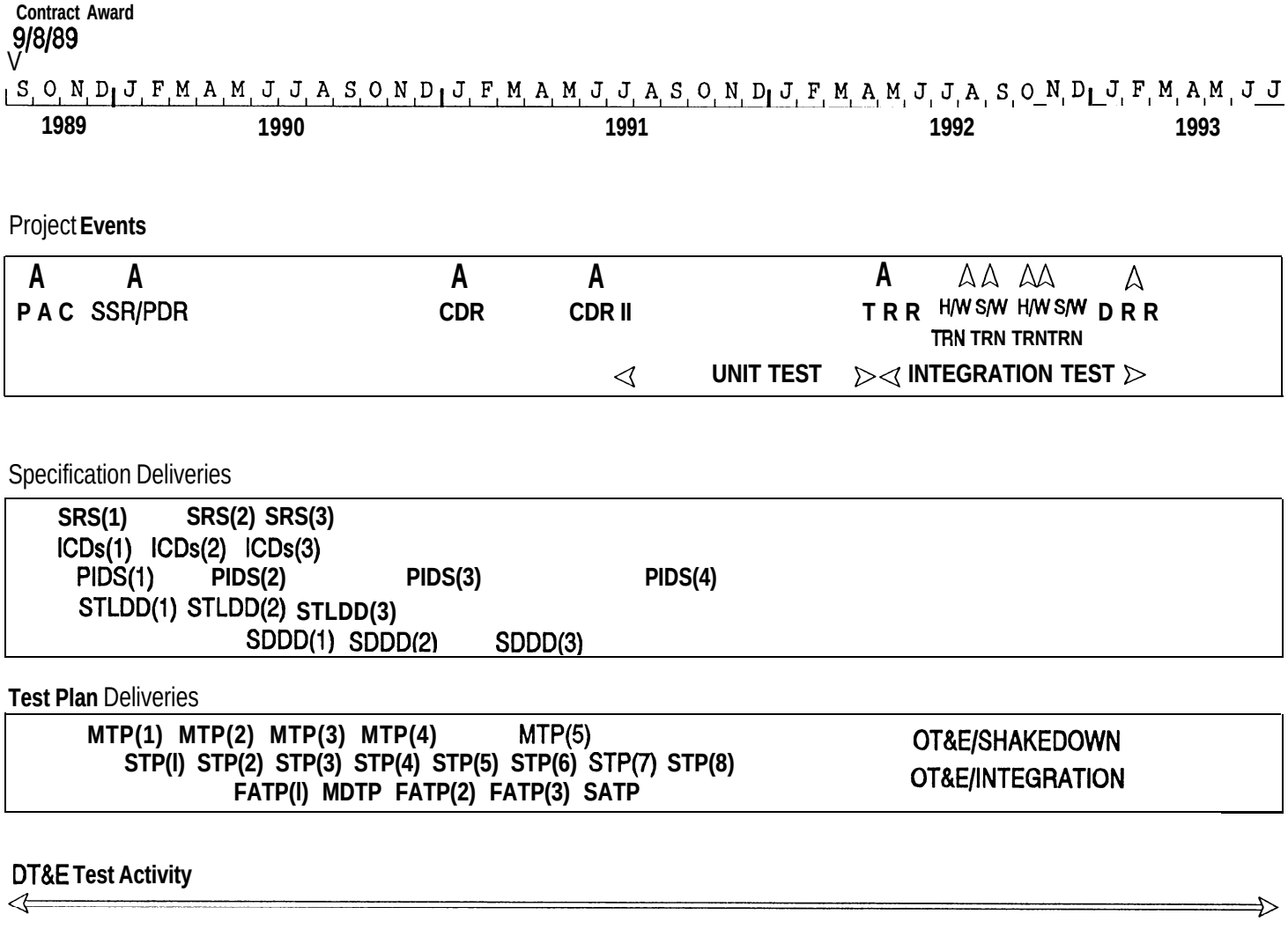

FIGURE 4-2a. ADAS PROGRAM SCHEDULE.
PRODUCTION & DEPLOYMENT PHASE.

TEST AND EVALUATION (T & E) SCHEDULE, FAA TECHNICAL CENTER.

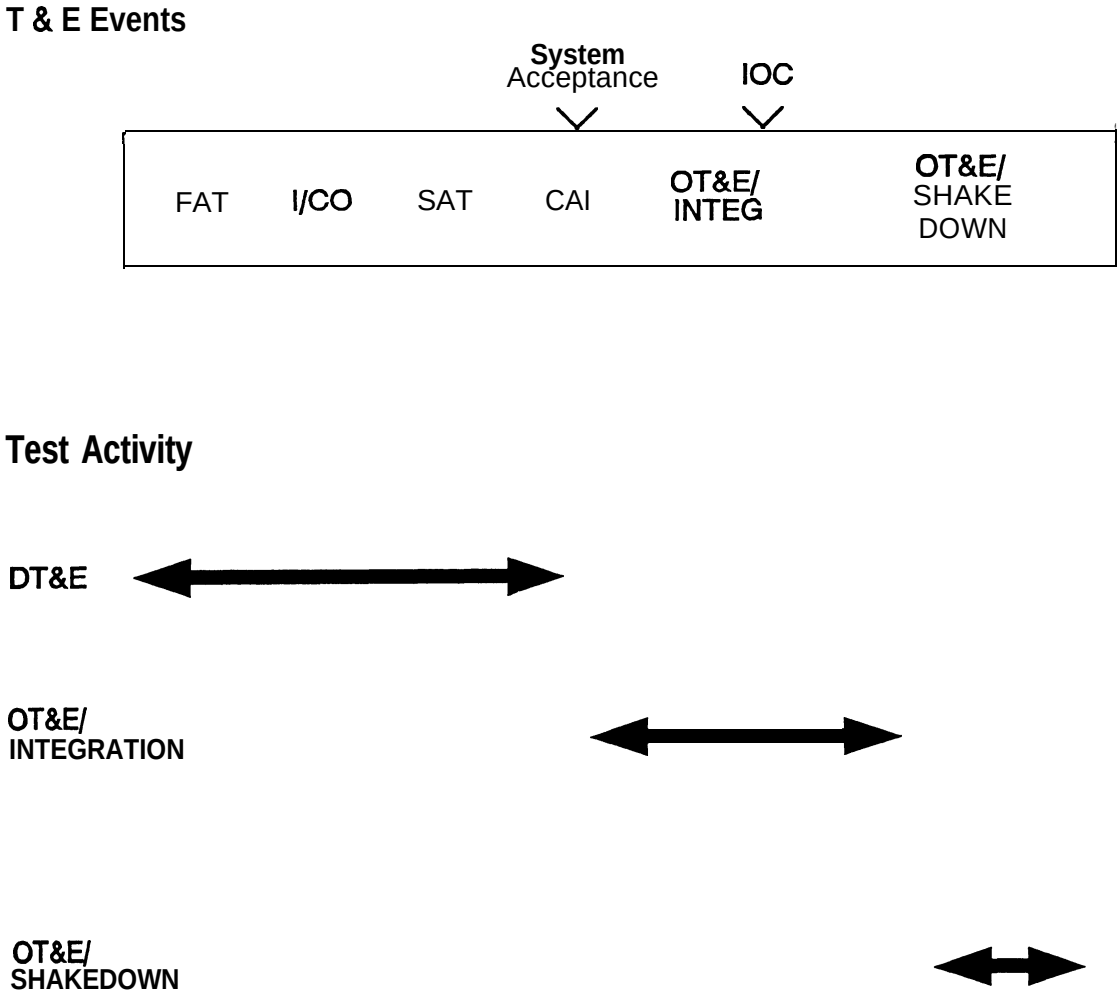

FIGURE 4-2b. ADAS PROGRAM SCHEDULE.
PRODUCTION & DEPLOYMENT PHASE.

TEST AND EVALUATION (T & E) SCHEDULE, FAA ACADEMY.

T & E Events

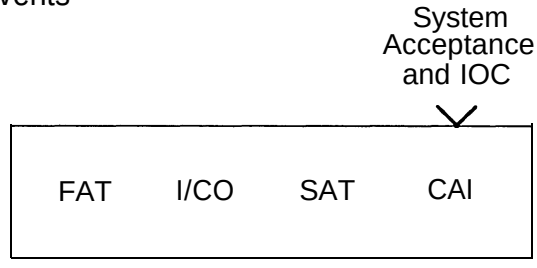

Test Activity

PAT&E

FIGURE 4-2c. ADAS PROGRAM SCHEDULE.
PRODUCTION & DEPLOYMENT PHASE.

TEST AND EVALUATION (T & E) SCHEDULE, FAA FIELD SITE.

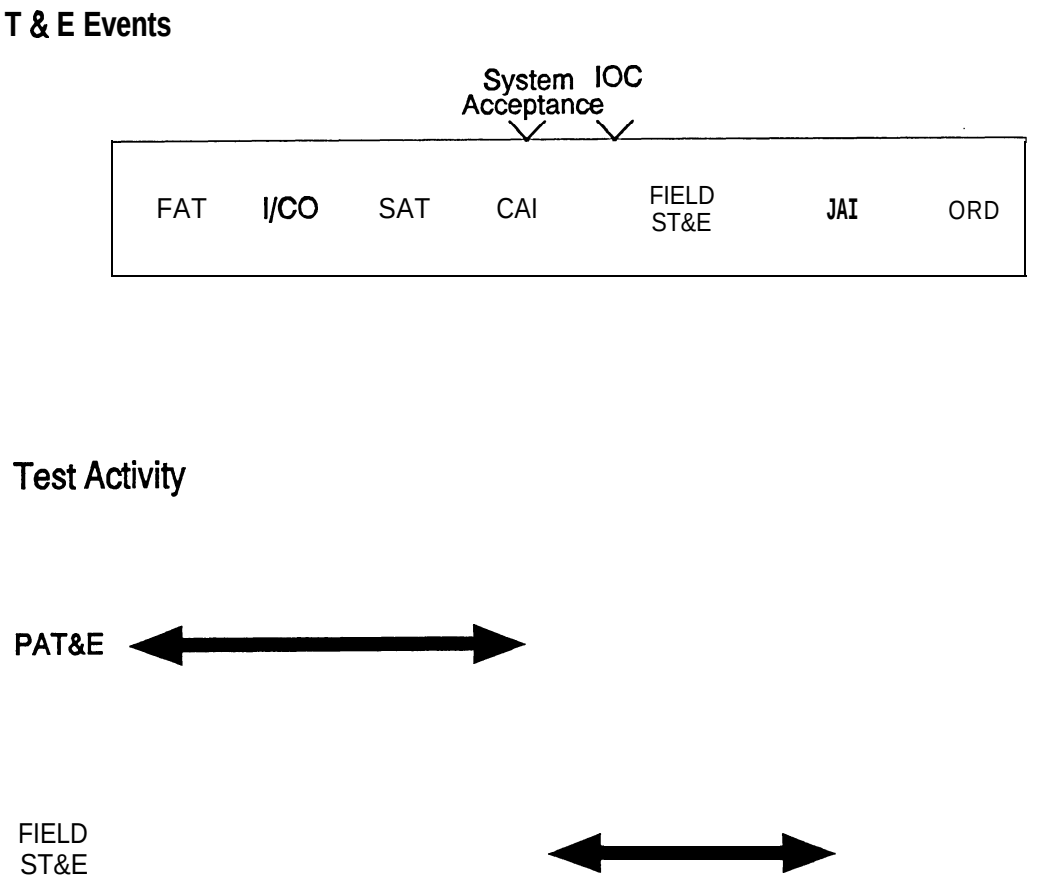

FIGURE 4-3. ADAS PROGRAM SCHEDULE.

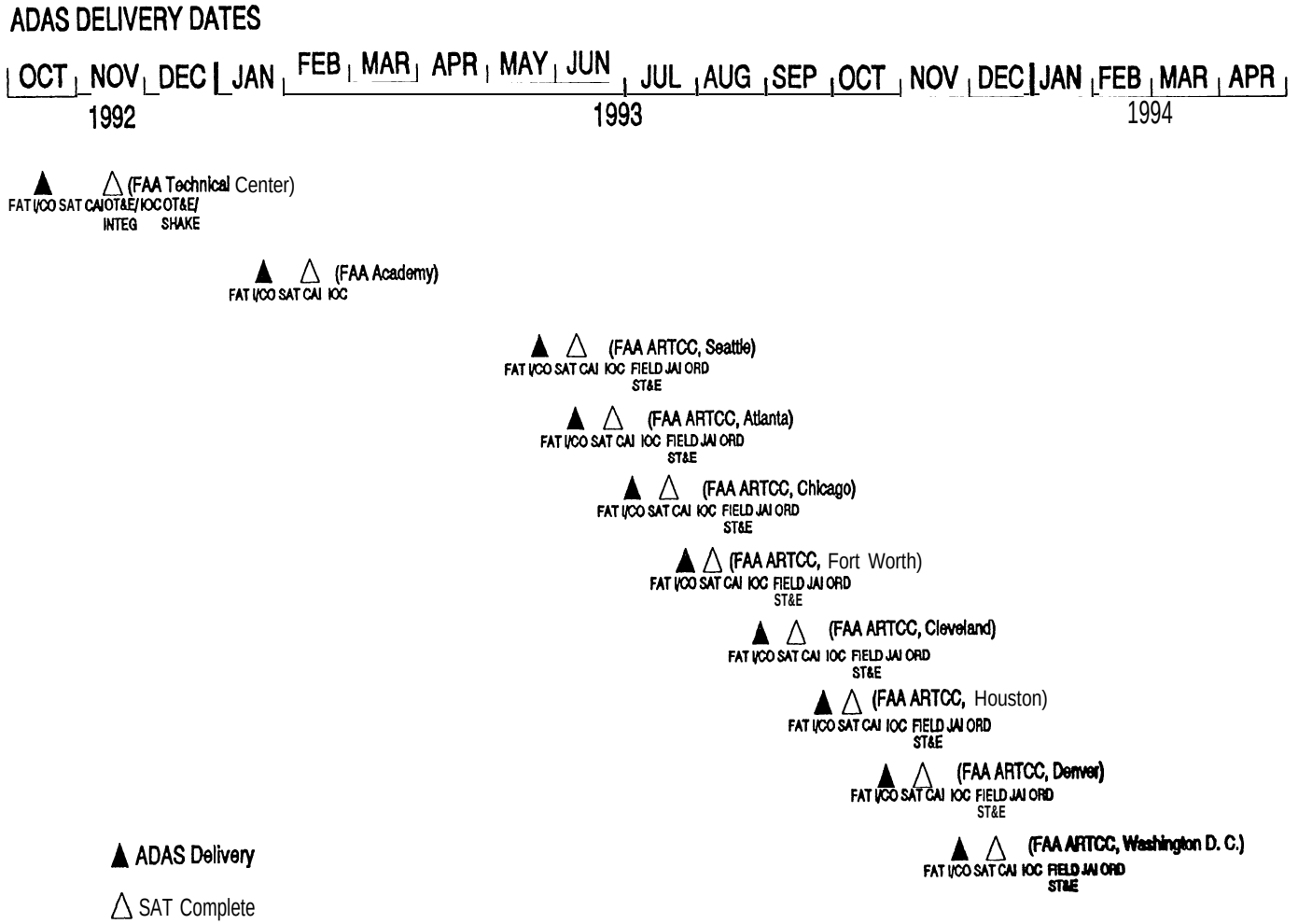

FIGURE 4-3. ADAS PROGRAM SCHEDULE. (cont.)

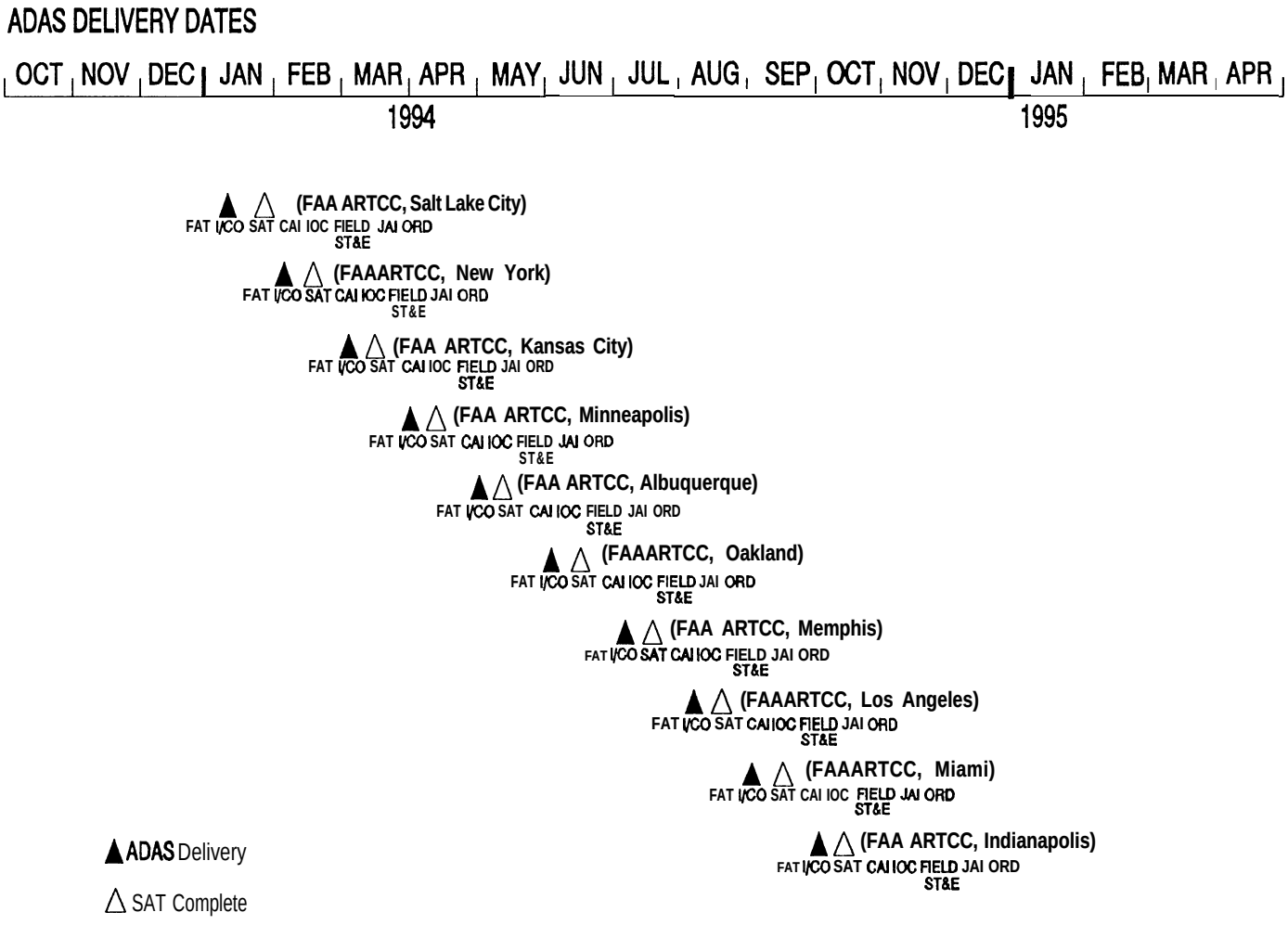

FIGURE 4-3. ADAS PROGRAM SCHEDULE. (cont.)

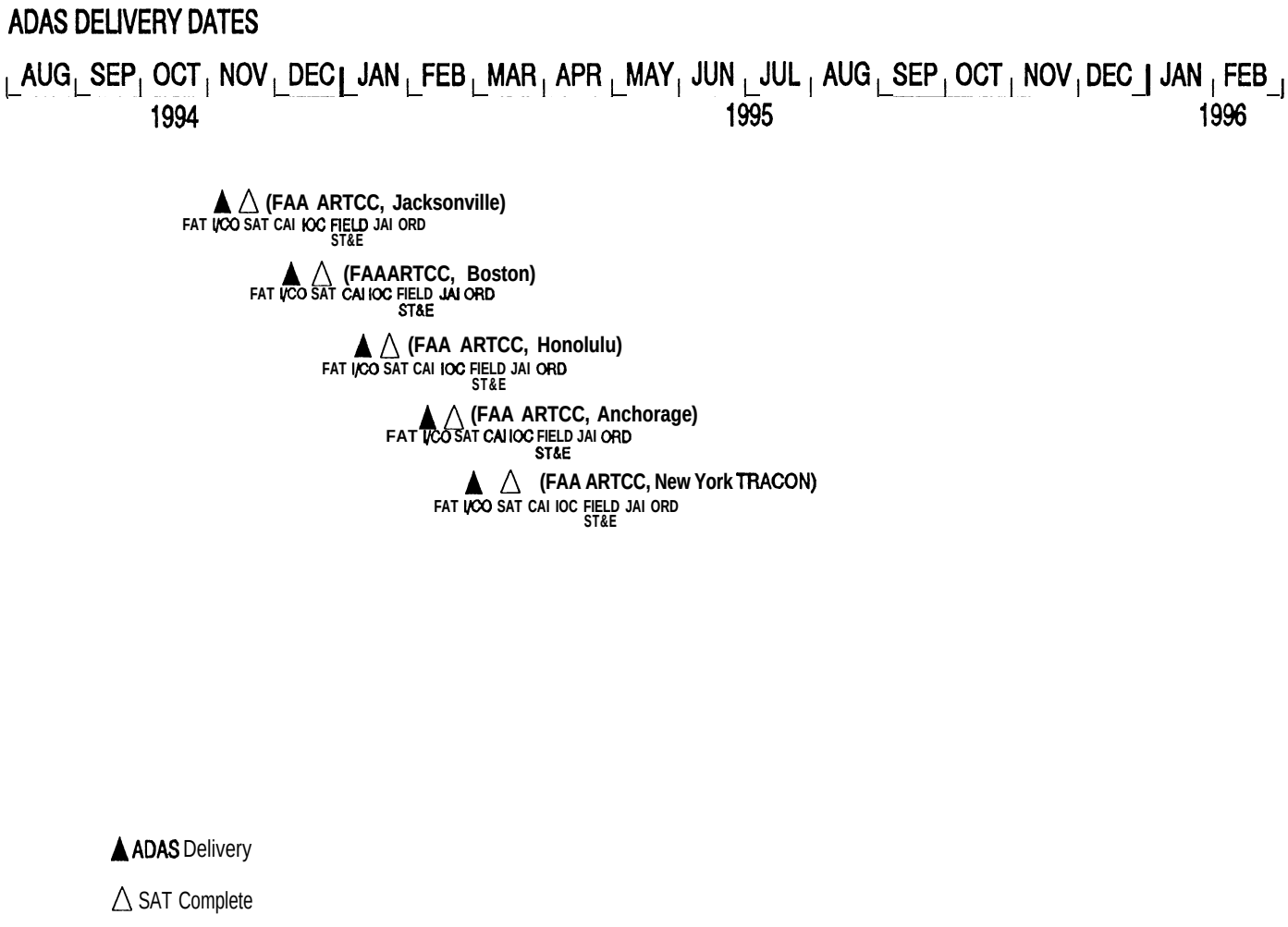

FIGURE 4-4. ADAS PROGRAM SCHEDULE.
FIGURE LEGEND and ACRONYMS.

Figure 4-1. Development Phase.

CDR	- Critical Design Review	DRR	- Deployment Readiness Review
DT&E	- Development Test and Evaluation	PAC	- Post Award Conference
PDR	- Preliminary Design Review	SSR	- Software Specification Review
TRR	- Test Readiness Review		
FATP	- Factory Acceptance Test Plan	ICD	- Interface Control Document
MDTP	- Maintainability Demonstration Test Plan	MTP	- Master Test Plan
PIDS	- Prime Item Development Specification	SATP	- Site Acceptance Test Plan
SDDD	- Software Detailed Design Document	STLDD	- Software Top Level Design Document
STP	- Software Test Plan		

OT&E/INTEGRATION - Operational Test and Evaluation Integration
OT&E/SHAKEDOWN - Operational Test and Evaluation Shakedown

Figure 4-2. Production and Deployment Phase.

CAI	- Contract Acceptance Inspection	FAT	- Factory Acceptance Test
FIELD ST&E	- Field Shakedown Test and Evaluation	I/CO	- Installation/Checkout
		IOC	- Initial Operational Capability
JAI	- Joint Acceptance Inspection	ORD	- Operational ReadinessDeployment
PAT&E	- Production Acceptance Test and Evaluation	SAT	- Site Acceptance Test

CHAPTER 5. PROJECT MANAGEMENT

50. PROJECT MANAGEMENT, GENERAL. The overall program management of ADAS is under the auspices of the Weather and Flight Service Systems, Weather Sensors Program Manager, ANW-400. Matrix management resources and contractor support will be delegated specific areas of responsibilities such as site preparation, installation, and maintenance. The program manager, therefore, will need to utilize personnel from other FAA organizations and contractors to complete the ADAS program. ANW-400 will be supported by the Weather Sensors Branch (ANW-140); the Engineering, Test, and Evaluation Service, ADAS Test Director (ACN-250) and Technical Facilities Division (ACN-300); the Office of Higher Education and Training, Airway Facilities Training Program Division (AHT-400); the Office of Acquisition Support, Systems Operations Branch (ASU-330), Industrial Division (ASU-400), and Quality Assurance Branch (ASU-420); the NAS Transition and Implementation Service, Nails Program Division (ANS-400); the Systems Maintenance Service, Maintenance Operations Division (ASM-200), Telecommunications Planning Division (ASM-300), and National Automation Engineering Field Support Division (ASM-400); the Air Traffic Plans and Requirements Service, Flight Services and Weather Branch (ATR-130); the FAA Academy (AA-940); the regions; and the ADAS program contractor. Key individuals are as follows:

a. Program Manager. The Weather Sensors Program Manager (ANW-400) is designated as the ADAS Program Manager.

b. Associate Program Manager for Engineering (APME). The APME has designated a member of the ANW-140 staff as headquarters project manager for ADAS. The project manager is responsible for all technical aspects of design, production, testing, delivery, and management of the turnkey installation and maintenance of the ADAS.

c. Maintenance Officer. ANS-400 will designate an individual to be responsible for the oversight and funding of system maintenance.

d. Technical Onsite Representative (TOR). A TOR will be appointed by each region (Airway Facilities division manager) to coordinate with the Associate Program Manager for the Region (APMR) and the ADAS contractor on all aspects of installation and testing, through commissioning. The TOR will accept the ADAS from the contractor for the FAA after completion of Contractor Acceptance Inspection (CAI).

e. Associate Program Manager for the Region (APMR). An APMR will be appointed by each region (Airway Facilities division manager). The APMR is responsible for coordinating all ADAS project activities in the region and is the focal point for communications between FAA headquarters, contractors, and site personnel, including the TOR.

f. Contracting Officer (CO). A CO is designated by ASU-330 to perform all contract administration and management activities.

g. Quality Reliability Officer (QRO). A QRO is designated by ASU-400 with delegated authority by ASU-330 to verify the contractor's inspection system, witness tests, and inspect and accept or reject contractor supplies. The QRO will be provided a workplace at the ADAS contractor's manufacturing facility.

h. Integrated Logistical Support (ILS) Management Team Chairperson. A joint Government/contractor National Airspace Integrated Logistic Support (NAILS) Management Team (NAILSMT) will be establish& to monitor the status of thecontractor's ILS program. The ADAS Program Manager will serve as the NAILSMT co-chairperson to coordinate and monitor schedules and contract performance in order to ensureadequacy, timeliness, and compliance with establishedregulatory guidance and contractual requirements.

i. Program Support Facility (PSF). ASM-400 is designated as the responsible organization for the ADAS Program Support Facility at the FAA Technical Center. ACN-300 will accept and maintain the AD.. hardware to be installed at the PSF, and appoint a facility TOR. ASM-400 will be responsible for the maintenance of the ADAS software from this facility.

j. ADAS Training COTR. A training COTR is designated by AAC-940 to monitor the contractor% hardware/software training program, including all training plans, equipment, and materials, and to be responsible for final approval and acceptance of all contract training deliverables. The COTR will accept the FAA Academy ADAS for the FAA after CAI.

k. ADAS Training Analyst. A training analyst is designated by the Airway Facilities Training Program Division (AHT-400) to analyze ADAS training requirements and the contractor's hardware/software training program.

51. - CONTACTS.

a. FAA Headquarters and National Offices.

Individual	Program Area	Address
Steven M. Hodges ANW-400 FTS: 267-7849	ADAS Program Manager	FAA Headquarters ATTN: S. Hodges, ANW-400 800 Independence Avenue S.W. Washington, DC 20591
S. Manley ASU-330 FTS: 267-7539	Contract Officer	FAA Headquarters ATTN: S. Manley, ASU-330 800 Independence Avenue S.W. Washington, DC 20591
Tammara Morrow ASU-330 FTS: 267-3613	Contract Specialist	FAA Headquarters ATTN: T. Morrow, ASU-330 800 Indepmdence Avenue S.W. Washington, DC 20591
W. Bentley and L. Humphrey ASU-426 (213) 820-4616 x584	Quality Reliability Officers	Federal Aviation Administration TELEDYNE Control 12333 West Olympic Blvd West Los Angeles, CA 90064
J. Hill ANW-140 FTS: 267-7515	ADAS Project Manager	FAA Headquarters ATTN: J. Hill, ANW-140 800 Independence Ave S.W. Washington, DC 20591
Cecil Croy AAC-942D (405) 680-4924	FAA Academy Coordinator (Training) and Training COTR	FAA Academy, AAC-942D ATTN: C. Croy P. O. Box 25082 Oklahoma City, OK 73125
Art Holmes Am-321	ADAS TOR for the FAA Technical Center	FAA Technical Center ATTN: A. Holmes, ACN-321 Atlantic City Airport Atlantic City, NJ 08405
Mike Greco Am-250 FTS: 482-6817	ADAS Test Director	FAA Technical Center ATTN: M. Greco, ACN-250 Atlantic City Airport Atlantic City, NJ 08405

Individual	Program Area	Address
J. Barab ACN-250 FTS: 482-5178	Test Director's Office	FAA Technical Center ATTN: J. Barab, ACN-250 Atlantic City Airport Atlantic City, NJ 08405
D. Shawver AS-420 FTS: 482-6048	Software Maintenance, UT&E/Shakedown	FAA Technical Center ATTN: D. Shawver, ASM-420 Atlantic City Airport Atlantic City, NJ 08405
s. Grudaugh AAC-485B FTS: 747-5650	Logistic Provisioning	Federal Aviation Administration Mike Monroney Aeronautical Center P.O. Box 25082 Oklahoma City, OK 73125
Patrick Diehm AAC-445C FTS: 747-3951	Logistic Engineering	Federal Aviation Administration Mike Monroney Aeronautical Center P.O. Box 25082 Oklahoma City, OK 73125
Richard Young Am-130 (202) 267-9173	Air Traffic Plans and Requirements	FAA Headquarters ATTN: R. Young, ATR-130 800 Independence Avenue S.W. Washington, DC 20024
CommPower Borge Riis-Vestergaard President (805) 389-7414	ADAS Contractor	Communications &Power Engineering, Inc. 1320 Flynn Road, Suite A Camarillo, CA 93012-8016

b. Associate Program Managers for the Region (APMR).

Region	Individual	Address
Alaska	(vacant) AAL-421 (907) 271-5199	Federal Aviation Administration 222 West 7th Avenue, #14 Anchorage, AK 99513
Central	Lee Riffel ACE-425A FTS: 867-5676	Federal Aviation Administration 601 East 12th Street Federal Building Kansas City, MO 64106
Eastern	Goc K. Lee AEA-421 (718) 917-1176 FTS: 667-1176	Fitzgerald Federal Building Roam 353 JFK International Airport Jamaica, NY 11430
Great Lakes	Gary St. John AGLr421.1 FTS: 384-7422	Federal Aviation Administration Great Lakes Regional Office 2300 E. Devon Des Plains, IL 60018
New England	Edward F. Davis ANE-422D FTS: 836-7351	Federal Aviation Administration 12 New England Executive Park Burlington, MA 01803
Northwest Mt.	Bob Rollins ANM-422E1 FTS: 446-2425	Northwest Mountain Region 17900 Pacific Highway South C-68966 Seattle, WA 98168
southern	Richard J. Williams ASO-422 FTS: 246-7371	Federal Aviation Administration P. 0. Box 20636 Atlanta, GA 30320
southwest	Russell w. Lenz ASW-421.2 FTS: 734-5426/5370	Federal Aviation Administration Southwest Regional Headquarters 4400 Blue Mound Road Fort Worth, TX 76193-0421
Western Pac.	Lee A. Richards AWP-422.41 FTS: 984-1494 (213) 297-1494	Federal Aviation Administration 15000 Aviation Blvd Lawndale, CA 90261

c. Regional Technical Onsite Representatives (TOR).

Region	Individual	Address
Alaska	John Cline FAA/AAL-421 FTS: (907) 271-5199	Federal Aviation Administration 222 West 7th Avenue, #14 Anchorage, AK 99513
Central	Larry Smith ZKCAF-13 (913) 791-8612	Federal Aviation Administration 201 S. Clairborneeet Olathe, KS, 66062
Eastern	Robert Roessler ZNY (516) 737-3510 FTS: 663-3510	AFS - New York ARTCC MacArthur Airport 4205 Johnson Avenue Ronkonkoma, NY 11779
	Joseph Timko ZDC (703) 771-3643 FTS: 925-4643	AFS - Washington ARTCC 825 East Market Street Leesburg, VA 22075
	Carl Malvicini ZLI FTS: 664-2888	AFSFO - 841.1 NY TRACON 1515 Stewart Avenue Westbury, NY 11590
Great Lakes	James Janke AGL-451A FTS: 384-7661	Federal Aviation Administration Great Lakes Regional Office 2300 E. Devon Des Plaines, IL 60018
New England	John Hadley ANE-433 FTS: 836-7320	Federal Aviation Administration 12 New England Executive Park Burlington, MA 01803
Northwest Mt.	Jim Jewett FTS: 323-4443 ATTN: ACF Coordinator	Denver ARTCC AFS 2211 17th Avenue Longmont, CO 80501
	Arthur B. Denman Salt Lake City (ARTCC) AFS FTS: 586-3152	Salt Lake City ARTCC AFS 2150 West 700 North Salt Lake City, UT 84116
	Gary Weiler Seattle (ARTCC) AFS FTS: 390-5347	Seattle ARTCC AFS 3101 Auburn Way South Auburn, WA 98002

Region	Individual	Address
Southern	Fred Torrible ZJX FTS: 965-1662	Jacksonville ARTCC ZJX P. 0. Box 98 Hilliard, FL 32046
	Debbie Johnson ZMA-860A FTS: 820-1377	Miami ARTCC ZMA 7500 N.W. 58th Street Miami, FL 33166
	David Howell ZME FTS: 222-3181, x 267	Memphis ARTCC ZME 3229 Democrat Rd. Memphis, TN 38118
	Richard Farrell ZTL FTS: 249-7971	Atlanta ARTCC ZTL 299 Woolsey Rd. Hampton, GA 30228
Southwest	Ramon Mondragon ZAB-AFS RDPS FTS: 476-0450	Federal Aviation Administration Albuquerque ARTCC AFS 8000 Louisiana Blvd. N.E. Albuquerque, NM 87109
	Joseph Hubenak ZFW-433.4 FTS: 334-1354/1350	Federal Aviation Administration Fort Worth ARTCC AFS 13800 FAA Road Euless, TX 76040
	Lonnie Angst ZHU/RDP FTS: 527-5450	Federal Aviation Administration Houston ARTCC AFS 16600 JFK Blvd Houston, TX 77032
Western Pac.	Lewis Hawkins ZOA FTS: 449-6382	AFS 5125 Central Ave. Fremont, CA 94536
	Matt Nally John Goring ZLA/AFS (805) 265-8467	AFS 2555 E. Avenue P Palmdale, CA 93550
	Kevin Inouye ZHN (808) 732-8204	HIP AFS Diamond Head Crater 4204 Diamond Head Road Diamond Head, CA 96816

52. PROJECT COORDINATION. ANW-400 has the overall responsibility for the procurement and installation of the ADAS. ANW-400 appoints the ADAS project manager, who shall be the point of contact for all project related activities. A copy of all correspondence concerning ADAS related activities shall be sent to the ADAS project manager. The contracting officer is the only person authorized to direct contract deliverables, schedules, or price. Technical direction to the contractor within the scope of the contract will be provided by the project manager. The contact points for regional support activities will be the appointed regional APMR's.

53. PROJECT RESPONSIBILITIES MATRIX. Figure 5-1 summarizes the various functions of the ADAS program and identifies the primary responsibilities.

54. PROJECT MANAGERIAL COMMUNICATIONS. To maintain effective and responsive control of overall progress, frequent reviews, conferences, and working sessions will be held between FAA management, the program manager, and APMR's. Participation in these conferences of various other FAA offices is at the discretion of the program manager. Contractor participation will be as requested. Routine status reporting will be required.

a. Quarterly Program Reviews. The program manager or designee (project manager) will conduct quarterly reviews of the project status and progress. These reviews will normally include representatives from headquarters organizations andthecontractorasrquested. Special status reviews and technical interchange meetings may be scheduled at the contractor's or region's facilities as required. Minutes of the program reviews will be distributed to all attendees,

b. Project Status Meetings. The contractor will conduct quarterly program status review meetings with the CO, project manager, cognizant engineers, and their contractor equivalents. The meetings will be held at the contractor's facility and chaired by the FAA. These meetings will review schedule and performance, identify problem areas between the contractor and FAA, and generate action items for problem resolution.

c. Test Schedule and Status Review (TSSR) Meetings. The ADAS test director will conduct TSSR meetings for the purpose of reviewing the test schedule and test status, and to identify and resolve problems related to testing. The meetings will be held at the FAA Technical Center.

d. NAILSMT Meetings. These meetings will be held quarterly through the first year after contract award, and semiannually thereafter. Members will review the contractor's Logistic Support Analysis Records (LSAR) data.

FIGURE 5-1. ADAS RESPONSIBILITIES SUMMARY.

Function/Event	Primary
Overall Program Management	ANW-400
Contract Administration	ASU-330
Quality Assurance	ASU-400
Project Management	ANW-140
ADAS Regional Project Management	APMR
Selection of ARAS Contractor	ANW-400/ASU-330/ANW-140
Selection of ADAS Sites	ATR/APMR/Regions
Site Preparation Work	Regions
Site Survey and Walkthrough	ANW-140/APMR/TOR/ Contractor
Installation of ADAS on Prepared Site	Contractor/ANW-140
Contractor Acceptance Inspection (CAI)	TOR/Regions/ Contractor/ANW-140
shakedown	TOR/ASM-400/Regions
NAS Integration Verification	ACN-250
Joint Acceptance Inspection (JAI)	AF Sector Manager
JAI Approval/Commissioning	AF Sector Manager
Contract Maintenance (1st year)	Contractor/ANW-140
configuration Management	Contractor/ASM-400/ ASE-600/ANW-140
Maintenance Support Requirements Definition	ASM-200/ASM-100
Software Maintenance Oversight	ASM-400
Hardware/Software Maintenance Training	AAC-940

e. Training Review Meetings. These meetings will be held as required to review contractor training performance and contractor submissions (e. g., contract training plan, training materials). Meetings will be divided between the contractor's facility, Oklahoma City, OK, and Washington, DC, and will la&approximately 2 days each. FAA representatives or designees will attend.

f. Regional Status Reporting. Regional status reports regarding technical progress and cost performance will be submitted to the ADAS program manager by each APMR as requested by the program office.

55. IMPLEMENTATION . . . . .

a. Technical Onsite Representatives (TOR). TOR's are appointed by each region (Airway Facilities division manager) to coordinate with the regional APMR and the ADAS contractor on all aspects of installation and testing, through commissioning. Tasks include, but are not limited to:

(1) Coordinating/managing site preparation planning and construction activities.

(2) Providing regional coordination, direction, and guidance to the contractor for efficient and timely accomplishment of installation, testing, evaluation, and acceptance. This position is the interface between the contractor and the FAA CO.

(3) Arranging contractor site access for site surveys, walkthroughs, installation and checkout, and site acceptance testing.

(4) Supervising and monitoring site surveys. Participating in site surveys and joint walkthroughs.

(5) Providing input and periodic technical reports describing the deployment progress at each site to the regional APMR for presentation to the program -cl=-

(6) Coordinating Site Acceptance Tests (SAT) in accordance with the requirements of the approved contractor's plans for ADAS.

(7) Overseeing and monitoring the CAI.

(8) Conducting the JAI, if designated for this task as the representative of the Airway Facility sector manager.

(9) Taking action formally to commission each ADAS facility.

b. Associate Program Managers for the Region (APMR). As the program manager's regional representatives, APMR's work closely with the program manager, the ADAS contractor, and the regional TOR's. APMR's are designated

by the division manager and are accountable for ensuring that ADAS is implemented in an orderly manner. The APMR's are responsible for communication, coordination, and support to the program manager. Tasks include, but are not limited to:

(1) Coordinating/managing regional deployment activities.

(2) Forwarding to the program manager TOR-provided input and periodic technical reports describingthedeploymentprogress at each site.

(3) Coordinating the scheduling and conducting of the sitesurveys and joint walkthroughs with the TOR and the contractor.

c. Airway Facilities Sector Manager. The Airway Facilities sector manager will assign one or more maintenance representatives to work with the TOR through JAI. The maintenance representatives will witness and participate in the cmstruction, installation, testing, and wllection of data, so as to avoid the necessity of repeating these items at a later date. The Airway Facilities sector manager will designate the chairman of the JAI board, conduct or delegate the conduct of the JAI, and approve the JAI. The JAI will be conducted in accordance with Order 6030.45, Facility Reference Data File.

56. PLANNING AND REPORTS. The following plans and reports are referenced or required by this PIP.

a. Contract Plans and Reports. The AD.. wntractorwillsuhnitthe plans and reports required by the CDRL.

b FAA Plans and Reports. The ADAS program office or its support groups and c&tractors will submit the following plans and reports.

(1) ADAS Project Master Test Plan. This document will be furnished by the program office and the test director.

(2) OT&E/Integration Test Plan and Procedure. These documents will be developed by ACN-250.

(3) OT&E/Shakedown Test Plan and Procedure. These documents will be developed by ASM-400. The OT&E/Shakedown Test Procedure documentwill be furnished by ASM-400 to the regional APMR's.

(4) Field Shakedown Test and Evaluation (ST&E) Test Plan and Procedure. These docments, for each site, will be developed by the responsible region. The procedure document may be developed from the OT&E/Shakedown Test Procedure furnished by ASM-400.

(5) JAI Report. This documentwill be prepared by the JAI board.

57. APPLICABLE DOCUMENTS. A list of applicable documentsis contained in appendix 2.

58. SPECIFIC RESPONSIBILITIES. Implementation of the ADAS program requires active support, cooperation, and coordination of many FAA offices, services, centers, and regions. The following paragraphs describe the specific functional responsibilities of these various organizations.

a. FAA HeadquartersResponsibilities.

(1) Program Office (ANW-400)/Project Office (ANW-140).

(a) Provide program guidance to all offices, services, centers andregionsto ensure that the program meets the definedrequirements, on schedule, and within the allocated budget.

(b) Review and approve/disapprove submitted test reports in accordance with the ADAS System Specification (FAA-E-2804).

(c) Prepare and coordinate the technical requirements for the procurements.

(d) Provide planning and guidance information to all activities that have an interfacing role with ADAS to enable timely and properly coordinated implementation of support activity.

(e) Secure, through coordination with the Office of Budget, all funds necessary to integrate ADAS into the NAS.

(f) Perform technical monitoring of the contractor as to production, testing, installation, integration, documentation, and maintenance of hardware and software for the ADAS.

(g) Coordinate with the regions in scheduling and monitoring site preparation and installation.

(h) Issue Project Authorizations (PA) to regions to fund their support effort.

(i) Ensure that logistic support requirements are planned, funded, and delivered.

(j) Coordinate the resolution of all issues emanating from the JAI.

(k) Establish a DRR team to support the DRR process for the ADAS.

(1) Ensure that initial training requirements are planned, funded, and delivered.

(2) Flight Services and Weather Branch (ATR-130).

(a) Identify and document, as necessary, any additional aperational requirements for ADAS.

(b) Ensure that all operational aspects of system implementation are satisfactorily resolved by the regions.

(3) Systems Operations Branch (ASU-330).

(a) Administer the ADAS contract.

(b) Prepare, negotiate, and administer contract modifications asrequired.

(4) Maintenance Operations Division (ASM-200).

(a) Review and approve contract requirements for maintenance items.

(b) Fundandadminister contract maintenance and logistics support.

(5) Telecommunications Planning Division (ASM-300).

(a) Provide telecommunications requirements, planning, and engineering for the ADAS external interfaces.

(b) Fund and administer operational and maintenance (ONM) funds to support requirements provided by the ADAS program manager.

b. Regional Responsibilities. Each regional division manager will designate a TOR, an APMR, and one or more Airway Facilities sector manager representatives. Specific responsibilities of these positions are delineated in chapter 7. The following general services will be provided by each region.

(1) Coordinate the ADAS Program within the region.

(2) Support and monitor the ADAS contractor inthewnductof each site survey.

(3) Prepare each ADAS site within the region for installation.

(4) Monitor and approve ADAS contractor installation and checkout efforts for the ADAS field implementation.

(5) conduct CAI and accept the ADAS for the Government.

(6) Prepare ST&E test plans and procedures for each ADAS site.

(7) conduct ADAS ST&E at each site.

(8) Conduct an&evaluate JAI.

(9) Determine ORD.

(10) Cmnission formally each operational ADAS.

c. ADAS Contractor% Responsibilities. Inaccordancewiththewntract, the ADAS contractor is responsible for providing turnkey ADAS, to include design, development, integration, testing, production, installation, verification, post-acceptance maintenance, required documentation, test equipment, and hardware/software maintenance training.

d. FAA Technical Center Responsibilities.

(1) National Automation Engineering Field Support Division (ASM-400). ASM-400 is responsible for supporting the ADAS program office to ensuresuccessful implementation of the ADAS engineering support program. ASM-400 will prepare ADAS OT&E/shakedown and field ST&E plans and procedures in accordance with FAA-STD-024a, Preparation of Test and Evaluation Documentation. ASM-400 will conduct OT&E/shakedown testing at the FAA Technical Center installation, and if necessary at the first operational field site. If necessary, ASM-400 will support the regions in conducting field ST&E at the operational field sites. Following FAA acceptance of the FAA Technical Center ADAS, the contractor will perform ADAS software maintenance at that facility under the direction of ASM-400 for a wntract period of 3 years.

(2) ADAS Test Director (ACN-250). The ADAS test director's office is responsible for executing OT&E/integration testing. This also includes preparation of OT&E/integration test plans and procedures for the ADAS in accordance with FAA-STD-024a, conduct of OT&E/integration testing at the FAA Technical Center on the first installed ADAS system, analysis of test data, and preparation of the OT&E/integration test report.

e. Mike Monroney Aeronautical Center Responsibilities.

(1) FAA Academy @AC-940) will provide ADAS FAA field personnel training following initial ADAS contractor-provided training. AAC-940 will support ANW-140 in evaluating the training courses during development by the ADAS wntractor, evaluate the contractor's course material and provide comments to satisfy FAA Academy training standards, receive and maintain all final training materials, and provide ADAS maintenance and system operation training to FAA facilities personnel.

f. Other FAA Support Organization Responsibilities.

(1) Quality Assurance Branch (ASU-420). ASU-420 (QRO) is responsible for reviewing and approving the ADAS contractor's quality assurance program in accordance with FAA-STD-018, Computer Software Quality Program Requirements, and the contractor's Computer Software Quality Program Plan (CSQPP). The QRO will be in-plant (at the ADAS contractor's site), and will perform QA activities as specified in the Inspection Clause (Section E) ofthewntract.

59. RESERVED.

CHAPTER 6. PROJECT FUNDING

60. PROJECT FUNDING STATUS, GENERAL.

a. Financial management. The financial management of the ADAS project will be exercised by the Weather Sensors program office. Realistic and traceable wst estimates for each major element of the ADAS Project will be developed and included in the FAA budget. Financial status, rate of expenditure, and potential wst growth will be obtained from the contractor and regions. Where necessary, the program office will obtain an independent assessment of contractor cost estimates by other offices. A system will be established to track program expenditures continuously.

b. Scope. FAA offices, services, and regions shall use the budgeting process to obtain funding for staffing, training, equipment, and associated development.

c. Project Authorizations (PA). The PA's for regional support were issued as of April 1990. These PA's will be approximately $10,000 per site for site preparation, sitesurveyandwalkthrough, JAI/CAI, and other activities described in paragraph 55. Afterregionshavedeteminedthe site preparation requirements a firm dollar figure will be determined per specific site.

61. REGIONAL CONTRACT AUTHORITY. The entire planned implementationof ADAS has been budgeted and identified as part of the contractual agreement between the ADAS contractor and the ADAS program office. Itisrewgnizedthatin accommodating ADAS, construction projects may encounter difficulties related to site variations. This could cause additional expenses for the installation contractors. To preclude delays in contractual efforts from exceeding the resources of the ADAS budget, the regional APMR will be granted approval for $10,000 per site.

62.-69. RESEEWED.

CHAPTER 7. DEPLOYMENT

70. GENERAL DEPLOYMENT ASPECTS.

a. ADAS Deployment Considerations. ADAS shall be a turnkey installation whereby the FAA is responsible for site preparation and the ADAS contractor is responsible for providing the system hardware and software and accomplishing the system installation and checkout at all locations. The regions shall prepare the sites at all ARTCC's, and the facilities (FAA Technical Center and FAA Academy) shall preparetheirrespectivesites. The contractor is responsible for the conduct of the site acceptance testing, the support of CAI, and the resolution of any noted exception items. Any exception items that cannot be resolved between the FAA region and the ADAS contractor will be forwarded to the ADAS Project Manager for resolution. The FAA Technical Center will be the first installation site. FAA UT&E/integration and OT&E/shakedown testing will be conducted at this site. Successful completion of the latter testing at this site will be followed by the FAA decision for general deployment.

b. Deployment Readiness Review (DRR). An FAA ADAS DRR team kickoff meeting was held in February 1990 and was chaired by the ADAS Program Manager. The team consisted of regional facility and FAA headquarters representatives. The purpose of the DRR process is to provide a review of project status and determine readiness of the system for deployment. The program manager will preparereportand summary briefing on the DRR no later than 30 days before first delivery. A briefing to the DRR Board by the program manager may be required if directed by the Associate Administrator for Airway Facilities, AAF-1. The decision for deployment of the ADAS will be made by the DRR executive committee (EXCOM) following the completion of OT&E/shakedown testing on the first delivered system, and the review of deployment recommendations from the Test Policy Planning and Review Board (TPRB). Information on the DRR process, requirements, and checklist are contained in Order 1800.63, National Airspace System (NAS) Deployment Readiness Review (DRR) Program, issued by m-11.

71 SITE PREPARATION. ADAS site preparation is the responsibility of each r&on. A maximum of 6 months will be required to schedule and accomplish the ADAS site preparation. Site preparation includes all construction necessary to prepare the site in accordance with the ACF/ADAS IRD, the contractor's site survey and installation and checkout plan, and the joint site walkthrough. The planned delivery schedule and site listings for site preparations are specifically identified in appendix 3.

a. Contractor's Site Survey. The contractor will review Government-furnishedsitedocumentation (see paragraph 74) to gather requirements for site-specific installation and checkout procedures, to make a preliminary identification of any related problems, and to prepare for individual site surveys. Thewntractorshall furnish a site survey checklist via the ADAS project manager to be completed by the regions. Thewntractorshall wnduct a site survey for each ADAS site (see appendix 3 for site survey schedule). The contractor's installation and checkout plans (see paragraph 73) shall be finalized and delivered to ANW-140 for approval within 30 days of completion of each site survey.

b Site Preparation Plans. The regions shall prepare individual site preparation plans based on the contractor's site surveys and installation and checkout plans. Each site preparation plan will take accountofthe contractor's site preparation requirements, floor plan layouts, and installation procedures. The regions will furnish site preparation plans to the ADAS wntractor and prepare all sites for installation by the wntractor. The program office will approve and fund necessary facility changes as a function of initial site preparation.

c. Joint Walkthrough. The contractor's representative and the Government (TOR) will conduct a joint walkthrough at each site a maximum of 30 days prior to delivery to confirm that the site has been adequately prepared for ADAS installation. Deficiencies noted must be identified and corrected as soon as possible.

72. DELIVERY. The 25 ADAS site locations and their related delivery schedule appears in appendix 3 and figure 4-3. Any changes to the delivery schedule will be coordinated by ANW-140 with the regional APMR.

73. INSTALLATION PLAN. Installation of the ADAS hardware, checkout, and testing are the responsibility of the ADAScontractor. The contractor will prepare a site installation and checkout plan for each site, detailing site preparation requirements, floor plan layouts, and installation procedures. These documents describe all tasks related to the system installation through CAI and acceptance by the Government. Each plan will be delivered to ANW-140 for approval not later than 30 days after the completion of each site survey. These plans will be made available to the regions as soon as possible, but no later than 6 months prior to scheduled delivery.

74. GOVERNMENT-FURNISHED INFORMATION FOR ADAS DEPLOYMENT.

a. M-140 Furnished Information. ANW-140 provides the ADAS site preparation and delivery schedules (see appendix 3).

b. Region Furnished Information. The regions furnished detailed site documentation as of June 1990 to the ADAS contractor. Completed site survey checklists will be furnished by the regions to the contractor prior to the site surveys.

75.-79. RESERVED.

CHAPTER 8. VERIFICATION

80. FACTORY VERIFICATION.

a. Computer Software Verification. The primary instruments of software verification during the system development phase are the unit test (UT), the configuration test (CT), and the systems integration test (SIT), as specified in FAA-E-2804, section 4, and the contract. This testing conducted by the ADAS contractor forms part of ADAS Development Test and Evaluation (DT&E). The ADAS contractor will prepare and deliver software test plans for each Computer Software Configuration Item (CSCI) prior to PDR, and software test descriptions and procedures for each CSCI prior to CDR. Testing of each Unit, Computer Software Component (CSC), and CSCI will be performed by the contractor before designated FAA witnesses, including Indepmdent Verification and Validation (IV&V) personnel, at the contractor's test facility.

b. Factory Acceptance Test (FAT). Each ADAS will undergo FAT at the contractor's test facility before designated FAA witnesses in accordance with the process and requirements defined in ADAS Specification FAA-E-2804. This testing as conducted on the first deliverable system by the ADAS contractor forms part of ADAS DT&E. FAT conducted on the remaining deliverable systems forms part of ADAS Production Acceptance Test and Evaluation (PAT&E). The ADAS contractor will prepare and deliver FAT plans prior to CDR, and FAT procedures prior to TRR.

81. CHECKOUT. The ADAS contractor will prepare and deliver ADAS Site Acceptance Test (SAT) plans and procedures for approval by the FAA prior to TRR, and detailed instructions for installation and checkout at each site according to the schedule shown in appendix 3. SAT as conducted by the ADAS contractor at the first ADAS site (the FAA Technical Center) fonnspartof ADÄS DT&E and verifies that the ADAS system is installed properly and satisfies its functional and performance operational requirements. SAT as conducted at the remaining installation sites forms part of ADAS PAT&E. These tests will be witnessed by FAA representatives (TOR, IV&V, Airway Facilities). A SAT report will be submitted by the contractor to the FAA (ANW-140, ASU-330, ASU-420) within 20 days following completion of each SAT.

82. CONTRACTOR INTEGRATION TESTING. The contractor's SAT plan will define the role for SAT at each site of existing NAS external interfaces to the ADAS, and specify alternative test procedures with respect to those external interfaces which are not functional at the time of SAT. The ADAS contractor is not required to demonstrate ADAS integration with the NAS beyond the scope of the SAT. UT&E/integration testing performed at the NAS system level is specifically an FAA responsibility (see paragraph 84).

83. CONTRACTOR ACCEPTANCE INSPECTION (CAI). The CAI is an inspection conducted by the FAA for acceptance of the installed equipment from the ADAS contractor. The CAI will be conducted at each site after the ADAS has successfully completed SAT. Successful completion of CAI at the first ADAS site (the FAA Technical Center) will mark completion of the development phase of ADAS. Successful completion of CAI should determine the point of initial operating capability (IOC) for each ADAS. Acceptance of ADAS equipment will be performed by the regional or facility TOR or designated representative.

84. FAA INTEGRATION TESTING. Verification of ADAS integration with the NAS will be performed by the FAA. ACN-250, the ADAS test director's office, is responsible for executing OT&E/integration testing. OT&E/integration testing will include system-level requirements in the NAS that cannot be adequately tested by the SAT or other project level testing (DT&E and PAT&E), and is conducted to evaluate ADAS interoperability and compatibility with the NAS and to identify deficiencies in NAS hardware, software, or operational wncepts. The results of OT&E/integration will form a major input into the ADAS deployment decision. ACN-250 will develop OT&E/integration plans and procedures in accordance with FAA-STD-024a. OT&E/integration testing will be conducted by ACN-250 at the FAA Technical Center on the first installed ADAS system. Testing will be monitored by the ADAS project manager.

85. SHAKEDOWN AND CHANGEOVER. Shakedowntestingisperformdatthefirst ADAS installation (OT&E/shakedown) and subsequently following deployment at each operational field site (field ST&E). Shakedown is not performed at the FAA Academy training site.

a. OT&E/Shakedown. The goal of OT&E/shakedown testing is to evaluate the ADAS operational effectiveness and suitability including degraded operations, survivability, maintainability, and training. ASM-400 will develop UT&E/shakedown plans and procedures in accordance with FAA-STD-024a. ASM-400 will conduct OT&E/shakedown at the FAA Technical Center after the completion of UT&E/integration, and if necessary at the first operational installation. The results of OT&E/shakedown will form a major input into the ADAS deployment decision.

b. Field ST&E. Field shakedown testing begins following CAI with the determination of IOC. Field ST&E is conducted to support determination that each installed ADAS is ready for full operation as part of the NAS. Field ST&E plans and procedures for each site will be developed by the regions in accordance with FAA-STD-024a. Regional Airway Facilities divisions and the TOR will wnduct shakedown testing for all operational field sites, with support from ASM-400 as required. The shakedown for the ADAS will include the monitoring of the weather observations being output by the ADAS to verify accuracy and completeness. Sincewntractmaintenanceisplanned, failure detection and recovery procedures should also be tested and evaluated.

86. JOINT ACCEPTANCE INSPECTION (JAI). The JAI will be conducted at the operational field sites (ARTCC's) by the Airway Facilities sector manager or designated representative after the CAI and field shakedown have been satisfactorily completed. The APMR and the program office will jointly develop the requirements for the JAI, Which will be based upon the events and documentation leading up to and including the CAI. Order 6030.45 provides specific guidance for preparation, wnduct, and documentation of the JAI. Documentation requirements shall not exceed those specified in the ADAS wntract without approval of ANW-140. A demonstration of operational performance separate from that performed for the CAI shall not be required. The JAI will be approved by the AF sector manager, who will at that time accept full custody of the ADAS. The JAI board will determine the ORD.

87. CONFIGURATION MANAGEMENT. The ADAS is a commercially procured system whose wnfiguration will be controlled and maintain& during the acquisition, implementation, and operational support phases.

a. Acquisition Phase Configuration Management. During the acquisition phase, the ADAS configuration will be controlled and maintained by the contractor as required by the terms of the contract. The contractor is required to establish, implement, andmaintainawnfigurationmanagement program in acwrdance with FAA-STD-021, Configuration Management, and documented in a Configuration Management Plan. ANW-140 is responsible for monitoring the contractor's configuration management program during the life ofthewntract.

(1) The Contractor Configuration Change Control Board (CCCB) shall establishbaselines and support baseline management. The contractor will submit Engineering Change Proposals (ECP) to the CO for proposed changes to configuration items. Configuration items are to be systematically identified and marked; the contractor shall prepare Configuration Item Development Records for each item. Configuration Status Accounting (CSA) Reports shall be providedtothe FAA. The contractor shall develop a Configuration Audit Plan and conduct configuration audits on all delivered hardware, software, and documentation.

(a) Functional Baseline. The ADAS specification (FAA-E-2804) shall semeasthefunctionalbaseline.

(b) Allocated Baseline. The allocated baseline shall be established on completion of SSR.

(c) Design Baseline. The design baseline shall be established on completion of CDR.

(d) Product Baseline. The product baseline shall be established on completion of the PCA incorporated in the FQR.

(2) The ANW-1 Configuration Control Board (CCB) approves the establishment of, and changes to, the ADAS hardwareandsoftwarebaselines during the acquisition phase. For ADAS matters, the CCB will include members from Air Traffic, Maintenance Operations, Contracts, System Engineering, Configuration Management, and the SEI contractor. The CCB is responsible for ensuring that the functional, performance, andinterfacerequirements allocatedto the ADAS hardware and software subsystems are reflected in the baselinedocumentation, and is responsible for approving any changes to that documentation. The ANW-1 CCB retains this Government configuration management responsibilityuntilthelast ORD.

(3) Upon successful completion of the FQR, ANW-140 will initiate a case file for the ADAS Product Baseline in accordance with Order 1800.8F, National Airspace System Configuration Management, for approval by the division CCB.

b. Transition of Hardware/Software Configuration Management. The configuration management responsibility associated with ADAS software will transition from ANW-140 to ASM-400 after the last ORD and when there are no major system problems. Subsequently, approval authority of all hardware NAS Change Proposal (NCP) activity will transition from the ANW-1 division CCB to the Maintenance Engineering (ME) CCB and all software NCP activity to the Air Traffic CCB. A handoff package for ADAS will be prepared by ANW-140 consisting of all hardware, technical, and provisioning documentation, all software media, and all supporting documentation and site installation documentation.

c. Operational Support Phase Configuration Management. During the operational support phase, and for the entire life-cycle of the implemented ADAS hardware and software, configuration management functions will consist of maintenance and change control management to ensurethe integrityofthe approvedproductbaseline.

88. QUALITY ASSURANCE. The ADAS contractor will develop, implement, and maintain hardware and software quality assurance programs inaccordancewith thecontract. Software quality assurance will be in accordance with FAA-STD-018 and the contractor's CSQPP.

89. INDEPENDENT VERIFICATION AND VALIDATION (IV&V). The FAA will conduct IV&V activities from the design and development phase of ADAS through installation and acceptance of the system. ANW-140 will produce an IV&V Plan conforming as closelyaspossibletothe fomatandcontents of the IV&V Plan identified in DOD-STD-2168, Defense System Software Quality Program, modified to reflect DOD-STD-2167, Defense System Software Development. Included in the plan will be identification of criteria for evaluating the products and processes. ANW-140 has designated the Volpe National Transportation System Center (VNTSC, MS-53) as the IV&V contractor.

a. IV&V Activities for PDR. The applicable documents will be evaluated, discrepancies identified, and test requirements and evaluation reports produced. The documents evaluated shall conform to the requirements specified by the ADAS contract, as modified through contract modifications, and concentrate on design and test. Also assessed are the technical, schedule, and cost risks of the preliminary design.

b. IV&V Activities for CDR. The detailed design will be evaluated & tracked through the System Requirements and System Specification with any discrepancies noted. For each test requirement identified in the above documents, one or more test cases will be documented for application to ADAS. For each test performed on ADAS, the test documentation will be reviewed, test discrepancies identified, and evaluation reports produced. All discrepancies will be tracked for the life of the project.

c. IV&V Activities to the Completion of TRR. Detailed and appropriate procedures or software will be defined to verify operation of AD.. For unit and CSC level tests performed by the contractor, test procedures will be reviewed, test execution witnessed, and results evaluated. Discrepancies will be identified and tracked for the life of the project. Individual software modules and associated software development files will be selectively and periodically evaluated as they are maintained by the contractor.

d. IV&V Activities to the Completion of JAI. Detailed procedures will be defined for the review of test plans and procedures during the phases of PAT&E (from second FAT through final SAT) and OT&E/integration. Execution of testing related to these phases will be witnessed, and test results evaluated. Discrepancies will be identified and tracked for the life of the project.

CHAPTER 9. INTEGRATED LOGISTICS SUPPORT

90. MAINTENANCE CONCEPT. The ADAS maintenance concept is based on two levels of maintenance as specified in the ADAS System Specification (FAA-E-2804) and Order 6000.30A, Airway Facilities Service Policy Decisions for the Maintenance Program of the 1990's: 1) site organizational maintenance; 2) depot maintenance. Depot-level maintenance and supply support will be provided by the original equipment manufacturer (OEM) or by the maintenance contractor. FAA Logistics Center involvement in maintenance contract funding and management is currently undetermined. All maintenance and parts for the ADAS will be provided by contract maintenance for the lifetime of the ADAS system, beginning with JAI completion at each site. Maintenance contractor requirements exclude electrical work external to contractor-provided equipment, failure due to causes other than ordinary use, and the furnishing of consumable supplies. Duringthecontractperiod, Government personnel will perform preventive maintenance and system diagnostics, and remove and replace faulty Line Replaceable Units (LRU).

a. ScheduledMaintenance. The maintenance contractorwillperform periodic preventive maintenance in accordance with the FAA-approved contractor's preventive maintenance schedule.

b. CorrectiveMaintenance. Themaintenance contractorwillperfom corrective maintenance and repair action necessary to restore equipment and verify equipment/service. The contractor will provide the Government with a continuaus telephone contact point for reporting outages of ADAS equipment or operating software. The contractor will respond to such problem notifications within 24 hours of receipt and submit a signed service report to designated Government representatives and to the CO upon the wmpletion of each maintenance call.

c. Remote Maintenance Monitoring (RMM). The ADAS will interface in the end state interface configuration with the FAA RMM system through the MPS.

d Software Maintenance. The ADAS PSF will be responsible for ADAS soft&e maintenance following ORD of the first ADAS site installation (see paragraph 97).

91. TRAINING.

a. Contractor Furnished Training. The ADAS contractor will develop and conduct ADAS training in accordance with FAA-STD-028, Contract Training Program. Test personnel from the FAA Technical Center will be provided with ADAS demonstration-type and "hands on" training on an informal basis at the contractor's facility. This will occur atanagreeabletimeprecedingthe

FAA's preparation of detailed ADAS OT&E/integration test procedures. The contractor will provide training at the FAA Academy subsequent to ADAS installation at that facility utilizing Government furnished equipment. Courses will include two classes in ADAS hardware maintenance (with a Government option for three additional classes) and two classes in ADAS softwaremaintenance. The wntractor will also provide technical support as required in these areas to impart subject matter expertise to FAA Academy instructors or an FAA training contractor, andtoregional facilities engineering personnel.

b. FAA Training Environment (FAA Academy). The ADAS installedatthe FAA Academy (AAC-940) will be utilized for training of FAA personnel. It will be configured by the contractor as a training environment, with 12 additional ASC's, an IPS to simulate ADAS interfaces forthetraining environment, and a data base to support them. Each console will be capable of all interactive functions as specified in FAA-E-2804 for the operational ADAS.

92. SUPPORT TOOLS AND TEST EQUIPMENT. All common andspecialtools and test equipment necessary for the maintenance of the ADAS will be identified by the contractor. Requirements for items not in the FAA inventory will be justified. The FAA will approve each type of equipment to be used. The wntractor will prepare a Support Equipment Plan (SEP), with first issuance 120 days after contract award, indicating the maintenance usage of all support and test equipment.

93. SUPPLY .

a. Contractor Spares. The ADAS wntractor shall furnish appropriate spare items (parts, LRU's, and assemblies) to be determined by a provisioning conference and as subsequently ordered at the discretion of the CO. The Government, at its discretion, may order additional spare items to be furnishedbythewntractor. The contractor shall recommend sitesparing levels for Government approval at the provisioning conference.

b. Initial Supply Support Allowance Chart (ISSAC) Items. Supply of ISSAC items shall be accomplished in accordance with Order 4620.3C, Initial Support for New or Modified Equipment Installations. Initial allowances of spare parts and supplies to be furnished to field facilities from FAA Logistics Center inventory, or through direct delivery from the OEM or maintenance contractor, are announced through ISSAC's. An ISSAC reflects the range and quantities of items of supply required for onsite support of ADAS sites under the ADAS maintenance concept.

c. Working Equipment. Initial allowances of working equipment are developed for the ADAS by the Airway Facilities organization, with the advice of other interested offices, and are published in Order 4630.2, Standard

Alluwanceof Supplies and Working Equipment for National Airspace System Facilities. Two groups of allowances are listed, Schedule A and Schedule B.

(1) Schedule A. The FAA Logistics Center is responsible for furnishing Schedule A items to field offices requisitioning authorized and requireditems.

(2) Schedule B. FAA regions are responsible for funding and providing Schedule B items through regional resources.

94. VENDOR DATA AND TECHNICAL MANUALS. The ADAS contractor is responsible for delivering two copies of the ADAS system documentation and technical manuals per each ADAS system to the FAA as part of the contract (the contract provides details on this documentation).

95. EQUIPMENT REMOVAL. ADAS is a new system and no equipment will be removed.

96. FACILITIES. AD.. installations at the 23 designated ARTCC's require the provision of adequate indoor space, power, access, andelectrical connectivity as described in paragraph 33 (including telecommunications lines for the AWOS and the RMM). The FAA Technical Center installation (see paragraph 97) will require additional space to support ancillary test and development equipment and activities. The FAA Academy installation (see paragraph 91b) will require additional space tosupportthetrainingenvironment, equipment, and activities.

97. PROGRAM SUPPORT FACILITY (PSF). ASM-400 of the FAA Technical Center is designated as the ADAS PSF. ASM-400 will be responsible for ADAS software maintenance following handoff of configuration management responsibility from ANW-140. The PSF will include all hardware, software, and procedural documentation required for the development, generation, modification, configuration management, maintenance, testing, analysis, and debugging of all ADAS functional software, as specified in the contract. The PSF will also include a contractor-supplied test simulator, the IPS, to provide structured, repeatable simulation of ADAS external systems communications. Software maintenance will be performed at the PSF by the ADAS contractor under the direction of ASM-400 for a contracted period of 3 years. OT&E/integration testing of the ADAS will be performed at the PSF by ACN-250.

98.-99. RESEEWED.

CHAPTER 10. ADDITIONAL PROJECT IMPLEMENTATION ASPECTS

100.-109. RESERVED.

APPENDIX 1. ACRONYMS

A	Ampere
AAC	Aeronautical Center (Oklahoma City)
AAL	FAA Alaskan Region
AAP	Program Manager for Advanced Automation
AAT	Associate Administrator for Air Traffic
ACE	FAA Central Region
ACF	Area Control Facility
ACN	Engineering, Test, and Evaluation Service
ADAS	AWOS Data Acquisition System
ADAS/DP	ADAS Demonstration Project
AEA	FAA Eastern Region
AES	Systems Engineering Service (currently abolished)
AF	Airway Facilities
AGL	FAA Great Lakes Region
AHT	Office of Higher Education and Training
ASU	Logistics Service
AMC	Management and Control Service (currently abolished)
AND	Associate Administrator for NAS Development
ANE	FAA New England Region
ANM	FAA Northwest Mountain Region
ANS	NAS Transition Service
ANW	Weather and Flight Service Systems
APMR	Associate Program Manager for the Region
ARTCC	Air Route Traffic Control Center
ASA	Advanced System Acquisition Service (currently abolished)
ASC	ADAS System Console
ASE	NAS System Engineering Service
ASM	Systems Maintenance Service
ASO	FAA Southern Region
ASOS	Automated Surface Observing System
ASW	FAA Southwest Region
ATR	Air Traffic Plans and Requirements Service
AWOS	Automated Weather Observing System
AWP	FAA Western Pacific Region
CAI	Contractor Acceptance Inspection
CCB	Configuration Control Board
CDR	Critical Design Review
CLIN	Contract Line Item Number
CO	Contracting Officer
COTR	Contracting Officer's Technical Representative
CPU	Central Processing Unit
CSA	Configuration Status Accounting
CSC	Computer Software Component
CSCI	Computer Software Configuration Item

CSQPP	Computer Software Quality Program Plan
CTS	Coded Time Source
DLP	Data Link Processor
DOD	Department of Defense
DRAM	Dynamic Random Access Memory
DRR	Deployment Readiness Review
DT&E	Development Test and Evaluation
EXCOM	DRR Executive Committee
FAA	Federal Aviation Administration
FAT	Factory Acceptance Test
FCA	Functional Configuration Audit
FQR	Formal Qualification Review
HQ	Headquarters
Hz	Hertz
ICD	Interface Control Document
ILS	Integrated Logistics Support
IOC	Initial Operating Capability
IPS	Interactive Process Simulator
IRD	Interface Requirements Document
ISSAC	Initial Support for New or Modified Equipment Installations
IV&V	Independent Verification and Validation
JAI	Joint Acceptance Inspection
LCN	Local Communications Network
LRU	Line Replaceable Unit
LSAR	Logistics Support Analysis Records
ME	Maintenance Engineering
MPS	Maintenance Processor Subsystem
NADIN	National Airspace Date Interchange Network
NAILS	National Airspace System Integrated Logistic Support
NAILSMT	National Airspace System ILS Management Team
NAS	National Airspace System
NCP	NAS Change Proposal
NWS	National Weather Service
ONM	Operations and Maintenance
ORD	Operational Readiness Demonstration
OSC	Operational Site Configuration
OT&E	Operational Test and Evaluation
PA	Project Authorization
PAT&E	Production Acceptance Test and Evaluation
PCA	Physical Configuration Audit
PDR	Preliminary Design Review
PIDS	Prime Item Development Specification
PSF	Program Support Facility
PSN	Packet Switched Network
QRO	Quality Reliability Officer
RFA	Request for Action
RFP	Request for Proposal
RMM	Remote Maintenance Monitoring

RWP	Real-time Weather Processor
SAT	Site Acceptance Test
SCSI	Small Computer Systems Interface
SEP	Support Equipment Plan
SEI	System Engineer- and Integration
SOW	Statement of Work
SR	System Requirements
SS	System Specification
SSR	Software Specification Review
ST&E	Field Shakedown Test and Evaluation
T&E	Test and Evaluation
TOR	Technical Onsite Representative
TPRB	Test Policy and Planning Review Board
TSC	Transportation System Center
TRR	Test Readiness Review
V	volt
VDT	Video Display Terminal
VNTSC	Volpe National Transportation System Center
WMSCR	Weather Message Switching Center Replacement

APPENDIX 2. REFERENCES

In the event of conflict between the documents referenced hereinand the contents of this order, this order shall be considered the superseding requirement. The following references or latest revisions shall be used:

FAA Documents

AC 150/5220-16	Automated Weather Observing Systems (AWOS) for Non-Federal Applications (includes tailoring document 6/15/87).
	Aviation Weather Plan, January 1984
FAA-APO-83-6	Establishment and Discontinuance Criteria for Automated Weather Observing Systems (AWOS)
FAA-C-2454	Facility Site Preparation
FAA-E-2661	NADIN System Specification
FAA-E-2698	MPS System Specification
FAA-E-2732	Automated Weather Observing System Specification
FAA-E-2764	WMSCR System Specification
FAA-E-2804	ADAS System Specification
FAA-G-1210	Provisioning Technical Documentation
FAA-G-2100e	Electronic Equipment, General Requirements
FAA-STD-013a	Quality Control Program Requirements
FAA-STD-018	Computer Software Quality Program Requirements
FAA-STD-019a	Lightning Protection, Grounding, Bonding, and Shielding Requirements for Facilities
FAA-STD-020a	Transit Protection, Grounding, Bonding, and Shielding Requirements for Equipment
FAA-STD-021	Configuration Management

FAA-STD-024a	Preparation of Test and Evaluation Documentation
FAA-STD-028	Contract Training Program
FAA-STD-032	Design Standards for National Airspace System Physical Facilities
FAA-NAS-DD-1000	NAS Level I Design Document
FAA-NAS-SR-1000	NAS System Requirements Specification
FAA-NAS-SS-1000	NAS System Specification
FAA-NAS-Memo	ADAS Functional Requirements Memorandum
FAA-NAS-IC-25083101-01.A	AWOS/ADAS Interface Control Document
FAA-NAS-IR-21020000	LCN/User System Interface Requirements Document
FAA-NAS-K-25082501-00	RWP/ADAS Interface Control Document
FAA-NAS-IC-25082503	DLP/ADAS Interface Control Document
FAA-NAS-IC-25082507-00	WMSCR/ADAS Interface Control Document
FAA-NAS-IC-43020001-00	NADIN PSN X.25 Interface Control Document
FAA-NAS-IR-44010001	TE/Digital Interface Requirements Document
FAA-NAS-IR-51030002	MPS Automation Interface Requirements Document
FAA-NAS-IR-92020000A	CTS/User Systems Interface Requirements Document
FAA-NAS-IR-61002508	ACF/ADAS Interface Requirements Document
FAA-NAS-MD-110	Test Terms and Definitions for the NAS

FAA Orders

1380.40B	Airway Facilities Sector Level Staffing Standard System

1800.8F	National Airspace System Configuration Management
1800.63	National Airspace (NAS) Development Readiness Review (DRR) Program
1810.1E	Major Acquisitions
1810.4A	FAA NAS Test and Evaluation Program
1812.5	System Requirements Statement, Automated weather observing systems
2500.10	Call for Estimates - General Information and Policies
2510.5A	Fiscal Programming and Reporting Procedures for the Facilities and Equipment Appropriations
4250.9A	Field Inventory Management and Replenishment Handbook
4402.55A	FAA Procurement Manual - Real Property
4426.1	Uniform Relocation Assistance and Real Property Acquisition Policy Act 1970 (P.L. 91-646)
4620.3C	Initial Support for New or Modified Equipment Installations
4630.2	Standard Allowance of Supplies and Working Equipment for National Airspace System Facilities
4650.7	Management of Project Material
4660.1	Real Property Handbook
4660.3B	Real Property Acquisitions and Disposals
4800.2A	Utilization and Disposal of Excess and Surplus Personal Property
6000.30A	Airway Facilities Service Policy Decisions for the Maintenance Program of the 1990's

6030.45	Facility Reference Data File
6200.4C	Test Equipment Management Handbook
7000.2A	FAA/NOAA Memorandum of Agreement
7031.2C	Airway Planning Standard #1 - Technical Air Navigation Facilities & Air Traffic Control Services
7110.65E	Air Traffic Control

DOT orders

4200.14B	Major Systems Acquisition and Approval

Military Standards

DOD-SD-2167	Defense System Software Development
DOD-STD-2168	Defense System Software Quality Program
MIL-STD-1521	Technical Review and Audits for Systems, Equipments, and Computer Software

ADAS Contract Documents

CPE/ADAS/HARD/PSP/001-4.1	ADAS Prime Item Development Specification Type B1 (CDRL A024)
CPE/ADAS/INST/PLN/001-3	ADAS Installation and Checkout Plan (CDRL A037)
CPE/ADAS/INST/PLN/4xx	ADAS Site Unique Plans (CDRL A037-4xx)

APPENDIX 3. ADAS SITE LISTINGS AND INSTALLATION SCHEDULE

The installation schedule presents the following dates associated with each installation:

(1) Regional PA Assignment
(2) Contractor Site Survey
(3) Site Preparation Cmplete (120 days prior to delivery)
(4) Joint Walkthrough (90 days prior to delivery)
(5) Scheduled Delivery
(6) SAT Complete

ADAS sites are numbered according to the installation schedule.

	Site	Schedule
1	FAA Technical Center (ACN-300) International Airport Atlantic City, NJ 08405	(1) Jun 1990 (2) Oct 1990 (3) Apr 1992 (4) Jul 1992 (5) Oct 12, 1992 (6) Nov 13, 1992
2	FAA Academy Mike Monroney Aeronautical Center 6500 South MacArthur Oklahoma City, OK 73125	(1) Jun 1990 (2) Nov 1990 (3) Jul 1992 (4) Oct 1992 (5) Jan 11, 1993 (6) Jan 29, 1993
3	FAA ARTCC/Seattle 3101 Auburn Way, South Auburn, WA 98002	(1) Jun 1990 (2) Dec 1990 (3) Nov 1992 (4) Feb 1993 (5) May 26, 1993 (6) Jun 11, 1993
4	FAA ARTCC/Atlanta 299 Woolsey Road Hampton, GA 30228	(1) Jun 1990 (2) Jan 1991 (3) Dec 1992 (4) Mar 1993 (5) Jun 23, 1993 (6) Jul 09, 1993
5	FAA ARTCC/Chicago 619 Indian Trail Road Aurora, IL 60506	(1) Jun 1990 (2) Mar 1991 (3) Jan 1993 (4) Apr 1993 (5) Jul 21, 1993 (6) Aug 06, 1993

	Site	Schedule
6	FAA ARTCC/Fort Worth 13800 FAA Road Euless, TX 76155	(1) Jun 1990 (2) Nov 1990 (3) Feb 1993 (4) May 1993 (5) Aug 18, 1993 (6) Sep 03, 1993
7	FAA ARTCC/Cleveland 326 East Lorain Street Oberlin, OH 44074	(1) Jun 1990 (2) Mar 1991 (3) Mar 1993 (4) Jun 1993 (5) Sep 15, 1993 (6) Oct 01, 1993
8	FAA ARTCC/Houston Intercontinental Airport 16600 JF Kennedy Boulevard Houston, TX 77205	(1) Jun 1990 (2) Nov 1990 (3) Apr 1993 (4) Jul 1993 (5) Oct 13, 1993 (6) Oct 29, 1993
9	FAA ARTCC/Denver 2211 17th Avenue Longmont, CO 80501	(1) Jun 1990 (2) Feb 1991 (3) May 1993 (4) Aug 1993 (5) Nov 10, 1993 (6) Nov 26, 1993
10	FAA ARTCC/Washington 825 East Market Street Leesburg, VA 22075	(1) Jun 1990 (2) Apr 1991 (3) Jun 1993 (4) Sep 1993 (5) Dec 07, 1993 (6) Dec 23, 1993
11	FAA ARTCC/Salt Lake City 2150 West 700 North Salt Lake City, UT 84116	(1) Jun 1990 (2) Feb 1991 (3) Jul 1993 (4) Oct 1993 (5) Jan 05, 1994 (6) Jan 21, 1994
12	FAA ARTCC/New York 4205 Johnson Avenue Ronkonkoma, NY 11779	(1) Jun 1990 (2) Oct 1990 (3) Aug 1993 (4) Nov 1993 (5) Feb 02 1994 (6) Feb 18, 1994

	Site	Schedule
13	FAA ARTCC/Kansas City 201 S. Clairborne Road Olathe, KS 660624689	(1) Jun 1990 (2) Apr 1991 (3) Sep 1993 (4) Dec 1993 (5) Mar 02, 1994 (6) Mar 18, 1994
14	FAA ARTCC/Minneapolis 512 Division Street Farmington, MN 55024	(1) Jun 1990 (2) Mar 1991 (3) Oct 1993 (4) Dec 1993 (5) Mar 30, 1994 (6) Apr 15, 1994
15	FAA ARTCC/Albuquerque 8000 Louisiana Boulevard, NE Albuquerque, NM 87109	(1) Jun 1990 (2) Feb 1992 (3) Oct 1993 (4) Jan 1994 (5) Apr 27, 1994 (6) May 13, 1994
16	FAA ARTCC/Oakland 5125 Central Avenue Fremont, CA 94536	(1) Jun 1990 (2) Dec 1990 (3) Nov 1993 (4) Feb 1994 (5) May 25, 1994 (6) Jun 10, 1994
17	FAA ARTCC/Memphis 3229 Democrat Road Memphis, TN 38118	(1) Jun 1990 (2) Apr 1991 (3) Dec 1993 (4) Mar 1994 (5) Jun 22, 1994 (6) Jul 08, 1994
18	FAA ARTCC/Los Angeles 2555 East Avenue Palmdale, CA 93550	(1) Jun 1990 (2) Dec 1990 (3) Jan 1994 (4) Apr 1994 (5) Jul 20, 1994 (6) Aug 05, 1994
19	FAA ARTCC/Miami 7500 NW 58th Street Miami, FL 33166	(1) Jun 1990 (2) Jan 1991 (3) Feb 1994 (4) May 1994 (5) Aug 17, 1994 (6) Sep 02, 1994

	Site	Schedule
20	FAA ARTCC/Indianapolis Indianapolis International Airport 2000 Bauman Road Indianapolis, IN 46241	(1) Jun 1990 (2) Mar 1991 (3) Mar 1994 (4) Jun 1994 (5) Sep 14, 1994 (6) Sep 30, 1994
21	FAA ARTCC/Jacksonville 811 East Second Street Hilliard, FL 32046	(1) Jun 1990 (2) Jan 1991 (3) Apr 1994 (4) Jul 1994 (5) Oct 12, 1994 (6) Oct 28, 1994
22	FAA ARTCC/Boston 35 Northeastern Boulevard Nashua, NH 03062	(1) Jun 1990 (2) Oct 1990 (3) May 1994 (4) Aug 1994 (5) Nov 09, 1994 (6) Nov 25, 1994
23	FAA ARTCC/Honolulu ARTCC Building - Diamond Head Crater 4204 Diamond Head Road Honolulu, HI 96816	(1) Jun 1990 (2) Jun 1991 (3) Jun 1994 (4) Sep 1994 (5) Dec 07, 1994 (6) Dec 23, 1994
24	FAA ARTCC/Anchorage 5400 Davis Highway Anchorage, AK 99506	(1) Jun 1990 (2) Jul 1991 (3) Jul 1994 (4) Oct 1994 (5) Jan 04, 1995 (6) Jan 20, 1995
25	TRACON/New York 1515 Stewart Avenue Westbury, NY 11590	(1) Jun 1990 (2) Oct 1990 (3) Aug 1994 (4) Nov 1994 (5) Feb 01, 1995 (6) Feb 17, 1995

APPENDIX 4. COMPARATIVE SCHEDULES FOR NAS SYSTEMS

The comparative schedule for delivery of the ADAS, DLP, and RWP is given for each site. Sites are numbered according to the ADAS installation schedule.

DLP dates are current as of November 18, 1991. ORD will occur after delivery of associated Mode Select Beacon Systems which are now scheduled for June 30, 1992. New York TRACON will not receive a DLP.

RWP procurement was placed on-hold until further notice. The RWP system passed DT&E successfully, but the procurement was placed on-hold because of budget and schedule delays associated with other systems of the NAS.

Site	System	Delivery
1 FAA Tech Center	ADAS	Oct 12, 1992
	DLP	Aug 12, 1988
	RWP	on-hold
2 FAA Academy	ADAS	Jan 11, 1993
	DLP	Oct 06, 1989
	RWP	on-hold
3 Seattle	ADAS	May 26, 1993
	DLP	Aug 03, 1992
	RWP	on-hold
4 Atlanta	ADAS	Jun 23, 1993
	DLP	May 25, 1992
	RWP	on-hold
5 Chicago	ADAS	Jul 21, 1993
	DLP	Jul 19, 1993
	RWP	on-hold
6 Fort Worth	ADAS	Aug 18, 1993
	DLP	Mar 16, 1992
	RWP	on-hold
7 Cleveland	ADAS	sep 15, 1993
	DLP	Dec 21, 1992
	RWP	on-hold

Site	System	Delivery
8 Houston	ADAS	Oct 13, 1993
	DLP	Jan 25, 1993
	RWP	on-hold
9 Denver	ADAS	Nov 10, 1993
	DLP	Jun 29, 1992
	RWP	on-hold
10 Washington	ADAS	Dec 07, 1993
	DLP	May 20, 1991
	RWP	on-hold
11 Salt Lake City	ADAS	Jan 05, 1994
	DLP	Nov 01, 1993
	RWP	on-hold
12 New York	ADAS	Feb 02, 1994
	DLP	Nov 16, 1992
	RWP	on-hold
13 Kansas City	ADAS	Mar 02, 1994
	DLP	May 10, 1993
	RWP	on-hold
14 Minneapolis	ADAS	Mar 02, 1994
	DLP	Apr 05, 1993
	RWP	on-hold
15 Albuquerque	ADAS	Apr 27, 1994
	DLP	Jun 14, 1993
	RWP	on-hold
16 Oakland	ADAS	May 25, 1994
	DLP	Aug 23, 1993
	RWP	on-hold
17 Memphis	ADAS	Jun 22, 1994
	DLP	Dec 06, 1993
	RWP	on-hold
18 Los Angeles	ADAS	Jul 20, 1994
	DLP	Oct 12, 1992
	RWP	on-hold

Site	System	Delivery
19 Miami	ADAS	Aug 17, 1994
	DLP	sep 07, 1992
	RWP	on-hold
20 Indianapolis	ADAS	sep 14, 1994
	DLP	Mar 01, 1993
	RWP	on-hold
21 Jacksonville	ADAS	Oct 12, 1994
	DLP	Sep 27, 1993
	RWP	on-hold
22 Boston	ADAS	Nov 11, 1994
	DLP	Apr 20, 1992
	RWP	on-hold
23 Honolulu	ADAS	Dec 04, 1995
	DLP	after 1995
	RWP	on-hold
24 Anchorage	ADAS	Jan 04, 1995
	DLP	after 1995
	RWP	on-hold
25 TRACON/New York	ADAS	Feb 01, 1995
	DLP	N/A
	RWP	on-hold

*U.S. Government Printing Office: 1992 — 6224960099