**ORDER**

6690.4

# PROJECT IMPLEMENTATION PLAN
# VOICE SWITCHING AND CONTROL SYSTEM

October 25, 1993

## DEPARTMENT OF TRANSPORTATION
### FEDERAL AVIATION ADMINISTRATION

Distribution: A-W (AP/SU/BU/LR/HT/SM/OS/NS/TR/TP)-2; A-X (AT/AF)-3; A-Y (ML/MA)-2; A-Z (CN)-2; A-FAF-0 (STD); A-FAT-0 (STD)

Initiated By: AAP-400

# RECORD OF CHANGES

DIRECTIVE NO. 6690.4

| CHANGE TO BASIC | SUPPLEMENT | | | OPTIONAL | CHANGE TO BASIC | SUPPLEMENTS | | | OPTIONAL |
|---|---|---|---|---|---|---|---|---|---|
| | | | | | | | | | |

# FOREWORD

This order provides technical guidance and management direction for the orderly implementation of the Voice Switching and Control System (VSCS) production units at the respective sites in accordance with the Program Engineering and Maintenance Service Program Master Plan for VSCS. This order establishes program management and project implementation responsibilities governing the activities of organizations in support of VSCS implementation in conformance with Order 1000.1, Policy Statement of the FAA. It also identifies and describes specific events and activities to implement the VSCS. The procedures and responsibilities in this order were developed using current agency directives.

James R. Monnie

Peter Challan
Program Manager for Advanced Automation

TABLE OF CONTENTS


| | Page No. |
|---|---|
| CHAPTER 1. GENERAL | 1 |
| 1. PURPOSE | 1 |
| 2. DISTRIBUTION | 1 |
| 3. DEFINITIONS | 1 |
| 4. AUTHORITY TO CHANGE THIS ORDER | 1 |
| 5. UPDATE AND REVISION COMMITMENT | 1 |
| 6. DEPLOYMENT READINESS REVIEW (DRR) | 1 |
| 7.-19. RESERVED | 1 |
| CHAPTER 2. PROJECT OVERVIEW | 3 |
| 20. VSCS PROGRAM MISSION STATEMENT | 3 |
| 21. SYNOPSIS | 3 |
| 22. PURPOSE | 3 |
| 23. HISTORY | 4 |
| 24. PROCUREMENT STRATEGY | 4 |
| 25. IMPLEMENTATION STRATEGY | 5 |
| 26.-29. RESERVED | 6 |
| CHAPTER 3. PROJECT DESCRIPTION | 7 |
| 30. FUNCTIONAL DESCRIPTION | 7 |
| FIGURE 3-1. VSCS FUNCTIONAL BLOCK DIAGRAM | 8 |
| 31. PHYSICAL DESCRIPTION | 10 |
| FIGURE 3-2. VSCS SUBSYSTEM BLOCK DIAGRAM | 10 |
| TABLE 3-1. VSCS/AAS EQUIPMENT | 12 |
| 32. SYSTEM REQUIREMENTS | 13 |
| TABLE 3-2. VSCS ENVIRONMENTAL REQUIREMENTS | 15 |
| FIGURE 3-3. EQUIPMENT ROOM POWER DISTRIBUTION | 16 |
| 33. INTERFACES | 17 |
| FIGURE 3-4. VSCS INTERFACES | 18 |
| 34.-39. RESERVED | 20 |
| CHAPTER 4. PROJECT SCHEDULE AND STATUS | 21 |
| 40. PROJECT SCHEDULES AND GENERAL STATUS | 21 |
| 41. MILESTONE SCHEDULE SUMMARY | 21 |
| 42. INTERDEPENDENCIES AND SEQUENCE | 21 |
| 43.-49. RESERVED | 22 |

Page No.

CHAPTER 5. PROJECT MANAGEMENT 23
50. PROJECT MANAGEMENT, GENERAL 23
TABLE 5-1. VSCS MATRIX SUPPORT 23
TABLE 5-2. VSCS PROGRAM MATRIX ORGANIZATION 24
51. PROJECT CONTACTS 30
52. PROJECT COORDINATION 30
53. PROJECT RESPONSIBILITY TABLE 43
54. PROJECT MANAGERIAL COMMUNICATIONS 43
FIGURE 5-1. VSCS FIELD USER TEAMS 44
55. IMPLEMENTATION STAFFING 48
56. PLANNING AND REPORTS 48
TABLE 5-3. AAP-420 IMPLEMENTATION STAFF 49
57. APPLICABLE DOCUMENTS 52
58.-59. RESERVED 61

CHAPTER 6. PROJECT FUNDING 63
60. PROJECT FUNDING STATUS 63
61. REGIONAL/FACILITY COST ESTIMATES 63
62. F&E PROJECT FUNDING DISTRIBUTION 64
63.-69. RESERVED 64

CHAPTER 7. DEPLOYMENT 65
70. GENERAL DEPLOYMENT ASPECTS 65
FIGURE 7-1. VSCS TRANSITION SWITCH 66
71. SITE PREPARATION 68
72. DELIVERY 71
73. INSTALLATION PLAN 72
74. PLANNED PRODUCT IMPROVEMENTS (PPI) 73
FIGURE 7-2. FRAME GROUP RELATIONSHIP 74
75.-79. RESERVED 75
FIGURE 7-3. VSCS FLOOR PLAN 76

CHAPTER 8. VERIFICATION 77
80. OVERVIEW OF VERIFICATION AND TESTING 77
FIGURE 8-1. VSCS TESTING FLOWCHART 78
81. FACTORY VERIFICATION 80
82. VSCS CONTRACTOR-CONDUCTED SITE TESTING 81
83. CONTRACT ACCEPTANCE INSPECTION (CAI) 82
84. FAA INTEGRATION TESTING AND EVALUATION (IT&E) 82
85. JOINT ACCEPTANCE INSPECTION (JAI) 83
86. Initial Operational Capability (IOC) 84
87. SYSTEM SHAKEDOWN AND OPERATIONAL TRANSITION 85
TABLE 8-1. FAILURE RECOVERY FOR FAILURE CLASSES 94
88. OPERATIONAL READINESS DEMONSTRATION (ORD) 94
89. PLANNED PRODUCT IMPROVEMENT (PPI) VERIFICATION REQUIREMENTS 95

Page No.

CHAPTER 9. INTEGRATED LOGISTICS SUPPORT 97
90. BACKGROUND 97
91. MAINTENANCE CONCEPT 97
92. TRAINING 103
TABLE 9-1. NUMBERS OF AF PERSONNEL TO BE TRAINED 104
TABLE 9-2. AF COURSE LENGTHS 104
TABLE 9-3. AT COURSE REQUIREMENTS (per site) 108
TABLE 9-4. AT COURSE DURATIONS 108
TABLE 9-5. OT&E/SST TRAINING DURATION 109
93. SUPPORT TOOLS AND TEST EQUIPMENT 111
94. SUPPLY SUPPORT 112
95. VENDOR DATA AND TECHNICAL MANUALS 114
96. EQUIPMENT REMOVAL 115
97. FACILITIES 115
98. NAILS PLAN 115
99. RESERVED 116

CHAPTER 10. ADDITIONAL PROJECT IMPLEMENTATION ASPECTS 117
100. VSCS CONFIGURATION MANAGEMENT (CM) 117
101.-109. RESERVED 118

APPENDIX 1. DEFINITIONS 1

APPENDIX 2. ACRONYMS 1

APPENDIX 3. VSCS SCHEDULES 1
FIGURE 1. VSCS INTERDEPENDENCY SCHEDULE 2
FIGURE 2. VSCS DELIVERY SCHEDULE 3

APPENDIX 4. VSCS PROJECT CONTACTS 1

APPENDIX 5. VSCS RESPONSIBILITY MATRIX 1
FIGURE 3. SITE PREPARATION PHASE 3
FIGURE 4. INSTALLATION AND CHECKOUT PHASE 4
FIGURE 5. INTEGRATION AND ACCEPTANCE TEST 5
FIGURE 6. OPERATIONAL SITE TESTING PHASE 6
FIGURE 7. OPERATIONAL SHAKEDOWN PHASE 7
FIGURE 8. COMMISSIONED OPERATION PHASE 8
FIGURE 9. ALL PHASES - CDRL REVIEWS 9
FIGURE 10. SITE PREPARATION PHASE - AMC 10
FIGURE 11. INSTALLATION AND CHECKOUT PHASE - AMC 11
FIGURE 12. INTEGRATION AND ACCEPTANCE PHASE - AMC 12
FIGURE 13. OPERATIONAL SITE TESTING PHASE - AMC 13
FIGURE 14. ALL PHASES - AMC 14

Page No.

APPENDIX 6. VSCS FIELD STATUS NOTICE PROCEDURE 1
FIGURE 15. VSCS FIELD REPORTING PROCEDURES 2
FIGURE 16. RECOMMENDED DOS FILE NAMING CONVENTION 3
FIGURE 17. EXAMPLE VSCS FIELD STATUS NOTICE FORM 5

APPENDIX 7. SHAKEDOWN FLOWCHARTS 1

# CHAPTER 1. GENERAL

1. PURPOSE. This order provides the Project Implementation Plan (PIP) for the Voice Switching and Control System (VSCS) and presents overall technical guidance and management direction for the orderly implementation of the VSCS production systems at the respective sites. This order establishes program management and project implementation responsibilities governing the activities of organizations in support of VSCS implementation. It identifies and describes specific events and activities to implement the VSCS. Additionally, this order provides high-level guidance upon which the preparation of site-specific implementation plans may be based.

2. DISTRIBUTION. This order is distributed to the division level in the Offices of the Program Manager for Advanced Automation, Associate Administrator for Contracts and Quality Assurance, Budget, Labor and Employee Relations, and Training and Higher Education; the Systems Maintenance, Operational Support, NAS Systems Engineering, NAS Transition and Implementation, Air Traffic Plans and Requirements, Air Traffic Rules and Procedures Services; division level to the FAA Logistics Center and FAA Academy at the Mike Monroney Aeronautical Center, and the Engineering Test and Evaluation Service at the FAA Technical Center; branch level to regional Air Traffic and Airway Facilities divisions and a standard distribution to all Airway Facilities and Air Traffic field offices.

3. DEFINITIONS. Definitions are provided in appendix 1 and an acronym list is provided in appendix 2.

4. AUTHORITY TO CHANGE THIS ORDER. Updates, revisions, or changes to this order may be authorized only by the Program Manager for VSCS, AAP-2V.

5. UPDATE AND REVISION COMMITMENT. Updates and revisions to this order will be made annually.

6. DEPLOYMENT READINESS REVIEW (DRR). The DRR process is contained in Order 1800.63, NAS Deployment Readiness Review (DRR) Program, and is appropriately discussed throughout this order and subparagraph 70b. Associate Administrator for Airway Facilities shall make the VSCS deployment decision (see Order 1810.1F, Acquisition Policy).

7.-19. RESERVED.

# CHAPTER 2. PROJECT OVERVIEW

20. VSCS PROGRAM MISSION STATEMENT. To develop and implement the VSCS which provides quality voice communications; supports the Advanced Automation System (AAS); meets requirements; and is reliable, fully integrated with the National Airspace System (NAS), supportable, operationally acceptable, and within cost and schedule.

21. SYNOPSIS. The VSCS is a computer-controlled switching system that will provide Air Traffic (AT) controllers with the means to establish all voice communications necessary for air traffic control (ATC) operations. The VSCS is flexible enough to be compatible with existing ATC consoles (M-1) and the follow-on Initial Sector Suite System (ISSS) of the AAS. A key feature of the VSCS compatibility with ISSS is the ability for rapid reconfiguration of the communications system to meet changing operational needs. The VSCS supports expansion and/or terminal consolidation into the Area Control Computer Complex (ACCC). The VSCS is scheduled to be installed at the FAA Technical Center (ACT), Mike Monroney Aeronautical Center (AMC), 20 Continental United States (CONUS) Air Route Traffic Control Centers (ARTCC), Anchorage ARTCC, the Honolulu Combined Center Radar Approach Control (CERAP), Southern California Terminal Radar Approach Control (TRACON), and the New York TRACON. The VSCS Program has options to procure an additional 24 systems.

22. PURPOSE. The VSCS provides an integrated air-to-ground (A/G) and ground-to-ground (G/G) voice communications system that meets current and future operational and maintenance requirements at a minimum cost. Order 7032.4, Air Traffic Service Operational Requirements For VSCS, identifies the objectives of the Capital Investment Plan (CIP). Implementation of VSCS will:

a. Satisfy communications system performance criteria in the new AAS environment.

b. Provide operational flexibility for rapid reconfiguration and adaptability to changes in the Area Control Facility (ACF) environment.

c. Reduce the total cost of communications services.

d. Replace existing aging equipment with a modern, reliable, solid-state technology-based system.

e. Reduce controller workload in the use of the communications system.

23. HISTORY. In December 1981, the FAA chartered a comprehensive NAS Plan for modernizing and improving ATC and Airway Facilities (AF) through the year 2000. As part of the NAS Plan, Order 7032.4 was issued on January 16, 1984, defining the operational system requirements for VSCS and establishing the following five goals for the system.

a. A high level of system reliability.

b. Expandability.

c. Ease and speed in reconfiguration.

d. Simple to operate system.

e. Fail/soft system design.

On December 31, 1991, the VSCS contract was awarded to Harris Corporation of Melbourne, Florida. As some VSCS requirements have evolved and additional requirements have been added, replanning (REPLAN) of VSCS implementation has warranted changes in the implementation schedule contained in appendix 3. These changes have affected the area of Computer Human Interface (CHI); system performance; operational requirements, such as adding a Position Split-Functionality mode (NAS Change Proposal [NCP] 15193); logistics and training; and deployment or implementation strategy that will be amplified throughout this order. Future changes to appendix 3 will be implemented through updates to this order, and will also be reflected as changes to the baselined schedule contained in the material delivery forecast module (MDFM).

24. PROCUREMENT STRATEGY. The VSCS procurement is being accomplished in two phases: the prototype development phase (PDP) and the production phase.

a. Prototype Development Phase (PDP). During the PDP, potential VSCS contractors designed and developed two prototype systems in parallel. The first system, identified as the "current prototype system," was a 60-position switch PDP designed to the Selected M-1/ISSS Essential Requirements as defined in the VSCS Product Specification, without addendum. The purpose of this system was to conceptually demonstrate a system that meets the communications needs of the ISSS. The analysis of the test and evaluation results of that system contributed to the determination of which competing VSCS contractor was awarded the

production contract. The winning VSCS contractor developed a second system, a 430-position prototype development phase upgrade (PDPU), that was integrated into the M-1/ISSS Essential Requirements as identified in the VSCS Product Specification with addendum 1. Its purpose was to demonstrate a more fully refined approach to meeting ISSS requirements in a full-up system.

b. Production Phase. During this phase, a current prototype system was delivered to ACT, and a preliminary operational test and evaluation (OT&E) (see subparagraph 80c) was completed. After completion of the preliminary OT&E, the prototype upgrade was shipped to ACT. After acceptance of the prototype upgrade, the VSCS contractor was authorized to begin a limited production of five systems. The FAA will perform OT&E on the prototype upgrade. After successful completion of OT&E, the VSCS contractor will be authorized to begin full production of the VSCS. The VSCS contractor will install systems that meet the M-1/ISSS essential requirements at the AMC and the operational sites either upon delivery or through incremental system builds. After the initial installation of the VSCS at a site, the VSCS contractor will return to each site to retrofit the VSCS with planned, upgraded software for the M-1 Essentials, ISSS Transition, ISSS Supplement, and the planned product improvements (PPI). The PPI requirements are identified in the VSCS Product Specification, addendum 2.

25. IMPLEMENTATION STRATEGY. Due to the importance of AT voice communications at operational sites, the VSCS implementation must maintain operational continuity during the transition from the existing communications system (i.e., the WECO 300/4-channel radio equipment) to the VSCS. The VSCS console equipment (VCE) will be installed by the VSCS contractor in the M-1 consoles. Both the VSCS and the WECO 300/4-channel radio equipment communications systems will be connected through the VSCS transition switch, which will enable either system to be selected for use by the facility, but not simultaneously. Additionally, the transition switch will permit line-by-line switchover to provide individual circuit access for installation and test prior to cutover of the system. Approximately 4 to 6 months after the operational readiness date, or when directed by the Government, the VSCS transition switch, the WECO 300/4-channel radio equipment, and associated equipment will be removed from the facility following appropriate procedures, which includes decommissioning (see Order 6030.45A, Facility Reference Data File (FRDF)). After installation of the AAS common console, the VSCS contractor will support the installation and checkout of the VSCS console equipment (VCE) in the common console. This will be accomplished by connecting the common console to reserved ports on the VSCS. VSCS PPI will enhance the system to satisfy all

remaining operational requirements in accordance with Order 1810.1F. VSCS implementation strategy is further amplified throughout this order, and complete details of the VSCS implementation at each site are described in the VSCS contractor's Site Activation Plan (SAP) (CDRL - VP 13).

a. REPLAN. REPLAN impacts to VSCS have increased costs and its development schedule, both of which necessitated changes to the VSCS equipment delivery schedule in appendix 3.

b. REPLAN Impact to the Field.

(1) REPLAN impact to the field requires a phased implementation or segmented delivery of VSCS software and testing through three "incremental drops" at the first five or six sites. The remaining sites should receive a single VSCS delivery.

(2) The VSCS Cold Start requirement was deleted. Therefore, an Uninterruptible Power Supply (UPS) is not provided with the VSCS.

(3) The VSCS Console Equipment Trainers (VCET) will be delivered simultaneously with the VSCS equipment.

26.-29. RESERVED.

# CHAPTER 3. PROJECT DESCRIPTION

30. FUNCTIONAL DESCRIPTION. The VSCS provides for the selection, interconnection, activation, and reconfiguration of communications paths between the operating ATC positions, local radios, and remote radios. The general functional capabilities of the VSCS are discussed in the following subparagraphs. A functional block diagram of the VSCS is provided in figure 3-1. Detailed functional and technical requirements can be found in the VSCS Product Specification, FAA-E-2731F, with addendums 1 and 2.

a. A/G Communications. The VSCS provides A/G switching and the capability to select and control radio transmitters, receivers, and transceivers located at either local or remote radio sites via either the existing or planned radio interfaces. Additionally, the VSCS provides connectivity to, and control of, the Backup Emergency Communications (BUEC) system.

b. A/G Backup Switch. A separate switch is provided as a hot backup to the A/G switching and control functions of the VSCS. Upon a failure of the VSCS primary A/G switch, the VSCS A/G backup switch automatically assumes all functions of the primary A/G switch (see VSCS Product Specification paragraphs 3.1.3.1 and 3.5.2.1.4). The switching between the A/G backup and primary switches may also be performed manually from any authorized "classmarked" positions (i.e., controller, supervisor, etc.). Switching from primary A/G to the backup A/G switch may be accomplished manually from either discrete monitor and control (DMC) without any safeguards or restrictions, (e.g., classmark or password).

c. G/G Communications. The VSCS provides intercom (IC) connectivity to permit any position within a facility to establish voice communications to any other position in that facility. Interphone (IP) capability is provided for an ATC position to establish and receive calls to or from ATC positions at other ATC facilities. The VSCS provides an interface with the private automatic branch exchange (PABX) for access to external networks, including the Federal Telecommunications System (FTS) and the Public Switched Telephone Network (PSTN).

d. Modularity. The VSCS is a modular system and is expandable to support a maximum of 430 positions, 350 A/G frequencies, 240 BUEC frequencies, 570 G/G trunks, and 40 PABX circuits.

FIGURE 3-1. VSCS FUNCTIONAL BLOCK DIAGRAM

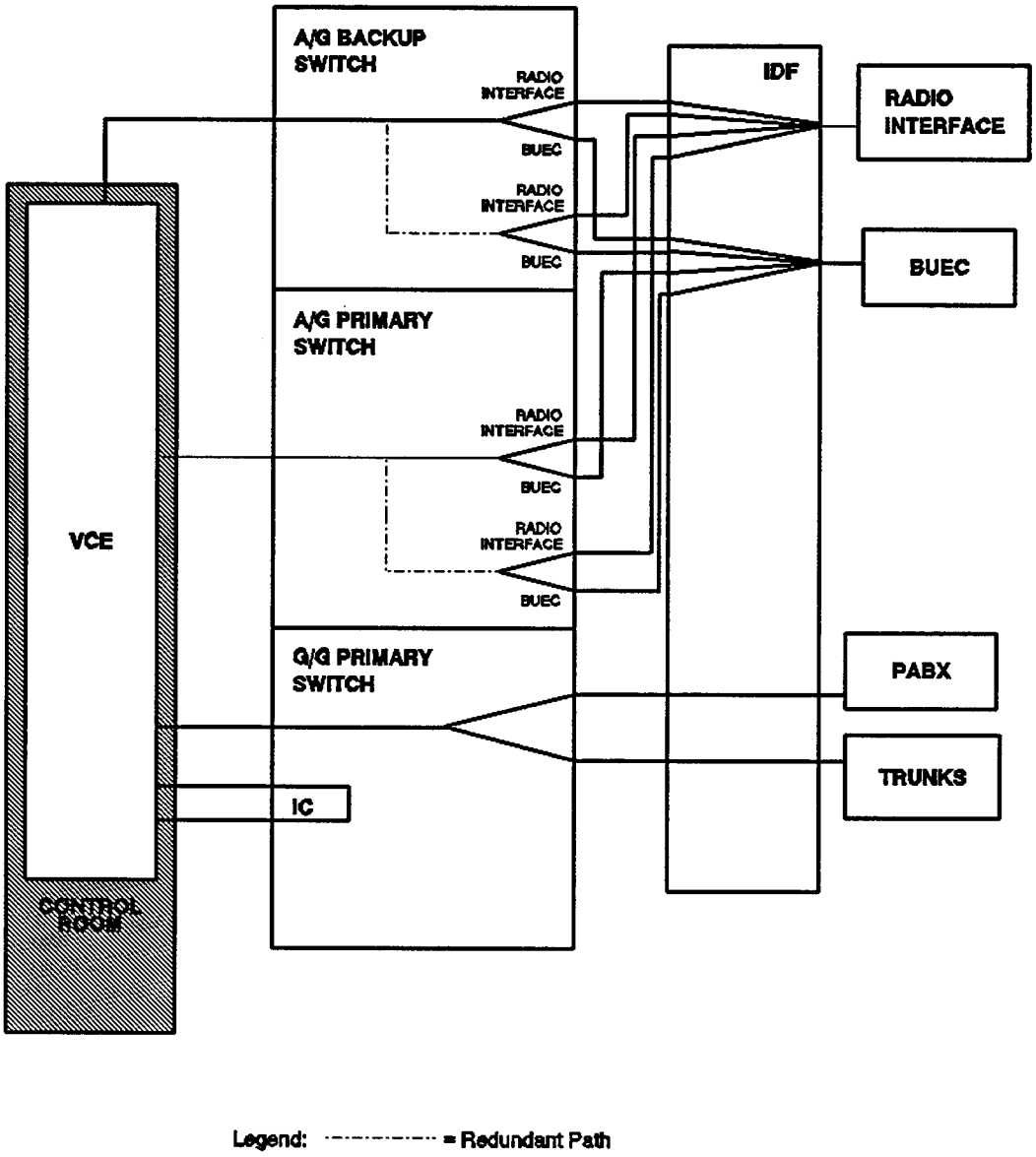

e. VSCS Features. Special features provided by the VSCS include: local and remote call override, call-holding, call-forwarding, call-transfer, position monitoring, the capability to switch audio between the headset and the loudspeaker, and three types of conference calls.

f. Reconfiguration. The VSCS provides a reconfiguration capability to allow the reassignment of a position's A/G and G/G circuits by authorized "classmarked" personnel. Reconfiguration includes direct access assignments and indications, radio frequency assignments, and classmarks. Reconfigurations are executed in accordance with predetermined configuration maps in response to commands from authorized "classmarked" personnel. Execution of reconfiguration commands do not interrupt or disturb calls in progress. Reconfigurations may be performed at the position, sector, area, or facility levels.

g. Classmarks. The VSCS has a software-controlled classmarking capability to restrict functions and access for all positions and circuits (see ATR-320's VSCS Site Configuration Policy, dated July 28, 1993 for additional information on classmarked positions).

h. Fault Detection and Isolation. The VSCS provides fault detection and isolation, including self-diagnostics and the capability to identify a failure and isolate the defective module, circuit, or trunk (see VSCS Product Specification paragraph 3.1.9). All detected faults are automatically reported to the VSCS maintenance position.

i. Position Split-Functionality Mode. The position split-functionality mode provides the capability to divide a position's voice communications such that one dual-jack module is dedicated to all A/G communications and the other dual-jack module is dedicated to all G/G communications. Split-functionality accommodates a three-person sector with a two common-console suite by permitting a two-console suite to operate three separate voice circuits. One potential application of split-functionality might involve adding a second "R" controller who handles the G/G communications while the first "R" controller handles the A/G communications. A Split-Functionality Trade Study Report was completed by the VSCS contractor on June 30, 1992, that defines this feature in more detail.

j. Bus Local Area Network (BusLAN). The BusLAN is an Institute of Electrical and Electronic Engineers (IEEE) 802.3 system consisting of thicknet coaxial cables that support the VSCS. The BusLAN's maximum cable run, from the BusLAN transceiver to the VSCS electronics module (VEM) that it

supports, is limited to 50 meters. The BusLAN consists of redundant bus connections between the A/G and G/G switches, the VCE, and the contractor traffic simulation unit (CTSU). The BusLAN transceivers supporting the M-1 control room will be mounted in the area above the rear of the M-1 cabinets. The BusLAN transceiver equipment supporting the ISSS common consoles in the control room will be located in the host computer room. The BusLAN transceiver equipment supporting the ISSS common consoles in the automation wing will be located in the wall cavity of the ISSS Dynamic Simulation (DYSIM) area.

31. PHYSICAL DESCRIPTION. The most complete information on the VSCS is contained in the CDRL's, especially the SAP (VP 13).

a. VSCS Subsystems. The VSCS is composed of the following six subsystems represented in figure 3-2 plus the VCET:

FIGURE 3-2. VSCS SUBSYSTEM BLOCK DIAGRAM

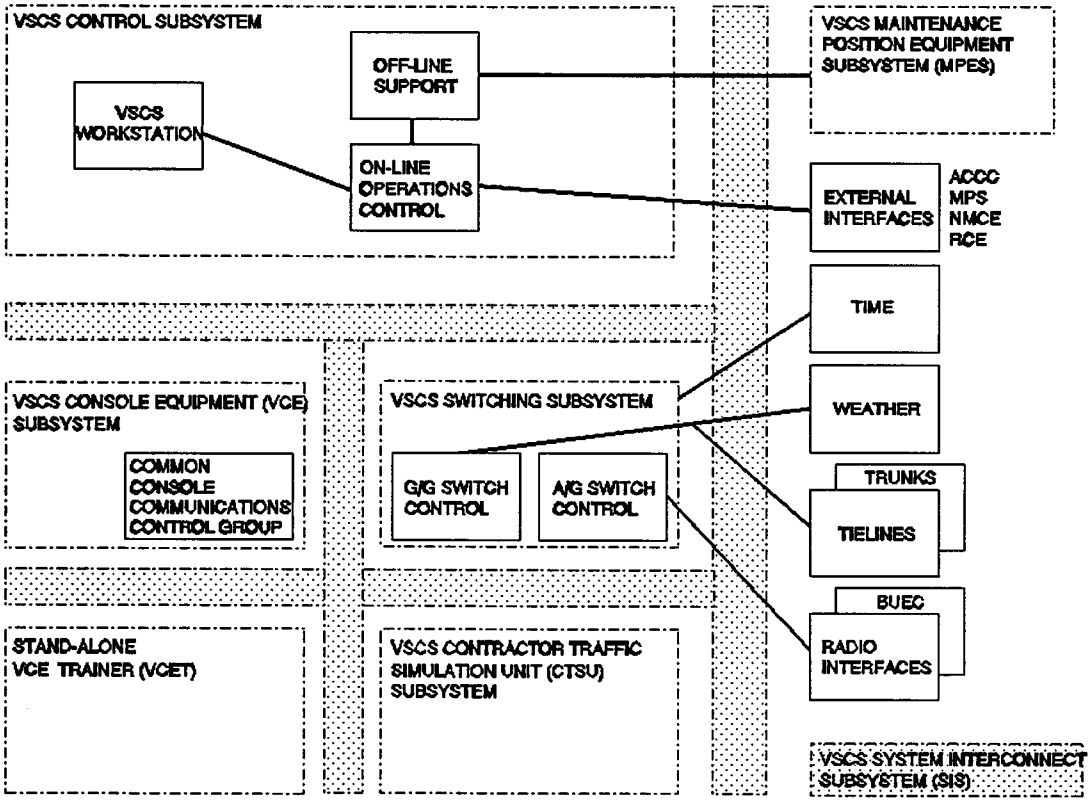

(1) The VCE Subsystem provides the human interface for control and access to the A/G and G/G communications functions of the VSCS. The VCE consists of the VEM, the Interactive Display Subsystem or VSCS display modules (VDM), the communications group, the VSCS Indirect Access Keypad (VIK), and the supervisory recorders as shown in table 3-1, along with other AAS equipment. The elements of the communications group for the maintenance console, ancillary positions, and supervisory positions will be determined at the site activation survey (SAS).

(2) The Switching Subsystem consists of an A/G switch, G/G switch, DMC, and timing equipment, as required by the VSCS Product Specification, FAA-E-2731F, and connectivity to the BUEC. It also provides interfaces to the external trunks and to an external PABX.

(3) The Maintenance Position Equipment Subsystem (MPES) consists of a maintenance position console assembly, maintenance operator human-machine interface workstations, built-in automated voice-channel test equipment rack, desktop and chatterlog[1] printers, the combined distribution frame (CDF) patch panels, and tandem operations console. The maintenance position equipment (MPE) provides AF personnel the capability to interface with, and perform, maintenance operations on the VSCS. The maintenance position console assembly consists of a VEM, VDM, VIK, and communications group.

(4) The Control Subsystem consists of the central processor, mass storage, workstation, high-speed printer, internal and external interfaces, and supports the VSCS management and maintenance functions. Although the DMC is physically located in the test equipment rack of the Switching Subsystem, it is a subfunction of the Control Subsystem and operates independently.

(5) The System Interconnect Subsystem (SIS) is the cable complement of power and signal cables that connects all VCE, switches, subsystems, workstations, racks, timing equipment, BusLAN transceivers, the intermediate distribution frame (IDF)/CDF including patch panels, and power conditioners. The SIS consists of interconnect cables only. The list of SIS cables is provided for each site with their deliverables.

---

[1] A Chatterlog Printer is a brandname impact dot-matrix printer manufactured by Tandem. It is listed as a deliverable in CDRL - VP 72, Table 1-8.

TABLE 3-1. VSCS/AAS EQUIPMENT

| SUBSYSTEM/EQUIPMENT ITEM | RESPONSIBLE FAA PROGRAM OFFICE | RESPONSIBLE CONTRACTOR |
|---|---|---|
| AAS Common Console (C/C) | AAP-200 | IBM Corp. |
| VSCS Console Equipment - AAS Supplied (VCEA) | AAP-200 | IBM Corp. |
| VSCS On/Off Switch | | |
| Communications Group (ISSS Timeframe): | | |
| Headset/Handset & Dual Jack Modules (DJM) (2) | | |
| A/G Loudspeaker Module & Controls (A/G LS) (1) | | |
| G/G Loudspeaker Module & Controls (G/G LS) (1) | | |
| Foot Switch (FS) (1) | | |
| Cables - VCEV (VEM) to VCEA Modules (5) | | |
| Cables - VCEV (VEM) to VCEV Modules (7) | | |
| Cables - VCEV (VEM) to AC Power (2) | | |
| VSCS Console Equipment - VSCS Supplied (VCEV) | AAP-400 | Harris Corp. |
| VEM (1) | | |
| VDM (2) | | |
| VIK (1) | | |
| Communications Group (M-1 Timeframe): | | |
| DJM (2) | | |
| A/G LS (1) | | |
| G/G LS (1) | | |
| FS (1) (ordered separately) | | |
| Headset/Handset | GFE | Sites |
| Supervisory Group: Recorders (2 to 6) (VCEV) | AAP-400 | Harris |
| Power (Main and Standby) | AAP-200 | FAA |

Note: VCEV (VCE - VSCS SUPPLIED); VCEA (VCE - AAS SUPPLIED)

(6) The CTSU (located only at the ACT) provides a simulated (traffic) loading on the A/G and the G/G switches for evaluating the performance of VSCS under peak traffic loads. It also simulates the ACCC, Maintenance Processor Subsystem (MPS), network management and control equipment (NMCE), and radio control equipment (RCE) interfaces. The CTSU equipment is unique to ACT.

b. VCET. The VCET is a stand-alone system used for the training of personnel on the VSCS (see paragraph 92). The VCET is not interconnected with the VSCS. Each VCET weighs 479 pounds (lbs.) and measures 2.8 feet (ft.) wide x 3.7 ft. deep (including 1.5 ft. for shelf or workspace) x 5.2 ft. high.

c. Data Entry Operator (DEO) Positions. DEO functions are supported within the VSCS Control Subsystem. The DEO position is a designated workstation(s) within each facility. The DEO functions create, modify, and validate the site VSCS configuration data base. The functions are split between the AT DEO position and the AF DEO position as referred to in the VSCS Product Specification. Separate workstations are provided with the VSCS for both positions. Further detailed information may be found in ATR-320's VSCS Site Configuration Policy document, dated July 28, 1993.

(1) AT DEO Position. It is envisioned that this function will provide site adaptation data (logical resources) coordination, configuration map functional control, utilities coordination, and reports coordination, along with the AF DEO Position.

(2) AF DEO Position. It is envisioned that this function will provide site adaptation data (hardware configuration and physical resources), utilities coordination, and reports coordination, along with the AT DEO Position.

32. SYSTEM REQUIREMENTS. The following basic VSCS requirements impact facility planning and are taken from the VSCS Product Specification, FAA-E-2731F. Site-specific planning will be contained in each site-developed Site Implementation Plan (SIP).

a. Weight Limits.

(1) Floor Loading. Loading conditions of each fully equipped cabinet and frame do not exceed 125 lbs./square (sq.) ft. The VSCS power conditioner loading is 294 lbs./sq. ft. Existing raised floors are designed to handle 150 lbs./sq. ft. Therefore, the power conditioners will be mounted on the slab beneath the raised floor on a Harris-provided support frame and extend up through the raised floor. The slab is designed for 300 lbs./sq. ft. VCET loading is 78 lbs./sq. ft.

(2) Cabinet Weight. The maximum weight of a single VSCS empty cabinet or frame does not exceed 200 lbs. Note the exceptions for the power conditioners (2225 lbs.) and the VCET (479 lbs).

b. Space Requirements.

(1) Dimensions. The equipment room frames and cabinets do not exceed 72 inches (in.) H x 36 in. W x 30 in. D. with the exception of the VSCS 20-20SC switch cabinet width of 37.5 in.

(2) Equipment Room Floor Space. The equipment room floor space required for a maximum sized VSCS is 2084 sq. ft. Equipment area required is 36 ft. x 54 ft., plus a 10 ft. x 18 ft. adjoining area.

(3) Workshop and Storage Area Floor Space. All site level storage and workshop equipment necessary to support the VSCS will be within an area of 15 ft. x 30 ft.

(4) VCET Floor Space. Each site is required to provide floor space, electrical power (120 VAC, 3.6 A), and Heating, Ventilation, and Air Conditioning (HVAC) to support the number of VCET's scheduled for delivery in accordance with appendix 3. The VCET area per unit should be 10.7 ft. x 2.8 ft. = 30.0 sq. ft., which includes required area to open the back access door, sitting and aisle space. VCET's may be placed in a common area or separate locations; and may be placed side-by-side or back-to-back.

NOTE: If placed back-to-back, the unit will have to be rolled out for maintenance. VCET's are completely self-contained and mobile.

(5) Training Space. Sites are required to provide adequate space for training of personnel in accordance with the criteria given in the VSCS Contract Training Plan (CDRL - VP 81) and discussed in chapter 9.

c. Environmental Requirements. The VSCS is designed for all combinations of environmental conditions shown in table 3-2. The VCET operating temperature is $+10^0$ to $40^0$C; the cooling requirement is 48 cubic ft./min.; the heat load is 1024 BTU/HR. The VSCS does not generate more than 505 KBTU/HR.

d. Electrical Power. The VSCS equipment meets the requirements for tolerances (inrush and harmonic content) for connection to the ARTCC critical bus as specified in the FAA-STD-2100E, Electronic Equipment and General Requirements, and FAA-E-2731F.

It is essential that ARTCC modifications one and two are completed prior to VSCS delivery to ensure adequate power and power panels for the VSCS in accordance with NAS-IC-80104201, ICD, VSCS to AC Power Supply. The FAA provides electrical power for VSCS at 208 VAC ± 10 percent, three phase, four-wire.

TABLE 3-2. VSCS ENVIRONMENTAL REQUIREMENTS

| Environment | Operating | Non-Operating |
|---|---|---|
| Altitude (Feet) | 0 to 10,000 | 0 to 50,000 |
| Temperature Range (Degrees Fahrenheit) | +50 to +104 | -58 to +158 |
| Relative Humidity (Percent) | 10 to 80 | 0 to 100 |

(1) VSCS Switching Equipment. The contractor-provided VSCS switching equipment utilizes the following:

(a) Voltage. 120 VAC ± 10 percent, single phase; or 208 VAC ± 10 percent, single phase, four-wire.

(b) Frequency. 60 Hertz (Hz) ± 2 percent.

(2) VSCS Console Equipment (VCE). The VCE operates from the following:

(a) Voltage. 208 VAC ± 10 percent, single phase, two-wire, plus the safety ground.

(b) Frequency. 60 Hz ± 2 percent.

(3) Power Distribution. The VSCS power is routed from two independent power paths, physically separate, such that a failure or disruption of one power bus does not interrupt power on the other bus. Power distribution is in accordance with the National Electrical Code, NFPA-70, Order 6950.15B, ARTCC Critical Load Circuits and Configuration, and FAA-C-1217D, Electrical Work-Interior, and is shown in figure 3-3 (also see the VSCS AC Power Supply IRD, NAS-IR-80104201). Critical power centers (CPC), shown in figure 3-3, are cut over one at a time in support of each of the four 40 Kilovoltampere (KVA) Power Conditioning Systems (PCS).

In most instances, power for the VSCS in the DYSIM comes from power distribution panels connected to CPC-E, F, G, or H, and not from CPC-D (test bus).

FIGURE 3-3. EQUIPMENT ROOM POWER DISTRIBUTION

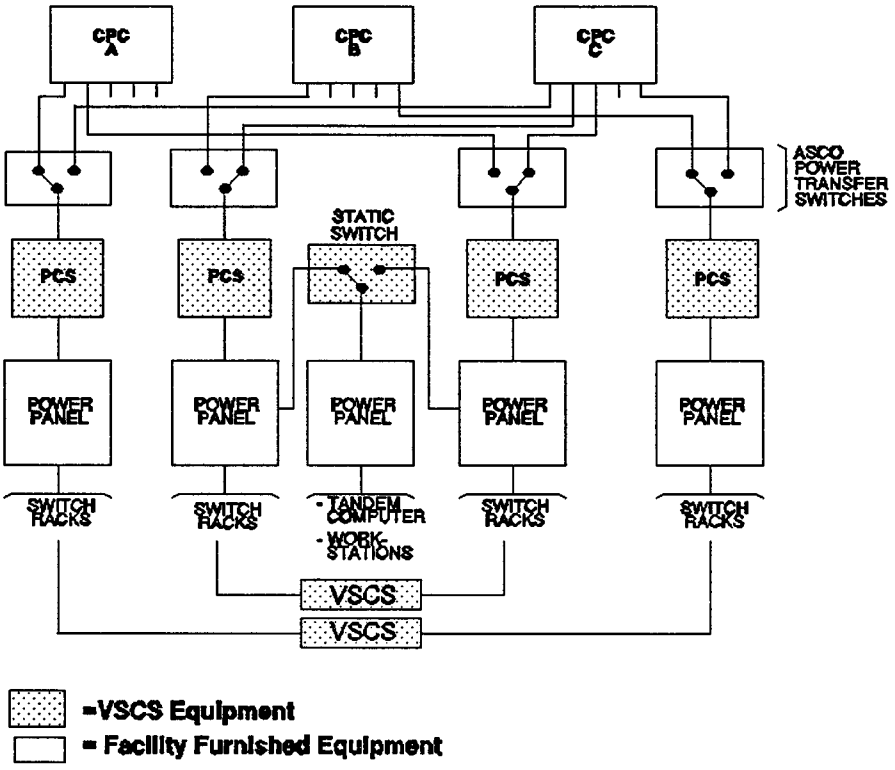


(4) Emergency Cut-off Switch. The GNAS Facilities Program Branch, ANS-230, has determined that an emergency cut-off switch is not required for VSCS.

(5) Wire/Cable Characteristics and Shielding. Wires, cables, and shielding meet the size and type requirements of FAA-STD-019 and FAA-STD-020. Power cables are unshielded, except where encased in conduit. Shielded cable is employed to separate signals from potential interference and to provide isolation from electrical and magnetic disturbances.

e. Area Supervisor/Ancillary Positions. It is the VSCS site's responsibility to provide suitable enclosures for the VCE and VSCS workstation equipment supporting supervisory/ancillary positions. The VSCS sites must determine the ancillary position locations and install the VSCS equipment enclosures prior to the VSCS contractor's onsite arrival 4 months prior to VSCS equipment delivery. See ATR-320's VSCS Site Configuration Policy dated July 28, 1993 for further guidance on enclosures, positions, and responsibilities. A mockup turret and pedestal have been established at the Development Demonstration Facility (DDF) in Gaithersburg, Maryland (see appendix 4 for DDF address), to provide the regions and sites with a possible enclosure design.

33. INTERFACES. The VSCS end-state interfaces with NAS subsystems are shown in figure 3-4 and described in the following subparagraphs.

a. Area Control Computer Complex (ACCC) - Processor to Processor. The VSCS to ACCC interface is capable of exchanging digital data to coordinate the proper configuration of the ARTCC position equipment. This interface is a PPI requirement and will be provided after the initial VSCS deployment (see schedule in appendix 3). The VSCS/ACCC interface is described in the VSCS-ACCC Part I interface control document (ICD), NAS-IC-21024201, Part I.

b. ACCC (Common Console). Through the evolution of the AAS to the end-state ACCC, the VSCS interface to the common console is through the VCE. The common console VCE consists of equipment supplied by both the VSCS and AAS contractors (see table 3-1). The VSCS interface to the common console is described in the VSCS-ACCC Part II ICD, NAS-IC-21024201, Part II.

c. BUEC. The VSCS interfaces to the BUEC to provide backup A/G communications in the event of a failure of the primary A/G radio, or access to or equipment in the remote center A/G (RCAG) communications facility. The VSCS interface to the BUEC is described in the VSCS-BUEC interface requirements document (IRD), NAS-IR-64024201.

d. PABX. The VSCS interface to the PABX provides VSCS access to FTS and the PSTN. The VSCS interface to the PABX is described in the Voice Switch-PABX IRD, NAS-IR-42009404.

e. Trunks. The VSCS interface to the trunks is described in the VSCS-Trunks IRD, VS-I-01, the VSCS-Tower Communications System (TCS) IRD, NAS-IR-42014202, and the Transmission Equipment Analog Interface IRD, NAS-IR-44010002. The Master Demarcation System (MDS) and the Leased Interfacility NAS Communications

FIGURE 3-4. VSCS INTERFACES

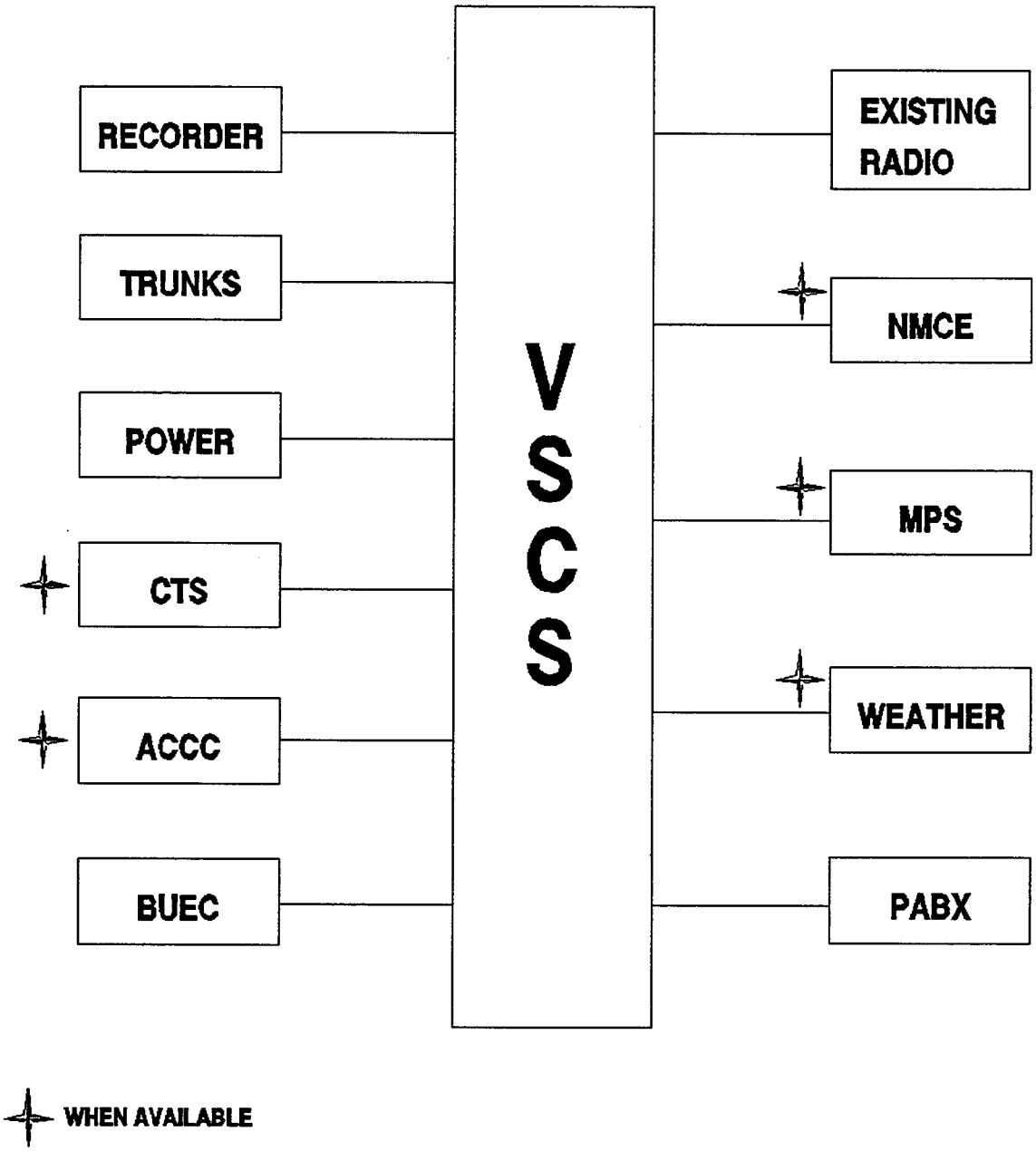

System (LINCS) must be installed and operational prior to the VSCS transition switch delivery in accordance with the schedule in appendix 3. The LINCS ARTCC backbone and MDS are expected to be installed and operational before delivery of the VSCS transition switch. However, this does not imply that the users will be cutover to LINCS at the MDS interface (especially LINCS services to remote facilities, which will take a longer time to implement). Although Telecommunications Management and Operations (TM&O) Division, ASM-300, is responsible for MDS and LINCS delivery and installation, the regions have the primary implementation responsibility for determining when to transition services/users over to LINCS. ASM-300 is responsible for defining the technical transmission parameters (e.g., maximum analog power, test tone specifications, etc.) at the MDS.

f. Recording Equipment. The VSCS interface to recording equipment provides a record of all voice communications at a position. The VSCS interface to the recording equipment is described in the Voice Switch-Recording IRD, NAS-IR-42004205. It is essential that the correct number of high capacity voice recorders (HCVR) are installed and operational prior to VSCS delivery in accordance with the schedule in appendix 3.

g. Coded Time Source (CTS). This is a dual-cesium clock which provides the time of day. The CTS interface provides the VSCS with timing information to synchronize its operation with those of the rest of the facility and to time-stamp messages and records. This interface is a PPI requirement and is provided after the initial VSCS deployment. The VSCS interface to the CTS is described in the CTS-User Systems IRD, NAS-IR-92020000. The VSCS has its own CTS which is more accurate than other CTS sources in the sites. Initially, the VSCS CTS will be synchronized with the recorders and manually interfaced with other site systems that utilize a CTS, until the automated interface to other systems is in place.

h. Existing Radio Interface. The VSCS interfaces to the existing radio equipment to provide access to A/G communications equipment. This interface includes both remote and local radio equipment. The VSCS interface to the existing radio equipment is described in the VSCS-Existing Radio Interface ICD, VS-I-03.

i. Weather. The weather interface provides a means for weather and forecast information to be transmitted to aircraft from the weather message recorder. This interface is a PPI requirement installed after the initial VSCS deployment. The VSCS interface to the weather message recorder is described in the VSCS-Weather IRD, VS-I-02.

j. Network Management and Control Equipment (NMCE). The VSCS to NMCE interface permits the interchange of advisory messages between the VSCS and the NMCE regarding the status of the transmission equipment trunks that provide connectivity between the VSCS and other voice switches. This interface is a PPI requirement installed after the initial VSCS deployment. The VSCS interface to the NMCE is described in the VSCS-NMCE IRD, NAS-IR-42004101.

k. Power. VSCS equipment installed in the equipment and control rooms receive alternating current (AC) power from dual AC power sources. The VSCS interface to the FAA power sources is via AC power distribution panels (see subparagraph 32d). The VSCS interface to the power system is described in the VSCS-AC Power Supply IRD, NAS-IR-80104201.

l. Maintenance Processor Subsystem (MPS). The interface between the VSCS and the MPS of the Remote Maintenance Monitoring System (RMMS) passes information regarding the status of VSCS hardware and software modules, external interfaces (e.g., trunks and BUEC), and AT controller positions. This interface is a PPI requirement installed after the initial VSCS deployment. The VSCS interface to the MPS is described in the VSCS-MPS IRD, NAS-IR-51034201.

m. Headsets. Headsets are presently provided under the leased or purchased WECO contract and are to be replaced under the ISSS contract. Since ISSS will be late arriving, arrangements are made with Telecommunications Network Management Branch, ASM-340, to extend the WECO contract until 1999 to continue to provide WECO communications, peripheral equipment such as headsets, and maintenance until ISSS is implemented.

34.-39. RESERVED.

# CHAPTER 4. PROJECT SCHEDULE AND STATUS

40. PROJECT SCHEDULES AND GENERAL STATUS. In October 1985, contracts were awarded to the American Telephone & Telegraph (AT&T) Federal Systems Division and the Harris Corporation to independently design, develop, and test a prototype VSCS. After completion of factory testing on the prototype systems, a production contract was awarded to the Harris Corporation. The regions may obtain the baselined VSCS schedule from the MDFM and appendix 3.

41. MILESTONE SCHEDULE SUMMARY. Milestones that pertain to implementation are listed in appendix 3, VSCS Schedules. Additionally, appendix 3 contains a site-specific delivery schedule.

42. INTERDEPENDENCIES AND SEQUENCE.

a. The following programs must be completed prior to VSCS transition switch delivery.

(1) Building Construction. Building construction is required at the following sites:

(a) Anchorage ARTCC. The VSCS will be installed at the Anchorage ARTCC in an expansion wing of the facility. The scheduled beneficial occupancy date is February 1, 1994.

(b) New York TRACON. The New York TRACON does not have space available for installation of the VSCS. The New York TRACON will either expand the current facility or build a new facility.

(c) Honolulu ACF. The VSCS will be installed at the new Honolulu ACF. The schedule for completion of the new facility is fiscal year (FY) 1998.

(d) Facility Modifications. Facility modifications one and two must be completed prior to VSCS transition switch delivery, especially the raised floor and power modifications.

(2) Distribution Frames. Prior to VSCS delivery, the FAA must install two distribution frames to allow the VSCS contractor access to FAA circuits. The first distribution frame installed is the MDS, which is the interface point for G/G circuits. ASM-300 is responsible for the delivery and installation of the MDS. The second distribution frame is the VSCS distribution frame/radio interface (VDF/RI) IDF. This frame

is the interface point between the VSCS and the A/G, BUEC, recording equipment, and PABX circuits. The VSCS division, AAP-400, is responsible for the delivery and installation of the VDF/RI IDF in accordance with the Top Level Design (A/G - FSD/VSCS-WP-001.5, dated February 24, 1993, and the G/G - FSD/VSCS-WP-004.1, dated March 1, 1993). Although ASM-300 and AAP-400 have delivery and installation responsibility of their respective frames, site Facilities and Equipment (F&E) will perform the actual installation of both the MDS and VDF/RI IDF.

(3) LINCS. The LINCS must be completed to the MDS prior to the VSCS transition switch delivery in accordance with the schedule in appendix 3.

(4) HCVR. The HCVR's must be installed and operational prior to VSCS equipment delivery in accordance with the schedule in appendix 3. The HCVR's are not routed to the VSCS transition switch (see figure 7-1).

b. ISSS. The VSCS is scheduled to be installed prior to ISSS deployment. Current AT policy requires a minimum of 6 months between the VSCS operational readiness date and ISSS initial operational capability (IOC). The schedule relationship between the VSCS and ISSS is shown in appendix 3.

43.-49. RESERVED.

# CHAPTER 5. PROJECT MANAGEMENT

50. PROJECT MANAGEMENT, GENERAL. The overall technical management of the VSCS Program is the responsibility of the program manager, AAP-2V. The program manager directs and manages all FAA activities for the acquisition and implementation of the VSCS. The program manager is responsible for the design, development, integrated logistics support, test and evaluation, full-scale production, and installation of the VSCS. The VSCS program manager is supported by a matrix team with responsibility for the functional areas identified in subparagraphs 50a - 50q. A generic summary of the matrix team is provided in table 5-1. Table 5-2 shows the VSCS Program matrix organization.

TABLE 5-1. VSCS MATRIX SUPPORT

| Matrix Member | Organization | Functional Area |
|---|---|---|
| PM | AAP-2V | Program Manager |
| PMB | AAP-10 | Business Manager |
| MVSCS | AAP-400 | VSCS Division Manager |
| DMVSCS | AAP-401 | VSCS Deputy Division Manager |
| APMED | AAP-410 | Engineer Development Branch |
| APMI | AAP-420 | Implementation Branch |
| APMCOTR | AAP-430 | COTR Branch |
| APMC | ASU-300 | Contract Administration |
| APMGC | AGC-500 | Legal Issues |
| APML | ANS-400 | Logistics |
| APMP | ATP-100 | AT Procedures |
| APMQ | ASU-400 | Quality - (QRO) |
| APMR | ATR-300 | AT Requirements |
| APMSE | ASE-200 | NAS Requirements |
| APMFES | AOS-500 | Field Engineering Support |
| APMSM | ASM-200 | Systems Maintenance |
| APMT&E | ACN-200 | Test & Evaluation |

TABLE 5-2. VSCS PROGRAM MATRIX ORGANIZATION

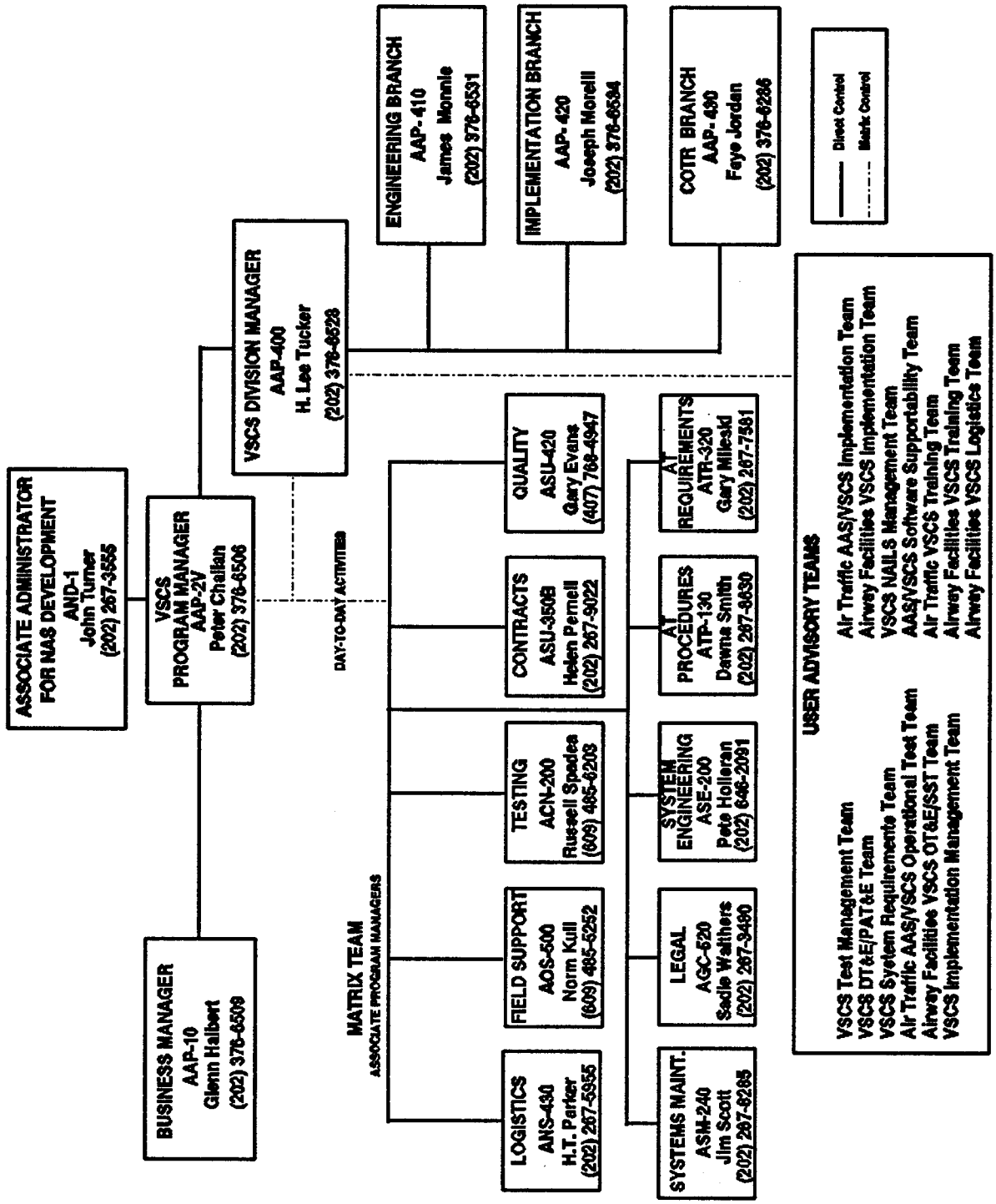

a. Program Manager for VSCS. The program manager (AAP-2V) The program manager directs and manages all FAA activities for the acquisition and implementation of the VSCS. The program manager is appointed by the administrator.

b. Program Manager for Business (PMB). The PMB (AAP-10) is responsible for financial planning, analysis, tracking of expenditures, and budget formulation for the VSCS program manager. The PMB is appointed by the VSCS program manager.

c. Division Manager for VSCS (MVSCS). The MVSCS (AAP-400) directs, manages, and accomplishes tasks to support the program manager. The MVSCS is appointed by the VSCS program manager.

d. Deputy Manager for VSCS (DMVSCS). The DMVSCS (AAP-401) directs, manages, and accomplishes tasks to support the implementation of VSCS and the MVSCS. The DMVSCS is appointed by AAP-400.

e. Associate Program Manager for Engineering Development (APMED). The APMED (AAP-410) directs, manages, and accomplishes engineering activities to support the acquisition of VSCS. The APMED is appointed by AAP-400.

f. Associate Program Manager for Implementation (APMI). The APMI (AAP-420) directs, manages, and accomplishes engineering tasks to support the implementation of VSCS. The APMI is appointed by AAP-400.

g. Associate Program Manager for the Contracting Officer's Technical Representative (APMCOTR). The APMCOTR (AAP-430) is responsible for the management of the VSCS contract and is the primary interface on technical contract matters between the FAA and the VSCS contractor. The Assistant Technical Officer (ATO) assists the APMCOTR with these responsibilities and represents the APMCOTR for the daily administration of the contract at the VSCS contractor's site. The Technical Onsite Representative (TOR) assists the APMCOTR at the site and regional level. The APMCOTR is provided and appointed by AAP-400. ATO's are provided and appointed by the APMCOTR, and TOR's are provided and appointed at the site and regional level.

h. Associate Program Manager for Contracting (APMC). The APMC (ASU-300) solicits, negotiates, awards, and administers contracts for the program manager. The APMC ensures that no contract, or change to a contract, is signed unless all applicable procedures have been met. The APMC responds to requests under the Freedom of Information Act related to contracts. The APMC is appointed by the Contracts Division, ASU-300.

i. Associate Program Manager for General Counsel (APMGC). The APMGC (AGC-500) provides legal services to the program manager, advises on legal issues, provides inputs to contractual documents to ensure clarity and proper legal defense, assesses legal risk, and advises on legal ramifications for alternative courses of action to accomplish program objectives. The APMGC represents the agency/program on legal issues with contractors and before various judicial tribunals. The APMGC is appointed by the Procurement Legal Division, AGC-500.

j. Associate Program Manager for Logistics (APML). The APML (ANS-400) is responsible for developing the FAA Integrated Logistics Support Plan (ILSP). The APML advises the program manager on all areas of the National Airspace Integrated Logistics Support (NAILS), and co-chairs the NAILS Management Team (NAILSMT) with the program manager. The APML works with other organizations to develop training requirements and plans. The APML is appointed by the NAILS Program Division, ANS-400.

k. Associate Program Manager for Air Traffic Procedures (APMP). The APMP (ATP-100) is responsible for ATC procedures for the transition to, and continuing operation of, the VSCS. The APMP is appointed by the AT Procedures Division, ATP-100.

l. Associate Program Manager for Quality (APMQ). In support of the program manager, the APMQ (ASU-400) provides onsite quality/reliability support at the VSCS contractor's and subcontractors' facilities and at operational sites through contract acceptance inspection (CAI). The APMQ is appointed by the Industrial Division, ASU-400, and delegated authority by the APMC (ASU-300).

m. Associate Program Manager for Air Traffic Requirements (APMR). The APMR (ATR-300) supports the program manager by providing input into the VSCS acquisition package to ensure that the VSCS acquisition meets AT requirements, training development, and supports OT&E. This includes identifying operational needs and developing NAS requirements that form the basis for system design and an evolving architecture through a seamless, global, AT management system. The APMR has responsibility in developing,

documenting, and refining or revising AT requirements (see subparagraph 52b). The APMR coordinates with the regional AT field activities to support the program manager including securing field personnel to support program activities. The APMR is appointed by the Advanced Systems and Facilities Division, ATR-300.

n. Associate Program Manager for Systems Engineering (APMSE). The APMSE (ASE-200) addresses system-level issues associated with VSCS project requirements and its interfaces with the other NAS subsystems. System engineering support encompasses the activities of the NAS System Engineering Service (ASE), the Operations Research Service (AOR), and the Facility System Engineering Service (AFE) as they affect or relate to VSCS. The APMSE is appointed by the NAS Communications System Engineering Division, ASE-200.

o. Associate Program Manager for Field Engineering Support (APMFES). The APMFES (AOS-500) addresses system software/ firmware support issues associated with VSCS development, testing and evaluation, implementation, and deployment. The APMFES is responsible for all second-level hardware and software support of operational facilities; and for approved and documented VSCS software/firmware, development of plans and procedures for testing activities, and the development and distribution of all VSCS certification and maintenance procedures. The software and configuration management (CM) responsibilities start at functional configuration audit (FCA)/physical configuration audit (PCA) of the first operational site (see chapter 8 for order of testing/acceptance). The hardware support starts after CAI at each site in the waterfall. Orders 1810.4B, FAA NAS Test and Evaluation Policy, and 1100.157, National Engineering Field Support Division Maintenance Program Procedures, clearly define AOS operational responsibilities. The APMFES is appointed by the National Automation Engineering Field Support Division, AOS-500.

p. Associate Program Manager for Systems Maintenance (APMSM). The APMSM (ASM-200) is responsible for maintenance procedures for the transition to, and continuing operation of, the VSCS. The APMSM provides onsite quality reliability, maintainability, availability (RMA) support at the operational sites throughout the life of VSCS, which includes overall management and direction of the FRDF program in accordance with Order 6030.45A. This includes identifying and developing NAS requirements that form the basis for system maintenance and an evolving architecture through a seamless, global, management system.

The APMSM coordinates with the regional AF field activities to support the VSCS program manager, including securing field personnel to support program activities. The APMSM is appointed by the Systems Maintenance Division, ASM-200.

q. Associate Program Manager for Test and Evaluation (APMT&E). The APMT&E's (ACN-200) roles and responsibilities are outlined in Order 1810.4B. The APMT&E has overall responsibility for VSCS testing and coordinates all test activities for the VSCS Program. The APMT&E is appointed by the Voice Switching Automation Division, ACN-200.

r. VSCS User Advisory Teams. Designated individuals of the VSCS user advisory teams are members of the VSCS matrix team who support the VSCS program manager. The function of the user advisory teams is to serve as a point-of-contact (POC) for regions and sites on VSCS Program matters and to facilitate two-way communications between the VSCS Program, the regions, and the facilities. Teams propose and evaluate requirement changes necessary to achieve operational suitability, evaluate planned or existing products, and develop necessary procedures for operation and support. Members were selected by their respective FAA headquarters division managers.

s. VSCS Regional Representatives. The VSCS regional representatives are not members of the VSCS matrix team, but they do support the VSCS program manager. The function of the regional representatives is to serve as a POC for AAP-400 on all VSCS Program matters and to facilitate two-way communications between the VSCS Program, AMC, ACT, the regions, and the facilities. Each region and the AMC is represented by an AT-Advanced Automation System Representative (AASR) and an AF Associate Program Manager representative.

t. VSCS Site Representatives.

(1) Assistant Manager for NAS Implementation (AMNI). At most facilities, the AMNI is an AT coordinator position located at each ARTCC who is responsible for the coordination of all NAS-related activities. The AMNI works for the AT management with coordination lines to AXX-512.

(2) Assistant Manager for Implementation (AMI). At most facilities, the AF coordinator is called the AMI who works for the AF sector, and has similar responsibilities as the AMNI.

NOTE: At some facilities, this position does not exist, is called the AF AMNI, or is combined with the AMNI position.

The standard AF lead for CIP activities is the NAS Onsite Coordinator (NASOC), who works directly for AXX-403. Those in the AMI position in the Northwest Mountain Region are referred to as the NASOC.

(3) Technical Onsite Representative (TOR). The region will assign a TOR and an alternate TOR to represent the VSCS Program Office during all phases of site installation/ implementation activities and coordinate the receipt, temporary storage, and security of the delivered VSCS equipment at the sites. He/she also manages VSCS property from CAI to ORD; functions as the liaison to Harris Corporation, the ARTCC AMNI or designee, AMI or designee, and NASOC; and functions as the onsite contact for the VSCS Program Office, the quality reliability officer (QRO), and the regional-to-contractor coordinator. The TOR shall identify site configuration changes that occur, including MAP Generation Updates, following the SAS and convey them to Harris via the program office. TOR's are required to complete the NAS Manager's (NASM) course and the Contracting Officer's Technical Representative (COTR) Contract Management course in preparation for their VSCS responsibilities. This training should be completed at least 4 months prior to VSCS delivery.

(4) Quality Reliability Officer (QRO). The QRO represents the VSCS Contracting Officer (CO) during all phases of the VSCS Program. The QRO shall assure that the contractor provides and maintains an inspection program acceptable to the Government covering the supplies and services under the VSCS contract. The contract specifications are used by the QRO to develop an audit checklist, which is coordinated with the COTR, for use at the sites. The QRO is responsible for evaluating the acceptability of contractor deliverables (i.e., hardware, software, firmware, documentation) by direct inspection, witnessing/monitoring of tests and/or evaluation of documentation and develop the CAI checklist (FAA Form 6030-19 can be used as an example to derive the CAI checklist). One is assigned at the Harris facilities and one will be assigned at each site. QRO duties and responsibilities are delineated in Order 4453.1B, Quality Assurance of Material Procured by FAA. The QRO will sign the FAA Form 256, Inspection Report of Materiel and/or Services, which accepts the VSCS on behalf of the Government after initial site testing (CAI), and initiates FAA Form 4500-1, Project Materiel Shipping Notice/Receiving Report, after CAI.

(5) VSCS Onsite Coordinator (OSC). An OSC will be assigned at each site to serve as the agency's onsite project manager during implementation of the VSCS. This is a dedicated, full-time F&E position (approved position descriptions are

available from the program office). This individual will have overall responsibility for the planning, engineering management and coordination of installation/integration of the VSCS into the ARTCC/ACF. This includes the development and execution of procedures to ensure the effective integration and accomplishment of the activities and functions of all organizations and individuals with VSCS onsite implementation responsibilities. Coordination and management activities include technical oversight and guidance of F&E personnel, operations personnel, equipment contractors, all transition and implementation contractors, other Government agencies, and service companies with VSCS involvement. The duration of the OSC's assignment will be approximately 3 years, beginning 18 months prior to system delivery and concluding after removal of the WECO 300.

NOTE: The OSC may be called upon to act as an interim TOR prior to the formal assignment of the permanent TOR.

(6) AF and AT Test Director. Each site will establish both an AF and AT test director for VSCS.

51. PROJECT CONTACTS. Appendix 4 lists personnel designated as POC's for their respective organizations.

52. PROJECT COORDINATION. The program manager and staff, AAP-400, are responsible for developing, coordinating, and accomplishing the total VSCS Program from the engineering and development cycle through the implementation cycle and maintenance support. Program directives enumerating functions to be accomplished by the supporting organizations are negotiated and signed by the supporting organization and the VSCS Program Manager as required. Organizational responsibilities in support of the VSCS Program include:

a. Office of the VSCS Program Manager for Advanced Automation (AAP).

(1) Provide program guidance and funding to all offices, services, centers, and regions on the implementation of VSCS.

(2) Prepare specifications and other documentation leading to contracts for VSCS prototypes and production units.

(3) Prepare/review test plans, requirements, and procedures; and monitors all testing.

(4) Provide technical surveillance of contractors in the design, development, production, testing, installation, and integration of the VSCS.

(5) Provide site preparation requirements for the regions, ACT, and AMC.

(6) Validate the VSCS baseline configuration for all hardware and software items. Provide suitable documentation to appropriate services to facilitate transition and turnover of the VSCS to the users.

(7) Ensure development of performance and certification standards (see subparagraph 92h). Cooperate in the development of qualification and classification standards for field maintenance personnel.

(8) Develop interface requirements. Provide system engineering and technical assistance support for local or national system problems.

(9) Work with the Maintenance Operations Division (ASM-200), Training Requirements Program (ATZ-100), and the Office of Higher Education and Training (AHT) to ensure that all training activities are initiated early enough to allow personnel to be qualified before participation in site operational use or system certification (see subparagraph 92h), and that training deliverables/training meet AF and AT training requirements.

(10) Provide support and participate in the DRR process.

b. Associate Administrator for Airway Facilities (AAF-1). AAF-1 will chair the DRR process and make the VSCS deployment decision in accordance with Order 1810.1F.

c. AT Plans and Requirements Service (ATR).

(1) Identify and document the operational requirements for the VSCS.

(2) Ensure operational requirements are met prior to field deployment.

(3) Identify and coordinate any changes in the CIP program that could affect deployment of the VSCS.

(4) Identify and document changes to operational requirements.

(5) Provide AT support for the Factory Acceptance Testing (FAT) and additional testing as required.

(6) Provide AT support for the OT&E at ACT.

(7) Provide support and participate in the DRR process.

d. AT Procedures (ATP).

(1) Identify and document the operational procedures and any revisions to operational procedures for the VSCS.

(2) Ensure operational procedures are met, developed, and tested prior to VSCS field deployment.

(3) Provide support for the FAT and additional testing as required.

(4) Provide support for the OT&E at ACT.

(5) Provide support and participate in the DRR process.

e. Systems Maintenance Service (ASM).

(1) Maintenance Engineering Division (ASM-100). Responsible for planning and monitoring the execution of the FAA maintenance policy to:

(a) Ensure required maintenance resources have been identified and action taken to procure support equipment and material not in the FAA inventory.

(b) Develop equipment certification policy (see subparagraph 92h).

(c) Manage the VSCS contract maintenance after the transfer from the VSCS Program Office.

(d) Provide support to the field for the FRDF program in accordance with Order 6030.45A.

(e) Provide support and participate in the DRR process.

(2) Maintenance Operations Division (ASM-200).

(a) Project the AF training requirements required to support the VSCS Maintenance Plan (CDRL - VP 54).

(b) Program operations funds for VSCS support.

(c) Prepare the Maintenance Requirements Document (MRD).

(d) Provide support and participate in the DRR process.

(3) Telecommunications Management and Operations (TM&O) Division (ASM-300).

(a) Provide coordination with regional TM&O organizations for the processing of required Telecommunications Service Requests (TSR).

(b) Support appropriate interface equipment between LINCS, MDS, and VSCS to meet 0/0 TLP and LINCS requirements prior to delivery of VSCS transition switch.

(c) Support the AAP-400 budget requirements for leased communications.

(d) Provide support and participate in the DRR process.

(e) Provide coordination with WECO 300 service contractor during VSCS implementation and transition.

(4) NAS Support (ASM-700).

(a) Provide industrial engineering support and production surveillance.

(b) Provide policy and procedural guidance to regional AF divisions and the AMC for appropriate VSCS property controls and records maintenance prior to CAI.

(c) Provide procedures for the disposal or utilization of surplus materials and equipment.

(d) Provide support and participate in the DRR process.

f. National Automation Engineering Field Support Division (AOS-500).

(1) Provide technical software/hardware support for resolution of local or national systems problems.

(2) Provide support for the FAT and independent FAA testing in the VSCS contractor's facility.

(3) Provide support for the OT&E at ACT.

(4) Jointly develop OT&E/system shakedown testing (SST) (see subparagraph 80c) requirements and procedures with AT Advanced Automation Systems Requirements (ATR-320) and support from regional AF and AT divisions.

(5) Review OT&E integration and operational test requirements, plans, and reports.

(6) Monitor development test and evaluation/production acceptance test and evaluation (DT&E/PAT&E) tests.

(7) Monitor and optionally participate in the conduct of the OT&E integration and operational tests.

(8) Conduct SST at ACT with ATR-320, as part of OT&E, supported by AF and AT field personnel.

(9) Develop system shakedown requirements, plans, and procedures to provide the basis for shakedown activities at the VSCS field sites (onsite shakedown), and support shakedown at all operational sites.

(10) With AMC, ensure that VSCS contractor plans and procedures are consistent with established FAA standards and procedures for depot-level maintenance at a central location.

(11) With ACN-200, organize the FAA staff for OT&E/SST training to operate and maintain the VSCS during OT&E and SST at ACT.

(12) Develop generic site testing plans and procedures to be used by the sites to develop their operational site testing plans.

(13) Approve VSCS software/firmware plans and procedures for testing activities.

(14) Approve OT&E/SST plans, procedures, and reports.

(15) Direct and conduct OT&E/SST as applicable to OT&E and SST requirements.

(16) Provide personnel for performing and/or monitoring the conduct of OT&E/SST.

(17) Analyze OT&E/SST data.

(18) Develop procedures for certification of the A/G component of the VSCS (see subparagraph 92h), issue procedures 3 months prior to the first VSCS delivery at an operational site, and support certification of the VSCS.

(19) Maintain the VSCS baseline configuration, as stated in Order 1320.48B, Engineering Field Support Sector Maintenance Program Procedures.

(20) Maintain automated CM-related data for VSCS site configuration data, approve change requests and implement approved changes through last site acceptance, which marks the transfer of the VSCS contractor's CM-related data to AOS-500's computer system(s).

(21) Develop and receive modifications to the baselined VSCS that are based on configuration control decisions (CCD) using either in-house resources or VSCS contractor support (see chapter 9), and prepare and distribute electronic equipment modifications (EEM) or site technical bulletins (STB).

(22) Conduct integration testing and evaluation (IT&E - operational site testing) with support from site personnel, En Route Field Support Branch (ATR-420), and ACN as requested.

(23) Develop plans that address system software/ firmware support issues associated with VSCS development, testing and evaluation, implementation, and deployment.

(24) Develop and provide field support for VSCS-developed software and issue procedures to ensure adequate regulation of this process.

(25) Test commercially available software (CAS) products released from the VSCS contractor for integration into the operational system and release to the field.

(26) Provide guidelines for maintenance, updates, and release of technical (hardware, software, firmware) documentation to the field sites during the operational life cycle of the VSCS.

(27) Review VSCS engineering and installation drawings with AMC and the regions, as appropriate.

(28) Generate and maintain appropriate VSCS handbooks.

(29) Chair/co-chair and support appropriate user teams as required.

(30) Provide support and a deployment recommendation to the DRR process.

g. NAS Communications System Engineering (ASE-200).

(1) Provide technical support for resolution of local or national systems problems.

(2) Support/develop system modifications.

(3) Support preparation, editing, printing, and distribution of documentation associated with modifications to the VSCS.

(4) Support the generation and maintenance of VSCS handbooks.

(5) Provide support for the FAT and independent FAA testing in the VSCS contractor's facility.

(6) Provide support for the OT&E at ACT.

(7) Validate the VSCS baseline configuration for all hardware and software items.

(8) Provide suitable documentation to appropriate services to facilitate transition and turnover of the VSCS to the users.

(9) Support the development of performance and certification standards (see subparagraph 92h). Cooperate in the development of qualification and classification standards for field maintenance personnel.

(10) Support the development of interface requirements. Provide system engineering and technical assistance support for local or national system problems.

(11) Identify and coordinate any changes in the ACF program that could affect deployment of the VSCS.

(12) Provide support and participate in the DRR process.

h. Contracting Officer (CO) (ASU-300). ASU-300 provides contractual support for all phases of the VSCS Program. These activities include, but are not limited to:

(1) Overall contract administration at FAA headquarters and VSCS contractors' facility including guidance and direction to the COTR.

(2) Process of all procurement actions necessary to enter into contract(s) for the acquisition of VSCS and related items.

(3) Designation of site technical representatives.

(4) Coordination of visitor clearances for contractors with regional Civil Aviation Security Division.

(5) Designation and guidance of the QRO (supplied by ASU-400).

(6) Issuance of delivery orders.

(7) Performs all negotiations and resolution of disputes with the VSCS contractor.

(8) Modifications of the contract.

(9) Authorization of payments.

(10) Assures that all DOT and FAA regulations and directives are met.

(11) Providing support and participating in the DRR process.

i. Industrial Division (ASU-400). ASU-400 is the matrix organization responsible for assuring that the contractor complies with all requirements of the VSCS contract. It will be the responsibility of ASU-400 to assign the QRO.

(1) Provide an in-plant QRO to assure adequacy of the quality programs and inspection systems required to administer the contract at the contractor's/subcontractor's facilities and operational sites through CAI.

(2) Provide support and participate in the DRR process.

j. Office of Higher Education and Training (AHT).

(1) Analyze training requirements, approve training program development, assign training responsibility, and review and approve all associated VSCS training schedules, assignments, and programs.

(2) Coordinate, as required, the training program for the VSCS.

(3) Instruct and advise the regions on training programs, schedules, and assignments.

(4) Provide support and participate in the DRR process.

k. NAS Transition and Implementation Service (ANS).

(1) Facility Programs and Transition Division (ANS-200).

(a) Provide the facility improvement design and coordinate the design with the regions. The improvements include the facility modernization packages and the VSCS power distribution design.

(b) Provide oversight and guidance in facility transition.

(c) Provide support and participate in the DRR process.

(2) NAILS Program Division (ANS-400).

(a) Ensure all applicable NAILS requirements are identified, managed, and integrated into the VSCS project to provide total life-cycle support.

(b) Provide policy and procedural guidance in the NAILS area of supply support and provisioning and develop the maintenance management plan (MMP).

(c) Provide support and participate in the DRR process.

l. FAA Technical Center (ACT).

(1) Establish a communications laboratory with an environment suitable for development, test, and evaluation of VSCS position equipment in accordance with the VSCS Program Master Plan.

(2) Provide engineering support through system implementation.

(3) Conduct IT&E (see subparagraph 80b) of the VSCS.

(4) Coordinate all test efforts in the VSCS Program.

(5) Conduct OT&E and SST at ACT.

(6) Provide a recommendation, based on test results in support of the DRR process, to determine whether to deploy the VSCS.

m. Engineering Test and Evaluation Service (ACN).

(1) Identify and document the test and evaluation requirements and procedures for the VSCS.

(2) Ensure operational suitability and usability of the VSCS in the NAS environment and that requirements are met prior to field deployment.

(3) Manage and coordinate FAA participation in all VSCS contractor-performed test activities to ensure contractor compliance with the VSCS Product Specification.

(4) Coordinate all test efforts in the VSCS Program.

(5) Identify and document changes to test and evaluation requirements/procedures.

(6) Provide support for the Factory Acceptance Testing (FAT) and additional testing as required.

(7) Provide support for the OT&E at ACT.

(8) Support SST and site system shakedown plans and procedures.

(9) Support OT&E/SST and site system shakedown.

(10) Support FAA IT&E at all operational sites.

(11) Jointly develop facility criteria for IOC and the ORD.

(12) Provide support and participate in the DRR process.

n. Mike Monroney Aeronautical Center (AMC).

(1) FAA Academy (AMA-1).

(a) Define VSCS training facility requirements and advise the Training Program Divisions, AHT-400, and AAP-400 of the AMC requirements to support the VSCS Program.

(b) Assist in the development and conduct of training programs as assigned by the Office of Personnel and Training. Provide material to familiarize personnel, who will use the VSCS equipment, with various controls and characteristics of the system as they apply to facility performance.

(c) Implement training to support the VSCS Program. This involves the evaluation and acceptance of VSCS contractor-developed and conducted training.

(d) Provide support and participate in the DRR process.

(2) FAA Logistics Center (AML-1).

(a) Provide logistics support service planning for the VSCS. Accomplish cataloging, provisioning, and depot-level maintenance to support operational sites for the VSCS.

(b) Provide depot-level maintenance for VSCS to ensure adequate numbers of serviceable line replaceable units (LRU) are available for supply support.

(c) Attend provisioning conferences for the VSCS Program.

(d) Make recommendations in conjunction with ASU and AOS regarding logistics policies and plans for support of VSCS.

(e) Participate in planning activities for the transition of the system equipment into the logistics inventory.

(f) Establish facilities and item management control and accountability for all agency property received at the AMC.

(g) Provide support and participate in the DRR process.

o. Regional AF Divisions and Sectors.

(1) Provide coordination, direction, and guidance necessary for accomplishment of all phases of the VSCS project through assumption of maintenance by the region.

(2) Accomplish site preparation.

(3) Initiate TSR's, as required, to accomplish required TELCO work associated with site preparation and cutover.

(4) Provide AF support for the FAT and independent FAA testing at the factory.

(5) Provide AF support for the OT&E at ACT.

(6) Witness system testing in accordance with VSCS Test Plan (CDRL - VP 74) requirements.

(7) Accomplish preliminary contractual acceptance of those items delivered to appropriate facilities as directed by the CO.

(8) Perform other responsibilities as described in Order 6030.45A.

(9) Jointly with AT, develop facility criteria for IOC and the ORD.

(10) Jointly with AT, declare IOC and the operational readiness date.

(11) Participate in the final joint acceptance inspection (JAI) in accordance with Order 6030.45A.

(12) Provide support to assist in meetings, training, and testing.

(13) Support the DRR process as defined in Order 1800.63, NAS DRR Program.

p. Regional AT Divisions and Facilities.

(1) Participate in VSCS implementation planning.

(2) Identify and document site-specific VSCS operational requirements.

(3) Provide input for operational configuration of VSCS in M-1 consoles.

(4) Develop plans for maintaining configuration maps.

(5) Provide feedback from facilities to appropriate FAA regional and headquarters divisions.

(6) Support the FAT and independent FAA testing in the factory.

(7) Support testing at ACT.

(8) Provide changes in operational requirements to ATR-300.

(9) Develop site-specific operational transition plans.

(10) Provide VSCS contractor with configuration map.

(11) Jointly with AF, develop facility criteria for IOC and the ORD.

(12) Jointly with AF, declare IOC and the operational readiness date.

(13) Participate in the final JAI in accordance with Order 6030.45A.

(14) Ensure that VSCS training is acceptable and accomplished in a timely manner.

(15) Conduct VSCS onsite training for controllers, supervisors, and staff.

(16) Perform other responsibilities as described in Order 6030.45A.

(17) Provide adequate staffing to backup control room personnel in training.

(18) Support the DRR process as defined in Order 1800.63.

53. PROJECT RESPONSIBILITY TABLE. The onsite VSCS support responsibility matrix establishes organizational responsibilities for VSCS activities conducted at the operational sites beginning with site preparation and continuing through to the commissioned VSCS. The onsite VSCS support responsibility matrix is provided in appendix 5.

54. PROJECT MANAGERIAL COMMUNICATIONS.

a. Meetings. Figure 5-1 provides the VSCS field user team structure. The following subparagraphs describe the functionality of each of the user teams:

(1) VSCS Implementation Management Team (VIMT). The VIMT meets, as required, to manage the involvement of the field user teams in VSCS site implementation/transition issues. This team is co-chaired by AAP-420 and ATR-320. The team has members from AAP, ACN, ANS, AOS, ATR, and the chairperson of the AF VSCS Implementation Team.

(2) AF VSCS Transition Switch Team. The AF VSCS Transition Switch Team has been combined with the AF VSCS Implementation Team.

(3) AT AAS/VSCS Implementation Team (ATAVIT). The ATAVIT meets quarterly to address AT issues at the facility level that impact all phases of the AAS/VSCS site implementation. This team is chaired by ATR-320 with members from AAP, ANS, ATR, and AT field representatives.

(4) AF VSCS Implementation Team (AFVIT). The AFVIT meets quarterly to address AF issues at the facility level that might impact all phases of the VSCS site implementation. This team is chaired by a member of the Northwest Mountain Region Program Management Staff, ANM-414, with members from AAP, AOS, ASM, and AF field representatives. ANS and ASE are invited to participate as required.

(5) VSCS Test Management Team (VTMT). The VTMT meets, as required, to manage the VSCS test program to ensure that the overall VSCS mission goals are verified and ensure that all test activities are conducted in accordance with agency orders. This team is chaired by ACN-200 with members from AAP, AOS, ASE, ATR, ATQ, and ASU.

FIGURE 5-1. VSCS FIELD USER TEAMS

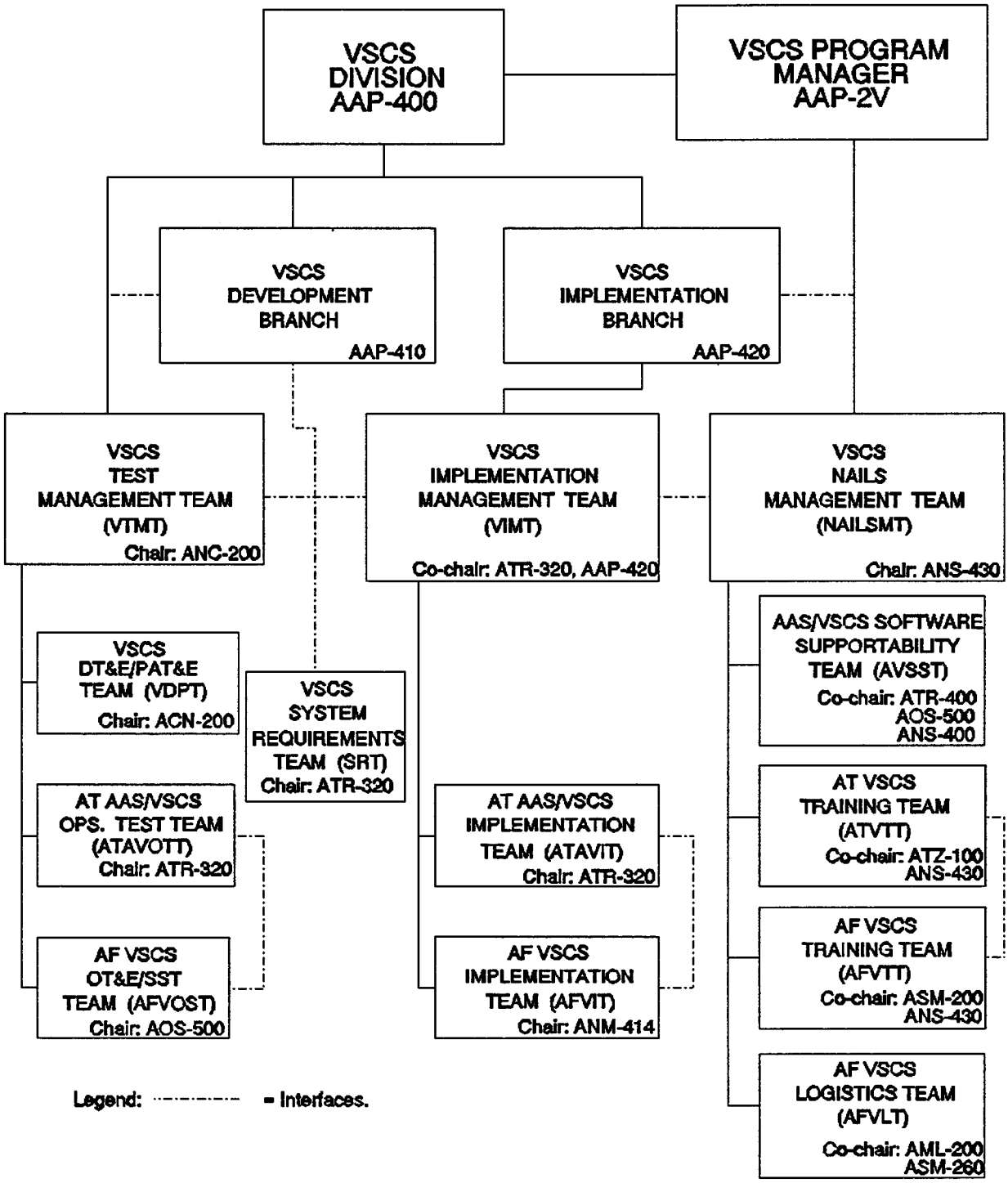

(6) VSCS Development Test and Evaluation/Production Acceptance Test and Evaluation (DT&E/PAT&E) Team (VDPT). The VDPT (see subparagraphs 80a and 80d) meets, as required, to manage and coordinate FAA participation in all VSCS contractor-performed test activities to ensure contractor compliance with the VSCS Product Specification. This team is chaired by ACN-200 with members from AAP, ATR, and AT/AF field representatives.

(7) AT AAS/VSCS Operational Test and Evaluation Team (ATAVOTT). The ATAVOTT meets, as required, to support the management and coordination of FAA NAS OT&E/IT&E activities to ensure VSCS compliance with NAS System Specification, NAS-SS-1000, and user defined operational requirements. This team is chaired by ATR-320 with members from AAP, ACN, AOS, ASM, and AT field representatives.

(8) AF VSCS Operational Test and Evaluation/System Shakedown Testing (OT&E/SST) (AFVOST). The AFVOST meets, as required, to manage and coordinate the development and performance of FAA NAS OT&E/SST activities to ensure the operational suitability and useability of the VSCS in the NAS environment. This team is chaired by AOS-500 with members from AAP, ACN, ANS, AOS, ASM, and AF field representatives.

(9) VSCS NAILS Management Team (NAILSMT). The VSCS NAILSMT meets semi-annually to review and evaluate VSCS contractor compliance in meeting integrated logistics support (ILS) requirements for transition to VSCS. This team is chaired by ANS-430 with members from AAP, AOS, ATR, ASE, ACN, AHT, ATZ, AML, ASM, AMA, and AT/AF representatives from the Northwest Mountain Region.

(10) AAS/VSCS Software Supportability Team (AVSST). The AVSST meets quarterly to oversee and manage software maintenance and integrate FAA efforts for software maintenance. This team is co-chaired by ANS-400, ATR-400, and AOS-500, with members from AAP, ACN, ASM, ATR, and field AT/AF representatives from the Assistant Manager for Automation (AMA) and the Assistant Manager for System Performance (AMSP) staffs.

(11) AT VSCS Training Team (ATVTT). The ATVTT meets quarterly to address AT training issues and to oversee the delivery of training for testing and deployment. This team is co-chaired by ANS-430 and ATZ-100 with members from AAP, ACN, AMA, ATZ, AHT, National AT Controllers Association (NATCA), and AT field representatives.

(12) AF VSCS Training Team (AFVTT). The AFVTT meets quarterly to address AF training issues and to oversee the delivery of training for testing and deployment. This team is co-chaired by ANS-430 and ASM-200 with members from AAP, ACN, AHT, AMA, AOS, and AF field representatives.

(13) AF VSCS Logistics Team (AFVLT). The AFVLT meets quarterly to oversee and manage logistics for VSCS, including supply support, provisioning, cataloging, maintenance, test equipment, maintenance facilities, packaging, and transportation. This team is co-chaired by AML-200, ASM-260, and an AF field representative with members from ANS, AAP, AOS, ASM, and AF field representatives.

(14) VSCS System Requirements Team (SRT). The SRT meets every 6 to 8 weeks to identify and resolve requirement issues and evaluate system design from an operational perspective. The SRT is chaired by ATR-320 with members from AAP and AT ARTCC/TRACON personnel.

(15) AAP Regional Representatives. The AAP regional representatives meet semi-annually to provide a forum to coordinate the transition planning and implementation phases of AAS/VSCS with the regions. Each region has designated an AT regional representative and an AF Regional Associate Program Manager (RAPM). The regional representatives' meetings are co-chaired by AAP-240, AAP-420, and ATR-320 with members from ACN, ANS, AOS, AML, ASM, and AF/AT field representatives.

b. VSCS Program Information System. The VSCS Program Office provides a means for disseminating VSCS Program information from the FAA headquarters program office and FAA System Engineering and Technical Assistance (SETA) contractor team to Harris Corporation and FAA field representatives through electronic media. It also serves as an information exchange between FAA field representatives, Harris Corporation, and VSCS Program Office personnel (see appendix 6). The following paragraphs provide a brief description of the VSCS Program Information System and the information it provides:

(1) VSCS Program Information System Configuration Description. The VSCS Program Information System is resident on the program office AAP-Local Area Network (LAN). CC-Mail is the electronic mail software application used to support VSCS Program information flow. The information system consists of CC-Mail messaging capabilities and a VSCS Bulletin Board (BBS) established through the CC-Mail electronic mail software application.

(a) CC-Mail. The program office (through AAP-10) has established CC-Mail connectivity with the regions and ARTCC's through use of the CC-Mail Gateway System. This enables a user on a LAN to communicate with other users on geographically separated LAN's by using the CC-Mail application. LAN USERID address listings and CC-Mail messages are propagated throughout the Gateway System. A user can then send messages to other users on remote LAN's as if they were local users on their system. Messages can be sent to individual users or multiple users with ease. DOS files can be attached to CC-Mail messages to facilitate use by message recipients. WordPerfect 5.1 is the preferred format of the DOS files. More information is available in the CC-Mail User's Guide provided by your host CC-Mail Administrator.

(b) BBS. A bulletin board has been established by AAP-10 on the AAP-LAN for VSCS Program information. The BBS is primarily used for passing information on the VSCS Program that is of general interest to all VSCS Program participants. The CC-Mail Gateway System provides access to the BBS. In order for field sites to access the BBS, it must be established on their individual LAN's within the CC-Mail application. Once the BBS has been established, any message added to their BBS is automatically propagated to all BBS's throughout the CC-Mail Gateway System. With the exception of CC-Mail messages, most BBS messages are read files available in WordPerfect 5.1 format. However, any DOS file can be attached to a CC-Mail message, (e.g., a Microsoft Project file).

(2) VSCS Program Information System Access. The system is accessible by field personnel either through the CC-Mail Gateway System that connects the VSCS Program Office and field representatives, or by remote users through PC/modem telecommunications links with the Novell Network Access Server. Program Office personnel have access to this system through their AAP-LAN.

(a) CC-Mail. Access for individual users can be obtained through their respective host CC-Mail Administrators. The user must have a valid USERID and password setup on the host CC-Mail LAN. Follow local procedures for establishing user access.

(b) Remote User Access. OnLAN/PC telecommunications software for remote users with PC/modems is available for those personnel that do not have access to CC-Mail. This OnLAN/PC telecommunications software application is provided by your local CC-Mail Administrator for remote communications. The Novell Network Access communications server allows for

asynchronous connections with the host LAN. Once connected, remote users function essentially as a node on the LAN. After logging in, the remote user is presented with a "REMOTE ACCESS MENU" established by your host administrator. All remote users may access items on this menu. The BBS is available through the CC-Mail menu option when using remote user access software. To print any file remotely, refer to the OnLAN/PC User's Guide. Downloading the file to read later or printing the file remotely, rather than trying to read the file online is highly recommended. These are standard options available to all remote users and are covered in the OnLAN/PC User's Guide.

(c) Remote AAP-LAN User Access. If remote access is required for the AAP-LAN, the CC-Mail Administrator at the region/ARTCC can assist in gaining approval. Remote users gain access by processing an AAP-10 Remote Access Request form through AAP-420 to AAP-10 to obtain a USERID and password. A username will be assigned upon approval by AAP-10 and AAP-420 personnel. Passwords are all the same initially for all accounts - "hello." CC-Mail ID's are the same as username login. The CC-Mail password is initially null for first-time access. When you access CC-Mail for the first time, you will be prompted to enter a new password and re-enter the new password a second time for confirmation. Both of the passwords for Remote User Access to the AAP-LAN and CC-Mail can and should be changed by the user on a regular basis. Refer to the OnLAN/PC User's Guide for more information. An OnLAN/PC User's Guide is provided along with the PC telecommunications software application by your CC-Mail Administrator when an AAP-10 Remote Access Request form has been received from a remote user, processed and approved by AAP-10/AAP-420.

55. IMPLEMENTATION STAFFING. Table 5-3 represents AAP-420 implementation staffing.

56. PLANNING AND REPORTS.

a. VSCS Project Implementation Plan (PIP). The VSCS PIP provides technical guidance and management direction for the orderly implementation of the VSCS. The guidance contained in the PIP assists in the preparation of more site specific documents such as the Site Implementation Plan (SIP). The PIP was prepared and is maintained by AAP-420.

b. VSCS Contract Management Plan (CMP). The CMP provides guidance and direction to the FAA and support contractors for the administration of the VSCS Program during its production phase, as required by Order 1810.1F. It defines AAP-400's organizational structure and relationships and the Technical

TABLE 5-3. AAP-420 IMPLEMENTATION STAFF

**AAP-420**
**VSCS IMPLEMENTATION ENGINEERING MANAGER**
**Joseph Morelli (202) 376-6534**

**SITE IMPLEMENTATION PLANNING**
**Bill Boyer (202) 376-6599**

- **Site Surveys Procedures**
- PIP/Updates
- Facility Requirements & Analysis
- **Site Configuration Management**
- **Site Preparation Coordination with Regions**
- AFVIT/User Team Support
- ACT Installation Planning
- DRR Support
- **Implementation CDRL Review**
- Implementation NCP/CCP/RFA/DCR
- Field Support
- Testing Support
- Requirements Support
- **Funding Support (Regions Sites)**
- VSCS/NAS Schedule Integration Tracking
- **Installation Requirements**
- **MAP Generation**
- Database Management
- **Facility Power**
- **VDF/RI IDF Implementation**
- VSCS/NAS Interdependencies Analysis & Tracking

**SITE TRANSITION**
**Del Breland (202) 376-6597**

- **Site Acceptance Test Support**
- **DRR Support**
- VSCS/NAS Schedule Dependency
- Physical Security
- **Site Transition Activities**
  - **Delivery & Installation Activities**
  - **Transition Switch**
  - **IDF Installation & Site Preparation**
  - **M1 Console Modifications**
  - **Power System Modifications**
  - **DYSIM Modifications**
  - **M1/ISSS Transition**
- **Transition CDRL Review**
- **Site Surveys**
- Removal of GFE/CFE
- VCET Support
- CC Mail Support
- **Field Support**
- E-Complex
- **Site MAPs**

**LOGISTICS/MAINTENANCE**
**Alan Sussman (202) 376-6589**

- Provisioning/Support Equipment
- Supply Support (Depot & Intermediate)
- Maintenance Planning/Support
- Failure Reporting
- Site Maintenance Documentation
- **Site Installation Drawings**
- DRR Coordination
- **CDRL Review**
- Computer Resources Support
- NAILSMT Support
  - AFVLT
- PPHS&T (Preservation, Packaging, Handling, Storage & Transportation)
- **Technical Data/Software Support**
- Logistics Planning/Coordination
- Life Cycle Costs/Parts Control Program
- Automated Document Development and Maintenance (ADDM)
- VSF Design, Planning, Resolution
- FCA/PCA
- Trade-off/Design/Analysis
- **Configuration Management Coordination**
- Supportability Assessment
- Production Support
- **System Certification**

**TRAINING**
**Tom Buschbaum (202) 376-6596**

- **Training Implementation**
- Training Requirements Analysis
- **Training Schedules**
- Training Materials Development & Validation
- NAS Training Coordination
- NAILS
  - AFVTT
  - ATVTT
- **VCET Lead**
- DDF Mockups/Ancillary Position
- **Site Surveys Support**
- COTR Phoenix
- AMC Site Lead

Specialty Teams' (TST) functions. It also sets policy and direction for transacting business with the VSCS contractor, Harris Corporation.

c. VSCS Integrated Logistics Support Plan (ILSP). The ILSP describes the ILS planned for the VSCS throughout its lifecycle. Included in the ILSP are responsibilities, a management matrix, maintenance requirements, and a description of the NAILS program support elements. The ILSP is designed to work in conjunction with the MMP. The ILSP was developed and is maintained by ANS-430.

d. VSCS Subsystem Training Plan. This plan summarizes the initial training required to commission the VSCS. All training requirements, including prerequisite courses, are identified. The subsystem training plan was developed and is maintained jointly by ANS-430 and AAP-420.

e. VSCS Operational Transition Plan. The VSCS Operational Transition Plan provides guidance to facility management for conduct of an orderly transition from IOC to ORD. The plan was developed by a subgroup of the VSCS regional representatives (AT and AF) and was included in this order as paragraph 87. It is maintained by ATR-320.

f. VSCS Transition Switch Implementation Support Plan. This plan identifies AF tasks and responsibilities associated with the phases of VSCS transition. The plan was developed and is maintained by AAP-400.

g. Transition Plan (CDRL - VP 16). This plan was developed by the VSCS contractor 4 months after contract award and describes the VSCS contractor's methodology to transition from the existing equipment to the VSCS.

h. Site Preparation Design Information Plan (SPDIP - CDRL - VP 14). The SPDIP was developed by the VSCS contractor 3 months after VSCS contract award. This generic plan identifies, to the Government, specific technical requirements upon which facilities' site preparation design is predicated.

i. SAP (CDRL - VP 13). This site-specific plan is developed by the VSCS contractor and submitted to the Government 12 months prior to VSCS equipment delivery. It defines the Government and VSCS contractor requirements and responsibilities for coordinating the deployment, installation, initial checkout, test, and integration of the VSCS at specific sites; and contains detailed site installation drawings. A separate CDRL - VP 13 is developed for each site.

j. Maintenance Management Plan (MMP). The VSCS MMP documents the maintenance concepts, establishes the scope of maintenance services to be provided, and describes the responsibilities of the VSCS contractor and the FAA for ensuring timely and consistent support in accordance with approved NAILS policies. The baseline for the MMP comes from the MRD. Although the MMP is a stand-alone document, it is tailored to work in conjunction with the ILSP. The MMP is developed by ANS-400.

k. Site Readiness Review Report (CDRL - VP 15). This report is a site-specific report developed by the VSCS contractor and submitted 30 days after the site readiness survey. This report documents the findings of the site readiness survey and describes the new and remaining site deficiencies that need to be corrected prior to system delivery. This report becomes final with VSCS equipment delivery.

l. Map Generation Report (CDRL - VP 26). The map report provides a site-by-site documentation of all maps defining the functional capabilities and communications assignments for A/G and G/G communications for each operational position. A draft report was submitted at VSCS contract award. The draft report is developed by the VSCS contractor 12 months prior to VSCS equipment delivery. The final report is due at VSCS equipment delivery. The map Generation Report will be revised with PPI delivery.

m. Site Installation Drawings (CDRL VP 69 and VP 69A). Site drawings are delivered by the VSCS contractor 45 days after ORD at each site to the region. The drawings provide details of how the VSCS was installed at that site.

n. Field Status Notice. Field reporting procedures are required to keep VSCS Program participants in FAA headquarters, regions/facilities, ACT, and AML aware of ongoing activities at the installation sites. The status notices provide timely, useful, and factual implementation status. More information on field status is provided in appendix 6.

o. VSCS Site Configuration Policy - ATR-320. Provides policy for initial equipment and data base (map) configurations of the VSCS. It contains AT policy only. It describes the VSCS equipment provided, configuration map data base policy, defines DEO map configuration data base policy, contains direct access labeling conventions, and contains the background and rationale used to develop the policies contained therein.

57. APPLICABLE DOCUMENTS. The following documents are quoted for reference, and the current versions of these documents are applicable to the implementation of the VSCS:

NOTE: CDRL's listed do not represent all of the VSCS CDRL's. For a complete list of all CDRL's, consult the VSCS Contract.

a. CDRL's.

(1) American Society for Testing and Materials (ASTM)-D3951-82, Standard Practice for Commercial Packaging.

(2) CDRL - VP 13, VSCS SAP.

(3) CDRL - VP 14, VSCS SPDIP.

(4) CDRL - VP 15, VSCS Site Readiness Review Report.

(5) CDRL - VP 16, VSCS Transition Plan.

(6) CDRL - VP 23, VSCS Electromagnetic Interference Control Plan.

(7) CDRL - VP 24, VSCS RMA Program Plan.

(8) CDRL - VP 26, VSCS Map Generation Report.

(9) CDRL - VP 27, VSCS Version Description Document.

(10) CDRL - VP 28, VSCS Failure Reporting Analysis and Corrective Action System (FRACAS).

(11) CDRL - VP 31, VSCS Software Product Specification.

(12) CDRL - VP 41, VSCS Interface Control Document (ICD).

(13) CDRL - VP 44, VSCS Hardware Product Specification.

(14) CDRL - VP 47, VSCS Depot Maintenance Study.

(15) CDRL - VP 49, VSCS Logistic Support Analysis Plan (LSAP).

(16) CDRL - VP 50, VSCS (LSA) Incremental Delivery.

(17) CDRL - VP 54, VSCS Maintenance Plan.

(18) CDRL - VP 67, VSCS Computer System Diagnostic Manual.

(19) CDRL - VP 68, VSCS Computer System Operator's Manual.

(20) CDRL - VP 69 and VP 69A, VSCS Site Installation Drawings.

(21) CDRL - VP 71, VSCS Commercial Hardware Manuals.

(22) CDRL - VP 72, VSCS Commercial Hardware Technical Manuals and Publications.

(23) CDRL - VP 73, Contractor's Master Test Plan (MTP).

(24) CDRL - VP 74, VSCS Test Plan.

(25) CDRL - VP 75, VSCS Test Procedures.

(26) CDRL - VP 76, VSCS ACT/Site Test Reports.

(27) CDRL - VPs 77-79, VSCS Test Reports (Proto-type Upgrade).

(28) CDRL - VP 80, VSCS Job Task Analysis.

(29) CDRL - VP 81, VSCS Contract Training Plan.

(30) CDRL - VP 82, VSCS OT&E/SST Curriculum Materials.

(31) CDRL - VP 83, VSCS Curriculum Materials (Design, Development and Validation).

(32) CDRL - VP 84, VSCS System Certification Parameters.

(33) CDRL - VP 86, VSCS Software Standards and Procedures Manual.

(34) CDRL - VP 87, VSCS Software User's Manual.

(35) CDRL - VP 88, VSCS Software Programmer's Manual.

(36) CDRL - VP 89, VSCS Software Test Description.

(37) CDRL - VP 90, VSCS Software Test Procedure.

(38) CDRL - VP 91, VSCS Software Independent Test Plans and Procedures.

b. Department of Defense (DoD) Documents.

(1) DOD Manual 4100.38m, Provisioning and Other Preprocurement Screening Manual.

(2) DOD Manual 4100.39m, Defense Logistics Information System Procedures.

(3) DOD Manual 4130.2m, Federal Catalog, System Policy Manual.

(4) DOD-STD-480A, Configuration Control of Engineering Changes, Deviations, and Waivers.

(5) DOD-STD-2167A, Defense System Software Development.

(6) DOD-STD-2168, Defense System Software Quality Program.

(7) MIL-STD-129, Marking For Shipment and Storage.

(8) MIL-STD-461C, Electromagnetic Emission and Susceptibility Requirements for the Control of Electromagnetic Interference.

(9) MIL-STD-462, Electromagnetic Interferences Characteristics, Measurements of Requirements for Equipment, and interim notice 4.

(10) MIL-STD-483, Configuration Management Practices for Systems, Equipment, Communications, and Computer Programs.

(11) MIL-STD-785, Reliability Program for Systems and Requirements Development and Production.

(12) MIL-STD-1189, Standard Symbology For Marking Unit Packages and Other Containers.

(13) MIL-STD-1388.2B, Requirements For a Logistics Support Analysis Record.

(14) MIL-STD-1521B, Technical Reviews and Audits for Systems, Equipment, and Computer Software.

(15) MIL-STD-1561, Provisioning Procedures, Uniform DOD.

(16) MIL-E-17555, Electronic and Electrical Equipment, Accessories, and Repair Parts.

c. FAA Standards.

(1) FAA-C-1217D, Electrical Work, Interior.

(2) FAA-E-2731F, VSCS Product Specification, with addendums 1 and 2.

(3) FAA-G-1210D, Provisioning Technical Documentation.

(4) FAA-G-1375, Spare Parts - Peculiar For Electronic, Electrical, and Mechanical Parts.

(5) FAA-G-2100, Electronic Equipment, General Requirements.

(6) FAA-STD-005, Preparing Specification Documentation.

(7) FAA-STD-013, Quality Control Program Requirements.

(8) FAA-STD-016A, Quality Control System Requirements.

(9) FAA-STD-018A, Computer Software Quality Program Requirements.

(10) FAA-STD-019A, Lightning Protection, Grounding, Bonding, and Shielding Requirements of the Facility.

(11) FAA-STD-020A, Transient Protection, Grounding Bonding, and Shielding Requirements for Equipment.

(12) FAA-STD-021, Configuration Management (CM), (Contractor Requirements).

(13) FAA-STD-025B, IRD/ICD Preparation.

(14) FAA-STD-026, NAS Software Development.

(15) FAA-STD-028, Standard Contract Training Programs.

(16) FAA-STD-032, Design Standards for NAS Physical Facilities.

(17) FAA-STD-036, Preparation of PIP's.

(18) FAA-STD-2100E, Electronic Equipment, General Requirements.

d. NAS Documents.

(1) NAS-DD-1000D, NAS Design Document.

(2) NAS-MD-110, Test and Evaluation (T&E) Terms and Definitions for the NAS.

(3) NAS-MD-001, NAS Configuration Management Document, Subsystem Baseline Configuration, and Documentation Listing.

(4) NAS-SR-1000, NAS System Requirements Specification.

(5) NAS-SS-1000, NAS System Specification.

(6) NAS-IC-21024201, Part I, VSCS-ACCC-ICD.

(7) NAS-IC-21024201, Part II, VSCS-ACCC-ICD.

(8) NAS-IC-80104201, ICD, VSCS to AC Power Supply.

(9) NAS-IR-2102000, Local Communications Network (LCN)/User System.

(10) NAS-IR-21014201, Part I, VSCS to ACCC IRD.

(11) NAS-IR-21014201, Part II, VSCS/ACCC IRD - VCE to Common Console.

(12) NAS-IR-42004101, VSCS-NMCE IRD.

(13) NAS-IR-42004205, Voice Switch/Recording Equipment IRD.

(14) NAS-IR-42009404, Voice Switch-PABX IRD.

(15) NAS-IR-42014202, VSCS-Tower Communications System (TCS) Interphone Interface IRD.

(16) NAS-IR-44010002, Transmission Equipment: Analog Interface IRD.

(17) NAS-IR-51034201, VSCS-MPS IRD.

(18) NAS-IR-61004201, Rev:A, FAA IRD, ACF to VSCS.

(19) NAS-IR-64024201, VSCS BUEC IRD.

(20) NAS-IR-80104201 Rev:A, VSCS AC Power Supply IRD.

(21) NAS-IR-92020000, CTS-User Systems IRD.

(22) The FAA Telecommunications Strategic Plan.

e. FAA Orders.

(1) Order 1000.1, Policy Statement of the Federal Aviation Administration.

(2) Order 1100.134A, Maintenance of National Airspace System Automation Subsystems (HDR's and PTR's).

(3) Order 1100.145B, Program Technical Report (PTR) Procedures.

(4) Order 1100.157, National Engineering Field Support Division Maintenance Program Procedures.

(5) Order 1320.48B, Engineering Field Support Sector Maintenance Program Procedures.

(6) Order 1350.14, Records Management.

(7) Order 1600.46, Physical Security Review of New Facilities, Office Space, or Operating Areas.

(8) Order 1600.54B, FAA Automated Information Systems Security Handbook.

(9) Order 1650.7B, Civil Aviation Security Program Guideline.

(10) Order 1800.8F, National Airspace System Configuration Management.

(11) Order 1800.57, Establishment of the National Airspace System Configuration Control Board (CCB).

(12) Order 1800.58, National Airspace System Integrated Logistics Support (NAILS) Policy.

(13) Order 1800.63, National Airspace System Deployment Readiness Review (DRR) Program.

(14) Order 1810.1F, Acquisition Policy.

(15) Order 1810.2, Independent Operational Test and Evaluation (OT&E) for Major Systems Acquisition.

(16) Order 1810.4B, FAA NAS Test and Evaluation Policy.

(17) Order 1830.2B, Telecommunications Standards Selection and Implementation Policy.

(18) Order 1830.3A, Telecommunications Management and Operations Policy.

(19) Order 3400.3F, Airway Facilities Maintenance Personnel Certification Program.

(20) Order 3900.19, Occupational Safety and Health.

(21) Order 3910.3, Radiation Health Hazard and Protection.

(22) Order 4250.13, Supply Support for Field Evaluation of Engineering Development Programs.

(23) Order 4400.60, Implementation of the NAS Standardization Program and Use of Priced Options for Production Contracts.

(24) Order 4420.4, Space Acquisition.

(25) Order 4441.9, Practices Concerning Leased Telecommunications Service.

(26) Order 4453.1B, Quality Assurance of Material Procured by FAA.

(27) Order 4453.2B, FAA Quality Control System Certification Program.

(28) Order 4560.1B, Policies and Procedures Covering the Provisioning Process During Acquisition of FAA Materiel.

(29) Order 4630.8, Quality Assurance Policy.

(30) Order 4630.9, FAA Computer Software Quality Program Requirements.

(31) Order 4650.7A, Management of NAS F&E Materiel.

(32) Order 4650.20, Reporting and Replacement of Items Failing Under Warranty.

(33) Order 4650.21, Management and Control of In-Use Personal Property.

(34) Order 4650.22D, Vendor Shipments of Nationally-Furnished Project Materiel.

(35) Order 4660.1, Real Property Handbook.

(36) Order 4770.3, Transportation and Traffic Management of Government Property and Household Goods.

(37) Order 4800.2B, Utilization and Disposal of Excess and Surplus Personal Property.

(38) Order NM6000.6B, Airway Facilities Drawings.

(39) Order 6000.15B, General Maintenance Handbook for Airway Facilities.

(40) Order 6000.22, Maintenance of Two-Point Private Lines.

(41) Order 6000.30B, Policy for Maintenance of the National Airspace System Through the Year 2000.

(42) Order 6000.36, Communications Diversity.

(43) Order 6030.45A, Facility Reference Data File.

(44) Order 6032.1, Modification to Ground Facilities, Systems, and Equipment in the National Airspace System.

(45) Order 6470.29A, Maintenance of En Route A/G Communications Facilities.

(46) Order 6510.4A, Radio Communications Requirements for Air Traffic Control Facilities.

(47) Order 6650.9, Requirements for Area Control Facility Under the Floor Cabling.

(48) Order 6950.2, Electrical Power Policy Implementation at National Airspace System Facilities.

(49) Order 6950.15B, ARTCC Critical Load Circuits and Configuration.

(50) Order 6950.17, Maintenance of Electrical Systems in Buildings.

(51) Order 6950.18, Maintenance of Electrical Distribution Systems.

(52) Order 6950.19, Practices and Procedures for Lightning Protection, Grounding, Bonding, and Shielding Implementation.

(53) Order 6950.20, Fundamental Considerations of Lightning Protection, Grounding, Bonding, and Shielding.

(54) Order 6950.22, Maintenance of Electrical Power and Control Cables.

(55) Order 7032.4, Air Traffic Service Operational Requirements for Voice Switching and Control System (VSCS).

f. Other VSCS Documentation.

(1) Program Engineering and Maintenance Service Program Master Plan for VSCS.

(2) VDF/RI IDF Top Level Design A/G - FSD/VSCS-WP-001.5, dated February 24, 1993.

(3) VDF/RI IDF Top Level Design G/G - FSD/VSCS-WP-004.1, dated March 1, 1993.

(4) VSCS ILSP (see subparagraph 56b).

(5) VSCS Subsystem Training Plan (STP).

(6) VSCS Operational Transition Plan.

(7) VSCS Transition Switch Implementation Support Plan.

(8) VSCS MMP (see subparagraph 56i).

(9) VSCS Site Configuration Policy by ATR-320, dated July 28, 1993.

(10) VSCS Production Request-for-Proposal (RFP) DTFA01-88-R-00382.

(11) VS-I-01, VSCS-Trunks IRD.

(12) VS-I-03, VSCS-Existing Radio Interface ICD.

g. Other Standards.

(1) IEEE 802.3, Carrier Sense, Multiple Access with Collision Detection (CSMA/CD) standard similar to Ethernet.

(2) NFPA-70, National Electrical Code.

58.-59. RESERVED.

# CHAPTER 6. PROJECT FUNDING

60. PROJECT FUNDING STATUS. Funding for the VSCS is the responsibility of the VSCS Program Manager. This order does not address funding for development, acquisition, or engineering support nor does it include any specific dollar amounts. It does address cost estimates for regional/facility requirements, as addressed in paragraph 61, and the funding methodology for regional/facility work efforts. This order does not address funding for development, acquisition, or engineering support, nor does it include any specific dollar amounts. Funding levels for the VSCS Program are subject to congressional approval.

61. REGIONAL/FACILITY COST ESTIMATES. AAP-10, with support from the regions, has developed an F&E cost estimate for field implementation of each segment of the VSCS Program. These estimates include training and travel costs prior to IOC and covers the following:

a. Regional office engineering - salary and per diem for regional office F&E personnel.

b. Site preparation - salaries and per diem for field F&E personnel, including materials required.

c. Monitoring support - salaries and per diem or VSCS contractor support (see chapter 9) for monitoring electronic installation.

d. Travel - appropriate travel for operations personnel.

e. Overtime - appropriate overtime to backfill for AT and AF operations personnel.

f. Equipment relocation - relocation of equipment that remains in use, but must be moved to allow installation of VSCS segments.

g. Equipment removal and disposition - equipment replaced by VSCS segments is to be removed and disposed of by the program.

62. F&E PROJECT FUNDING DISTRIBUTION. Funds are distributed on an fiscal year (FY) basis, as soon after the start of the FY as possible, in the following manner:

a. Regional Personnel, Compensation, Benefits, and Travel (PCB&T). A project authorization (PA), issued by the Office of Budget, will include specific funds for salary, per diem, travel costs for regional office F&E, and travel and backfill overtime for operations personnel.

b. PA to Washington Organizations. A PA, issued by the Office of Budget to Washington organizations, will assign and transfer, as required, VSCS funds to other organizations doing VSCS work (e.g., ASM, ANS, ACN, etc.).

c. PA to Regions. A PA will be issued by the Office of Budget to the regions to establish funds for equipment and materials required for site preparation and equipment relocation, removal, and disposition. These funds will be issued to the regions as requested by the program office.

63.-69. RESERVED.

# CHAPTER 7. DEPLOYMENT

70. GENERAL DEPLOYMENT ASPECTS. Due to the importance of the ATC communications and operations, the VSCS is installed such that VSCS and the existing communications system (WECO 300/ 4-channel radio equipment) both have access to the same interfaces, but not simultaneously. Operation is accomplished utilizing a VSCS transition switch as shown in figure 7-1. The transition switch permits line-by-line switching for testing purposes. In normal operational cutover, the VSCS transition switch switches the entire facility between the existing communications system and the VSCS. The VSCS transition switch does not allow simultaneous ATC communications from both the existing communications system (WECO 300/4-channel radio equipment) and the VSCS.

a. Deployment Aspects.

(1) The VSCS contractor:

(a) Defines generic site preparation requirements in the SPDIP (CDRL - VP 14).

(b) Performs SAS.

(c) Prepares a detailed SAP (CDRL - VP 13) for each site.

(d) Performs site readiness surveys.

(e) Prepares the Site Readiness Review Report (CDRL - VP 15).

(f) Ships, installs, and checks out the VSCS transition switch and VSCS IDF (which is separate and apart from the VDF/RI IDF).

(g) Modifies the existing consoles.

(h) Ships the VSCS to the site.

(i) Ships, installs, and checks out the VCET to the site.

(j) Installs and checks out the VSCS in accordance with the approved SAP.

FIGURE 7-1. VSCS TRANSITION SWITCH

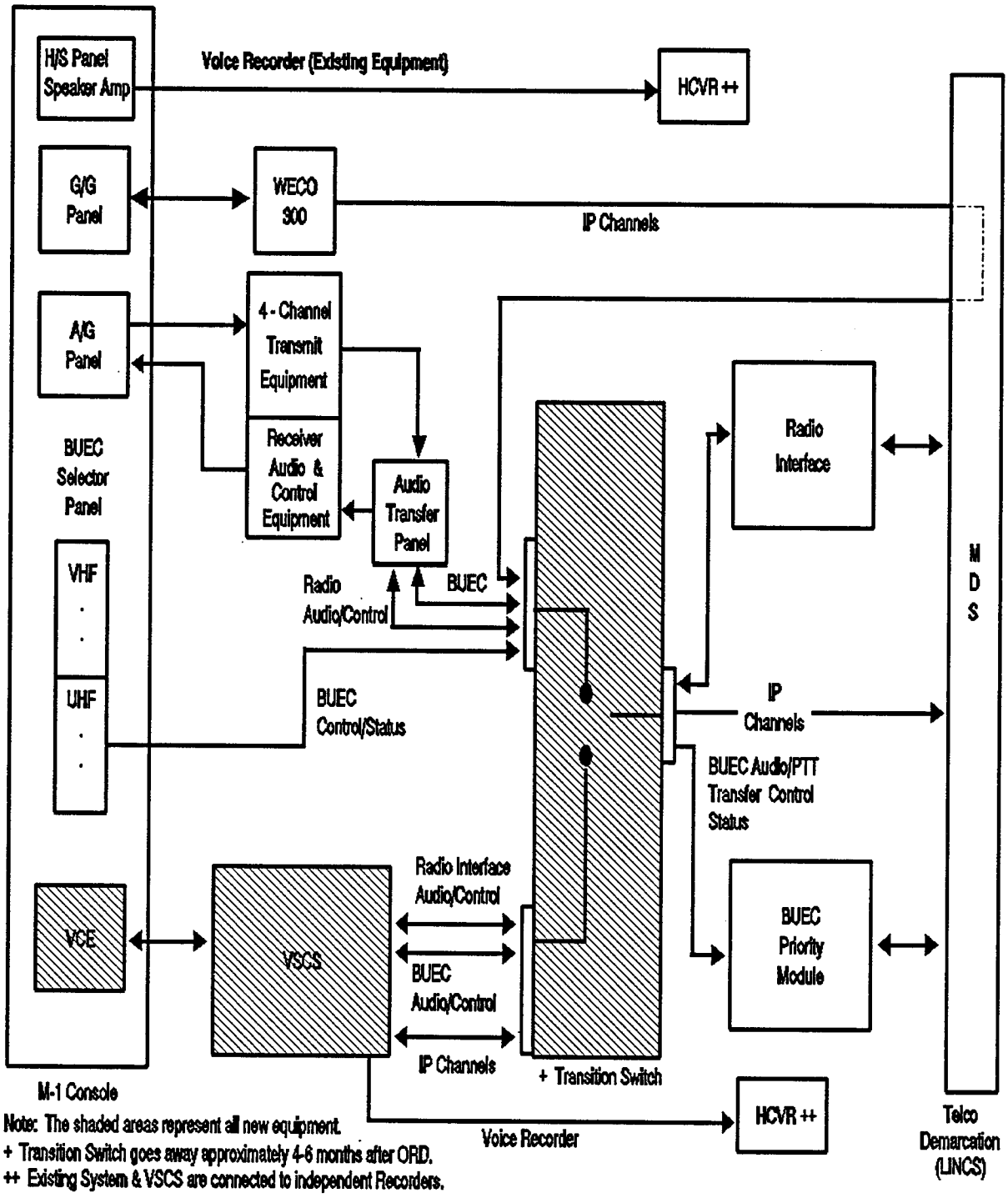

(k) Performs site acceptance testing (SAT) in accordance with the VSCS contractor-developed and FAA-approved test plans and procedures.

(2) The FAA:

(a) Accomplishes the required VSCS site preparation as defined in the FAA-approved SAP and Site Preparation Design Information Plan (SPDIP).

(b) Accomplishes site preparation, installation, and the ORD of all VSCS interdependency programs defined in paragraph 42.

(c) Conducts a pre-installation walk-through to ensure that all site preparation activities have been successfully completed and equipment, tools, and personnel are onsite and ready for installation.

(d) Performs the CAI in accordance with the provisions of Order 6030.45A.

(e) Performs the IT&E in accordance with developed plans and procedures.

(f) Completes the facility power system modifications (phase two) through cutover to the ACF Critical/Essential Power System (ACEPS).

(g) Declares IOC after the successful completion of the IT&E and required training.

(h) Performs operational system shakedown and operational transition in accordance with AOS-500/site-developed plans and procedures.

(i) Performs the JAI and declares the operational readiness date in accordance with the provisions of Order 6030.45A.

b. Deployment Readiness Review (DRR). Order 1800.63 establishes the requirements for a structured assessment of CIP projects to support a deployment determination. The deployment determination is based upon an objective assessment of a project's readiness to be integrated into the NAS and that the corporate FAA is ready to receive, utilize, and provide life-cycle support to the product when deployed. The assessment of deployment readiness is made by the corporate FAA through the efforts of a DRR team lead designated by the program manager and

staffed by personnel from a variety of specialties within the FAA. Members of the DRR team perform the assessment in accordance with Order 1800.63 and the DRR checklist. Individual DRR team members assist the VSCS Program Manager in developing the deployment readiness assessment by lending functional expertise to the overall team effort. The milestones and dates for VSCS and DRR activities are contained in appendix 3.

71. SITE PREPARATION. The site preparation performed at ACT, AMC, and the operational sites is based on the site preparation requirements identified in the FAA-approved SAP (CDRL - VP 13) and SPDIP (CDRL - VP 14). WECO 300/4-channel radio equipment is also installed at ACT for test and evaluation of the VSCS transition switch and cutover to VSCS.

a. ACT.

(1) Site Surveys. The VSCS contractor performed two site surveys at ACT. The VSCS contractor performed a SAS for the PDP at ACT 1 month after the VSCS production contract was awarded. This survey identified unique site characteristics relating to the installation and integration of VSCS. The second survey was the site readiness survey performed 3 months after contract award for the PDPU. The second site readiness survey determined that ACT was ready for installation of the VSCS PDPU. The results of the site readiness surveys were documented in the VSCS contractor-prepared Site Readiness Review Report (VP 15).

(2) VSCS Contractor Site Preparation. After the VSCS production contract award, the VSCS contractor began site preparation at ACT. VSCS contractor site preparation included modification of M-1 consoles, installation of the contractor's VSCS IDF, installation of cable trays and cabling, and the installation of power distribution and grounding in the VSCS equipment room and control room laboratory areas. The power installation involved placing four 40 KVA PCS and a static transfer switch between the FAA-provided power feeds and panelboards (see figure 3-3) along with installation of all branch circuit breakers and distribution wiring to each load.

(3) FAA Site Preparation. The FAA provided four AC power feeds (200A service) in the VSCS equipment room (see subparagraph 32d - electrical power) and five panelboards, with main breakers, in the control room laboratory area. Additionally, the FAA completed the site preparation activities identified in the Government-approved SAP (VP 13).

b. AMC.

(1) Site Survey. The VSCS contractor performed a SAS, including an electromagnetic interference/electromagnetic compatibility (EMI/EMC) survey. Normally, this survey is conducted 15 months prior to VSCS equipment delivery (AMC was an exception due to the REPLAN). The results of this survey were reported in the VSCS contractor-prepared SAP (VP 13). Four months prior to VSCS equipment delivery, the VSCS contractor performs a site readiness survey at AMC to determine if the site is ready for VSCS installation. The results of the site readiness surveys are documented in the VSCS contractor-prepared Site Readiness Review Report (VP 15).

(2) VSCS Contractor Site Preparation. VSCS contractor site preparation includes installation of student and instructor positions in the classrooms along with the installation of the contractor's VSCS IDF, cable trays and cabling, and power distribution and grounding in the VSCS equipment room and classroom areas. The power installation involves placing four 40 KVA PCS and a static transfer switch between the FAA-provided power feeds and panelboards (see figure 3-3) along with installation of all branch circuit breakers and distribution wiring to each load. Also, the contractor will provide and install VSCS test beds and mounting racks in the FAA Logistics Center Warehouse Building with associated cabling to the AMA VSCS switching located in the Thomas P. Stafford Building.

(3) FAA Site Preparation. The FAA must complete the site preparation activities identified in the Government-approved SAP (VP 13). The FAA provides a power source and installs panelboards in the VSCS equipment room and classroom areas (see subparagraph 32d - electrical power). The FAA also provides four 150A circuit breakers in the VSCS equipment area. In preparation for FAA Logistics Center test beds, FAA will provide a cabling duct bank from the Thomas P. Stafford Building to the Warehouse Building, conduit to the automation shop, power to VSCS test beds, and complete refurbishment of the space.

c. Operational Sites.

(1) Site Surveys. A transition site survey was conducted at the Seattle ARTCC 2 months after production contract award to determine generic transition requirements. Each operational site will have a SAS, including an EMC/EMI survey, performed 15 months prior to VSCS equipment delivery in accordance with the schedule in appendix 3. The SAS is estimated to take 30 working days and involves personnel from the VSCS contractor, the site and region, and the VSCS Program Office.

A generic survey agenda (developed by the VSCS contractor) will be provided by the VSCS Program Office to all regions and sites under a separate letter prior to the survey. During the SAS, the VSCS contractor gathers the site configuration data that is used to develop position, sector, area, and facility configuration maps and installation plans which include those required for DYSIM training. Additionally, during this survey, the VSCS contractor identifies all site preparation work that the FAA needs to complete at the site prior to VSCS equipment delivery. The results of this survey are reported in the VSCS contractor-prepared SAP (VP 13) and the Map Generation Report (VP 26). A site readiness survey at the operational sites occurs 6 months prior to VSCS equipment delivery. The results of the site readiness survey are documented in the VSCS contractor-prepared Site Readiness Review Report (VP 15).

(2) VSCS Contractor Site Preparation. The VSCS contractor modifies the site's existing consoles approximately 5 months prior to VSCS equipment delivery and installs the VSCS transition switch. The console modifications include the installation of the VCE position cabling and required metal bezel on the consoles to accommodate the VCE. Covers/plates are installed over any holes created during the console modifications. If relocation of existing console equipment is required, the VSCS contractor plans, coordinates, and relocates the FAA-owned equipment in the existing consoles and plans and coordinates the relocation of any leased equipment with the Government. These modifications are done during low-volume air traffic operations and on a not to interfere basis. A VSCS contractor-prepared video (CDRL 83 - Overview Course) demonstrates how this process is done to prevent unnecessary noise and interruption. VSCS contractor site preparation also includes installation of the contractor's VSCS IDF, cable trays and cabling, and the installation of power distribution and grounding in the VSCS equipment room and control room laboratory areas. The power installation involves placing four 40 KVA PCS and a static transfer switch between the FAA-provided power feeds and panelboards (see figure 3-3).

(3) FAA Site Preparation. Both AT and AF support the VSCS contractor site surveys. The FAA, primarily AF, monitors VSCS contractor activities during the contractor site preparation. Additionally, the following activities are performed by the Government prior to VSCS equipment delivery.

(a) In addition to the contractor-provided semi-trailer workshop and storage space, a temporary storage and workshop area of 450 sq. ft. must be provided for approximately 1 year or until the end-state workshop and storage space are available.

(b) Based on information contained in the FAA-approved SAP (VP 13), the site/region generates TSR's and submits them to ASM-320 for any TELCO activities required, per ASM direction.

(c) The FAA installs four power panelboards in the VSCS equipment area, under the MOD 1 package, including connecting the panels to the Government-provided critical power source (see subparagraph 32d - electrical power). The VSCS contractor installs their power conditioning equipment between the panelboards and the critical power source.

(d) The VSCS also requires the installation of power panels in the M-1 control room in addition to those being installed in the VSCS equipment room under MOD 1. It is expected that these panels will be connected directly to the critical bus and powered-up one breaker load at a time. The power requirements for the equipment and control rooms and the total number of power panels required are determined on a site-by-site basis.

(e) The MDS and LINCS are installed and the operational circuits are terminated on the MDS prior to VSCS transition switch delivery.

(f) The VDF/RI IDF is installed and cabled prior to VSCS equipment delivery. The installation and cabling of the VDF/RI IDF is defined in the VDF/RI IDF A/G and G/G Top Level Design documents (A/G - FSD/VSCS-WP-001.5, dated February 24, 1993, and the G/G - FSD/VSCS-WP-004.1, dated March 1, 1993).

72. DELIVERY. The delivery of the VSCS equipment for ACT, AMC, and the operational sites is shown in Appendix 3, VSCS Schedules.

a. ACT. The VSCS transition switch, VSCS IDF, and cables for ACT are delivered and installed prior to delivery of the VSCS. The VSCS contractor ships the hardware and software for the VSCS, including ACT support system, the VCET's, and VSCS common console cables.

b. AMC. The VCET's for the AMC are delivered with the VSCS switching equipment. Since the AMC is not receiving a VSCS transition switch, the VSCS IDF and cables are delivered with the

VSCS switching equipment. Included with the delivery of the VSCS switching equipment are the VSCS common console cables and associated equipment to support the common console VCE.

c. Operational Sites. The delivery of the VSCS to the operational sites occurs in three phases. The first phase is the delivery of the VSCS transition switch and VSCS IDF's 4 months prior to the VSCS equipment delivery. The second phase is the delivery of the VSCS equipment and VCET's. The third phase is the delivery of the PPI.

73. INSTALLATION PLAN. The VSCS contractor is responsible for shipping, moving, unpacking, installing, and integrating all VSCS hardware and software. The VSCS contractor is required to remove all packaging materials and dunnage and provide for offsite disposal. The VSCS contractor connects the VSCS to the facility power panels under FAA site personnel supervision. The FAA TOR coordinates with the VSCS contractor, oversees SAT conducted in accordance with the VSCS contractor-developed and Government-approved VSCS Test Procedures (CDRL - VP 75). Following the conclusion of SAT, the contractor has 30 days to publish its Site Test Report (CDRL - VP 76); the FAA has 45 days to review the document; and CAI (see paragraph 83) is conducted following approval of VP 76.

a. ACT Installation. The VSCS contractor installed the hardware and software required at ACT in two phases. The first installation was the prototype equipment, including the VSCS transition switch. The second installation was the hardware and software for the prototype upgrade equipment, including the VCET's. Following completion of OT&E and SST at ACT, the VSCS contractor performs a configuration upgrade on ACT system to make it equivalent to the first production article.

b. AMC Installation. The VSCS contractor installs the VSCS and the VCET's at AMC.

c. Operational Site Installation.

(1) Installation at the operational sites consists of the VCET's and VSCS equipment. The VSCS contractor performs acceptance testing on the VCET's after delivery. The VCET installation location in the facility is determined at the SAS.

(2) Five months prior to VSCS equipment delivery, the VSCS contractor arrives onsite to begin preparations for installation of the VSCS transition switch and VSCS IDF, and modifies the M-1 consoles to accept the VCE. Blank-off plates are installed in the M-1 consoles until VSCS equipment delivery.

The exact locations of the VCE are determined during the SAS and will be depicted in the M-1 console layout diagrams in the SAP (CDRL - VP 13). Generic information on the VCE locations is contained in the VSCS transition plan (VP 16). Four months prior to VSCS equipment delivery, the VSCS transition switch and IDF are delivered for installation. After the VSCS transition switch and VSCS IDF are installed, the VSCS contractor cables between the VSCS IDF and the FAA-provided distribution frame systems (VDF/RI IDF and MDS). The VSCS transition switch is then cabled to the VSCS IDF. The relationship between the VSCS IDF and the FAA-provided distribution frame systems is shown in figure 7-2. The VSCS contractor performs acceptance testing on the VSCS transition switch after it has been cabled to the VDF/RI IDF. The VSCS transition switch and VSCS IDF are installed in the VSCS equipment area. The figure 7-3 shows the basement area reserved for the VSCS equipment.

(3) Upon VSCS equipment delivery, the VSCS contractor installs the VSCS switching equipment in the control room basement. The installation includes all VSCS switching equipment required to support the existing consoles and the ISSS. The relative location of VSCS with respect to other systems is shown in figure 7-3. The VDF/RI IDF is located within the RCE footprint area. The VSCS contractor is responsible for cabling between the VSCS IDF and the VDF/RI IDF.

(4) Installation of the VCE consists of the VSCS contractor removing any covers/plates in the consoles and DYSIM installed during site preparation and then inserting the VCE. The VSCS contractor connects the VCE, the VSCS switching equipment, and the FAA-provided power panels. During the VCE installation, the FAA monitors the VSCS contractor and verifies the operation of the existing equipment prior to the consoles being returned to service. The VCE's are installed in a manner to minimize impact to ongoing AT operations.

(5) Transition equipment removal is completed by the VSCS contractor when jointly authorized by the facility AF and AT managers; normally 4 to 6 months after VSCS operational readiness date.

74. PLANNED PRODUCT IMPROVEMENTS (PPI).

a. Site Surveys. The VSCS contractor performs a second SAS for the PPI to determine the site specific installation, integration, checkout, and acceptance requirements. This survey occurs 8 months prior to delivery of the PPI at ACT, AMC, and the operational sites in accordance with the schedule in appendix 3. The results of the survey are documented in the SAP (VP 13) and

FIGURE 7-2. FRAME GROUP RELATIONSHIP

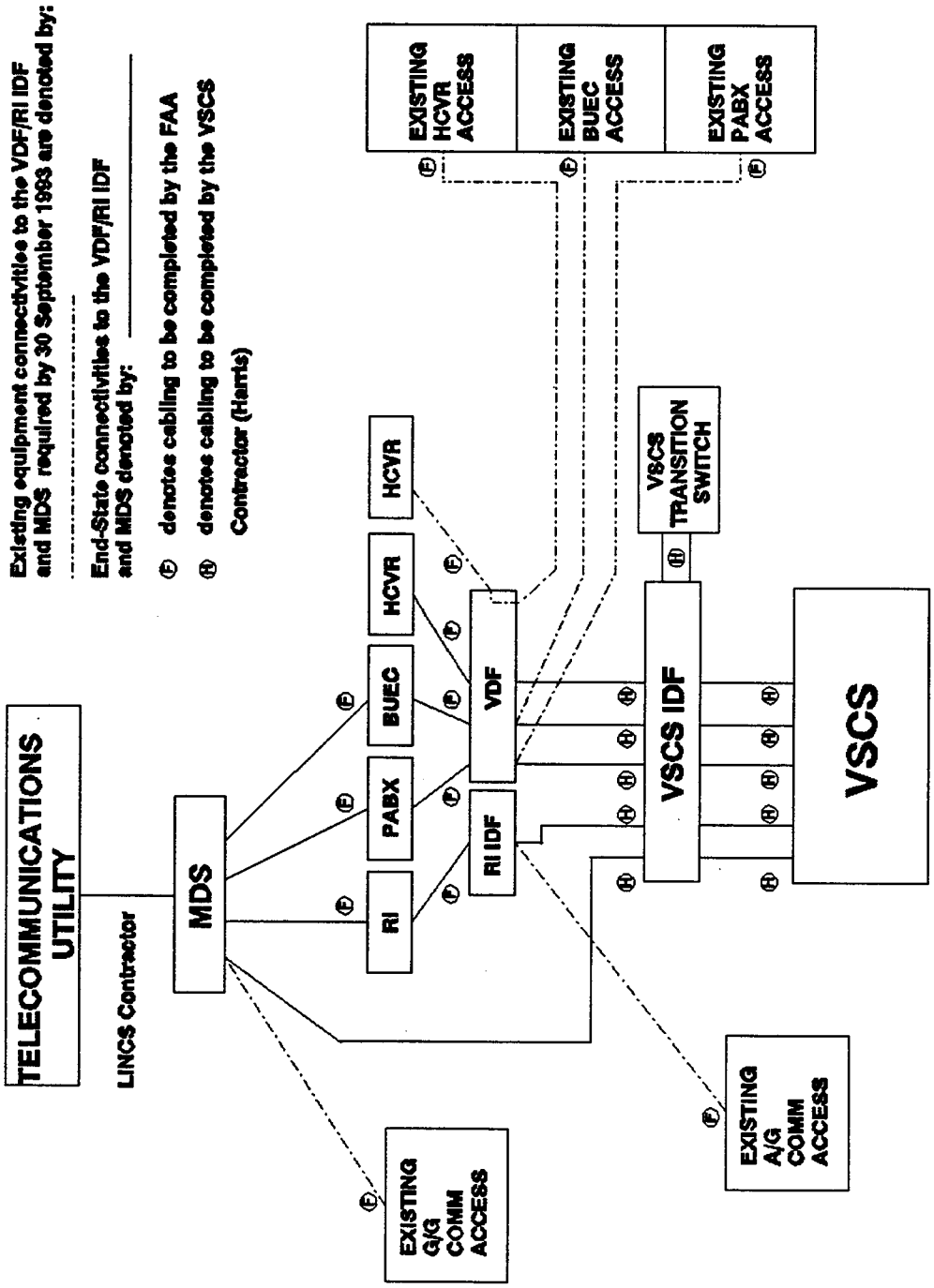

the map generation report (VP 26). The VSCS contractor performs a second site readiness survey for the PPI to determine if the facility is ready for delivery and installation of the PPI. This survey occurs 2 months prior to delivery of the PPI. The results of the survey are documented in the Site Readiness Review Report (VP 15).

b. Installation. The VSCS contractor delivers, installs, integrates, checks out, and tests the PPI software in accordance with the schedule in appendix 3.

75.-79. RESERVED.

FIGURE 7-3. VSCS FLOOR PLAN

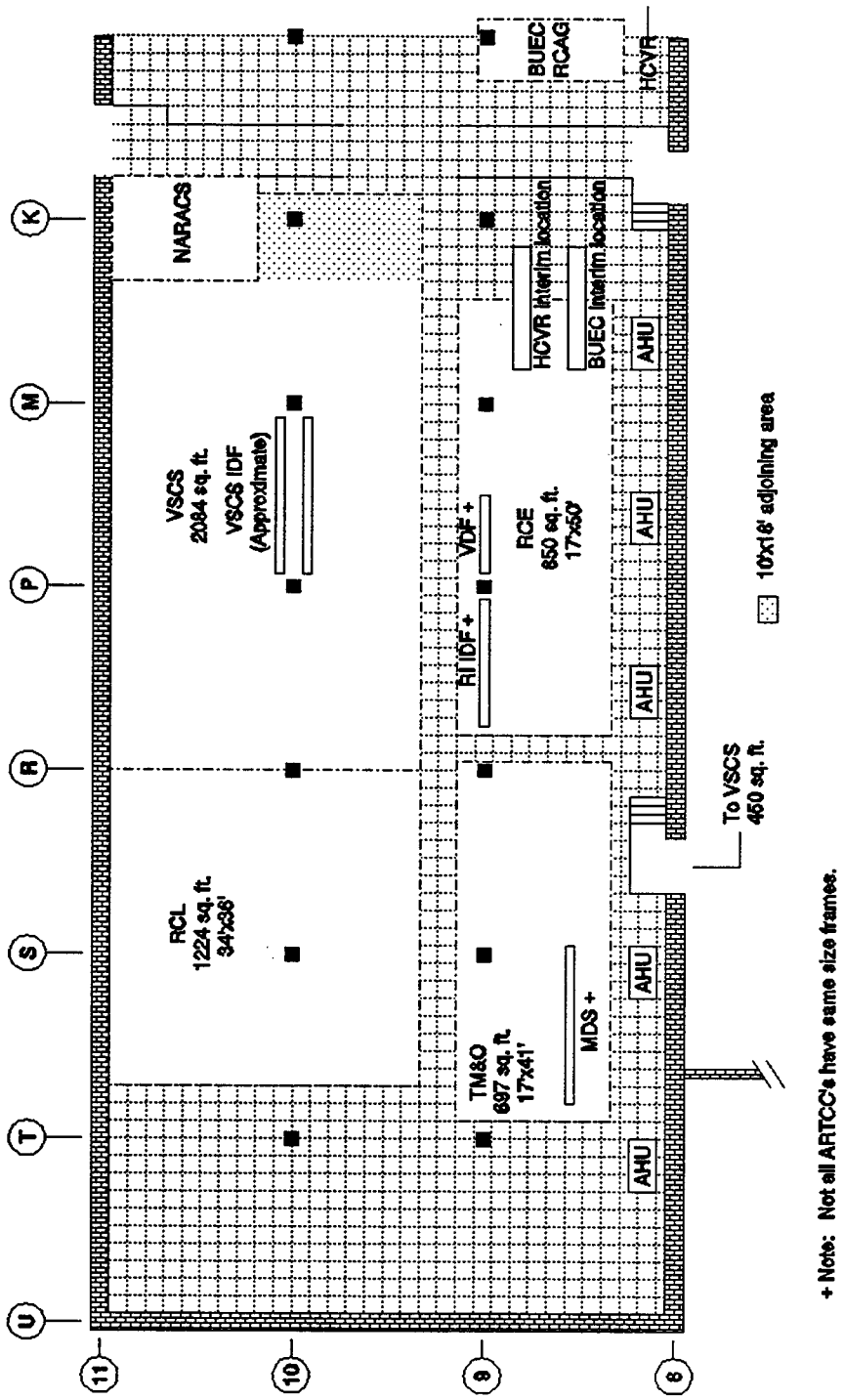

# CHAPTER 8. VERIFICATION

80. OVERVIEW OF VERIFICATION AND TESTING. For test and evaluation purposes, WECO 300/4-channel radio equipment was installed at ACT to evaluate the VSCS transition switch. Refer to figure 8-1 for an overview of VSCS testing after developmental testing. For a detailed explanation of FAA testing and acceptance, please refer to Orders 1810.1F, 1810.4B, and 6030.45A. During the VSCS production phase, the following four types of testing occur in accordance with the VSCS Product Specification attachment J-7, Master Test Plan:

a. Development Testing and Evaluation (DT&E). DT&E is a set of functional, performance, and reliability, maintainability, availability (RMA) tests for the VSCS conducted during the VSCS development phase to ensure that it satisfies the requirements of the VSCS Product Specification.

(1) Factory DT&E includes a 7 day, 24 hours per day software stress stability test and software stress test to identify software errors, normal behavior, range of functions, the ability of the system to meet voice intelligibility, and to recover from erroneous inputs. The failure mode/stress tests verify the fault tolerance and failure recovery capabilities of the VSCS. Hardware failures are induced to verify automatic switching to redundant or backup equipment and that all signal paths within the VSCS are operational. The factory tests also include design qualification tests (e.g., vibration, shock, thermal, etc.) and a reliability demonstration test to verify the functionality and performance requirements of the VSCS Product Specification. FAT of the upgraded prototype system and VSCS transition switch also are a part of DT&E.

(2) DT&E at ACT included VSCS contractor installation and checkout of the upgraded VSCS prototype system and transition switch to verify that the system performed in ACT at the level demonstrated at the VSCS contractor's factory, and that the system was ready for failure mode/stress tests. The failure mode/stress tests verified that the system met the performance requirements using ACT site unique-adaptation data. The failure mode/stress tests verified the fault tolerance and failure recovery capabilities of the VSCS. Hardware failures were induced to verify automatic switching to redundant or backup equipment and that all signal paths within the VSCS were operational. The VSCS contractor performed integration and acceptance tests to verify that the system functioned with the external (real and simulated) interfaces, including the traffic simulation units, located at ACT, and that the system was ready for FAA testing.

FIGURE 8-1. VSCS TESTING FLOWCHART

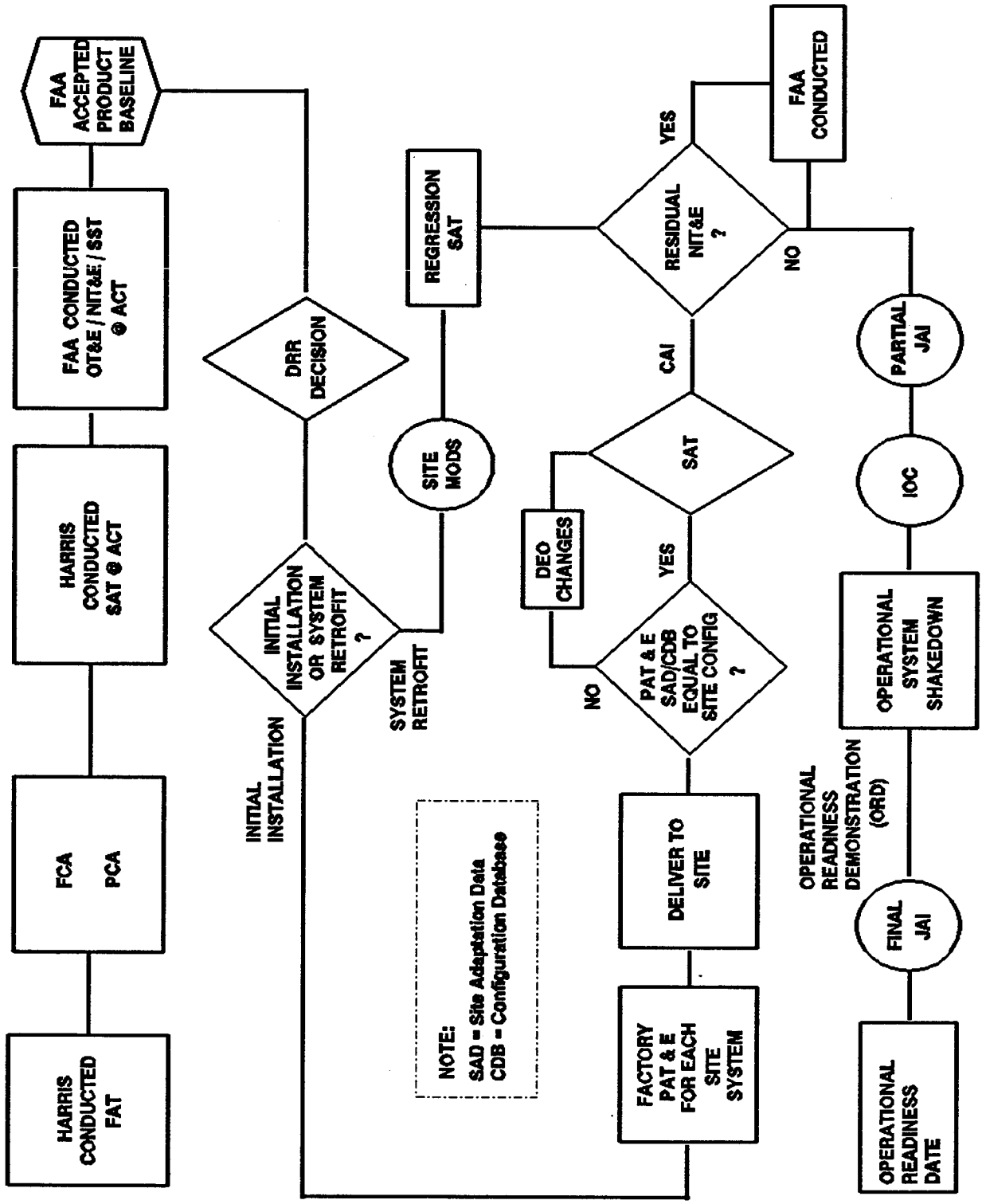

b. The NAS Integration Test and Evaluation (NAS IT&E). NAS IT&E was performed by ACT Voice Switching Automation Division (ACN-200). NAS IT&E concentrated on verifying that the VSCS met the NAS System Specification, NAS-SS-1000. It was conducted at the ACT in accordance with NAS-MD-110 to determine the degree to which the VSCS could be integrated into the NAS environment. NAS IT&E on the current prototype equipment occurred at ACT after the VSCS contractor installed the system and conducted SAT. NAS IT&E was performed on the 60-position PDP at ACT with VCE for 40 positions. The 60-position PDP equipment was integrated with the modified M-1 console. NAS IT&E was also performed on the 430-position PDPU at ACT with VCE's for 70 positions. The 430-position VSCS was integrated initially with the modified M-1 console and then the ISSS common consoles. IT&E may also be performed at each site by the FAA (see paragraph 84).

c. Operational Test and Evaluation (OT&E). OT&E consists of AF and AT OT&E areas as defined in the OT&E Test Plan, dated January 29, 1993, and the VSCS Product Specification attachment J-7, Master Test Plan. OT&E is performed in accordance with Order 1810.4B at ACT prior to VSCS delivery to the field, using field AT and AF personnel supported by VSCS contractor maintenance personnel, to evaluate the VSCS's operational performance in a simulated ARTCC environment. ACN-200 is responsible for OT&E. Specifically, the test validates:

(1) VSCS fulfillment of all user operational requirements.

(2) VSCS readiness and suitability for field deployment.

(3) VSCS transition procedures to the WECO 300/4-channel radio equipment configuration. This includes validation of procedures for switchforward (to VSCS), switchback (to WECO 300/4-channel radio equipment), and fallback (see paragraph 87).

d. System Shakedown Testing (SST). The SST will not take place during initial OT&E, but is a concurrent AT and AF activity during the follow-on OT&E activities. The SST, the last phase of OT&E performed at the ACT prior to VSCS delivery to the field, tests and evaluates the VSCS in a simulated operational environment to determine that the system is ready for deployment to the field as part of the current NAS. The SST conducted at ACT is different from the system shakedown activities performed at the field sites (see paragraph 87). The SST is not bound by the same specifications as the OT&E. The SST measures the

integrated readiness of people, procedures, documentation, and the VSCS to assume field operational status. This measurement is accomplished by bringing field site personnel to ACT. To this end, VSCS SST is task oriented with tasks that assess system operational usability, training, supportability, reliability, availability, maintainability, etc. The SST requirements and procedures are jointly developed by AOS-500 and ATR-320 with support of regional AF and AT divisions. Initial SST at ACT is accomplished as part of the OT&E by AOS-500 and ATR-320, supported by AF and AT field personnel. The SST plans and procedures developed by AOS-500 provide the basis for shakedown activities at the VSCS field sites (onsite system shakedown or field shakedown).

e. Production Acceptance Test and Evaluation (PAT&E). These are a set of tests that assure production articles meet project requirements. These tests include a FAT of every fielded VSCS prior to shipment, plus tests and evaluations performed at each site. The portion of the PAT&E performed at each site includes tests and demonstrations to assure the FAA that the VSCS is indeed able to meet the ATC performance and capacity requirements, and that transition to the VSCS from the existing systems (hardware and software) is orderly and safe. PAT&E at the sites consists of installation and checkout, site integration, and site acceptance.

81. FACTORY VERIFICATION. Factory verification, which is conducted during both the VSCS development and production phases, demonstrates that the VSCS meets specified requirements. The VSCS contractor is required to use a bottom-up test approach for verification testing. The VSCS contractor proposes pass/fail criteria for each test for approval by the FAA. Along with the bottom-up testing approach, VSCS contractor testing follows a build approach. In a build approach, a well-defined subset of requirements is defined, and compliance of that build with requirements is verified before proceeding to the next higher level of integration. The software components of each build comprise complete units or software stub and driver units (as distinguished from incomplete units). Additional complete units are added in each successive build. The functional capabilities of each successive build increases until the final build implements all VSCS requirements. The goal of this approach is to integrate hardware configuration items (HWCI) and computer software configuration items (CSCI's) as early as possible. A complete series of tests on the VSCS equipment and software and on operation and maintenance procedures are performed at the factory. These tests demonstrate that all hardware, software, and performance requirements are met.

a. Hardware Testing. Hardware testing verifies proper operation from the simplest division to the most complex (e.g., from part, assembly, module, unit, cabinet, subsystem, and finally to system).

b. Software Testing. Similarly, software is tested at the unit, computer software components (CSC), CSCI, and then system levels. Controlling CSC's are developed before the controlled CSC's, so that the controlling CSC's are exercised as much as possible prior to their becoming operational.

c. Interface Testing. IT&E ensures that hardware and software interfaces between VSCS subsystems, the VSCS, and external systems are correct and fully operational.

82. VSCS CONTRACTOR-CONDUCTED SITE TESTING. Site installation and checkout tests are VSCS contractor-conducted tests on the VSCS at ACT, AMC, and each operational site to verify proper system operation.

a. Checkout. The tests verify the readiness of the system for the stress tests and the system integration and acceptance tests. RMA data is collected and evaluated by the FAA to establish confidence in the system and to determine, at an early stage, any degradation of the VSCS.

b. VSCS Contractor (IT&E). These tests are conducted by the VSCS contractor at ACT, AMC, and the operational sites after successful completion of site installation and checkout. The primary objectives are to verify:

(1) Item compliance with selected functional performance requirements, including primary processing and data entry, and display requirements.

(2) Site adaptation is correct.

(3) The support facilities are ready.

(4) Correct system performance has been achieved and the system is ready for operational system shakedown and cutover.

c. Site Acceptance Testing (SAT). SAT (refer to figure 8-1) is formal, FAA-witnessed testing in which the contractor proves that the VSCS meets the site's functional requirements.

SAT is conducted in a phased series of tests and reviews such as the test readiness review, VSCS closed system formal testing, VSCS to Government-furnished equipment (GFE) resource validation, and VSCS control room testing. SAT marks the end of contractor-conducted testing.

83. CONTRACT ACCEPTANCE INSPECTION (CAI). The CAI is the formal acceptance, by the FAA, of the VCET/VSCS from the VSCS production contractor and marks the point when the FAA takes possession of the VCET/VSCS. CAI for VSCS is conducted in two phases. Phase one is the acceptance of the VCET's 1 month after they are installed. The second and final phase is the acceptance of the VSCS after successful conclusion of SAT (refer to figure 8-1) at a specified time following the conclusion of all site test activities (refer to the VSCS Onsite Project Management Plan) and approval of the SAT test report. The CAI is conducted, in accordance with the provisions of Order 6030.45A, by the TOR utilizing the CAI checklist (FAA Form 6030-19 can be used as an example to derive the CAI checklist). At the conclusion of each CAI, the QRO will sign the FAA Form 256, which accepts the VCET/VSCS on behalf of the Government, and initiates FAA Form 4500-1. VSCS contractor maintenance and logistics are provided for 1 year beginning at the final CAI (see paragraph 91).

84. FAA INTEGRATION TESTING AND EVALUATION (IT&E). The FAA performs IT&E (operational site testing) following the successful completion of system CAI. Operational site testing is accomplished by site personnel and supported by AOS-500 and the En Route Field Support Branch (ATR-420), with support from ACN as requested, after the FAA takes full responsibility of the VSCS hardware and software from the VSCS contractor at CAI. These tests evaluate the VSCS's capability to support a particular site's AT operations, including the capability to support their AF maintenance and logistics functions. It is the verification process that becomes the basis for facility management declaration of VSCS IOC.

a. Operational site testing is conducted and monitored at each of the 24 operational VSCS sites by the AT and AF field organizations that are responsible for testing. Generic site testing plans and procedures, developed by AOS-500, may be used by the site to develop an operational site testing plan. The VSCS production contractor supports FAA personnel in conducting testing as required (see chapter 9).

b. The objectives of operational site testing are to:

(1) Assess the adequacy of operational and maintenance proficiency evaluations and hands-on training.

(2) Evaluate the adequacy of system failure detection and recovery procedures.

(3) Determine whether the VSCS and its procedures will support a transition from the existing communications system (WECO 300/4-channel radio equipment) to the VSCS and visa versa without degrading ATC operations and service to the user.

(4) Perform testing of operational functions, including site adaptation data, and system configuration.

(5) Evaluate the suitability of displayed operational data.

85. JOINT ACCEPTANCE INSPECTION (JAI). A JAI is performed for each operational site before the VSCS is commissioned in accordance with Orders 1800.8F, National Airspace System Configuration Management, and 6030.45A. JAI is the point where hardware and software installation and testing are complete and meet VSCS operational requirements allowing initial use of VSCS communications by ATC.

a. JAI Preparation. The activities to be accomplished by personnel from the regional AF division, AF sector, and regional AT division prior to, during, and after the VSCS JAI are contained in Order 6030.45A.

b. JAI Concept. The JAI is accomplished near the end of the implementation phase at the end of system shakedown and prior to the ORD. It is an activity to gain consensus of all involved groups that the VSCS implementation has been completed in accordance with national standards. To gain this consensus, a Joint Acceptance Board consisting of representatives of the VSCS Program Office, the AF sector, AT, and others, as appropriate, convene to formally inspect the VSCS. To provide a manageable progression to the final JAI, establishment of partial JAI's or intermediate steps is an acceptable strategy. A consensus at partial JAI declares that the portion of the system under consideration is to be accepted as functional within the NAS system and operation by FAA personnel may begin. IOC is an example of such a partial JAI. Throughout the JAI process, the VSCS contractor physically maintains the system which is continued 1 year after CAI (see Maintenance, chapter 9). Although the FAA assumes maintenance management responsibility after CAI, VSCS maintenance is delegated to the VSCS contractor.

86. Initial Operational Capability (IOC). IOC is the declaration by site AT and AF managers, in concert with responsible FAA headquarters and regional personnel, that the VSCS (hardware, software, procedures, and personnel) is capable of being certified (see subparagraph 92h). IOC shall be accomplished prior to site shakedown and establishes the first time that the VSCS can be used to conduct limited ATC operations. This means VSCS can replace the existing communications system during selected periods of time. "After IOC at each site, no modifications to software or hardware can be made without going through the full FAA CM procedures."[2] The following are prerequisites to declaration of IOC in accordance with Order 6030.45A:

(1) All initial testing has been completed, with no critical program technical reports (PTR) or hardware discrepancy reports (HDR) outstanding.

(2) The required availability characteristics have been demonstrated, or an operationally acceptable, independent access to emergency communications capability (i.e., BUEC) has been deployed in parallel with VSCS.

(3) The number of operational AT and AF site personnel, as specified in the MRD, have completed CHI training on the VSCS.

(4) VSCS hardware and software maintenance training for the maintenance to be performed by the FAA has been completed as specified in the MRD.

(5) VSCS data base management training for appropriate AT and AF personnel has been completed as specified in the MRD.

(6) Procedures related to VSCS usage and transition procedures have been developed and documented in appropriate agency and facility orders, and personnel have been trained in these procedures.

(7) Facility contingency plans covering VSCS usage, switchforward, switchback, and fallback are in place.

---

[2] AOS-500 memorandum dated March 9, 1993.

(8) Letters of agreement are in effect with appropriate facilities[3] covering transition procedures and support requirements.

(9) An FAA VSCS Certification Order (see subparagraph 92h) has been issued, and the VSCS can be certified by AF for operational use.

(10) Site AF personnel have received necessary certification authority, and VSCS A/G communications equipment has been certified (see subparagraph 92h for certification).

(11) Facility management personnel have developed confidence during FAA testing of the system's ability to function safely and effectively in a live ATC environment.

(12) Other operational systems are operating and adequate to support ATC (e.g., BUEC, radar, ATC host computer, direct access radar channel (DARC), etc.).

(13) Current FAA-accepted final copies of all necessary VSCS documentation have been delivered to the site.

(14) All preventive and corrective maintenance procedures have been tested.

(15) Software and data base adaptation procedures have been tested. Tests will include updates while the VSCS is operating, without causing any adverse impact on VSCS.

(16) A partial JAI has been conducted to formally declare IOC. The partial JAI includes a documentation review to ensure that the system meets both operational and maintenance requirements. Upon completion of the partial JAI, the VSCS is ready to begin system shakedown.

87. SYSTEM SHAKEDOWN AND OPERATIONAL TRANSITION.

a. System Shakedown. Sometimes referred to as field, site, or operational shakedown, this paragraph provides guidance to facility management for conduct of an orderly transition from the existing WECO 300/4-channel radio equipment to VSCS during system shakedown (i.e., the period between IOC and ORD). ASM-300 will provide coordination with the WECO 300 service contractor during VSCS implementation and transition. Implementation of VSCS

[3] Affected facilities are internal/external terminal facilities, flight service stations (FSS), adjacent ARTCC's, and central flow control function (CFCF).

equipment in the M-1/plan view display (PVD) consoles is necessary to avoid the potential risk of simultaneous failures that might occur with a transition to a new communications system and ISSS workstations at the same time. The VSCS is also installed in the M-1's to support a transition from the M-1/PVD control room to ISSS. It is necessary for controllers at both workstations (M-1 and ISSS) to communicate with each other to support the transfer of control of aircraft.

b. System Shakedown Overview. System shakedown for VSCS is conducted in four phases, shakedown I, II, III, and IV in accordance with Orders 1810.4B and 6030.45A. Shakedown I and II verify the functionality of the system, while shakedown III and IV provide operational experience and confidence. Each phase, in varying degrees, provides an opportunity to evaluate the system's operational acceptability. The four phases are described briefly in the following subparagraphs and in detail in subparagraphs 87f(1) through 87f(4).

(1) Shakedown I. Beginning at a period of minimum traffic (e.g., 2:00 a.m.), shakedown phase I verifies the ability to transition to the VSCS and back to the existing communications system. This constitutes one of the most critical periods in the transition. It is the first time the fully populated VSCS transition switch is set forward to VSCS and back to the existing communications system in a live ATC environment. The contingency plans developed as part of this transition are focused on this moment to minimize the impact of any loss of communications. After shakedown I has exercised the VSCS transition switch satisfactorily, subsequent phases may be approached with more confidence.

(2) Shakedown II. This phase is conducted during periods of minimum to light traffic. This phase verifies the functionality of each line, radio, sector configuration, and each VSCS map. It also verifies ancillary positions (i.e., Area Manager-in-Charge (AMIC), Traffic Management Unit (TMU), NASM, Center Weather Service Unit (CWSU), and Military Operations Specialist (MOS)).

(3) Shakedown III. The objective of shakedown III is to allow each crew to use VSCS during light to moderate traffic. It would typically commence on the late swing-shift and progress through shift change onto the mid-shift, transitioning back to the existing communications system prior to traffic buildup in the morning. This phase is repeated until all crews have hands-on experience with the new system.

(4) Shakedown IV. This phase advances into heavier traffic (typically the day-shift) for the first time and, as confidence is gained, progresses to a full 24-hour operation. When the new system has demonstrated stability and a high level of confidence is gained by all personnel, a joint management decision is made to conduct the ORD.

c. Definition of Transition Terms. The terms switchforward, switchback, and fallback are used frequently in describing the operational transition strategy.

(1) "Switchforward" is the PLANNED transition from the existing communications system (i.e., the WECO 300/4-channel radio equipment) to usage of the VSCS.

(2) "Switchback" is the PLANNED transition from usage of the VSCS back to the WECO 300/4-channel radio equipment.

(3) "Fallback" describes the UNPLANNED OR EMERGENCY transition from the VSCS back to the WECO 300/4-channel radio equipment that may occur if a failure of part or the entire system (hardware, software, procedure, etc.) occurs that renders the VSCS unable to support ATC operations.

d. Operational Support Functions. System shakedown activities require close coordination between the AMIC, NASM, TMU, area supervisors (AS), transition coordinator, and the AF technician in managing the transition. The following subparagraphs discuss the functions of the operational support personnel as related to transition activities for VSCS (also see ATR-320' VSCS Site Configuration Policy document, dated July 28, 1993).

(1) Area Manager-In-Charge (AMIC). The AMIC oversees all AT operations. The AMIC is responsible for determining which voice switching system the active control room is using and, in coordination with the NASM, determines if switchback is necessary.

(2) NAS Manager (NASM). The NASM oversees the functioning of all equipment that is part of the NAS.

(3) Area Supervisor (AS). The AS's need to carefully monitor their sector communications and configuration status. They also coordinate all transition activities with their ATC specialists. The AMIC and transition coordinator coordinate shakedown activities with the AS's. The AS's are responsible for entering messages to reconfigure VSCS when sectors are combined or decombined.

(4) Traffic Management Unit (TMU). During system shakedown, the TMU works closely with the transition coordinator providing alerts of significant impending changes and appropriate actions to assist transition recovery.

(5) Transition Coordinator. The transition coordinator is responsible for coordinating all shakedown phase activities impacting the control room. This individual provides guidance to the AMIC, NASM, and the AS's for carrying out transition activities outlined in the SIP. The transition coordinator is also the focal point for documenting problems and lessons learned. A transition coordinator is present at all times during system shakedown. The AMNI, or other designated facility personnel, serves as transition coordinator.

(6) AF Technician. There must be a trained AF technician present at all times during VSCS transition.

(7) Computer Human Interface (CHI) Expert. The CHI expert is available to assist during system shakedown. He/she is required to have an indepth knowledge of the VSCS CHI. This position may be optional due to facility staffing constraints.

e. System Shakedown Phases. This subparagraph describes the steps involved in introducing the VSCS to the operational ATC system and commences after declaration of IOC. System shakedown demonstrates that the VSCS can be used effectively in the operational ATC environment and that ARTCC personnel can support these operations. The time durations used in each phase are recommendations only to be used for planning human resource requirements and to provide a general milestone of events. Unlike the planned ISSS sector-by-sector transition strategy, the VSCS transition is conducted with all operational sectors simultaneously. The following system shakedown descriptions correspond to the flow charts contained in appendix 7.

(1) System Shakedown Phase I. The objective of system shakedown phase I is to exercise the VSCS transition switch and evaluate the operational impacts, if any. This exercise should be repeated as many times as necessary to establish confidence in the transition switch and procedures. A block diagram of the VSCS transition switch is shown in figure 7-1. System shakedown phase I should be conducted during a period of MINIMUM AT activity to lessen the impact of any possible communications failure. Phase I will be conducted on at least one shift. The following minimum steps describe the transition process for shakedown phase I.

(a) Coordinate the dates and shifts planned for shakedown activities and any planned outages of adjacent facilities with all affected facilities.

(b) Coordinate clearances and communications contact points with the appropriate facilities and issue alternative communications instructions to aircraft involved.

(c) Make the final notification to all personnel and then activate the VSCS transition switch.

(d) Evaluate the VSCS transition switch and verify that the VSCS is operational. The following questions should be considered during this step.

1. Have enough sectors been switched to VSCS to adequately support the evaluation? If not, can a useable system be established by reorganizing sectors?

2. Have sufficient IC/IP interfaces been switched to support the evaluation? (Numbers and criticality should be determined prior to setting the switch forward to VSCS.)

3. Have any unforeseen problems occurred requiring switchback?

(e) Verify that the exercise of the VSCS transition switch is successful, then switch back to the WECO 300/4-channel radio equipment before proceeding to system shakedown phase II.

(2) System Shakedown Phase II. The objective of phase II is to verify the communications and reconfiguration capability of operational positions. This phase of shakedown can commence any time after completion of shakedown I. Phase II will normally be conducted for a minimum of two to three shifts.

(a) The following factors should be considered in the decision to commence:

1. Confidence gained in system shakedown phase I.

2. The refining of coordination procedures as a result of any problems encountered in phase I.

3. The availability and scheduling of facility staffing.

(b) System shakedown phase II should be conducted during periods of light traffic (e.g., 1 a.m. to 3 a.m.). The following steps describe the transition process for shakedown phase II:

1. Coordinate as in phase I. Some coordination factors may be modified as confidence is gained in progressing through the phases.

2. Issue alternate communications instructions as in phase I.

3. The switch to the VSCS is performed as in phase I.

4. The following actions are performed to evaluate the successful transition to VSCS:

a. Exercise and verify operation of all frequencies, IP lines, and IC.

b. Verify VSCS configuration maps on all positions, including ancillary positions (e.g., E-Complex consoles, AS's, NASM, CWSU, DYSIM, etc.).

c. Accomplish necessary reconfiguration and verify accuracy on all affected positions.

d. Repeat reconfiguration, as necessary, to verify all maps.

e. Demonstrate procedures for remapping the system, (i.e., rebuilding a map while VSCS is on-line operationally).

f. Demonstrate procedures for performing a software update and an adaptation update on the system, without interfering with operational use.

g. Exercise and verify all functions (e.g., direct access, indirect access, queuing, call-forwarding, conference calls, etc.). Also, exercise the BUEC system.

h. Verify that communications recorders are functioning.

5. After capabilities of VSCS are verified, the facility is switched back to the WECO 300/4-channel radio equipment.

(3) System Shakedown Phase III. The objective of phase III is to exercise the system and develop VSCS user proficiency. The duration of phase III is approximately 2 to 3 weeks with light to moderate AT conditions. Personnel gain experience performing functions such as combining and decombining sectors, managing inputs associated with error referral, and conducting day-to-day operations in a degraded mode (e.g., operate with only one VDM per sector). The following steps describe the transition process for shakedown phase III.

(a) Coordinate as in phase I. Coordination procedures may be modified at the discretion of facility management to be appropriate with the VSCS confidence level.

(b) Alternate communications instructions may be issued as in phase I.

(c) The switch to VSCS is performed as in phase I.

(d) The following actions are performed to evaluate transition to VSCS.

1. Consolidation/deconsolidation of sectors and shift change occur during this shakedown phase.

2. Document VSCS and other malfunctions.

3. Verify that DYSIM, together with maximum levels of communications recording, do not derogate the VSCS operational system.

(e) Return to the WECO 300/4-channel radio equipment, or proceed to phase IV after objectives of phase III have been satisfied, VSCS stability has been demonstrated, and sufficient confidence is demonstrated in the system.

(4) System Shakedown Phase IV. The objective of phase IV is to achieve 100 percent operational capability and progress to a 24-hour per-day operation. The traffic level for system shakedown phase IV can be any traffic level but focuses on ensuring development of confidence during heavy traffic. As traffic and system conditions permit, continued conduct of phase IV leads to heavy traffic periods and a decision to progress to 24-hour per-day operation. Phase IV includes 4 weeks of uninterrupted use of the VSCS leading to ORD. The following steps describe the transition process for shakedown phase IV.

(a) Evaluate VSCS operation and correct problems precluding continuous operation.

(b) Operate VSCS on a continuous basis. After 72 hours of continuous operation, evaluate the confidence level in the system. The following factors are considered:

1. Have sufficient traffic loads been encountered by all personnel to result in confident use of the system?

2. Have all sectors been opened and all configuration plans been exercised?

3. Do any PTR's remain open that should be resolved prior to ORD?

4. Are there any other unresolved issues?

(c) A functional evaluation is conducted in the operational environment with no interference to ATC operations. The evaluation includes the following activities:

1. Demonstrate ability to implement a software upgrade for the VSCS.

2. Validate ability to make changes and additions to VSCS maps and/or adaptation.

3. Validate ability for system personnel to investigate errors, accidents, and incidents by effectively correlating the VSCS mapping data with system analysis recording (SAR) data and voice recording data. Site personnel validate the procedures required to collect sufficient data in a timely manner to support the FAA quality assurance requirements and the FAA headquarters' reporting requirements.

(d) Conduct the ORD (see paragraph 88).

f. VSCS Failure/Recovery Procedures. The objective of this section is to define a failure recovery process or fallback and an acceptable means of returning ATC operations to the WECO 300/4-channel radio equipment.

NOTE: Failures, as discussed in this paragraph, are not as described in the VSCS Product Specification paragraphs 3.1.3.1, 3.1.3.2.3, 3.2.3.2, 3.5.2.1.4, 3.5.3.2.3, 3.7.2, and 10.4; also see definitions in this order - appendix 1.

(1) From the operational perspective, several classes of voice communications failures may occur.

(a) Class I - A failure at a single position (e.g., a single frequency, a single ground circuit, or a single VDM).

(b) Class II - A more complex failure at a single position (e.g., both VDM's or the VSCS indirect access keypad (VIK)).

(c) Class III - A system failure detected at a single position (e.g., a conference call is disabled).

(d) Class IV - More than one position with a Class I, Class II, or Class III failure.

(e) Class V - A system level failure that impacts most or all of the positions.

(2) The failure recovery process for these failures is either a "workaround" or a switchback. A "workaround" is defined as the process that a controller normally uses to recover from voice communications failures. For example, a controller might use the VDM at an adjacent position, remap the position, use BUEC (see subparagraphs 30a and 30b), or use the VIK to perform a VDM push-to-talk function.

(3) Table 8-1 shows the failure recovery process for the five classes of voice communications failures, as applied to the early part (phases I and II) and the late part (phases III and IV) of the VSCS transition.

(4) Operationally, the first step in a voice communications failure/recovery procedure is a workaround as described in the previous subparagraph and table 8-1. The next step is a switchback to the WECO 300/4-channel radio equipment using the following procedures.

(a) Switchback to WECO 300/4-channel radio equipment.

1. Using the normal coordination process, the AMIC notifies all personnel (operations and maintenance) that a transition back to the WECO 300/4-channel radio equipment is to occur at a specified time.

TABLE 8-1. FAILURE RECOVERY FOR FAILURE CLASSES

| CLASS | VSCS TRANSITION | |
|---|---|---|
| | EARLY | LATE |
| I | Workaround | Workaround |
| II | Workaround | Workaround |
| III | Switchback | Workaround |
| IV | Switchback | Workaround or Switchback ♣ |
| V | Switchback | Switchback |

♣ The failure/recovery depends on the scope of the failure. That is, a few positions (perhaps five percent), or many positions (perhaps 20 percent).

2. In coordination with the AMIC, the NASM sets the VSCS transition switch back to the WECO 300/4-channel radio equipment.

(b) Evaluate the transition. Determine if an acceptable amount of the WECO 300/4-channel radio equipment is still functional.

(c) Execute a manual switchback. A technician should be standing by so that, in the event of an automatic switchback failure, he/she could manually return the VSCS transition switch to the WECO 300/4-channel radio equipment.

(d) Operate on the WECO 300/4-channel radio equipment.

(e) Repair the faulty VSCS components. All components of both communications systems (e.g., VSCS, transition switch, and WECO 300/4-channel radio equipment) should be restored to full operational capability before initiating another shakedown phase.

88. OPERATIONAL READINESS DEMONSTRATION (ORD). The ORD formally documents that the VSCS is ready to support real-time ATC tasks and that personnel, procedures, hardware, software, and support services are ready to begin full-time operation. The system has been examined or inspected as necessary to ensure that final refinement of operating parameters, procedures, methods, and adaptation has been accomplished, and the system meets

requirements for full operational use. The ORD is accomplished near the end of JAI, is done at each site, and culminates in the operational readiness date, which is the final step before VSCS commissioning.

89. PLANNED PRODUCT IMPROVEMENT (PPI) VERIFICATION REQUIREMENTS. The VSCS contractor develops acceptance tests for the prototype upgrade that verify that the PPI requirements of FAA-E-2731F (with addendum 2) are met. The VSCS contractor conducts the acceptance tests on the prototype upgrade at ACT. The VSCS contractor evaluates the results of performing acceptance testing of the prototype upgrade based on the PPI requirements of FAA-E-2731F (with addendum 2). The VSCS contractor documents the test results in the VSCS Test Report (CDRL - VPs 76-79) and submits the report to the Government. Updated versions of this order will contain additional information concerning the installation and transition of the PPI.

# CHAPTER 9. INTEGRATED LOGISTICS SUPPORT

90. BACKGROUND.

a. System Maintenance Automation. The VSCS incorporates automatic fault-isolation in the form of built-in test/built-in test equipment (BIT/BITE) and external test equipment that provides access to the system through external test points. The system has an on-line fault-isolation capability to one or two LRU's in 95 percent of all failures, and to one LRU in 85 percent of all failures. The remaining failures are isolated using external test and support equipment. System faults are displayed at the NASM, AT supervisor, and AF maintenance positions. Alarms are only sounded at the maintenance position which is connected to the supporting maintenance control center (MCC).

b. VSCS Contractor Support. VSCS contractor support is provided in many different forms such as engineering or technical, software, training, and maintenance support which are defined in subparagraphs 91d(b) and 91e. VSCS contractor support, at the site, starts with the installation of the VSCS transition switch.

91. MAINTENANCE CONCEPT. The VSCS is initially maintained by the VSCS production contractor for 1 year following CAI, in accordance with Order 6030.45A, with options for continued VSCS contractor support (including maintenance support), if ordered by the Government. VSCS support transitions to AF and AML, as approved by the AAF-1 and AML-1, and is specified in the VSCS MRD. For planning purposes, this support transition is projected to occur 1 year after CAI at each site. Maintenance support is guided by Order 6000.30B, Policy for Maintenance of the NAS Through the Year 2000, which establishes a two-level concept of maintenance: site and depot. The two-level maintenance concept assumes the use of modular equipment that enables technicians to correct a majority of equipment failures onsite by replacing faulty LRU's.

a. Site Maintenance. The MRD and MMP specify and define VSCS maintenance policy. Site level VSCS maintenance is accomplished by AF technicians or VSCS contractor support onsite where the equipment is located. Site level VSCS maintenance activities consist of preventive and corrective maintenance, repair, and certification (see subparagraph 92h) actions required to maintain the equipment in a fully operational status. The scope of VSCS maintenance to be performed at the sites is described in the VSCS Contract Maintenance Plan (VP 54). After CAI, onsite VSCS contractor maintenance support of the VSCS is provided 24 hours per day, 7 days per week for the first

operational year. During this period, FAA personnel may, under the technical direction of the VSCS contractor, perform the necessary coordination, assist with fault isolation, and run confidence tests. Qualified FAA personnel certify the system.

b. Depot Maintenance. Depot-level VSCS maintenance is the responsibility of AML and may be accomplished by the FAA or VSCS contractor personnel at a central location. Support consists of those activities performed on material requiring major overhaul or a complete rebuild of parts, assemblies, subassemblies, and end items. This support includes the fabrication of parts, modifications, testing, reclamation, repair, alignment, and calibration of equipment and LRU's that require specialized equipment and procedures, whether performed by contractors, other Government activities, or AML work force. Failed LRU's are forwarded to the AML or, if directed, directly to the supporting VSCS contractor's facility for replacement in accordance with the approved VSCS Contract Maintenance Plan (VP 54). AOS-500 and AML ensure that VSCS contractor plans and procedures are consistent with established FAA standards and procedures. The depot tests LRU's to determine repairability and performs repairs. All items repaired at the depot are placed in the supply system to fill support requirements. Non-repairable LRU's are either cannibalized or scrapped as authorized by existing orders.

c. Transition to FAA Maintenance. Transition to FAA maintenance support at the VSCS sites is planned to occur 12 months after CAI. In accordance with Order 6030.45A, the following minimum actions must be completed at each site before the VSCS contractor's onsite maintenance responsibilities are terminated and the FAA AF sector personnel assume full maintenance responsibility for the VSCS.

(1) A VSCS CAI for maintenance of the VSCS equipment must be satisfactorily completed and signed by both the FAA (AF sector) and VSCS contractor onsite representatives. The JAI checklist may be used as a guide for this inspection/acceptance. Exceptions (i.e., authorized modifications not yet completed, etc.) are noted on the report, with status recorded and action assigned. Copies are given to both the VSCS contractor and AF sector manager. The onsite copy is placed in the VSCS FRDF for permanent reference purposes.

(2) An inventory of FAA and VSCS contractor-owned spares is accomplished to ensure that a full complement of VSCS spares, to include LRU's and consumables, is on hand at each site at the time of maintenance transition. Paragraph 94 provides additional details regarding supply support.

(3) An inventory of VSCS contractor-owned test equipment or tools, to be turned over to the FAA at each site, is made and appropriate ownership documents completed.

(4) VSCS contractor maintenance support personnel, who are leaving the VSCS site when the contractor maintenance responsibility is terminated, shall surrender any security badges, vehicle tags, etc.

(5) All onsite FAA AF hardware and software technical personnel assigned to perform or manage VSCS maintenance must have completed assigned training and have appropriate certification credentials.

(6) A VSCS JAI for maintenance of the VSCS equipment must be satisfactorily completed, in accordance with Order 6030.45A, and signed by both the AF sector and VSCS QRO. Exceptions (i.e., authorized modifications not yet completed, etc.) are noted on the report, with status recorded and action assigned.

d. FAA Second-Level Engineering Support. AOS-500 is responsible for field support and manages the development and distribution of all VSCS certification and maintenance procedures. AOS-500 is also responsible for receiving modifications and preparing EEM's or STB's. AOS-500 develops modifications to the baselined system based on CCD's using either in-house resources or VSCS contractor support.

(1) Software Maintenance and Support. The FAA and VSCS production contractor have software maintenance and support responsibilities.

(a) FAA Responsibilities. The FAA assumes management responsibility for ARTCC/ACF support as each VSCS is accepted. Responsibility for managing depot-level maintenance support is assumed by AML 1 year after CAI at the first operational site. This management responsibility is incumbent upon the FAA, whether the VSCS is maintained by the FAA or VSCS contractor personnel. AOS-500 is responsible for the development and field support of documented VSCS-developed software and issues procedures to ensure adequate regulation of this process. These procedures are issued prior to VSCS delivery at the first operational site.

1. Functional responsibility for software support for the operational sites is accomplished by AF technical personnel in accordance with AOS-500 developed procedures. The actual software for doing the data base is maintained by AOS.

No changes to an operational program can be done at the site, because compilation tools will not be provided to the sites. The site AF personnel will be responsible to maintain and trouble-shoot data base problems, but not software program problems.

2. The responsibility for onsite data base management tasks, such as generating and entering the data, updating and maintaining site configuration maps, maintaining master lists of telephone and radio terminations, generating TSR's, and testing and validating changes, is performed by designated AF or AT personnel. VSCS contractor-developed AT data base management training is provided in accordance with the Statement of Work (SOW) paragraph 3.9.2.3.1. The AF site maintenance personnel are responsible for troubleshooting, maintenance, and repair of the site data base hardware and software. VSCS contractor-developed AF maintenance training is provided as required by SOW paragraph 3.9.2.4. ASM and ATR develop and issue applicable instructions before VSCS delivery at the first site.

(b) VSCS Contractor Responsibilities.

1. AOS Support. The VSCS contractor furnishes software maintenance and software technical support to the VSCS and its accompanying ACT support facility, CTSU, and VCET's. This support is provided through all incremental releases, updates, and problem resolutions as described in SOW paragraphs 3.3.2, VSCS maintenance support software, and 3.15.1.3, AOS VSCS contractor software maintenance services. The support is furnished by the VSCS contractor's technical personnel located at both the VSCS contractor's facility and ACT. These personnel are software engineers and programmers who are fully trained in the maintenance of the VSCS software.

2. AML Support. Support is provided for the automatic test equipment (ATE) and test program set (TPS) software as ordered. Software problem analysis and verification is also furnished in conjunction with hardware maintenance support.

3. Operational Sites Support. Software problem analysis and verification is furnished at the operational sites.

4. Commercial Software Support. CAS products released from the VSCS contractor to AOS-500 for testing, integration into the operational system, and release to the field are the responsibility of the VSCS contractor per the Request-for-Proposal (RFP), Section H.35, Commercial Software, as described in the following subparagraphs:

a. The VSCS contractor provides commercial software licenses for all software required under the contract.

b. The FAA is allowed to prepare backup copies of commercial software without restriction.

c. Commercial software may require updates and design modification (corrective performance improvement and minor enhancement maintenance). This is accomplished by the VSCS contractor upon FAA approval.

d. If changes to the commercial software are made, the VSCS contractor, at the direction of the FAA, provides and installs the updated version of the software to all previously delivered, undelivered, and future installations.

e. The VSCS contractor's responsibility for maintenance of the commercial software begins with the furnishing of the software and continues throughout the life of the VSCS contract. If the VSCS contractor discontinues support and leasing arrangement for VSCS software, the then-current version of the software being used becomes the property of the FAA.

f. If the VSCS contractor is unable to provide commercial-source software and documentation due to proprietary data restrictions, the material is placed in escrow and provided to the FAA when the VSCS contractor is no longer able to provide software maintenance support to the FAA.

e. VSCS Contractor-Provided Services.

(1) VSCS Contractor Engineering Services at ACT. The VSCS production contractor provides VSCS software maintenance and technical support to ACT, and problem analysis and verification to AML and operational sites. VSCS contractor-provided engineering services include:

(a) Assist in operation of the VSCS.

(b) Resolve VSCS user and interface problems.

(c) Verify VSCS requirements to the user.

(d) Provide engineering assistance in software loads and configuration map data base updates.

(e) Support Government RMA testing.

(f) Provide informal on-the-job training on the VSCS hardware and software.

(g) Design and test of software and hardware modifications to the VSCS.

(2) VSCS Contractor Engineering Services at AMC. VSCS contractor engineering services will, as a minimum, resolve VSCS user and interface problems, verify VSCS user requirements, provide engineering assistance in software loads and configuration map data base updates, support Government RMA testing, and provide informal on-the-job training on the VSCS hardware and software. These services commence beginning with CAI of the VSCS at AMC.

(3) VSCS Contractor Engineering Services at the Operational Sites. The VSCS contractor-provided engineering services include, as a minimum, resolution of VSCS user and interface problems, verification of VSCS requirements to the user, engineering assistance in software loads and configuration map data base updates, support of Government system shakedown and RMA testing, and informal on-the-job training on the VSCS hardware and software. The scope of the informal on-the-job training is oriented toward system repair and certification (see subparagraph 92h). These services commence upon CAI of the VSCS at each operational site.

(4) VSCS Contractor Supplemental Support Services at the Operational Sites. The VSCS contractor-provided supplemental support services include assistance in configuration map data-input preparation, interpretation of site preparation, and analysis of activation requirements such as communications support requirements. These services begin with the SAS at each operational site which is scheduled to commence no later than 15 months before VSCS equipment delivery (see schedule in appendix 3).

(5) VSCS Contractor Technical Support. The VSCS RFP contains options for VSCS contractor technical assistance for hardware and software maintenance. If exercised by the FAA, this optional support will be provided to the AOS-500. The option provides for the following:

(a) Establishment of a "hot line," toll-free telephone advisory service on a 24-hour per day basis. This service is staffed by the VSCS contractor to provide expert assistance to AOS-500 within 15 minutes after a request is received.

(b) Establishment of a technical assistance capability to provide onsite assistance by a fully qualified VSCS contractor technician within 24 hours after a request for assistance is received.

92. TRAINING.

a. AF Training. Initial training of all AF personnel is conducted by the VSCS contractor. The VSCS contractor begins AF training at the contractor's facility in Melbourne, FL. The first four to six classes are at the VSCS contractor's facility beginning the fall of 1993 in accordance with the published delivery schedule in appendix 3. Using the AMC training system, the VSCS Program Office plans to transition training from the VSCS contractor's facility to AMC in the spring of 1994. The VSCS Program Office, AAP-400, working with AHT-400, ASM-250, and the rest of the AF training team, ensures that all training activities are initiated early enough to allow sufficient personnel to be qualified before participation in site or system certification. Training is scheduled to be completed by ORD plus 1 year for each site. Detailed AF training program information is contained in the VSCS subsystem training plan (STP). The ATZ-developed plan is entitled, "Generic VSCS Site Transition Training Implementation Plan," dated March 1, 1993.

(1) AF Maintenance Training. Before personnel may attend VSCS AF courses, they must complete the following prerequisites: 47402 (Fundamentals of Computer Software); 40406 (Fundamentals of Computer Hardware); 47404 (Fundamentals of Data Communications); or have demonstrated equivalent knowledge. Table 9-1 shows the train-by-milestone requirements as documented in the MRD. The four AF courses described below are: NASM, hardware maintenance, site software support, and VSCS Support Facility (VSF)/Software Development System (SDS) software support. Table 9-2 shows the estimated duration of each course.

(a) NAS Manager (NASM) Course. NASM's, system engineers, assistant system engineers, NAS specialists, AMA instructors, and regional office engineers attend the NASM Course. These courses provide training in:

1. VSCS theory of operations.

TABLE 9-1. NUMBERS OF AF PERSONNEL TO BE TRAINED

| COURSE | VSCS DEL | CAI | IOC | ORD | ORD+1 YEAR |
|---|---|---|---|---|---|
| NAS MANAGER | 5 | 7 | 10 | 14 | 21 |
| AF MAINTENANCE TECHNICIAN | 2 | 5 | 7 | 9 | 9 |
| AF SOFTWARE SUPPORT (includes AF DEO) | 1 | | 2 | | 2 |

TABLE 9-2. AF COURSE LENGTHS

| COURSE | COURSE NUMBER + | DURATION |
|---|---|---|
| NAS MANAGER | 40289, 49242 | 10 Days |
| AF MAINTENANCE TECHNICIAN | 40272, 48171 | 55 Days |
| SITE SOFTWARE SUPPORT (includes AF DEO) | 40273, 48172 | 65 Days |
| AF VSF/SDS SOFTWARE SUPPORT: | | |
| o SOFTWARE LANGUAGES | | As Required |
| o SOFTWARE SUPPORT | | 63 Days |
| o AF VSCS UNIQUE SOFTWARE | | 62 Days |
| o ON-THE-JOB TRAINING | | As Required |

+ First Number = Identifies the course conducted by the FAA Academy
Second Number = Identifies the course conducted by Contractor

2. Block level physical and functional descriptions of hardware, software, and system interfaces.

3. Performance of reconfiguration tasks, diagnostic checks, and maintenance procedures for the VSCS and peripheral devices.

(b) AF Hardware Maintenance Course. AF hardware maintenance technicians, journey-level personnel, staff engineers, assistant managers for technical support, AMA instructors, and AML and regional office engineers receive component-level theory and hands-on experience in the AF Hardware Maintenance Course. These courses allow attendees to:

1. Function in the console and maintenance operator positions.

2. Understand the functional operational characteristics of the VSCS, including all system software input and output.

3. Understand the network hardware and software architecture and concepts.

4. Understand the internal hardware and software design of the VSCS subsystems.

5. Perform preliminary operational tests and periodic performance tests.

6. Perform preventive maintenance tasks.

7. Execute diagnostic and error reporting modules.

8. Analyze error and configuration messages.

9. Conduct fault isolation procedures and perform corrective maintenance to the LRU level.

10. Adjust performance parameters, and perform data-entry position functions.

11. Perform reconfiguration tasks.

12. Perform safety and emergency procedures.

13. Perform AF DEO functions.

(c) Site Software Support Training (Level 1). Field engineers, supervisors, AMA instructors, and ARTCC systems performance specialists (SPS) attend the Site Software Maintenance Course. These courses provide site software training in theory of operation, hands-on experience, and the skills and knowledge to isolate problems, install software, and perform CM procedures.

(d) ACT VSCS Support Facility (VSF)/Software Development System (SDS) Training (Level 2). ACT personnel are trained to understand the functionality of the VSCS hardware at the system level. Training also allows course graduates to:

1. Update and maintain site unique data bases.

2. Generate site configuration maps.

3. Write, debug, and execute VSCS operation and maintenance programs using the high order language and system specific software associated with the VSCS.

4. Analyze, modify, debug, reassemble, or compile source software.

(e) Depot Training. As an option to the Government, the VSCS contractor may also provide informal on-the-job training assistance to AML repair technicians. Training requirements are determined by AML prior to the time the FAA assumes depot-level repair functions.

b. AT Training. AT training has been coordinated by the VSCS Program Office, AAP-400, with ATZ-100, AHT-500, and ATR-320 to ensure that AT training fully meets AT community needs.

(1) AT Cadre Training. Training for the FAA AT cadre from each site is conducted in-part on the VCET by the VSCS contractor at the operational site. AT training is conducted in two phases: the first phase is accomplished on the stand-alone VCET's and the second phase on the M-1 DYSIM environment for transition training (additional training will be provided on the ISSS DYSIM environment). The VCET's are delivered simultaneously with the VSCS equipment delivery. Commencement of training follows approximately 1 month after VCET installation and checkout. Each operational site determines who makes up their AT cadre, which is limited to 12 people per operational site. The site cadre trains site controllers, supervisors, and area managers beginning approximately 2 months after VSCS/VCET delivery, and develops and conducts the DYSIM training.

All required AT training is completed by IOC. Two hours proficiency training per month for each person is required when more than 30 days have elapsed without performing on the VSCS equipment. Detailed AT training program information is contained in the VSCS STP, which is titled, "Generic VSCS Site Transition Training Implementation Plan." This plan includes classroom training for the AT cadre and AT operational personnel. Course information is contained in tables 9-3 and 9-4. During the time between CAI and IOC, a minimum of 40 days is required for DYSIM training on the VSCS which may distract from available testing time on the system.

(2) ATC Specialist (ATCS) Training. The ATCS Course includes theory and hands-on experience to provide the necessary information, skill development, and practical application required to allow controllers to operate the VSCS. Instruction, using the VCET's, is given on selecting primary and alternate methods for A/G and G/G communications functions; how to locate, identify, and select communications links for inter- and intra-facility; and how to perform selective primary and ancillary communications tasks, keyboard interface functions, and override functions, followed by DYSIM scenarios using VSCS as a communications control.

(3) AT Supervisors' Training. After completing the AT Controller Course, the AT Supervisors and Area Managers Course provide hands-on training to allow supervisors and managers to perform all AT controller tasks as described in subparagraph 92b(2), reconfigurations, communications recording tasks, and frequency assignment/management functions available through the VSCS managerial position. Supervisors and area managers receive the ATCS DYSIM training.

(4) AT Data Base Management. The AT Data Base Management Course (AT DEO), conducted onsite, provides training necessary to update and maintain site unique VSCS data bases and generate VSCS site configuration maps. Student population is comprised of AT Plans and Programs and ATC specialists who have completed the ATCS and Supervisor Courses.

c. Overview Training. In addition to the AF and AT training outlined in subparagraphs 92a and 92b, the VSCS production contractor has developed VSCS overview materials for selected FAA managers, supervisors, and engineers. This training provides a top-level overview of the VSCS equipment, system-level functions, VSCS contractor installation and testing procedures, and special requirements necessary for coordinating the

TABLE 9-3. AT COURSE REQUIREMENTS (per site)

| COURSE | STUDENT | POP. TOTAL | TRAINING MILESTONES |
|---|---|---|---|
| Cadre | Sites/ AMC | 12 | VSCS Delivery + 1 month |
| AT Control Specialist | ATCS & AT Control Supervisor (SATC) | All | IOC |
| Supervisor/ Area Manager | SATC | All | IOC |
| DEO (AT) | AT - Specialist/ AMC | 2 | IOC |

TABLE 9-4. AT COURSE DURATIONS

| COURSE | DURATION |
|---|---|
| ♦ Cadre | 5 Days |
| ♦ Air Traffic Control Specialist (ATCS) | 3 Days+ |
| ♦ AT Control Supervisor (SATC) | 1 Day♣+ |
| ♦ AT DEO | 5 Days |

♣ The ATCS Course is a prerequisite for this course.
\+ The AT Cadre and AT DEO will get both of these courses.

installation and testing efforts. The System Overview Course is provided on video tape with accompanying materials. Its estimated course length is 4 hours.

d. OT&E/SST Training. The VSCS production contractor provides training for FAA OT&E/SST personnel at its Melbourne, FL, facility to operate and maintain the VSCS during OT&E and SST at ACT. The OT&E and SST staff, organized under the supervision of ACN-200 and AOS-350, consists of approximately three classes of 12 AF maintenance personnel from ACT and selected field representatives, eight classes, of 12 AT field personnel as test subjects, three classes of DEO's, and the SST Team (11 AF personnel proposed to attend the formal AF training). Training includes theory and hands-on experience utilizing the core curriculum materials (CDRL - VP 82) described for AT controller and AF maintenance technician training. Course durations are shown in table 9-5.

TABLE 9-5. OT&E/SST TRAINING DURATION

| | COURSE | DURATION |
|---|---|---|
| **AF MODULES** | Tandem H/W | 12 class days |
| | Tandem S/W | 12 class days |
| | VSCS Unique | 17 class days |
| | AF DEO | 5 class days |
| **AT MODULES** | ATCS | 3 class days |
| | SATC | 1 class day |
| | AT DEO | 5 class days |

e. Initial VSCS Contractor Training Responsibilities. Detailed VSCS contractor training responsibilities are contained in the VSCS SOW. Initial VSCS contractor training:

(1) Provides training for FAA personnel and TOR's to perform site acceptance of VSCS equipment.

(2) Conducts AF training classes, after approval of course materials by the FAA and as directed by the FAA.

(3) Conducts AT controller cadre training after approval of course materials by the FAA.

f. Attrition Training. The AHT approves and the ATR and ASM concur with the recommendation for changes to the approved curriculum. Then AMA proceeds with the revision and conduct of VSCS attrition training.

g. Training Documentation. Each student, including the Cadre, will receive an individual set of training materials that include the student guide and any other designated manuals. Any materials/manuals referenced in training and designated for the site delivery (CDRL's VP 71 and 72) will be available in class. A Quick Reference Card is included in the AT Controller manual. The VSCS contractor provides the training documentation listed in subparagraphs 92g(1) through 92g(4) and in paragraph 95. The delivery schedules for these documents are provided in the VSCS contract.

(1) Job VSCS Task Analysis (CDRL - VP 80).

(2) Contract Training Plan (CDRL - VP 81).

(3) OT&E/SST Training Materials (CDRL - VP 82).

(4) Curriculum and Instructional Media Materials (CDRL - VP 83).

h. Certification. The VSCS is an integrated system providing both A/G and G/G communications. Order 6000.15B, General Maintenance Handbook for AF, requires that all systems providing A/G communications between pilots and AT personnel must be certified. Certification is the technical verification that a system, subsystem, or equipment is providing the required service to the user (ATC personnel and the flying public) at any given time. It includes the Government's determination as to when a system, subsystem, or equipment is continued in, restored to, or removed from use. Certification of VSCS equipment is accomplished by FAA personnel in accordance with Order 4453.2A, FAA Quality Control System Certification Program (a more detailed discussion of certification is contained in the MMP).

(1) Certification of FAA Personnel. Certification of FAA personnel is accomplished in accordance with Order 3400.3E, AF Maintenance Personnel Certification Program.

(2) Certification of VSCS Equipment. The A/G component of the VSCS is the only portion that requires certification. FAA personnel are responsible for certification and certification procedures. Procedures are developed and issued by AOS-500 3 months prior to the first VSCS delivery at an operational site (see schedule in appendix 3).

93. SUPPORT TOOLS AND TEST EQUIPMENT.

a. Common Tools and Test Support Equipment. The VSCS contractor has identified the common tools, test/support equipment, interface devices, and connectors required for maintaining the VSCS. The requirements for these items, along with the VSCS contractor's recommended listings of equipment that satisfy these requirements, have been forwarded to the FAA. The FAA reviews and approves the acquisition, as required, to support site, depot, and ACT maintenance levels. The equipment listings and delivery schedule are provided in accordance with Logistic Support Analysis (LSA) Incremental Delivery (CDRL - VP 50).

b. Special Tools and Test Equipment.

(1) Special tools, special test/support equipment, and interface devices required to support the VSCS are held to a minimum. When special tools or test equipment are required for initial adjustments, testing, and/or maintenance of the VSCS, they are provided by the VSCS contractor. Special tools, test/support equipment, and interface devices required for routine and special maintenance of the VSCS are detailed in the VSCS contractor's LSA plan (LSAP; CDRL - VP 49) and approved by the Government prior to acquisition. A listing of special tools and test equipment is delivered in accordance with VP 50.

(2) If ordered by the Government, the VSCS contractor will deliver, to each supporting workcenter, one complete set of special tools and test equipment, including spares, connectors, adapters, and all other items required to permit utilization of test equipment with VSCS hardware. These items will be onsite or at the supporting workcenter prior to acceptance of the supported VSCS. The VSCS contractor will also supply standard test equipment, if ordered by the Government.

c. Depot Tools and Test Equipment.

(1) Depot Special Tools and Test Equipment. Depot special tools and test equipment will be procured prior to Government acceptance of responsibility for depot-level repair support for the VSCS.

(2) Depot Automatic Test Equipment (ATE). The FAA has the following ATE in its inventory for use in depot-level maintenance of the VSCS:

| MODEL | MANUFACTURER | TYPE TESTER |
|---|---|---|
| 635 | FACTRON | In-Circuit Tester |
| 9010 | Fluke | Microprocessor Emulator/Tester |
| 2272 | Genrad | Bed-of-Nails 1024 PINS |
| 2620 | Genrad | 64-Pin In-Circuit Tester, Protocol Tester |
| 3065 | Hewlett-Packard | In-Circuit Tester |

(3) The AML intends to use the Genrad 2272 as the ATE for depot-level support. As the state of the art progresses and better ATE is developed and procured for the depot, other ATE may be preferred.

d. Calibration of Tools and Test Equipment. Maintenance and calibration requirements for all special tools and test equipment are identified by the VSCS contractor in the appropriate LSA Record (LSAR). Calibration requirements for the VSCS are contained in appropriate instruction books.

94. SUPPLY SUPPORT. The AML manages supply support for the VSCS. While the VSCS contractor is providing VSCS support, the quantity of site spares is determined by the VSCS contractor using appropriate spares modeling techniques in accordance with VSCS contract requirements. The provisioning conference validates depot spares to be procured to accomplish the transition from VSCS contractor to FAA maintenance. The VSCS contractor recommends VSCS spares to the LRU level and depot parts-peculiar to the FAA for review and approval. Spares data is available to the FAA in accordance with a schedule to be determined at the logistics guidance conference. Supplies and material required for support of the VSCS are stocked as discussed in subparagraphs 94a and 94b.

a. Site Stocks. An inventory of site stocks are located at the same location as the equipment to be supported. These stocks are limited to remove and replace items, such as spare LRU's and low-dollar expendable supplies for maintaining those items that are authorized to be repaired at the site.

b. Depot Stocks. The AML or VSCS contractor depot, as applicable, stocks an inventory of backup stocks for items stored and used at the sites. The depot serves as a source for safety stock items that are maintained for parts not expected to fail frequently enough to justify stock at lower levels but that are critical in avoiding extended maintenance downtime. The depot also maintains an inventory of items not authorized for stockage at lower levels because of cost or limited assets. The depot also has an inventory of items necessary to support its internal maintenance activity with repair parts.

c. Packaging, Handling, Storage and Transportation (PHS&T). PHS&T is accomplished using best commercial practices. PHS&T details are contained in the VSCS Production Contract, section D.

(1) Equipment and parts shipped directly by the VSCS contractor to VSCS sites for immediate use or installation are packaged and marked in accordance with ASTM-D3951-82, Standard Practice for Commercial Packaging.

(2) System equipment sent to the AML for storage is individually preserved and packaged to Level A and packed to Level B in accordance with MIL-E-17555, Electronic and Electrical Equipment, Accessories, and Repair Parts. Packaging and packing of spare parts, excluding common hardware, is individually preserved and packaged to a Level A and packed to Level C in accordance with MIL-E-17555. Common hardware is packaged in unit pack quantities that are normally supplied through retail trade channels. Bulk quantities are not acceptable. All containers are marked in accordance with MIL-STD-129, Marking for Shipment and Storage, and MIL-STD-1189, Standard DOD Bar Code Symbology.

d. Transportation.

(1) The VSCS contractor is responsible for providing material handling equipment (MHE) and resources for the on-loading, blocking, and bracing of items to be shipped on carrier equipment. The VSCS contractor is also responsible for onsite loading and transportation of personnel and material associated with the installation of the VSCS equipment. The VSCS contractor is responsible for the transportation and costs associated with moving VSCS equipment to, from, and between locations for testing and/or demonstrational purposes. Transportability is a design consideration and objective throughout all phases of the system equipment effort.

(2) The AML or VSCS contractor, as appropriate, ensures that materials processed through the depot warehouse in support of the VSCS are routed and transported by means that are consistent with established Department of Transportation (DOT) guidelines.

95. VENDOR DATA AND TECHNICAL MANUALS. The VSCS contractor develops all technical data and documentation, including AT and AF training materials, for the VSCS. Delivery of the data and documentation is scheduled to support system deliveries and acceptance requirements. The specific delivery schedules are shown in the VSCS RFP CDRL's available in the production contract, attachment J2. During the operational life cycle of the VSCS, AOS-500 is responsible for maintenance, updates, and release of technical (hardware, software, firmware) documentation to the field sites; AML is responsible for engineering drawings, provisioning technical documentation (PTD) and LSA/LSAR data; and AMA is responsible for training documentation. Applicable systems maintenance documentation is available to each site prior to and after CAI. The VSCS contractor provides the technical documentation listed in subparagraphs 95a through 95h.

a. Provisioning technical documentation on the LSA-061 Report, Parts Master File.

b. Test documentation.

c. Interface control documents (ICD) for each external interface, to include hardware and software.

d. Computer System Operator's Manual (CDRL - VP 68), and Software User's (CDRL - VP 87) and Software Programmer's Manuals (CDRL - VP 88).

e. Detailed custom software design and system documentation.

f. Training documentation.

g. Hardware Technical Manuals and Publications (CDRL - VP 72).

h. Engineering drawings (VPs 69 and 69A).

(1) VSCS engineering and installation drawings are delivered in commercial and Government entity (CAGE)-compatible, AUTO-TROL series 5000 format to AOS-500, AML, and the regions, as appropriate.

(2) Level Two drawings are provided to the LRU level.

(3) Level Three drawings are provided for LRU's and items designated as parts-peculiar.

(4) Included in submitted drawings are the following:

(a) Shop drawings for site installation.

(b) Master pattern and plan view of parts layouts.

(c) Engineering schematic drawings.

(d) Individual diagrams for integrated circuit devices.

(e) As-built installation drawings.

96. EQUIPMENT REMOVAL. Issuance of decommissioning, removal, and disposal instructions for FAA-owned equipment replaced by the VSCS is the responsibility of AAP-400. Disposal instructions will be issued in accordance with Orders 6030.45A, 1350.14 (Records Management), 4660.1 (Real Property Handbook), and 4800.2B (Utilization and Disposal of Excess and Surplus Personal Property). The disposition of leased equipment is the responsibility of the lessor. Detailed equipment removal procedures are contained in site specific plans.

97. FACILITIES. The VSCS contractor must examine existing FAA maintenance support facilities and recommend requirements for new or expanded facilities to support the VSCS. Requirements for new or expanded facilities will be brought to the attention of the Government as soon as possible and documented on the LSAR Data Record and the Depot Maintenance Study (CDRL - VP 47). No special responsibilities have been assigned to the Government for designing, developing, or acquiring support facilities. The Government supplies space for support of the installation effort at each ARTCC/ACF receiving a VSCS.

98. NAILS PLAN. The NAILS Plan, referred to as the ILSP, in conjunction with the MMP for the VSCS, provide planning and execution guidance for VSCS ILS throughout its life cycle. The ILSP and MMP are evolving documents that will be updated as support requirements change. The ILSP includes a description of the NAILS program elements and identifies responsibilities for providing and managing their execution in support of the VSCS Program (see subparagraph 56b). The MMP documents the concepts and program decisions affecting maintenance of the VSCS

identifying responsibilities for managing actions required to support VSCS in accordance with NAILS policies (see subparagraph 56i).

99. RESERVED.

# CHAPTER 10. ADDITIONAL PROJECT IMPLEMENTATION ASPECTS

100. VSCS CONFIGURATION MANAGEMENT (CM). CM is the process used to identify and document the functional and physical characteristics of a configuration item. CM also controls changes to those characteristics, records/reports change requests and change implementation status, and audits documentation and configuration items to ensure the adequacy of any particular baseline being established.

a. During the production phase, and for the entire life cycle of the VSCS, CM functions consist of maintenance and change control of the generic ARTCC/ACF end-state drawings (VPs 69 and 69A), the site-specific end-state equipment layout drawings, and the VSCS product baseline as established subsequent to a successful VSCS first-article PCA.

b. As stated in Order 1320.48B, Engineering Field Support Sector Maintenance Program Procedures, responsibility for maintaining the VSCS baseline configuration is assumed by the AOS-500. After completion of system acceptance at ACT, a PCA and the FCA are performed. In order to ensure a smooth and efficient transfer between the VSCS Program Office and the system maintainers, "hand-off" policy and procedures have been established and are outlined in Order 1800.8F.

c. A hand-off agreement between AAP-400 and AOS-500 in the form of a memorandum of agreement (MOA) was developed to allow AOS-500 adequate time for budgeting, scheduling, and training for CM-related activities. The time period that the hand-off occurs was determined prior to VSCS production contract award.

d. Guidance and procedures concerning the respective responsibilities for AAP-400 and AOS-500, prior and subsequent to the transfer of maintenance responsibilities, are contained in Order 1320.48B.

e. Applicable change request forms and change implementation documentation are as described in Order 1800.8F. As in the VSCS prototype phase, document change requests (DCR) and NCP's are utilized in the VSCS production phase to propose changes to the contract baseline. NCP's are required for CDRL-VP and IRD changes. A description of these forms and their usage can be found in the ASE-600 CM procedures, Order 1800.8F.

f. The VSCS production contract states that the VSCS contractor is responsible for VSCS change implementation until the final site acceptance. The VSCS contractor is responsible for updating the production CM plan to reflect new requirements as stated in the VSCS production SOW. New work requirements include the establishment and maintenance of the VSCS site configuration data through last site acceptance; procedures for interfacing with the Government (AOS-500) for approving change requests and implementing approved changes to the sites; and plan for and implement the transfer of their automated CM-related data to AOS-500 computer system(s).

g. Production phase milestones of concern to CM include the production critical design review (CDR), FCA, functional qualification review (FQR), PCA, DRR, first operational site acceptance (marking the transfer of CM responsibilities from AAP-400 to AOS-500), and last site acceptance, which marks the transfer of the VSCS contractor's CM-related data to AOS-500's computer system(s).

h. Once the SAS has been completed establishing the CM baseline, it is imperative for the sites to report any changes to the CM baseline to the VSCS contractor through AAP-420. All CM changes up through CAI must be documented. AAP-10/420 will work with the regions to establish the CM plan.

101.-109. RESERVED.

# APPENDIX 1. DEFINITIONS

1. CLASSMARK. Classmark is an object program code that enables or disables access to VSCS services and functions. A service classmark enables or disables the class of service with respect to a trunk circuit, mainly its signaling as defined by an interface control document (ICD) (CDRL - VP 41). An operational classmark enables or disables position access to VSCS communications capabilities.

2. COMMISSIONING. Commissioning is the formal placement of a facility, equipment, subsystem, or system into operational use or service into the NAS (see Order 6030.45A).

3. CONTRACT ACCEPTANCE INSPECTION (CAI). The CAI is the formal acceptance by the FAA of the VSCS equipment from the VSCS contractor. This inspection is accomplished onsite to verify the acceptability of the equipment delivered and its installation. CAI shall be conducted after completion of SAT of a facility, system, or equipment by the construction or installation contractor, when such testing is required (see Order 6030.45A). The VSCS acceptance is accomplished by the execution of FAA Form 256 at each site after initial testing. FAA Form 4500-1 will be initiated at the end of CAI at each site.

4. DEPLOYMENT READINESS REVIEW (DRR). The DRR is a structured assessment of the aviation system capital investment plan (CIP) projects and selected F&E and operations funded projects to support a deployment determination by the Associate Administrator for Airway Facilities and Associate Administrator for NAS Development. It defines the management process by which the VSCS Program Manager leads an FAA review to ensure that the project is ready to be integrated into the NAS and that the corporate FAA is ready to receive, utilize, and provide life-cycle support to the VSCS when deployed.

5. DEVELOPMENT TEST AND EVALUATION (DT&E). DT&E is that test and evaluation conducted primarily to assist the engineering design and development process by determining incrementally the degree to which functional engineering specifications are attained. DT&E includes test and evaluation of systems, subsystems, units, hardware, software, full-scale engineering models, and prototypes.

6. VSCS EQUIPMENT DELIVERY. The date when major electronic components are delivered to a facility. Peripheral components such as cables, console modification kits, etc., may be delivered prior to the VSCS equipment delivery.

7. FACTORY ACCEPTANCE TESTS (FAT). Acceptance testing that is performed on VSCS to verify that the systems operate in accordance with the VSCS Product Specification of VSCS requirements and that it is ready to be shipped and installed at ACT for further testing. That determination is made by the FAA after witnessing the tests and assessing test data.

8. FUNCTIONAL CONFIGURATION AUDIT (FCA). A formal audit, including review of test documentation and test results to validate that the development of a configuration item has been completed satisfactorily and that the configuration item has achieved the performance and functional characteristics specified in the functional or allocated configuration identification.

9. IEEE 802.3. A Carrier Sense, Multiple Access with Collision Detection (CSMA/CD) standard similar to Ethernet (trademark of Xerox Corporation). The standard defines the MAC sublayer for CSMA/CD and a corresponding physical layer for connection to a baseband coaxial cable. It is physically patterned after the Ethernet specification with certain options in the frame format. The address fields can be 16 bits long instead of Ethernet's 48 bits, but all addresses in a particular network must be of the same length. The 2-byte type field of Ethernet has been replaced by a 2-byte length field which designates the number of data bytes in the following message data field. Variations in the physical layer allow signaling rates of 1, 5, 10, and 20 Mbps. A multidrop coaxial cable segment is limited to 500 meters (with 100 stations) instead of 1500 meters in Ethernet, but there can be as many as five coaxial cable segments in an IEEE 802.3 system.[4]

10. INITIAL OPERATIONAL CAPABILITY (IOC). The joint declaration by AF and AT facility managers, in concert with responsible FAA headquarters and regional management, that the system (including hardware, software, and personnel) is physically and functionally capable of providing the intended service. This establishes the first time that the VSCS can be used to conduct limited air traffic control operations (see Orders 1810.4B and 6030.45A).

---

[4] Understanding Data Communications by George E. Friend, John L. Fike, H. Charles Baker, John C. Bellamy, dated 1987; Published by Howard W. Sams & Co.

18. OPERATIONAL TEST AND EVALUATION (OT&E). OT&E addresses operational requirements at the project and system level and is performed by FAA personnel. The test requirements are included in the OT&E and SST plans (see Order 1810.4B).

19. PHYSICAL CONFIGURATION AUDIT (PCA). A technical examination of a designated configuration item to verify that the configuration item "As Built" conforms to the technical documentation that defines the configuration item.

20. PRODUCTION ACCEPTANCE TEST AND EVALUATION (PAT&E). PAT&E is contractor-conducted test and evaluation of production items to verify that the procured items fulfill the requirements and specifications of the procuring contract (see Order 1810.4B). During this test phase, all production units are to be tested. Prior to each installation, the VSCS contractor conducts a PAT&E on each system to determine whether serial production items are the same quality, have the same technical and operational characteristics, incorporate specified improvements, and are consistent with items that have been previously tested and accepted according to specified requirements. The FAA witnesses, reviews, and approves the PAT&E.

21. PROGRAM DIRECTIVE (PD). A PD is an agreement negotiated between a Program Manager and an Associate Program Manager. The PD defines the work of tasks to be performed, the products or services to be delivered, the schedule, the management progress reports to be provided, and the fiscal resources to be supplied (see Order 1810.4B).

22. SITE ACCEPTANCE TESTING (SAT). SAT is formal, FAA-witnessed testing in which the contractor proves that the VSCS meets the site's functional requirements. SAT is the testing, checkout, and documentation which an installation contractor is required to accomplish and demonstrate to the agency that systems/equipment, installed by the contractor, meet contract specifications for installation and operation of hardware/software and integration with other systems. SAT demonstrates that the systems or equipment are capable of operating for a specified period without failure or error (see Order 6030.45A). VSCS SAT is conducted in a phased series of tests and reviews such as the test readiness review, VSCS closed-system formal testing, VSCS to GFE resource validation, and VSCS control room testing.

23. SITE INTEGRATION AND TEST. Site integration and test are tests conducted by the VSCS contractor at the field sites. These tests are conducted after the successful completion of site installation and checkout, and are a prelude to CAI.

24. SYSTEM REQUIREMENTS STATEMENT (SRS). The SRS document, when certified by the program manager and approved by the Administrator, defines the VSCS mission needs and provides an assessment of the needs in terms of capabilities, impact, benefits, costs, and approach.

25. SYSTEM SHAKEDOWN TESTING (SST). SST is the operational evaluation (AT operations, as well as AF maintainability and supportability issues) of the VSCS. This activity is accomplished as the last function of the OT&E effort at ACT, as defined in Order 1810.4B. SST is the verification process that becomes the basis for the decision to deploy VSCS to the field.

26. UNSCHEDULED MAINTENANCE ACTIONS. Any malfunction which is either an operational mission failure or results in any unscheduled corrective maintenance action. All operational mission failures are considered unscheduled maintenance actions even if negligible time is actually required for corrective maintenance.

27. MISSION ESSENTIAL FUNCTIONS. Functions that the system must be capable of performing in order to accomplish its mission tasks in an acceptable manner.

28. SYSTEM FAILURES (per VSCS Product Specification). Operational Mission Failure (Critical Failure) - Any incident or malfunction of the system, excluding software defects, which the ATC controller/maintenance crew cannot remedy or repair or reconfigure using the controls, authorized test equipment and tools within a specified time, and which causes one or more of the following:

a. Inability to continue, commence, or cease operation.

b. Inability to accomplish any of the mission-essential functions.

c. Loss of any process essential to any function even though not essential to the specific mission in progress.

d. A critical or catastrophic hazard to personnel or equipment as defined by MIL-STD-882A.

e. Loss of mission-essential functions caused by improper operating or maintenance instructions or inadequate test, measurement and diagnostic equipment (TMDE) or support equipment.

11. FAA INTEGRATION TESTING AND EVALUATION (IT&E). The critical period of OT&E that is accomplished after the FAA takes responsibility for the VSCS hardware and software from the VSCS contractor. IT&E is the operational evaluation (AT operations as well as AF maintainability and supportability) of the VSCS. This activity is accomplished between CAI and the declaration by facility management of VSCS IOC. IT&E is the verification process that becomes the basis for a declaration of IOC (see Order 1810.4B).

12. JOINT ACCEPTANCE INSPECTION (JAI).

a. The JAI (see Orders 1800.8F and 6030.45A) is an activity to gain consensus of all involved groups that the VSCS implementation is completed in accordance with national criteria such as applicable standards and specifications and the system is capable of operating in the NAS, providing the services required within established standards and tolerances. JAI normally occurs when the custody and/or maintenance responsibilities of facilities/equipment are transferred from the establishment/ installation group to the office responsible for maintenance. A JAI shall be performed before a new, improved, or relocated facility, system, or equipment is accepted for maintenance and/or operation on a commissioned basis in the NAS. In the VSCS Program, a final JAI is accomplished prior to declaring the operational readiness date.

b. A partial JAI is the incremental conduct or intermediate step of a JAI. This method of acceptance permits a manageable progression of the project to a final JAI, when the facility is providing all of its intended functions. This permits the transfer of custodial and protective responsibilities for portions of the facility completed to the AF sector. The status of the portions of the facility and equipment accepted are documented in the partial JAI report. All requirements of the final JAI shall be applicable to each partial JAI.

13. LINE REPLACEABLE UNIT (LRU). An item which may consist of a unit, an assembly (circuit card assembly, electronic component assembly, etc.), a subassembly, or a part, that is removed and replaced at the site maintenance level in order to restore the system/equipment to its operational status without using any special tools (see Order 4560.1B, Policies and Procedures Covering the Provisioning Process During the Acquisition of FAA Materiel).

14. MASTER TEST PLAN (MTP, CDRL - VP 73). The Master Test Plan is an overall test planning document. Its scope covers test phases, specific time frames, and locations of testing. Its contents include categories and types of tests for the entire scope of the project. Elements of the MTP define the organization, policies, objectives, and methods to be used in implementing an effective testing program.

15. OPERATIONAL READINESS DEMONSTRATION (ORD). The ORD is an activity, as a part of the JAI, conducted by the FAA at a field test site that documents that the facility, system, or equipment is ready to support real-time AT control tasks and the readiness of personnel, procedures, hardware, software, and support services to support these tasks. The facility, system, or equipment shall have been examined or inspected as necessary to ensure that final refinement of operational parameters, procedures, methods, and adaptation has been accomplished, and the facility, system, or equipment is ready to be placed into operational use (see Order 6030.45A).

16. OPERATIONAL READINESS DATE. The point in time when facility management (AT and AF) formally and jointly declares that the VSCS and the facility operations staff have met all agency criteria for the continued full-time use of the VSCS (see Order 6030.45A). It is the date (see Order 1810.4B) that the ORD is completed and the date on which a new or improved facility or system satisfies FAA JAI construction, installation, performance, operation, and maintenance criteria and is ready to be placed into operational use or commissioned.

17. OPERATIONAL SHAKEDOWN. Operational or field shakedown (see Orders 1810.4B and 6030.45A) occurs at the operational site, after contractor-conducted SAT and CAI and prior to ORD, and is part of the overall ORD that leads to and concludes with the operational readiness date. It is that critical period of testing which is accomplished after the FAA takes full responsibility for a system and software from the contractor. The purpose of operational shakedown is to demonstrate that the VSCS can be used effectively in the operational ATC environment and that facility personnel can support VSCS operations. These activities are defined in Orders 1810.4B and 6030.45A, and are called JAI.

29. EQUIPMENT OR ITEM FAILURE. Equipment or item failure is when any part of an item does not perform as required by its performance specification after it has been installed and determined to be operable prior to the event. Other types of failures as described in the VSCS Product Specification:

a. Catastrophic Failure - Failure that is both sudden and complete.

b. Complete Failure - Failure resulting from deviations in characteristics beyond specified limits such as to cause complete lack of the function.

c. Critical Failure - A failure that is likely to result in injury to persons and or significant damage to material.

d. Degradation Failure - Failure that is both gradual and partial.

e. Gradual Failure - Failure that could be anticipated by prior examination or monitoring.

f. Partial Failure - Failure resulting from deviation in characteristics beyond specified limits, but not such as to cause complete lack of the required function.

g. Single Point Failure - A failure of a single item which has the effect of failing an entire function or functionality.

h. Sudden Failure - Failure that could not be anticipated by prior examination or monitoring.

# APPENDIX 2. ACRONYMS

| | |
|---|---|
| AAL | Alaska Region |
| AAP | Office of the Program Manager for Advanced Automation |
| AAS | Advance Automation System |
| AASR | AT-Advanced Automation System Representative |
| AC | Alternating Current |
| ACCC | Area Control Computer Complex |
| ACE | Central Region |
| ACF | Area Control Facility |
| ACEPS | ACF Critical/Essential Power System |
| ACN | Engineering Test and Evaluation Service |
| ACT | FAA Technical Center |
| AEA | Eastern Region |
| AF | Airway Facilities |
| AFAPM | AF Associate Program Manager |
| AFE | Facility System Engineering Service |
| AFRAPM | AF Regional Associate Program Manager |
| AFVIT | AF VSCS Implementation Team |
| AFVLT | AF VSCS Logistics Team |
| AFVOST | AF VSCS Operational Test and Evaluation/System Shakedown Testing (OT&E/SST) |
| AFVTT | AF VSCS Training Team |
| A/G | Air-to-Ground |
| AGL | Great Lakes Region |
| AHT | Office of Training and Higher Education |
| AITS | Action Item Tracking System |
| AMA | FAA Academy |
| AMA | Assistant Manager for Automation |
| AMC | Mike Monroney Aeronautical Center |
| AMI | Assistant Manager for Implementation |
| AMIC | Area Manager-in-Charge |
| AML | FAA Logistics Center |
| AMNI | Assistant Manager for NAS Implementation |
| AMSP | Assistant Manager for System Performance |
| ANE | New England Region |
| ANM | Northwest Mountain Region |
| ANS | NAS Transition and Implementation Service |
| ANS-230 | GNAS Facilities Program Branch |
| AOR | Operations Research Service |
| AOS | Operational Support Service |
| AOS-200 | National Engineering Field Support Division |
| AOS-500 | National Automation Engineering Field Support Division |
| APMC | Associate Program Manager for Contracting |

| | |
|---|---|
| APMCOTR | Associate Program Manager for the Contracting Officer's Technical Representative |
| APMED | Associate Program Manager for Engineering Development |
| APMFES | Associate Program Manager for Field Engineering Support |
| APMI | Associate Program Manager for Implementation |
| APMGC | Associate Program Manager for General Counsel |
| APML | Associate Program Manager for Logistics |
| APMP | Associate Program Manager for AT Procedures |
| APMQ | Associate Program Manager for Quality |
| APMR | Associate Program Manager for AT Requirements |
| APMSE | Associate Program Manager for Systems Engineering |
| APMSM | Associate Program Manager for Systems Maintenance |
| APMT&E | Associate Program Manager for Test and Evaluation |
| ARTCC | Air Route Traffic Control Center |
| AS | Area Supervisor |
| ASE | NAS Systems Engineering Service |
| ASE-200 | NAS Communications System Engineering Division |
| ASM | Systems Maintenance Service |
| ASM-340 | Telecommunications Network Management Branch |
| ASO | Southern Region |
| ASTM | American Society for Testing and Materials |
| ASU | Contracts and Quality Assurance |
| ASW | Southwest Region |
| AT | Air Traffic |
| ATAVIT | AT AAS/VSCS Implementation Team |
| ATAVOTT | AT AAS/VSCS Operational Test and Evaluation Team |
| ATC | Air Traffic Control |
| ATCS | Air Traffic Control Specialist |
| ATE | Automatic Test Equipment |
| ATO | Assistant Technical Officer |
| ATP | Air Traffic Rules and Procedures Service |
| ATR | Air Traffic Plans and Requirements Services |
| ATR-320 | AT Advanced Automation Systems Requirements |
| ATRR | Air Traffic Regional Representative |
| AT&T | American Telephone and Telegraph |
| ATVTT | AT VSCS Training Team |
| ATZ | Office of Air Traffic Program Management |
| AVSST | AAS/VSCS Software Supportability Team |
| AWP | Western Pacific Region |
| BBS | VSCS Bulletin Board |
| BIT | Built-in test |
| BITE | Built-in test equipment |

| | |
|---|---|
| BTU | British Thermal Unit |
| BUEC | Backup Emergency Communications |
| BUSLAN | Bus Local Area Network |
| CAGE | Commercial and Government Entity |
| CAI | Contract Acceptance Inspection |
| CAS | Commercially Available Software |
| C/C | Common Console |
| CCB | Configuration Control Board |
| CCD | Configuration Control Decision |
| CC-Mail | Electronic mail software application used to support VSCS |
| CERAP | Combined Center Radar Approach Control |
| CDB | Configuration Data Base |
| CDF | Combined Distribution Frame |
| CDR | Critical Design Review |
| CDRL | Contract Data Requirement List |
| CFCF | Central Flow Control Facility |
| CHI | Computer Human Interface |
| CIP | Capital Investment Plan |
| CM | Configuration Management |
| CMP | Contract Management Plan |
| CO | Contracting Officer |
| CONFIG | Configuration |
| CONUS | Continental United States |
| COTR | Contracting Officer's Technical Representative |
| CPC | Critical Power Centers |
| CSC | Computer Software Component |
| CSCI | Computer Software Configuration Item |
| CTS | Coded Time Source |
| CTSU | Contractor Traffic Simulation Unit |
| CWSU | Center Weather Service Unit |
| DARC | Direct Access Radar Channel |
| DCR | Document Change Request |
| DDF | Development Demonstration Facility |
| DEO | Data Entry Operator |
| DJM | Dual-Jack Module |
| DMC | Discrete Monitor and Control |
| DMVSCS | Deputy Manager for VSCS |
| DOD | Department of Defense |
| DOT | Department of Transportation |
| DPMAAS | Deputy Program Manager for Advanced Automation Services |
| DRR | Deployment Readiness Review |
| DT&E | Development Test and Evaluation |
| DYSIM | Dynamic Simulation |
| E&R | Exchange and Repair |
| EEM | Electronic Equipment Modifications |
| EMC | Electromagnetic Compatibility |

| | |
|---|---|
| EMI | Electromagnetic Interference |
| FAA | Federal Aviation Administration |
| FAT | Factory Acceptance Testing |
| FCA | Functional Configuration Audit |
| F&E | Facilities and Equipment |
| FQR | Functional Qualification Review |
| FRACAS | Failure Reporting Analysis and Corrective Action System (CDRL - VP 28) |
| FRDF | Facility Reference Data File |
| FS | Foot Switch |
| FSD | Federal Systems Division |
| FSS | Flight Service Station |
| FT. | Foot |
| FTS | Federal Telecommunications System |
| FY | Fiscal Year |
| GFE | Government-Furnished Equipment |
| G/G | Ground-to-Ground |
| HCVR | High Capacity Voice Recorder |
| HDR | Hardware Discrepancy Report |
| HR. | Hour |
| HVAC | Heating, Ventilation, and Air Conditioning |
| HWCI | Hardware Configuration Item |
| H/W | Hardware |
| Hz | Hertz |
| IC | Intercom |
| ICD | Interface Control Document |
| ICM | FAA/SETA Internal Coordination Meeting |
| IDF | Intermediate Distribution Frame |
| IEEE | Institute of Electrical and Electronic Engineers |
| ILS | Integrated Logistics Support |
| ILSP | ILS Plan |
| IN. | Inch |
| IOC | Initial Operational Capability |
| IP | Interphone |
| IRD | Interface Requirements Document |
| ISSS | Initial Sector Suite System |
| IT&E | Integration Test and Evaluation |
| JAI | Joint Acceptance Inspection |
| KVA | Kilovoltampere |
| LAN | Local Area Network |
| LBS. | Pounds |
| LCN | Local Communications Network |
| LINCS | Leased Interfacility NAS Communications System |
| LOGIN | Logging into a computer or LAN |
| LRU | Line Replaceable Unit |
| LS | Loudspeaker |
| LSA | Logistics Support Analysis |

| | |
|---|---|
| LSAP | Logistic Support Analysis Plan |
| LSAR | Logistic Support Analysis Record |
| MCC | Maintenance Control Center |
| MDFM | Material Delivery Forecast Module |
| MDS | Master Demarcation System |
| MHE | Material Handling Equipment |
| MIL | Military |
| MIN. | Minute |
| MMP | Maintenance Management Plan |
| MOA | Memorandum of Agreement |
| MOS | Military Operations Specialist |
| MPE | Maintenance Position Equipment |
| MPES | Maintenance Position Equipment Subsystem |
| MPS | Maintenance Processor Subsystem |
| MRD | Maintenance Requirements Document |
| MTP | Master Test Plan (CDRL - VP 73) |
| MVSCS | Division Manager for VSCS |
| NAILS | National Airspace Integrated Logistics Support |
| NAILSMT | VSCS NAILS Management Team |
| NAS | National Airspace System |
| NASM | NAS Manager |
| NASOC | NAS Onsite Coordinator |
| NCP | NAS Change Proposal |
| NIT&E | NAS Integration Test and Evaluation |
| NMCE | Network Management and Control Equipment |
| ORD | Operational Readiness Demonstration |
| OT&E | Operational Test and Evaluation |
| PA | Project Authorization |
| PABX | Private Automatic Branch Exchange |
| PAT&E | Production Acceptance Test and Evaluation |
| PCA | Physical Configuration Audit |
| PCB&T | Personnel, Compensation, Benefits, and Travel |
| PCS | Power Conditioning System |
| PD | Program Directive |
| PDP | Prototype Development Phase |
| PDPU | Prototype Development Phase Upgrade |
| PHS&T | Packaging, Handling, Storage, and Transportation |
| PIP | Project Implementation Plan |
| PMB | Program Manager for Business |
| POC | Point-of-Contact |
| PPI | Planned Product Improvement |
| PSTN | Public Switched Telephone Network |
| PTD | Provisioning Technical Documentation |
| PTR | Program Technical Report |
| PVD | Plan View Display |
| QRO | Quality Reliability Officer |
| RCAG | Remote Center A/G Communications Facility |

| | |
|---|---|
| RCE | Radio Control Equipment |
| REPLAN | Replanning for Implementation of the VSCS |
| RFP | Request-for-Proposal |
| RMA | Reliability, Maintainability and Availability |
| RMMS | Remote Maintenance Monitoring System |
| SAD | Site Adaptation Data |
| SAP | Site Activation Plan (CDRL - VP 13) |
| SAR | System Analysis Recording |
| SAS | Site Activation Survey |
| SAT | Site Acceptance Testing |
| SATC | AT Control Supervisor |
| SDS | Software Development System |
| SETA | System Engineering and Technical Assistance |
| SIP | Site Implementation Plan |
| SIS | Systems Interconnect Subsystem |
| SMMC | System Maintenance Monitor Console |
| SOW | Statement of Work |
| SPS | Systems Performance Specialists |
| SPDIP | Site Preparation Design Information Package (CDRL - VP 14) |
| SQ. | Square |
| SRS | System Requirements Statement |
| SRT | VSCS System Requirements Team |
| SST | System Shakedown Testing |
| STB | Site Technical Bulletins |
| STD | Standard |
| STP | Subsystem Training Plan |
| S/W | Software |
| TBD | To Be Determined |
| TBS | To Be Supplied |
| TCS | Tower Communications System |
| T&E | Test and Evaluation |
| TIM | Technical Interchange Meeting |
| TMDE | Test, Measurement and Diagnostic Equipment |
| TM&O | Telecommunications, Management, and Operations (ASM-300) |
| TMU | Traffic Management Unit |
| TOR | Technical Onsite Representative |
| TPS | Test Program Set |
| TRACON | Terminal Radar Approach Control |
| TSR | Telecommunications Service Request |
| TST | Technical Specialty Teams |
| UPS | Uninterruptible Power Supply |
| USERID | User Identification |
| VAC | Volts Alternating Current |
| VCE | VSCS Console Equipment |
| VCEA | AAS Supplied VCE |
| VCET | VSCS Console Equipment Trainers |
| VCEV | VSCS Supplied VCE |

| | |
|---|---|
| VDF/RI IDF | VSCS Distribution Frame/Radio Interface Intermediate Distribution Frame |
| VDM | VSCS Display Module |
| VDPT | VSCS Development Test and Evaluation/Production Acceptance Test and Evaluation (DT&E/PAT&E) Team |
| VEM | VSCS Electronics Module |
| VIK | VSCS Indirect Access Keypad |
| VIMT | VSCS Implementation Management Team |
| VSCS | Voice Switching and Control System |
| VSF | VSCS Support Facility |
| VTMT | VSCS Test Management Team |
| VVR | Southern California TRACON |
| WECO | Western Electric Company |
| WP | Whitepaper |
| ZAB | Albuquerque ARTCC |
| ZAN | Anchorage ARTCC |
| ZAU | Chicago ARTCC |
| ZBW | Boston ARTCC |
| ZDC | Washington ARTCC |
| ZDV | Denver ARTCC |
| ZFW | Fort Worth ARTCC |
| ZHN | Honolulu CERAP |
| ZHU | Houston ARTCC |
| ZID | Indianapolis ARTCC |
| ZJX | Jacksonville ARTCC |
| ZKC | Kansas City ARTCC |
| ZLA | Los Angeles ARTCC |
| ZLC | Salt Lake City ARTCC |
| ZLI | New York TRACON |
| ZMA | Miami ARTCC |
| ZME | Memphis ARTCC |
| ZMP | Minneapolis ARTCC |
| ZNY | New York City ARTCC |
| ZOA | Oakland ARTCC |
| ZOB | Cleveland ARTCC |
| ZSE | Seattle ARTCC |
| ZTL | Atlanta ARTCC |

# APPENDIX 3. VSCS SCHEDULES

## VSCS PRODUCTION PHASE SCHEDULE

| | |
|---|---|
| Production Contract Award | December 1991 |
| Deliver Current Prototype to ACT | January 1992 |
| Accept Current Prototype at ACT | March 1992 |
| Deliver Prototype Upgrade to ACT | January 1993 |
| Accept Prototype Upgrade at ACT | February 1993 |
| Authorize Limited Production | March 1993 |
| Complete OT&E at ACT | July 1993 |
| Commit To Full Production | February 1994 |
| Deliver VSCS to Seattle (ZSE) ARTCC | January 1994 |
| Deliver VSCS to the AMC | Summer 1994 |
| ORD at Seattle ARTCC | April 1995 |
| Deliver PPI to ACT | May 1997 |
| Accept PPI at ACT | July 1997 |
| Complete OT&E on PPI at ACT | October 1997 |

# FIGURE 1. VSCS INTERDEPENDENCY SCHEDULE

| Facility | | VDF Delivery | 1st/2nd HCVR Delivery | 1st/2nd HCVR Quantity | LINCS ARTCC Airspace Delivery + + | Transition Switch Delivery | Initial VCET Quantity | VSCS & VCET Delivery | VSCS ORD | VCE Delivery | ISSS + Delivery | PPI Delivery |
|---|---|---|---|---|---|---|---|---|---|---|---|---|
| Current Prototype | ACT | N/A | 1-92/10-93 | 1/2 | N/A | JAN-92 | N/A | JAN-92 | N/A | N/A | N/A | N/A |
| Prototype Upgrade | ACT | N/A | N/A | N/A | N/A | N/A | 15 | JAN-93 | N/A | OCT-93 | N/A | SEP-96 |
| SEATTLE | ZSE | N/A | 4-92/10-93 | 6/5 | FEB-93 | SEP-93 | 12 | JAN-94 | APR-95 | + | JAN-95 | NOV-96 |
| SALT LAKE CITY | ZLC | OCT-92 | 11-93/12-93 | 5/4 | FEB-93 | DEC-93 | 10 | APR-94 | APR-95 | + | JUN-95 | DEC-96 |
| FAA Academy | AMC | N/A | 6-92 | 7 | N/A | N/A | 31 | AUG-94 | N/A | + | N/A | DEC-96 |
| DENVER | ZDV | AUG-92 | 1-93/3-94 | 7/5 | FEB-93 | APR-94 | 14 | AUG-94 | MAY-95 | + | AUG-95 | JAN-97 |
| ATLANTA | ZTL | MAR-92 | 11-92/8-94 | 8/7 | FEB-93 | JUN-94 | 16 | OCT-94 | JUN-95 | + | SEP-95 | FEB-97 |
| ANCHORAGE | ZAN | AUG-93 | 9-94 | 6/0 | - - | AUG-94 | 12 | FEB-95 | OCT-95 | - - | - - | MAR-97 |
| CHICAGO | ZAU | APR-92 | 4-93/9-94 | 7/5 | MAY-93 | SEP-94 | 16 | MAR-95 | NOV-95 | + | OCT-95 | APR-97 |
| FORT WORTH | ZFW | N/A | 3-94/10-94 | 7/7 | MAY-93 | OCT-94 | 16 | APR-95 | DEC-95 | + | NOV-95 | MAY-97 |
| WASHINGTON | ZDC | SEP-92 | 11-93/11 | 7/6 | JUN-93 | NOV-94 | 16 | MAY-95 | JAN-96 | + | DEC-95 | JUN-97 |
| HOUSTON | ZHU | JUL-92 | 7-93/12-94 | 7/6 | APR-93 | DEC-94 | 16 | JUN-95 | FEB-96 | + | JAN-96 | JUL-97 |
| BOSTON | ZBW | OCT-92 | 5-93/1-95 | 7/5 | MAY-93 | JAN-95 | 12 | JUL-95 | MAR-96 | + | JAN-97 | AUG-97 |
| CLEVELAND | ZOB | JUL-92 | 10-93/2-95 | 7/5 | MAR-93 | FEB-95 | 16 | AUG-95 | APR-96 | + | FEB-96 | SEP-97 |
| NEW YORK ARTCC | ZNY | AUG-93 | 6-94/3-95 | 6/6 | MAR-93 | MAR-95 | 12 | SEP-95 | MAY-96 | + | MAR-96 | OCT-97 |
| KANSAS CITY | ZKC | DEC-92 | 1-94/4-95 | 6/6 | APR-93 | APR-95 | 14 | OCT-95 | JUN-96 | + | APR-96 | NOV-97 |
| MEMPHIS | ZME | APR-93 | 1-94/5-95 | 6/6 | JUN-93 | MAY-95 | 14 | NOV-95 | JUL-96 | + | MAY-96 | DEC-97 |
| ALBUQUERQUE | ZAB | AUG-92 | 2-93/6-95 | 7/6 | JUL-93 | JUN-95 | 14 | DEC-95 | AUG-96 | + | JUN-96 | JAN-98 |
| OAKLAND | ZOA | FEB-93 | 3-94/7-95 | 6/5 | FEB-93 | JUL-95 | 12 | JAN-96 | SEP-96 | + | JUL-96 | FEB-98 |
| MINNEAPOLIS | ZMP | JAN-93 | 2-94/8-95 | 7/6 | APR-93 | AUG-95 | 12 | FEB-96 | OCT-96 | + | AUG-96 | MAR-98 |
| MIAMI | ZMA | MAY-93 | 6-94/9-95 | 5/7 | MAY-93 | SEP-95 | 12 | MAR-96 | NOV-96 | + | SEP-96 | APR-98 |
| LOS ANGELES | ZLA | APR-93 | 4-94/10-95 | 6/5 | FEB-93 | OCT-95 | 12 | APR-96 | DEC-96 | + | OCT-96 | MAY-98 |
| INDIANAPOLIS | ZID | MAY-93 | 6-94/11-95 | 7/6 | JUN-93 | NOV-95 | 16 | MAY-96 | JAN-97 | + | NOV-96 | JUN-98 |
| JACKSONVILLE | ZJX | JUN-93 | 4-94/12-95 | 6/5 | APR-93 | DEC-95 | 12 | JUN-96 | FEB-97 | + | DEC-96 | JUL-98 |
| SO. CAL. TRACON | VVR | AUG-93 | 12-92/1-96 | 6/5 | MAY-93 | JAN-96 | 12 | JUL-96 | MAR-97 | + | - - | AUG-98 |
| NEW YORK TRACON | N90/ZLI | AUG-93 | 7-94/2-96 | 4/4 | - - | FEB-96 | 12 | AUG-96 | APR-97 | - - | - - | SEP-98 |
| HONOLULU | ZHN | ? | 8-94/NA | 5/0 | - - | MAR-96 | ? | SEP-96 | MAY-97 | - - | - - | OCT-98 |

+ Dates are dependent upon the ISSS timetable and are yet to be determined.
+ + LINCS dates reflect the worst case equipment delivery to the ARTCC airspaces. Circuit cutover will occur up to six months after delivery.

# FIGURE 2. VSCS DELIVERY SCHEDULE

| Facility | | Site Activation Survey | Site Readiness Survey | Transition Switch Delivery | VSCS & VCET Delivery | VSCS SAT | VSCS CAI | VSCS IOC | VSCS ORD | PPI Site Act. Survey | PPI Site Rd. Survey | PPI Delivery |
|---|---|---|---|---|---|---|---|---|---|---|---|---|
| Current Prototype | ACT | FEB-91 | SEP-91 | JAN-92 | JAN-92 | N/A | N/A | N/A | N/A | N/A | N/A | N/A |
| Prototype Upgrade | ACT | JAN-92 | MAR-92 | N/A | JAN-93 | N/A | N/A | N/A | N/A | JAN-96 | JUL-96 | SEP-96 |
| SEATTLE | ZSE | JUL-92 | JUL-93 | SEP-93 | JAN-94 | FEB-95 | MAR-95 | MAR-95 | APR-95 | MAR-96 | SEP-96 | NOV-96 |
| SALT LAKE CITY | ZLC | JAN-93 | OCT-93 | DEC-93 | APR-94 | FEB-95 | MAR-95 | MAR-95 | APR-95 | APR-96 | OCT-96 | DEC-96 |
| FAA Academy | AMC | MAY-92 | NOV-93 | N/A | AUG-94 | AUG-94 | JUN-95 | N/A | N/A | APR-96 | OCT-96 | DEC-96 |
| DENVER | ZDV | JUN-93 | FEB-94 | APR-94 | AUG-94 | FEB-95 | MAR-95 | MAY-95 | MAY-95 | MAY-96 | NOV-96 | JAN-97 |
| ATLANTA | ZTL | AUG-93 | APR-94 | JUN-94 | OCT-94 | FEB-95 | MAR-95 | MAY-95 | JUN-95 | JUN-96 | DEC-96 | FEB-97 |
| ANCHORAGE | ZAN | OCT-93 | JUN-94 | AUG-94 | FEB-95 | MAY-95 | JUN-95 | SEP-95 | OCT-95 | JUL-96 | JAN-97 | MAR-97 |
| CHICAGO | ZAU | JAN-94 | JUL-94 | SEP-94 | MAR-95 | JUN-95 | JUL-95 | SEP-95 | NOV-95 | AUG-96 | FEB-97 | APR-97 |
| FORT WORTH | ZFW | FEB-94 | AUG-94 | OCT-94 | APR-95 | JUN-95 | AUG-95 | NOV-95 | DEC-95 | SEP-96 | MAR-97 | MAY-97 |
| WASHINGTON | ZDC | MAR-94 | SEP-94 | NOV-94 | MAY-95 | AUG-95 | SEP-95 | NOV-95 | JAN-96 | OCT-96 | APR-97 | JUN-97 |
| HOUSTON | ZHU | APR-94 | OCT-94 | DEC-94 | JUN-95 | SEP-95 | OCT-95 | DEC-95 | FEB-96 | NOV-96 | MAY-97 | JUL-97 |
| BOSTON | ZBW | MAY-94 | NOV-94 | JAN-95 | JUL-95 | OCT-95 | NOV-95 | JAN-96 | MAR-96 | DEC-96 | JUN-97 | AUG-97 |
| CLEVELAND | ZOB | MAY-94 | DEC-94 | FEB-95 | AUG-95 | NOV-95 | DEC-95 | FEB-96 | APR-96 | JAN-97 | JUL-97 | SEP-97 |
| NEW YORK ARTCC | ZNY | JUL-94 | JAN-95 | MAR-95 | SEP-95 | DEC-95 | JAN-96 | MAR-96 | MAY-96 | FEB-97 | AUG-97 | OCT-97 |
| KANSAS CITY | ZKC | AUG-94 | FEB-95 | APR-95 | OCT-95 | JAN-96 | FEB-96 | APR-96 | JUN-96 | MAR-97 | SEP-97 | NOV-97 |
| MEMPHIS | ZME | SEP-94 | MAR-95 | MAY-95 | NOV-95 | FEB-96 | MAR-96 | MAY-96 | JUL-96 | APR-97 | OCT-97 | DEC-97 |
| ALBUQUERQUE | ZAB | OCT-94 | APR-95 | JUN-95 | DEC-95 | MAR-96 | APR-96 | JUN-96 | AUG-96 | MAY-97 | NOV-97 | JAN-98 |
| OAKLAND | ZOA | NOV-94 | MAY-95 | JUL-95 | JAN-96 | APR-96 | MAY-96 | JUL-96 | SEP-96 | JUN-97 | DEC-97 | FEB-98 |
| MINNEAPOLIS | ZMP | NOV-94 | JUN-95 | AUG-95 | FEB-96 | MAY-96 | JUN-96 | AUG-96 | OCT-96 | JUL-97 | JAN-98 | MAR-98 |
| MIAMI | ZMA | JAN-95 | JUL-95 | SEP-95 | MAR-96 | MAY-96 | JUL-96 | SEP-96 | NOV-96 | AUG-97 | FEB-98 | APR-98 |
| LOS ANGELES | ZLA | JAN-95 | AUG-95 | OCT-95 | APR-96 | JUN-96 | AUG-96 | OCT-96 | DEC-96 | SEP-97 | MAR-98 | MAY-98 |
| INDIANAPOLIS | ZID | FEB-95 | SEP-95 | NOV-95 | MAY-96 | JUL-96 | SEP-96 | NOV-96 | JAN-97 | OCT-97 | APR-98 | JUN-98 |
| JACKSONVILLE | ZJX | APR-95 | OCT-95 | DEC-95 | JUN-96 | AUG-96 | OCT-96 | DEC-96 | FEB-97 | NOV-97 | MAY-98 | JUL-98 |
| SC TRACON | VVR | MAY-95 | NOV-95 | JAN-96 | JUL-96 | OCT-96 | DEC-96 | JAN-97 | MAR-97 | DEC-97 | JUN-98 | AUG-98 |
| NEW YORK TRACON | N90 | JUN-95 | DEC-95 | FEB-96 | AUG-96 | OCT-96 | JAN-97 | FEB-97 | APR-97 | JAN-98 | JUL-98 | SEP-98 |
| HONOLULU | ZHN | JUL-95 | JAN-96 | MAR-96 | SEP-96 | NOV-96 | JAN-97 | MAR-97 | MAY-97 | FEB-98 | AUG-98 | OCT-98 |

All dates shown are C.2/R 9/8/93 unless otherwise indicated.

# VSCS DRR MILESTONES

| | |
|---|---|
| VSCS PDP Delivery for T&E at ACT | March 1992 |
| VCET Delivery for T&E at ACT | September 1992 |
| VSCS PDPU Delivery for T&E at ACT | November 1992 |
| OT&E and Shakedown Testing of PDPU (Projected Completion) | July 1993 |
| VSCS Delivery to First Operational Site (ZSE) | January 1994 |
| OT&E Shakedown Testing on PDPU (ORD Build) (Successful Completion) | January 1995 |
| Develop OT&E Quick-Look Report | January 1995 |
| Teleconference with AMC, ACT, Regions, and Sites | February 1995 |
| ZSE IOC | February 1995 |
| DRR TELCON Date | February 1995 |
| AAF-1 Pre-brief Date | February 1995 |
| EXCOM Meeting | February 1995 |
| ZSE Operational Readiness Date | April 1995 |
| VSCS DRR Deployment Decision | May 1995 |

# APPENDIX 4. VSCS PROJECT CONTACTS

## FAA Headquarters

Federal Aviation Administration
800 Independence Avenue, S.W.
Washington, D.C. 20591

| Name | Organization | Title | Phone Number |
|---|---|---|---|
| John Turner | AND-1 | Associate Administrator | 276-3555 |
| Peter Challan | AAP-2V | VSCS Program Manager | 376-6506 |
| Glenn Halbert | AAP-10 | PMB | (202) 376-6509 |
| Lee Tucker | AAP-400 | VSCS Division Manager | 376-6528 |
| Dick Cassidy | AAP-401 | Deputy Division Manager | 376-6584 |
| James Monnie | AAP-410 | APMED | (202) 376-6531 |
| Joseph Morelli | AAP-420 | APMI | (202) 376-6534 |
| William Boyer | AAP-420 | APMI | (202) 376-6599 |
| Del Breland | AAP-420 | APMI | (202) 376-6597 |
| Alan Sussman | AAP-420 | APMI | (202) 376-6596 |
| Tom Buschbaum | AAP-420 | APMI | (202) 376-6589 |
| Faye Jordan | AAP-430 | APMCOTR | (202) 376-6286 |
| Sadie Walthers | AGC-520 | APMGC | (202) 267-3480 |
| Don Swinney | ANS-220 | ARTCC Program Manager | 267-8571 |
| H.T. Parker | ANS-430 | APML | (202) 267-5955 |
| Pete Holleran | ASE-200 | APMSE | (202) 646-2091 |
| Helen Pernell | ASU-350B | APMC | (202) 267-9022 |
| Gary Evans | ASU-420 | APMQ | (407) 768-4947 |
| Dawna Smith | ATP-130 | APMP | (202) 267-8630 |
| Gary Mileski | ATR-320 | APMR | (202) 267-7581 |
| Jim Scott | ASM-240 | APMSM | (202) 267-8308 |

## FAA Technical Center (ACT)

Federal Aviation Administration
FAA Technical Center
Atlantic City International Airport
Atlantic City, NJ 08405

| | | | |
|---|---|---|---|
| Russ Spadea | ACN-200 | APMT&E | (609) 485-6203 |
| Donnie Fisher | ACN-200A | DT&E | (609) 485-5732 |
| Mike Gallagher | ACN-200B | OT&E/AF | (609) 485-4806 |
| Steve Curran | ACN-200C | NIT&E | (609) 485-6779 |
| Angela Burrows | ACN-200D | OT&E/AT | (609) 485-6779 |
| Norm Kull | AOS-500 | APMFES | (609) 485-5252 |
| Frank Happel | AOS-550 | SST/FES | (609) 485-5249 |
| Nancy Olufs | AOS-550 | SST/FES | (609) 485-6698 |
| Larry Cagle | AOS-550 | SST/FES | (609) 485-6252 |

| Name | Organization | Title | Phone Number |
|---|---|---|---|

Mike Monroney Aeronautical Center (AMC)

Federal Aviation Administration
Mike Monroney Aeronautical Center
P.O. Box 25082
Oklahoma City, OK 73125

| | | | |
|---|---|---|---|
| Don Claypool | AML-20 | AFAPM | (405) 954-5308 |
| Clayton Rains, Jr. | AML-460 | AFAPM | (405) 954-5234 |
| James Smith | AMA-433 | APM | (405) 954-4779 |
| Wayne Guthrie | AMA-570 | ATRR | (405) 954-4408 |

Alaskan Region (AAL)

Federal Aviation Administration
Alaskan Region
222 W 7th Ave., Box 14
Anchorage, Alaska 99513

| | | | |
|---|---|---|---|
| Bruce Benson | NAS Coordinator | | (907) 269-1131 |
| Mike Hessler | AAL-512 | ATRR | (907) 271-3067 |
| Jerry Jensen | AAL-421A | AFRAPM | (907) 271-3840 |

Central Region (ACE)

Federal Aviation Administration
Central Region
601 East 12th Street
Kansas City, MO 64106

| | | | |
|---|---|---|---|
| Alex Garcia | ZKCAF-101 | AFRAPM | (913) 791-8614 |
| Tom Klocek | ACE-512 | ATRR | (913) 791-3400 |

Eastern Region (AEA)

Federal Aviation Administration
Fitzgerald Federal Building
JFK International Airport
Jamaica, NY 11430

| | | | |
|---|---|---|---|
| Jim McGovern | AEA-421.2 | AFRAPM | (718) 553-1174 |
| Robert Ott | AEA-512 | ATRR | (516) 420-4165 |

| Name | Organization | Title | Phone Number |
|---|---|---|---|

## Great Lakes Region (AGL)

Federal Aviation Administration
Great Lakes Region
2300 E. Devon Avenue
Des Plaines, IL 60018

| | | | |
|---|---|---|---|
| Jane Montgomery | AGL-421 | AFRAPM | (708) 294-7593 |
| Jim Lichlyter | AGL-512 | ATRR | (708) 294-7554 |

## New England Region (ANE)

Federal Aviation Administration
New England Region
12 New England Exec. Park
Burlington, MA 01803

| | | | |
|---|---|---|---|
| Bruce Ng | ANE-422 | AFRAPM | (617) 238-7434 |
| Tom Nesbitt | ANE-512 | ATRR | (617) 238-7512 |

## Northwest Mountain Region (ANM)

Federal Aviation Administration
Northwest Mountain Region
1601 Lind Avenue Southwest
Renton, WA 98055-4056

| | | | |
|---|---|---|---|
| John Fredenberg | ANM-414 | AFRAPM | (207) 227-2414 |
| Ron Cody | ANM-512 | ATRR | (207) 227-2510 |

## Southern Region (ASO)

Federal Aviation Administration
Southern Region
3400 Norman Berry Drive
East Point, GA 30344

| | | | |
|---|---|---|---|
| William Morely | ASO-422 | AFRAPM | (404) 763-7371 |
| Paul Smith | ASO-420A | AF | (404) 763-7677 |
| Mike Commander | ASO-513 | ATRR | (404) 763-7561 |

| Name | Organization | Title | Phone Number |
|---|---|---|---|
| **Southwest Region (ASW)** | | | |
| Federal Aviation Administration<br>Southwest Region<br>4400 Blue Mound Road<br>Fort Worth, TX 76193-0512 | | | |
| Russ Lenz | ASW-422.2 | AFRAPM | (817) 740-3279 |
| Bill Dunn | ASW-422.2 | AFRAPM (alt.) | (817) 740-3492 |
| Jim Nausley | ASW-512 | ATRR | (817) 740-5512 |
| **Western Pacific Region (AWP)** | | | |
| Federal Aviation Administration<br>Western Pacific Region<br>P.O. Box 90027<br>Los Angeles, CA 90009 | | | |
| Daryl Kitchen | AWP-422.41 | AFRAPM | (310) 297-1494 |
| Jack Van Zandt | AWP-512 | ATRR | (310) 297-1616 |
| **Development Demonstration Facility (DDF)** | | | |
| Federal Aviation Administration<br>Development Demonstration Facility<br>940 Clopper Road<br>Gaithersburg, MD 20878 | | | |
| Marshall Van Helsland | | Director | (301) 258-6100 |

# APPENDIX 5. VSCS RESPONSIBILITY MATRIX

1. PURPOSE. This matrix defines responsibilities at the operational facilities during:

a. Site preparation phase.

b. Installation and checkout phase.

c. Integration and acceptance test phase.

d. Operational site testing phase.

e. Operational shakedown phase.

f. Commissioned operational phase, and identify:

(1) VSCS contractor site CDRL deliverables.

(2) CO (ASU-300) responsibilities.

2. ASSUMPTIONS.

a. Regional F&E engineers have the expertise required for integration of VSCS into existing systems.

b. Complexity of the project requires regional AF and AT personnel to oversee centers in their region to diminish the learning curve at each site.

c. Site AF and AT have joint sign-off responsibility on JAI.

d. Manpower at sites is inadequate for primary responsibility of most installation tasks.

e. Site AF activities are the responsibility of the AF sector or the NAS Coordination Office/VSCS Onsite Coordinator, depending on the task.

f. Responsibility for regional AF activities is as designated by the AF Division manager.

g. Onsite system shakedown is conducted as an ACT follow-on activity. Onsite shakedown consists of activities that cannot be physically completed at ACT. Support for these activities is provided by ACT, if requested.

h. Responsibility for site AT activities is the ARTCC or the NAS Coordination Office/VSCS Implementation Specialist, depending on the task.

i. Responsibility for regional AT activities is as designated by the AT Division manager.

j. VSCS uses a team concept where personnel from other regions/centers with VSCS experience are detailed to assist regions/centers without VSCS experience.

3. TASK DEFINITIONS.

a. VSCS contractor tasks. These activities are conducted by the VSCS contractor and/or their subcontractors with oversight by the designated Government organizations.

b. Government tasks. These activities are conducted by the designated Government organizations and their supporting contractors.

4. Responsibility definitions.

a. D - Dual responsibility. Two or more organizations have joint responsibility for successful completion of the activity.

b. I - Information. The indicated organizations may have an interest in the activity. Comments or action relative to the activity are not required.

c. P - Primary responsibility. The organization indicated has sole responsibility for ensuring that the activity is successfully completed.

d. R - Review. The indicated organization indicated has sole responsibility for ensuring that the activity is successfully completed.

e. S - Support. Organizations indicated provide support to the primary organization in completing the indicated activity. A support organization may monitor indicated activities versus active participation. Support activities are either onsite or off-site.

f. @ - Selected Support. Organization may opt to provide support only to select sites.

g. @@ - Delegate Support. Organization may opt to delegate their responsibilities to site AT or site AF, depending on the activity.

# FIGURE 3. SITE PREPARATION PHASE

| SITE PREPARATION PHASE VSCS CONTRACTOR TASK DESCRIPTION | SITE AF | SITE AT | REGION AF | REGION AT | AAP 410 | AAP 420 | AOS 500 | ACN 200 | ATR 320 | ANS 200 | TOR | QRO | AAP 430 |
|---|---|---|---|---|---|---|---|---|---|---|---|---|---|
| Provide Supplemental Support | D | S | D | S | | | | | | | S | | |
| Conduct SAS | S | S | S | S | S@ | P | S | S | S | S@ | S | | S@ |
| Gather Site-Specific Configuration Map Data | S | P | S | S | | S | | | S | | S | | |
| Prepare Site-Specific Schedule | D | D | S | S | | S | | | | S@ | S | | |
| Perform M-1 Console Modifications | S | S | P | S | | S | | | | S@ | | S | |
| Conduct Site Readiness Survey | S | S | S | S | S@ | P | S | S | S | S@ | S | | S@ |
| Install & Connect Transition Switch to VDF/RI IDF & MDS | S | S | P | S | S@ | S@ | S@ | | | | | S | |
| Install & Checkout VCET | D | D | S | S | S@ | S@ | S@ | S | | | S | S | |
| Sign-off for Inspection of Delivered VCET Items | S | S | S | S | | | | | | | S | P | S@@ |
| Perform CAI of VCET | S | S | S | S | S | S | | S | | | P | S | S@@ |

| SITE PREPARATION PHASE GOVERNMENT TASK DESCRIPTION | SITE AF | SITE AT | REGION AF | REGION AT | AAP 410 | AAP 420 | AOS 500 | ACN 200 | ATR 320 | ANS 200 | TOR | QRO | AAP 430 |
|---|---|---|---|---|---|---|---|---|---|---|---|---|---|
| Perform Installation/ Integration of VDF/RI IDF to Existing Comm System | S | S | P | S | S@ | S | S | | | | S | | |
| Develop VSCS SIP | D | D | S | S | | S | S | | S | S@ | | | |
| Develop Site Procedures for VSCS Maintenance | P | | | | | S | S | | | | | | |
| Develop Site Procedures for SMMC | P | | | | | S | S | | | | | | |
| Develop Transition Period Operational Procedures | S | P | | S | | | S | | S | | | | |
| Develop Site-Specific Shakedown Plan/Procedures[5] | D | D | S | S | | S | S | | S | | | | |
| Generate TSRs for Telco Equipment Relocation | D | D | S | S | | | | | | | S | | |
| Release/Coordination of Telco Circuits | D | D | S | S | | | | | | | S | | |
| Release/Certification of Operational Positions | D | D | S | S | | | | | | | S | | |
| Coordinate Power Upgrade Design | S | S | S | S | | P | | | | S@ | | | |
| Coordinate Power Upgrade Implementation | S | S | P | S | | S | | | | S@ | | | |
| Generate the FRDF | S | | P | | | | | | | | S | | |
| Review CDRLs (Site Activation, Site Readiness, SPDIP, Map Generation Report, Certification Parameters, Transition & Maintenance CDRLs) | S | S | S | S | S@ | P | S | | S | | S | S | |

[5] AOS-500 has the responsibility for developing generic ACT SST Plan/Procedures that will be tailored to specific site configurations.

# FIGURE 4. INSTALLATION and CHECKOUT PHASE

| INSTALLATION & CHECKOUT PHASE CONTRACTOR TASK DESCRIPTION | SITE AF | SITE AT | REGION AF | REGION AT | AAP 410 | AAP 420 | AOS 500 | ACN 200 | ATR 320 | ANS 200 | TOR | QRO | AAP 430 |
|---|---|---|---|---|---|---|---|---|---|---|---|---|---|
| Installation of Operational H/W | D | S | D | S | | S@ | S@ | | | | S | S | |
| Install Operational Site Data Base S/W | D | | D | | S@ | S@ | S@ | S | | | S | S | |
| Submit, for Review, Operational H/W Test Results | D | | D | | S@ | S@ | S@ | S | | | S | S | |
| Connect Transition Switch to VSCS | D | S | D | S | | S@ | | | | | S | S | |
| Perform Line-by-Line Testing of Transition Switch | D | D | D | D | S@ | S@ | S@ | S | | | S | S | |

| INSTALLATION & CHECKOUT PHASE GOVERNMENT TASK DESCRIPTION | SITE AF | SITE AT | REGION AF | REGION AT | AAP 410 | AAP 420 | AOS 500 | ACN 200 | ATR 320 | ANS 200 | TOR | QRO | AAP 430 |
|---|---|---|---|---|---|---|---|---|---|---|---|---|---|
| Arrange Delivery Van Access | P | S | S | | | | | | | | S | | |
| Provide Staging & Parking Area | P | S | S | | | | | | | | S | | |
| Develop Inventory of Equipment After Delivery | S | | S | | | | | | | | P | S | S |
| Provide Visitor/Clearance Documentation for Installation Personnel | D | D | S[6] | | | | | | | | S | | |
| Release/Certification of Operational Positions | D | D | S | S | | | | | | | S | | |
| Release/Coordination of Telco Circuits | D | D | S | S | | | | | | | S | | |
| Balance HVAC, If Required | P | | S | | | | | | | S@ | | | |
| Support Power-Up | D | S | D | S | | | | | | S@ | | | |
| Attend Test Dry-Runs | D | D | S | S | S@ | S@ | S@ | S | | | S | S | |
| Review Site Drawings & Computer Operational Manuals | S | S | S | S | S | P | S | S | | | S | S | |
| Review Test Plans & Test Procedures | S | S | S | S | S | S | S | P | S | | S | S | |
| Coordination with External Facilities (Terminal, FSS, ARTCC, Mil.) to Support Testing | D | D | S | S | | | | | | | S | | |
| Update FRDF | S | | P | | | | | | | | S | | |
| Review & Update Service Contingency Plan | D | D | S | S | | | | | | | S | | |

[6] Supported by regional Civil Aviation Security Division.

# FIGURE 5. INTEGRATION AND ACCEPTANCE TEST

| INTEGRATION & ACCEPTANCE TEST PHASE CONTRACTOR TASK DESCRIPTION | SITE AF | SITE AT | REGION AF | REGION AT | AAP 410 | AAP 420 | AOS 500 | ACN 200 | ATR 320 | TOR | QRO | AAP 430 |
|---|---|---|---|---|---|---|---|---|---|---|---|---|
| Perform System S/W Test | S | S | S | S | Paa | Sa | Sa | S | | S | S | |
| Submit, for Review, the System S/W Test Results | S | S | S | S | Paa | Sa | S | S | Sa | | S | |
| Perform VCE Integration Tests | S | S | S | S | Paa | Sa | Sa | S | | S | S | |
| Submit, for Review, the VCE Integration Test Results | S | S | S | S | Paa | Sa | S | S | Sa | | Sa | |
| Sign-off for Inspection of Delivered Contract Items | S | S | S | S | Paa | | | | | | D | D |
| Integrate Site Configuration Data | S | S | S | S | Paa | Sa | | S | | S | | |
| Perform S/W Tests With Site Configuration Data | S | S | S | S | Paa | Sa | Sa | S | | S | | |
| Submit, for Review, the Site Configuration Data S/W Test Results | S | S | S | S | Paa | Sa | | S | Sa | | S | |
| Perform Site-Specific Failure Recovery Test | S | S | S | S | Paa | Sa | | S | | S | | |
| Submit, for Review, the Site-Specific Failure Recovery Test Results | S | S | S | S | Paa | Sa | Sa | S | Sa | | S | |
| Perform CAI | S | S | S | S | S | S | | S | | P | D | D |
| Submit, for Review, the Final Test Report | S | S | S | S | Paa | Sa | Sa | S | Sa | S | S | |

| INTEGRATION & ACCEPTANCE TEST PHASE GOVERNMENT TASK DESCRIPTION | SITE AF | SITE AT | REGION AF | REGION AT | AAP 410 | AAP 420 | AOS 500 | ACN 200 | ATR 320 | TOR | QRO | AAP 430 |
|---|---|---|---|---|---|---|---|---|---|---|---|---|
| Monitor Contractor Site Acceptance Tests | D | D | S | S | S | S | S | S | S | S | S | S |
| Review Test Reports | S | S | S | S | S | S | S | P | S | S | S | S |

# FIGURE 6. OPERATIONAL SITE TESTING PHASE

| OPERATIONAL SITE TESTING PHASE **CONTRACTOR** TASK DESCRIPTION | SITE AF | SITE AT | REGION AF | REGION AT | AAP 410 | AAP 420 | AOS 500 | ACN 200 | ATR 320 | TOR | QRO | AAP 430 |
|---|---|---|---|---|---|---|---|---|---|---|---|---|
| Provide VSCS Contractor Maintenance Support | P | S | | | | | S | | | S | S | |
| Provide VSCS Contractor Engineering Support | P | S | | S | | | S | | | S | S | |
| Collect RMS Data for FRACAS Summary CDRL | S | S | | | P | S | S | | | S | | |

| OPERATIONAL SITE TESTING PHASE **GOVERNMENT** TASK DESCRIPTION | SITE AF | SITE AT | REGION AF | REGION AT | AAP 410 | AAP 420 | AOS 500 | ACN 200 | ATR 320 | TOR | QRO | AAP 430 |
|---|---|---|---|---|---|---|---|---|---|---|---|---|
| Commerce Logistics Management | P | S | | | | | S | | | S | | |
| Generate Reconfiguration Procedures | S | P | S | S | | | S | | S | S | | |
| Validate Failure Recovery Procedures | D | D | S | S | | | S | | S | S | | |
| Generate All Operation Procedures | S | P | | S | | | S | | S | S | | |
| Verify System Maintenance & Certification Procedures | P | S | | S | | | S | | | S | | |
| Validate Procedures to Maintain AT Data Base | D | D | S | S | | | S | | S | S | | |
| Perform VSCS AF Certification | P | S | S | | | | | | S | S | | |
| Conduct System Shakedown[7] | D | D | S | S | | | S | Sa | S | S | S | |
| Complete AF Training | P | | S | | | | S | | | S | | |
| Complete AT Training | | P | | S | | | | | S | S | | |
| Conduct Partial JAI | D | D | S | S | | | S | | | S | | |
| Declare IOC | D | D | | | | | S | | | S | | |
| Update FRDF | S | | P | | | | | | | S | | |
| Prepare & Review Shakedown Test Reports | S | S | S | S | S | S | Pa | Sa | S | S | S | |

[7] AOS-500 has primary responsibility with support from site AF and AT for follow-on system shakedown activities.

# FIGURE 7. OPERATIONAL SHAKEDOWN PHASE

| OPERATIONAL SHAKEDOWN PHASE CONTRACTOR TASK DESCRIPTION | SITE AF | SITE AT | REGION AF | REGION AT | AAP 410 | AAP 420 | AOS 500 | ACN 200 | ATR 320 | ANS 200 | TOR | QRO | AAP 430 |
|---|---|---|---|---|---|---|---|---|---|---|---|---|---|
| Provide VSCS Contractor Maintenance Support | P | S | | S | | | S | | | | S | S | |
| Provide VSCS Contractor Engineering Support | P | S | | S | | | S | | | | S | S | |
| Collect RMS Data for FRACAS Summary CDRL | P | S | | | S | S | S | | | | S | | |
| Schedule Shakedown Sessions | S | P | | | | | | | | | S | | |
| Switchforward to VSCS & Switchback to WECO 300/4-Channel Radio Equipment | D | D | | | | | | | | | S | | |

| OPERATIONAL SHAKEDOWN PHASE GOVERNMENT TASK DESCRIPTION | SITE AF | SITE AT | REGION AF | REGION AT | AAP 410 | AAP 420 | AOS 500 | ACN 200 | ATR 320 | ANS 200 | TOR | QRO | AAP 430 |
|---|---|---|---|---|---|---|---|---|---|---|---|---|---|
| Transfer VSCS to Critical Power Bus | P | S | S | | | | S | | | S@ | S | | |
| Perform Certification of ATC Personnel | | P | | | | | | | | | S | | |
| Finalize Operational Procedures | S | P | | S | | | | | | | S | | |
| Schedule Shakedown Sessions | S | P | | | | | | | | | S | | |
| Switchforward to VSCS & Switchback to Existing Equipment | D | D | | | | | | | | | S | | |
| Conduct Partial JAI | D | D | S | S | | | | | | | S | | |
| Declare Operational Readiness Date | D | D | S | S | | | | | | | S | S | |

# FIGURE 8. COMMISSIONED OPERATION PHASE

| COMMISSIONED OPERATION PHASE CONTRACTOR TASK DESCRIPTION | SITE AF | SITE AT | REGION AF | REGION AT | AAP 410 | AAP 420 | AOS 500 | ACN 200 | ATR 320 | ANS 200 | TOR | QRO | AAP 430 |
|---|---|---|---|---|---|---|---|---|---|---|---|---|---|
| Provide VSCS Site Contractor Maintenance Support | P | S | | S | | | S | | | | S | S | |
| Provide VSCS Site Contractor Engineering Support | P | S | | S | | | S | | | | S | S | |
| Collect RMA Data for FRACAS Summary CDRL | P | S | | | S | S | S | | | | S | | |
| Remove VSCS Transition Switch | D | S | D | S | | S | S | | | | S | | |
| Integrate & Test VCE in Common Console | D | D | S | S | | S | S | | | | S | | |
| Remove & Refurbish Existing Console VCE | D | S | D | S | | S | S | | | | S | | |

| COMMISSIONED OPERATION PHASE GOVERNMENT TASK DESCRIPTION | SITE AF | SITE AT | REGION AF | REGION AT | AAP 410 | AAP 420 | AOS 500 | ACN 200 | ATR 320 | ANS 200 | TOR | QRO | AAP 430 |
|---|---|---|---|---|---|---|---|---|---|---|---|---|---|
| Remove WECO 300[8] | D | S | D | S | | S | | | | | S | | |
| Issue Procedures for Disposition of Equipment Replaced by the VSCS | S | | S | | | P | S | | | | S | | |
| Update FRDF | S | | P | | | | | | | | S | | |
| Decommission & Remove 4-Channel Equipment | D | S | D | S | | S | | | | | S | | |

[8] Responsibility for physical removal of WECO 300 equipment rests with the owner when the owner is not the Federal Government.

# FIGURE 9. ALL PHASES - CDRL REVIEWS

| ALL PHASES CONTRACTOR CDRL DELIVERABLES/REVIEWS | SITE AF | SITE AT | REGION AF | REGION AT | AAP 410 | AAP 420 | AOS 500 | ACN 200 | ATR 320 | ANS 200 | TOR | QRO | AAP 430 |
|---|---|---|---|---|---|---|---|---|---|---|---|---|---|
| VP13 Site Activation Plan | R | R | R | R | S | P | R | R | I | S@ | S | R | S |
| VP14 Site Preparation Design Information Package | R | R | R | R | S | P | R | R | | S@ | S | R | S |
| VP15 Site Readiness Review Report | R | R | R | R | S | P | R | R | I | S@ | S | R | S |
| VP16 Transition Plan | R | R | R | R | S | P | R | R | I | S@ | S | R | S |
| VP26 Map Generation Report | R | R | I | R | S | P | R | R | I | | S | R | |
| VP27 Version Description Doc. | R | I | R | I | S | P | R | R | | | S | R | |
| VP32 S/W Product Specification | R | I | R | I | S | P | R | R | | | S | R | |
| VP41 Interface Control Doc. | R | I | R | I | S | P | R | R | | | S | R | |
| VP54 Maintenance Plan | R | R | I | R | S | P | R | R | | | S | R | |
| VP67 Computer Sys. Diag. Manual | R | I | I | I | P | S | R | R | | | S | R | |
| VP68 Computer Sys. Ops. Manual | R | I | I | | P | S | R | R | | | S | R | |
| VP71 Commercial Manuals H/W | R | R | R | | S | P | R | R | | | S | R | |
| VP72 H/W Tech. Manuals & Pubs. | R | R | R | | S | P | R | R | | | S | R | |
| VP73 Contr. Master Test Plan | I | I | I | I | S | S | R | P | R | | S | R | |
| VP74 Test Plan VSCS | R | R | R | R | S | S | R | P | R | | S | R | |
| VP75 Test Proc. VSCS | R | R | R | R | S | S | R | P | R | | S | R | S |
| VP76 Test Rpt. VSCS | R | R | R | R | S | S | R | P | R | | S | R | S |
| VP77 Test Plan Proto Upgrade | I | I | I | I | S | S | R | P | I | | S | R | S |
| VP78 Test Proc. Proto Upgrade | I | I | I | I | S | S | R | P | I | | S | R | S |
| VP79 Test Rpt. Proto Upgrade | I | I | I | I | S | S | R | P | I | | S | R | S |
| VP84 Certification Parameters | R | I | R | I | S | P | R | R | I | | S | R | |
| VP86 S/W Stds. & Proc. Manual | R | I | R | I | S | P | R | R | | | S | R | |
| VP87 S/W User's Manual | R | I | R | I | S | P | R | R | | | S | R | |
| VP88 S/W Programmer's Manual | | I | | I | S | P | R | R | | | S | R | |
| VP89 S/W Test Description | R | I | R | I | S | P | R | R | | | S | R | |
| VP90 S/W Test Procedure | R | I | R | I | S | P | R | R | | | S | R | |
| VP91 S/W Indep. Test Plan/Proc. | R | I | R | I | S | P | R | R | | | S | R | |

# FIGURE 10. SITE PREPARATION PHASE - AMC

| SITE PREPARATION PHASE (AMC) **CONTRACTOR** TASK DESCRIPTION | AMA 400 | AMP 1 | AML 1 | AAP 410 | AAP 420 | AOS 500 | ACN 200 | ATR 320 | TOR | QRO | AAP 430 |
|---|---|---|---|---|---|---|---|---|---|---|---|
| Provide Supplemental Support | P | S | S | | | | | | S | | |
| Conduct SAS | S | S | S | S@ | P | S | S | S | S | | S@ |
| Gather Site-Specific Configuration Map Data | D | D | S | | S | | | S | S | | |
| Prepare Site-Specific Schedule | D | D | S | | S | | | | S | | |
| Conduct Site Readiness Survey | S | S | S | S@ | P | S | S | S | S | | S@ |
| Install & Checkout VCET | P | S | S | S@ | S@ | S@ | S | | S | S | |
| Sign-off for Inspection of Delivered VCET Items | S | S | S | | | | | | S | P | S@@ |
| Perform CAI of VCET | S | S | S | S | S | | | | P | S | S@@ |

| SITE PREPARATION PHASE (AMC) **GOVERNMENT** TASK DESCRIPTION | AMA 400 | AMP 1 | AML 1 | AAP 410 | AAP 420 | AOS 500 | ACN 200 | ATR 320 | TOR | QRO | AAP 430 |
|---|---|---|---|---|---|---|---|---|---|---|---|
| Perform Installation/ Integration of VDF/RI IDF to Existing Comm Systems | P | S | S | S@ | S | S | | | S | | |
| Develop VSCS SIP | P | S | S | | S | S | | S | | | |
| Develop Site Procedures for VSCS Maintenance | D | D | S | | S | S | | | | | |
| Develop Site-Specific Shakedown Plan/Procedures[9] | S | S | S | | S | P | | S | | | |
| Generate TSRs for Telco Equipment Relocation | P | S | S | | | | | | S | | |
| Coordinate Power Upgrade Design | S | S | S | | P | | | | | | |
| Coordinate Power Upgrade Implementation | S | P | S | | S | | | | | | |
| Generate FRDF | S | | P | | | | | | S | | |
| Review CDRLs (Site Activation, Site Readiness, SPDIP, Map Generation Report, Certification Parameters, Transition & Maintenance CDRLs) | S | S | S | S@ | P | S | | S | S | S | |

[9] AOS-500 has the responsibility for developing generic ACT SST Plan/Procedures that will be tailored to specific site configurations.

## FIGURE 11. INSTALLATION and CHECKOUT PHASE - AMC

| INSTALLATION & CHECKOUT PHASE (AMC) GOVERNMENT TASK DESCRIPTION | AMA 400 | AMP 1 | AML 1 | AAP 410 | AAP 420 | AOS 500 | ACN 200 | ATR 320 | TOR | QRO | AAP 430 |
|---|---|---|---|---|---|---|---|---|---|---|---|
| Installation of Operational H/W | D | D | D | | S@ | S@ | | | S | S | |
| Perform Operational H/W Installation Test | D | D | D | S@ | S@ | S@ | S | | S | S | |
| Submit, for Review, Operational H/W Test Results | D | D | D | S@ | S@ | S@ | S | | S | S | |
| Arrange Delivery Van Access | P | S | S | | | | | | S | | |
| Provide Staging & Parking Area | P | S | S | | | | | | S | | |
| Develop Inventory of Equipment After Delivery | S | S | S | | | | | | P | S | S |
| Provide Visitor/Clearance Documentation for Installation Personnel | P | S | S[10] | | | | | | S | | |
| Balance HVAC, If Required | S | P | S | | | | | | | | |
| Support Power-Up | S | P | S | | | | | | | | |
| Attend Test Dry-Runs | P | S | S | S@ | S@ | S@ | S | | S | S | |
| Review Site Drawings & Computer Operator Manuals | S | S | S | S | P | S | S | | S | S | |
| Update FRDF | S | | P | | | | | | S | | |
| Review Test Plans & Test Procedures | S | S | S | S | S | S | P | S | S | S | |

[10] Supported by regional Civil Aviation Security Division.

# FIGURE 12. INTEGRATION AND ACCEPTANCE PHASE - AMC

| INTEGRATION & ACCEPTANCE PHASE (AMC) CONTRACTOR TASK DESCRIPTION | AMA 400 | AMP 1 | AML 1 | AAP 410 | AAP 420 | AOS 500 | ACN 200 | ATR 320 | TOR | QRO | AAP 430 |
|---|---|---|---|---|---|---|---|---|---|---|---|
| Install S/W | S | S | S | P@@ | S@ | S | S | | S | S | |
| Perform System S/W Test | S | S | S | P@@ | S@ | S | S | | S | S | |
| Submit, for Review, the System S/W Test Results | S | S | S | P@@ | S@ | S | S | S@ | | S | |
| Perform VCE Integration Tests | S | S | S | P@@ | S@ | S@ | S | | S | S | |
| Submit, for Review, the VCE Integration Test Results | S | S | S | P@@ | S@ | S | S | S@ | | S@ | |
| Sign-off for Inspection of Delivered Contract Items | S | S | S | P@@ | | | | | | D | D |
| Integrate Site Configuration Data | S | S | S | P@@ | S@ | | S | | S | | |
| Perform S/W Tests with Site Configuration Data | S | S | S | P@@ | S@ | | S | | S | | |
| Submit, for Review, the Site Configuration Data S/W Test Results | S | S | S | P@@ | S@ | S@ | S | S@ | | S | |
| Perform Site-Specific Failure Recovery Test | S | S | S | P@@ | S@ | | S | | S | | |
| Submit, for Review, the Site-Specific Failure Recovery Test Results | S | S | S | P@@ | S@ | S@ | S | S@ | | S | |
| Perform CAI | S | S | S | S | S | | S | | P | D | D@@ |
| Submit, for Review, the Final Test Reports | S | S | S | P@@ | S@ | S@ | S | S@ | S | S | |

| INTEGRATION & ACCEPTANCE PHASE (AMC) GOVERNMENT TASK DESCRIPTION | AMA 400 | AMP 1 | AML 1 | AAP 410 | AAP 420 | AOS 500 | ACN 200 | ATR 320 | TOR | QRO | AAP 430 |
|---|---|---|---|---|---|---|---|---|---|---|---|
| Monitor Contractor Site Acceptance Tests | D | D | D | S | S | S | S | S | S | S | S |
| Review Test Reports | S | S | S | S | S | S | P | S | S | S | S |

# FIGURE 13. OPERATIONAL SITE TESTING PHASE - AMC

| OPERATIONAL SITE TESTING PHASE (AMC) CONTRACTOR TEST DESCRIPTION | AMA 400 | AMP 1 | AML 1 | AAP 410 | AAP 420 | AOS 500 | ACN 200 | ATR 320 | TOR | QRO | AAP 430 |
|---|---|---|---|---|---|---|---|---|---|---|---|
| Provide VSCS Contractor Maintenance Support | D | D | D | | | S | | | S | S | |
| Provide VSCS Contractor Engineering Support | D | D | D | | | S | | | S | S | |
| Collect RMS Data for FRACAS Summary CDRL | S | S | S | P | S | S | | | S | | |

| OPERATIONAL SITE TESTING PHASE (AMC) GOVERNMENT TASK DESCRIPTION | AMA 400 | AMP 1 | AML 1 | AAP 410 | AAP 420 | AOS 500 | ACN 200 | ATR 320 | TOR | QRO | AAP 430 |
|---|---|---|---|---|---|---|---|---|---|---|---|
| Commerce Logistics Management | P | S | S | | | S | | | S | | |
| Generate Reconfiguration Procedures | P | S | S | | | S | | S | S | | |
| Validate Failure Recovery Procedures | P | S | S | | | S | | S | S | | |
| Generate All Operational Procedures | P | S | S | | | S | | S | S | | |
| Verify System Maintenance & Certification Procedures | P | S | S | | | S | | | S | | |
| Validate Procedures to Maintain Data Base | P | S | S | | | S | | S | S | | |
| Perform VSCS AF Certification | P | S | S | | | | | S | S | | |
| Conduct System Shakedown[11] | D | D | D | | | S | S@ | S | S | S | |
| Conduct JAI | D | D | D | | | S | | | S | | |
| Update FRDF | S | | P | | | | | | S | | |
| Prepare & Review Shakedown Test Reports | S | S | S | S | S | P@ | S@ | S | S | S | |

[11] AOS-500 has primary responsibility with support from site AF and AT for follow-on system shakedown activities.

# FIGURE 14. ALL PHASES - AMC

| ALL PHASES (AMC) CONTRACTOR CDRL DELIVERABLES | AMA 400 | AMP 1 | AML 1 | AAP 410 | AAP 420 | AOS 500 | ACN 200 | ATR 320 | TOR | QRO | AAP 430 |
|---|---|---|---|---|---|---|---|---|---|---|---|
| VP13 Site Activation Plan | R | R | R | S | P | R | R | I | S | R | S |
| VP14 Site Preparation Design Information Package | R | R | R | S | P | R | R | | S | R | S |
| VP15 Site Readiness Review Report | R | R | R | S | P | R | R | I | S | R | S |
| VP26 Map Generation Report | R | R | I | S | P | R | R | I | S | R | |
| VP54 Maintenance Plan | R | R | | S | P | R | R | | S | R | |
| VP67 Computer Sys. Diag. Manual | R | | | P | S | R | R | | S | R | |
| VP68 Computer Sys. Ops. Manual | R | I | | P | S | R | R | | S | R | |
| VP73 Contr. Master Test Plan | I | I | I | S | S | R | P | R | S | R | |
| VP74 Test Plan VSCS | R | R | R | S | S | R | P | R | S | R | |
| VP75 Test Proc. VSCS | R | R | R | S | S | R | P | R | S | R | S |
| VP76 Test Rpt. VSCS | R | R | R | S | S | R | P | R | S | R | S |
| VP77 Test Plan Proto Upgrade | I | I | I | S | S | R | P | I | S | R | S |
| VP78 Test Proc. Proto Upgrade | I | I | I | S | S | R | P | I | S | R | S |
| VP79 Test Rpt. Proto Upgrade | I | I | I | S | S | R | P | I | S | R | S |
| VP84 Certification Parameters | R | R | R | S | P | R | R | I | S | R | |

# APPENDIX 6. VSCS FIELD STATUS NOTICE PROCEDURE

1. PURPOSE. Field reporting procedures are required to keep VSCS Program participants in FAA headquarters, regions/ facilities, ACT, and AMC aware of ongoing activities at the installation sites. The status notices provide timely, useful, and factual implementation status.

2. RESPONSIBILITIES. The VSCS onsite coordinators have responsibility for submitting the status notice for each facility. The reporting procedure takes effect at each installation site when the VSCS contractor completes the SAS, about 15 months prior to VSCS equipment delivery. The status notice should be submitted weekly, on Friday for the reporting period of Friday through Thursday. If there are no reportable activities for a particular week, a status notice is required stating "No Activity."

3. STATUS NOTICE FORMAT. The status notices are submitted to AAP-420 via the BBS on CC-Mail. Blank status notice forms are maintained on the VSCS BBS in WordPerfect 5.1 format for downloading by the VSCS onsite coordinators. After the form is completed, it should be uploaded to the BBS. Anyone unfamiliar with these procedures may contact AAP-420 for additional information. It is suggested that a hard copy of the status notice be sent to AT and AF at both the facility and the regional office.

4. STATUS NOTICE CRITERIA. The status notice contains a concise summary of the state of installation activities for the week. For activities that have not encountered problems or changes and are proceeding in accordance with the schedules provided in the SAP, the summary may be at a rather high level. For activities in which a problem or change to the implementation criteria has been encountered, a more detailed status notice is required. The status notice should describe in detail the nature of the problem or change, the actions required from all parties, a schedule for resolving the issue, if known, and impact to the overall project.

5. STATUS NOTICE FIELDS EXPLANATION. Figure 15 shows the status notice format. The following is a discussion of the status notice fields.

*Field 1:* Insert the name and office symbol of the VSCS onsite coordinator submitting the report.

*Field 2:* Enter the due date of the status notice.

FIGURE 15. VSCS FIELD REPORTING PROCEDURES

| | |
|---|---|
| **To:** | AAP-420 |
| **From:** | *Field 1* |
| **Date/Week:** | *Field 2* |
| **Subject:** | *Field 3* |
| **Filename:** | *Field 4* |

**Work accomplished during the past week:**

*Field 5*

**Work in progress this week:**

*Field 6*

**Planned work for next week:**

*Field 7*

**Problems/Issues:**

*Field 8*

**Action Items:**

*Field 9*

**Milestones accomplished this Week:**

*Field 10*

**Remarks:**

*Field 11*

*Field 3:* This field identifies the subject for this particular weekly report.

*Field 4:* This field identifies the DOS filename that is attached to the CC-Mail message sent to the VSCS BBS. Data to be sent to the BBS as a file must be named using DOS conventions so that it can be uploaded/downloaded or stored on a PC hard disk or LAN without having to rename it at each step of the process. Figure 16 shows a recommended file naming convention that uses the allowable 11 field positions to maximize the intelligence in the filename.

FIGURE 16. RECOMMENDED DOS FILE NAMING CONVENTION

**SSSMMDDY.RPT**

SSS: ARTCC Site Designator, eg., ZTL for Atlanta, etc.

MM: Calendar month of report, eg., 08 - Aug.

DD: Calendar day of report.

Y: Last digit of calendar year, eg., 1993 = 3

RPT: File extension that just indicates this file is a report.

*Field 5:* Provide a summary of the work accomplished by the VSCS contractor for the previous week. Also summarize major activities completed by the facility/region in support of the VSCS contractor or project. (NOTE: A Microsoft Project file may be submitted as an attached file to provide this information.)

*Field 6:* Provide a summary of the work ongoing this week by the VSCS contractor and by the facility/region in support of the VSCS project.

*Field 7:* Provide a summary of the work planned for next week by the VSCS contractor and by the facility/region in support of the VSCS project.

*Field 8:* List problems or issues that have been identified in the previous week. Identify the nature of the problem, organizations that must take part in the solution, and schedule dependencies. Also provide an update for ongoing issues identified in previous status notices.

*Field 9:* Provide the action plan to resolve the problems/issues identified in field 8. Identify support required to resolve issues.

*Field 10:* Indicate the milestones that have been achieved this week, if any.

*Field 11:* Provide any addition remarks pertinent to this status notice or the VSCS Program in general.

6. STATUS NOTICE DURATION. The status notices are submitted weekly until after the VSCS contractor removes the VSCS transition switch from the facility. Special status notices may be submitted at any time, after formal reporting stops, to document a reportable activity.

7. ADDITIONAL INFORMATION. Additional information on completing this form may be obtained from the VSCS Implementation Branch, AAP-420.

8. EXAMPLE VSCS FIELD STATUS NOTICE. An example VSCS field status notice is contained in figure 17. The sample status notice models a typical site 3 months prior to VSCS equipment delivery. In the example, normal progress is being made by the VSCS contractor with site preparation activities described in the SAP. Planned activities by the FAA are also being accomplished on schedule. A high-level summary is provided for these activities. A hypothetical problem with cable routing is included in the example to explain the "problems field" and the "action field."

FIGURE 17. EXAMPLE VSCS FIELD STATUS NOTICE FORM

**To:** AAP-420
**From:** John Smith, VSCS Onsite Coordinator, Z___
**Date/Week:** July 10, 1993
**Subject:** ZSE Field Status notice #56
**Filename:** ZSE07103.RPT

**Work accomplished during the past week:**
- VSCS Contractor has completed modifications on 12 M-1 consoles.
- F&E has installed six power panels.
- Installation of the VSCS transition switch and VSCS Contractor distribution frames are continuing on schedule as described in the SAP.

**Work in progress this week:**
- Continuing M-1 console modifications
- Continuing installation of power panels

**Planned work for next week:**
- Modify 12 M-1 consoles. A total of 40 M-1 consoles remain to be completed.
- F&E will complete installation of the six remaining power panels.

**Problems/Issues:**
- The VSCS Contractor does not have adequate clearance in control room cable access holes for approximately 20 cables. Three additional access holes must be provided by F&E. The access holes must be provided by August 1 to avoid impacting the overall M-1 console modification schedule.

**Action Items:**
- VSCS Contractor's documented size and location requirements for the access holes are required by July 13.
- VSCS ZSE will coordinate requirement with F&E by July 14.
- Work completion date TBD.

**Milestones accomplished this Week:**
- No major milestones were scheduled or accomplished this week.

**Remarks:** None.

APPENDIX 7. SHAKEDOWN FLOWCHARTS

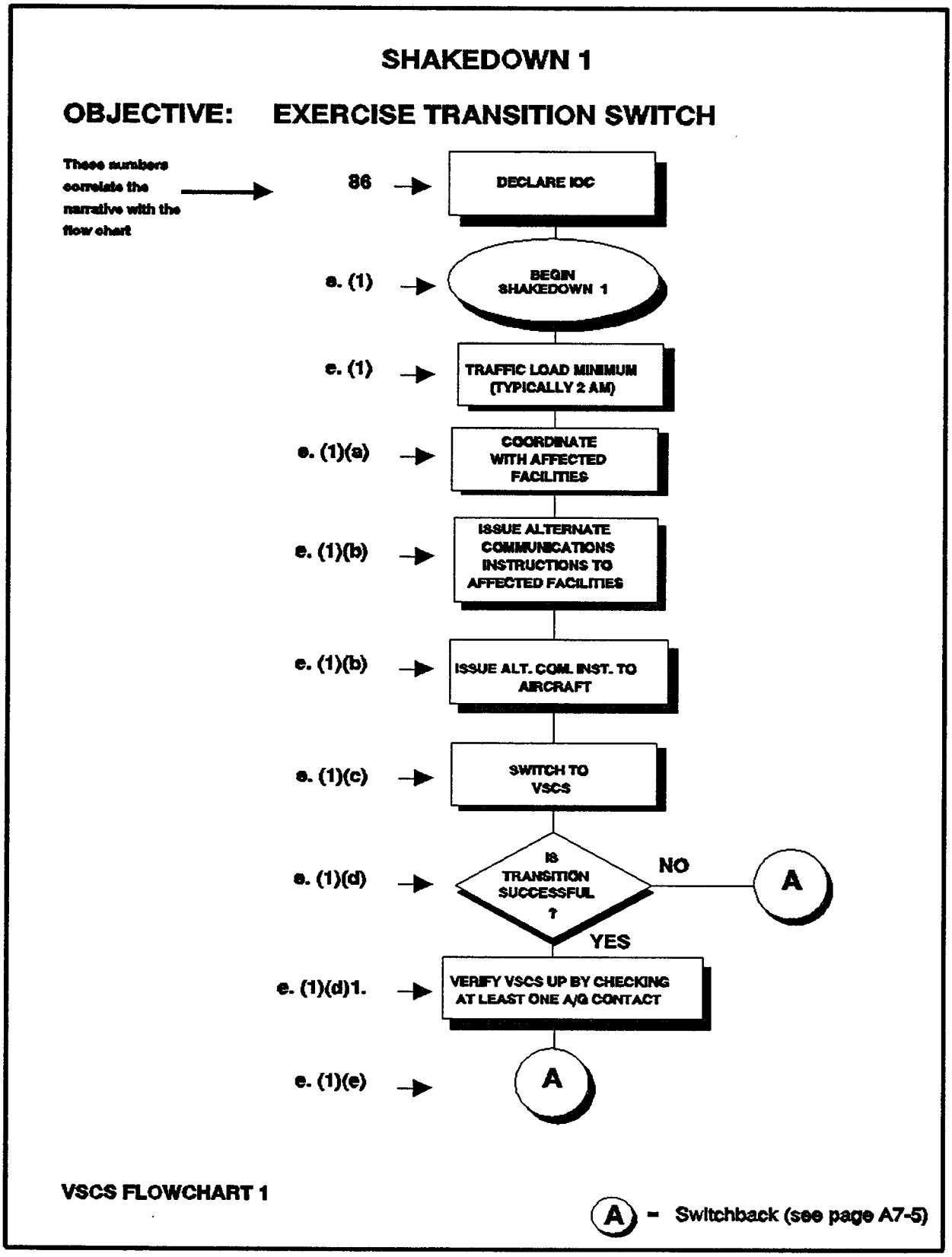

## SHAKEDOWN II

**OBJECTIVE: VERIFY FUNCTIONALITY OF ALL COMMUNICATIONS AND RECONFIGURATION**

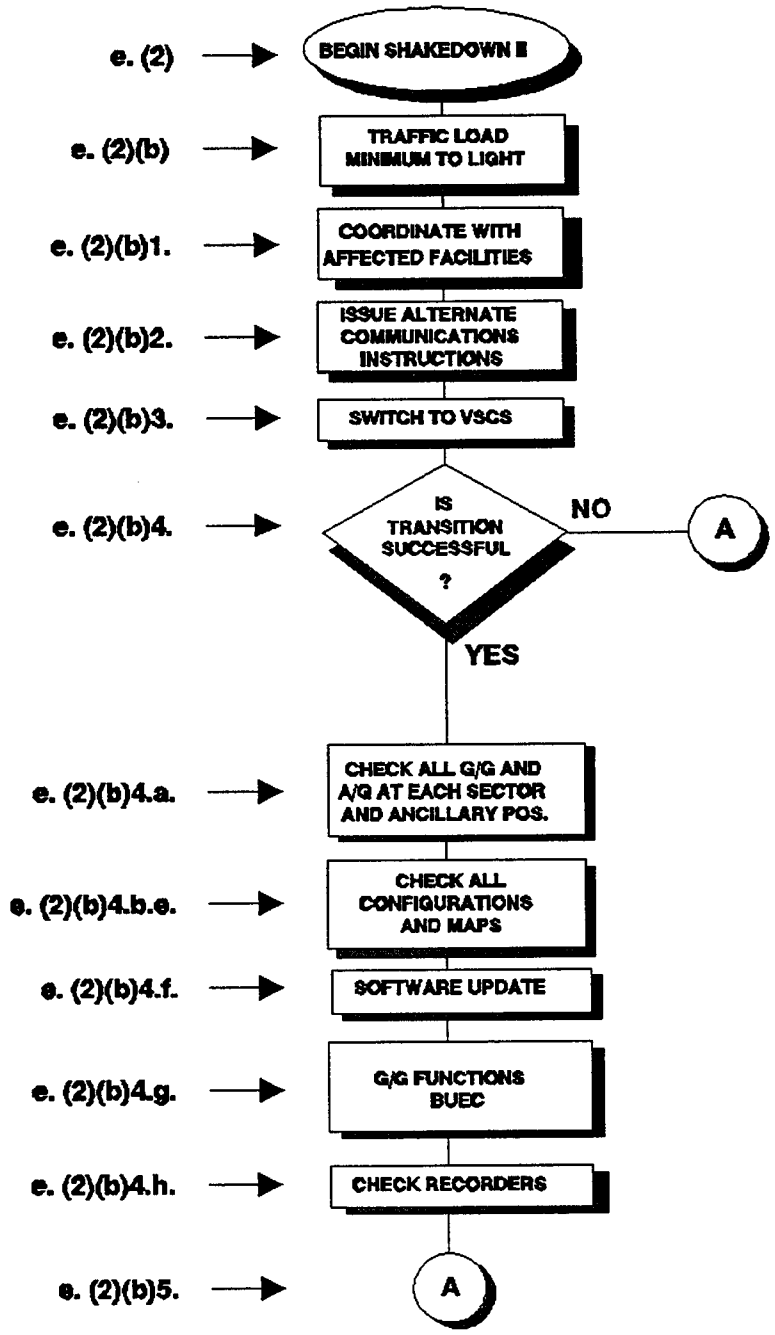


**VSCS FLOWCHART 2**

(A) = Switchback (see page A7-5)

# SHAKEDOWN III

## OBJECTIVE: EXERCISE ALL CREWS AND SECTORS

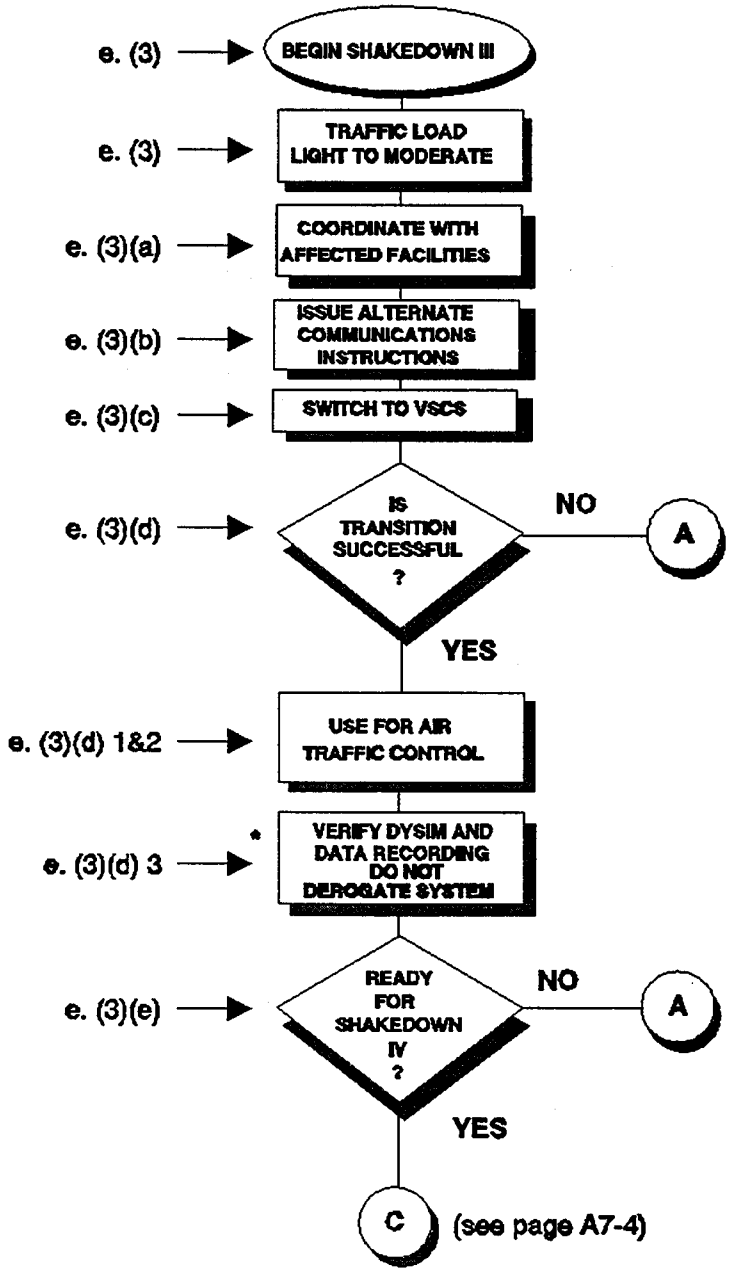


**VSCS FLOWCHART 3**

(A) = Switchback (see page A7-5)

* Verify with moderate trafficload one time only.

## SHAKEDOWN IV

**OBJECTIVE: EXPAND INTO DAY SHIFT, EXPERIENCE HEAVY TRAFFIC, ACHIEVE 24 HOUR (CONTINUOUS) OPERATION.**

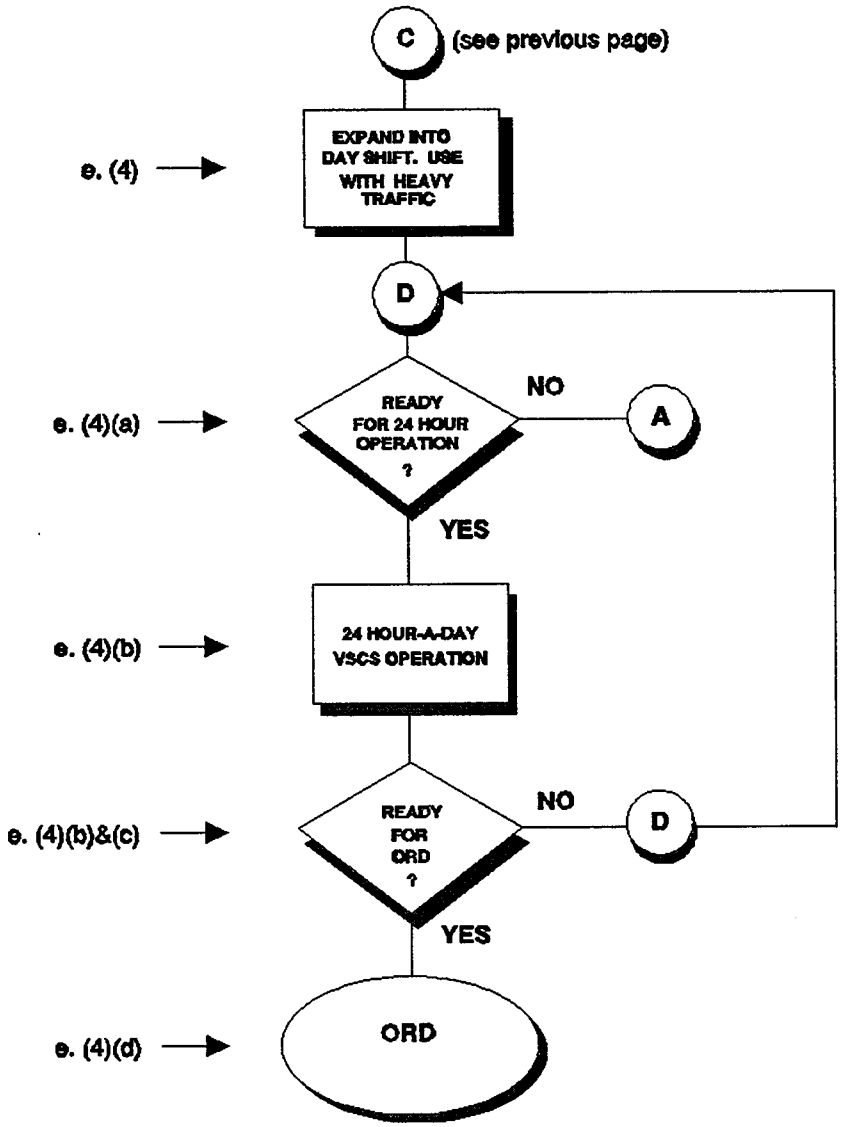


VSCS FLOWCHART 4

(A) = Switchback (see page A7-5)

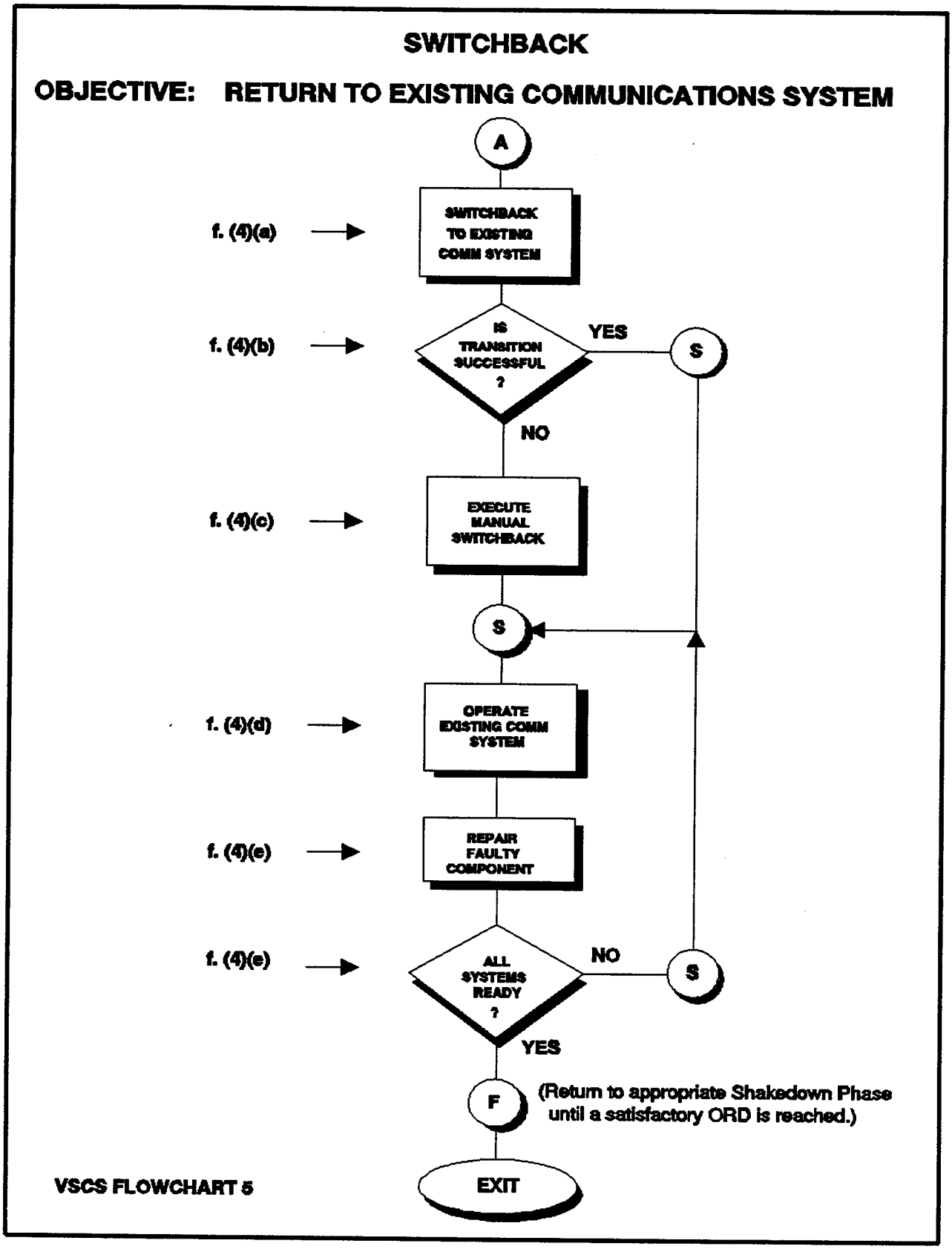
SWITCHBACK
OBJECTIVE: RETURN TO EXISTING COMMUNICATIONS SYSTEM
A
f. (4)(a)
SWITCHBACK TO EXISTING COMM SYSTEM
f. (4)(b)
IS TRANSITION SUCCESSFUL ?
YES
S
NO
f. (4)(c)
EXECUTE MANUAL SWITCHBACK
S
f. (4)(d)
OPERATE EXISTING COMM SYSTEM
f. (4)(e)
REPAIR FAULTY COMPONENT
f. (4)(e)
ALL SYSTEMS READY ?
NO
S
YES
F
(Return to appropriate Shakedown Phase until a satisfactory ORD is reached.)
VSCS FLOWCHART 5
EXIT

Recycled
Recyclable