ORDER

DEPARTMENT OF TRANSPORTATION
FEDERAL AVIATION ADMINISTRATION

6810.2

4/17/89

SUBJ: VERY HIGH FREQUENCY (VHF) OMNIRANGE TEST (VOT) SITING CRITERIA

1. PURPOSE. This order provides guidance and reference material for siting of the very high frequency omnirange test (VOT) facilities in the National Airspace System (NAS).

TABLE OF CONTENTS

Par No.	Title	Page No.
2.	Distribution	1
3.	Background	1
4.	References	2
5.	System Description	2
6.	Site Evaluation	3
7.	Criteria to be Considered	5
8.	Site Survey, Analysis and Testing	8
9.	VOT Siting Responsibilities	8

2. DISTRIBUTION. This order is distributed to division level in the Program Engineering Service, the Offices of Airport Standards and Flight Standards, and the Aviation Standards National Field Office in Washington headquarters; to branch level in the regional Airway Facilities divisions and to the Airway Facilities sectors, sector field offices, sector field office units, and sector field units.

3. BACKGROUND.

a. VOT Function and Types. The VOT emits a test signal to check very high frequency omnidirectional range (VOT) receiver (avionics) integrity and accuracy of indicated bearing (azimuth). The VOT modernization will replace the tube-type facilities currently in use with solid-state equipment. In addition, the new equipment will be installed at sites that have no VOT facility at this time. There are two types of existing VOT equipment: Standard and Area. Standard VOT's are exclusively for ground use; Area VOT's are used both on the ground and in the air. The difference is primarily one of transmitter output power.

b. Power Output Limit. Facilities to be established under the VOT modernization program are Standard VOT's (including replacement equipment for Area VOT's) and will be located at airports to be for GROUND USE ONLY. New VOT equipment power output is limited to 2 watts. In the case of Area VOT service must be mainteained and higher power output is required, the regional Airway Facilities offices should perform engineering tests and submit a NAS Change Proposal (NCP).

c. Extensive Siting Guidance. Order 6630.3, Antenna Configuration Handbook for Terminal and En Route Facilities, provides extensive guidance in siting VHF/UHF antennas in the terminal environment. Order 6630.3 contains excellent technical information and should be used to resolve technical VOT antenna siting issues that are found to be beyond the scope of this document.

d. Intent. The intent of this order is to present an overview of siting and installation considerations specific to the VOT program. Detailed technical guidance can be found in order 6630.3.

4. REFERENCES.

a. Order 6630.3	Antenna Configuration Handbook for Terminal and En Route Facilities
b. Order 6820.10	VOR, VOR/DME, and VORTAC Siting Criteria
c. Order 6030.45	Facility Reference Data File
d. Order OA P 8200.1	United States Standard Flight Inspection Manual

5. SYSTEM DESCRIPTION.

a. Concept. To provide a calibration signal for airborne VOR receivers, the VOT must essentially transmit a simulated VOR signal having the same components as the true signal. The VOT transmits a signal with both the reference and variable signals in phase, independent of direction from VOT. This results is a specified indication on the aircraft VOR receiver of ZERO DEGREES FROM regardless of aircraft position with respect to the VOT. The VOT and VOR systems are briefly described below.

b. VOR System. Both the conventional VOR and Doppler VOR operate in the 108 to 118 MHz frequency band. Both VOR's provide separate 30 Hz reference and variable signals to the airborne avionics for phase comparison to determine the azimuth of the aircraft from the VOR size. The phase difference between the two 30 Hz amplitude and frequency modulated (AM/FM) components is equal to the azimuth (in degrees clockwise from magnetic north) with respect to the VOR site.

(1) Conventional. The conventional VOR provides the reference signal via a 9960 Hz subcarrier that is frequency modulated (FM) at a 30 Hz rate. In addition, a 30 Hz variable signal amplitude modulates the carrier frequency with its phase lagging the 30 Hz reference component proportional to the azimuth of the avionics from the VOR.

(2) Doppler. The doppler VOR provides fixed 30 Hz AM reference signal and a 30 Hz variable signal advancing counterclockwise, which also produces a phase difference proportional to the azimuth of the avoinics from the VOR.

c. VOT System.

(1) General. Like VOR, the VOT transmits an omnidirectional, horizontally polarized field pattern in the 108 to 118 MHz band. This pattern is simultaneously modulated by two in-phase 30 Hz signals that duplicate the frequency of the VOR reference and variable signals. Because the modulation components of this test signal are always in phase, the two signals will produce the same reading on an aircraft course deviation indicator (CDI) as though the aircraft receiver were located at magnetic north (zero-degrees from) with respect to the VOT regardless of its actual position. If required, the CDI is adjusted to read zero-degrees as a part of preflight checks.

(2) Equipment Configuration. Figure 2-1 shows typical VOT equipment and appendix 1 contains preliminary VOT antenna drawings. Detailed technical information on the VOT can be obtained from the equipment specification (FAA-G-2768).

6. SITE EVALUATION.

a. General. The VOT modernization program includes both the replacement of obsolete equipment at existing facilities and the installation of equipment at new locations. Siting requirements at specific airports vary, so installation locations are determined on a site-by-site basis. The VOT will be installed in an existing facility (e.g., airport tower, ATCT, RTR, FSS, radar facility) which complies with the system requirements (installation instructions will be provided in the VOT equipment instruction manuals). In general, VOT's which will replace existing Standard VOT's can be located at the same sites and use existing hardware (including racks, antenna mounts, etc.). Standard VOT's which replace Area VOT's are subject to the establishment criteria below since they may require different installation locations.

b. Operational Characteristics. The operational characteristics of the VOT make them inherently simple to site and install. For this reason, FAA personnel familiar with VHF equipment and antennas should have sufficient expertise to site and install the VOT's. This order will not address technical antenna issues in depth (see Order 6630.3), but will discuss practical considerations for the VOT. The information contained in this order will be sufficient for siting at most locations.

c. General Siting Procedures. In general, VOT siting will proceed as follows:

(1) A location for the equipment and antenna will be chosen based on the general guidance provided in this order. Burn-in and shakedown tests will follow installation and site survey.

(2) The facility will be flight checked (by taxiing aircraft on the ground) as described in Order OA P 8200.1.

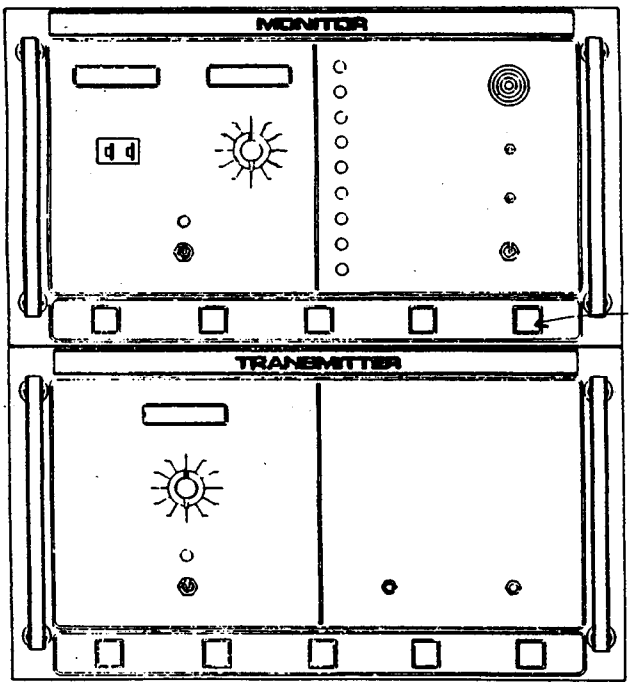

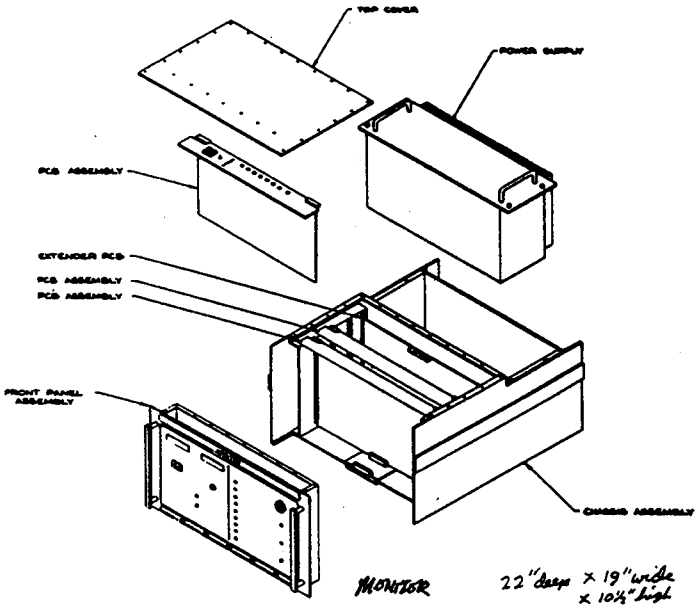

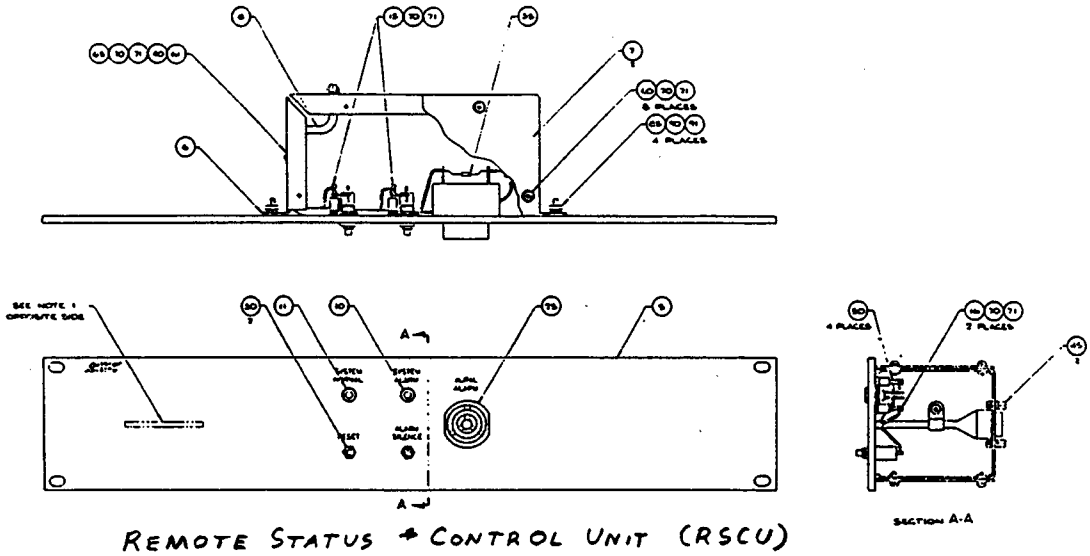

FIGURE 2-1. TYPICAL VOT EQUIPMENT

(3) If the system passes, it will undergo commissioning/acceptance tests; otherwise it will be necessary to refer to the documents referenced in this order to resolve the technical problems.

d. Commissioning and Acceptance. Commissioning and acceptance procedures are in accordance with Order 6030.45, and with site shakedown procedures.

7. CRITERIA TO BE CONSIDERED.

a. Coverage. The most important consideration in evaluating a site for installation of the VOT is ensuring that adequate coverage is provided. While signal coverage in all areas within the airport boundaries accessible to aircraft is desirable, locations of primary concern are taxiways, run-up areas, parking ramps, etc. Because the in-phase signals from a VOT provide a zero-degree reading independent of receiver bearing, longitudinal multipath effects are not likely to be a source of bearing accuracy problems. Signal coverage problems due to vertical lobing are not relevant since airborne use is not authorized.

b. Interference. The immediate area must be free from sources of signal interference at the low elevation angles typical of VOT user areas. To minimize this problem, the antenna should be:

(1) Mounted on the roof of the facility in which the VOT is installed.

(2) Placed at least several wavelengths (approximately 30 feet) away from any nearby object (particularly other transmitting antennas); minimum separation distance is 6 feet.

(3) Sited to avoid large metallic objects close to or in line-of-sight of the coverage area. Such objects ay affect the coverage by reradiating, reflecting, or blocking the signal.

c. Line-of-Sight/Obstructions. To the extent possible, the VOT antenna should have a direct line-of-sight to the areas of interest listed in paragraph 7a above. The antenna should be placed so that the minimum required signal coverage (15 microvolts receiving antenna input strength from the 2.0 W transmitter output) is achieved throughout these areas. Additional guidance is available in the VOT section of order OA P 8200.1. The VOT transmitted has a integral attenuator which provides a 15 dB power output reduction in 1 dB increments. In cases where 100 percent line-of-sight coverage is not possible, antenna placement should minimize the areas shadowed by buildings, towers, antennas, and other obstructions.

d. Interference with Other Antennas. Order 6630.3, chapter 3, contains siting principles which address such issues as antenna pattern distortion, receiver desensitization, transmitter intermodulation product interference, receiver and intermodulation spurious response, antenna spacing and frequency separation. In general, these issues will not present any problems, but

specific sites may require consideration of one or more of these factors to determine optimal VOT antenna placement. In addition, the effect which the newly installed VOT antenna has on existing antennas and signal patterns must be considered. Since the VOT is small and transmits low power, no problems are anticipated. However, there is one configuration to be avoided; the VOT antenna should not be located within 100 feet of an airport VOR or localizer since their similar signals/frequencies and high power output could interfere with operation of the VOT.

e. Antenna Cable Length. The VOT equipment specification states that the transmitter-to-antenna and monitor loop-to-monitor cable shall not exceed 100 feet (max) of RG 214 coax, which corresponds to 2.4 dB of transmission loss at 118 MHz. At installations where the separation between the VOT and its antenna requires a cable length greater than 100 feet (thereby causing greater line loss), a lower loss cable type (such as RG 331 or RG 333) should be used. Refer to Order 6630.3, chapter 2, section 1, for a detailed discussion of transmission lines and formulas for calculating signal loss rates for verious cable types. Double shielded cables should be used.

Cable Type	Line loss (dB) at 118 MHz for 100 ft cable
RG 214/U	2.4 dB
RG 331/U	0.88 dB
RG 333/U	0.57 dB

f. Antenna Height. The required installed VOT antenna height will be determined by a tradeoff of a least two factors. The first is that the antenna must be placed sufficiently high to achieve the line-of-signt requirements of paragraph 7b. The second factor is that the antenna should be placed as low as possible so that it is below the level of other antennas to minimize any interference as described in paragraph 7c. The antenna shall not penetrate any Part 77 surface. The antenna will be supported on a 2.5-inch galvanized pipe with threaded connections. A #6 bare copper wire connected to the antenna/pipe assembly will provide grounding and lightning protection.

g. VOT Equipment Placement. The VOT transmitter/monitor consists of two equipment drawers (each 10 1/2 inches high) which mount in a standard 19-inch equipment rack. The equipment is designed to operate from standard 120 VAC power and in FAA-G-2100d, environment II conditions (-10 to 50 degrees C or 14 to 122 degrees F, 5 to 90 degrees RH). More detailed requirements can be found in the VOT equipment instruction book, but facilities which meet these environmental and power criteria can be considered for equipment placement. Installation effort will be greatly reduced if the VOT equipment is located in the tower equipment room. This will reduce or eliminate trenching/cable routing for the RSCU cable described below.

h. Remote Status and Control Unit (RSCU) Placement. The RSCU is a small panel which provides five VOT control/monitoring functions. The RSCU interface to the VOT equipment cabinet will be via one dedicated cable consisting of twisted-pair wires for the five functions.

(1) VOT normal indicator.

(2) VOT alarm indicator.

(3) Aural alarm (speaker).

(4) Alarm silence button.

(5) VOT monitor reset button.

i. RSCU Interface. The RSCU interface to the VOT equipment cabinet will be via one dedicated cable consisting of twisted-pair wires for the five functions.

(1) Cable. The FAA Depot stocks cable which meets the requirement for the RSCU interface to the VOT equipment cabinet. Either six-pair, 19 AWG exterior or Armored/direct-burial cable is available (NSN's: 6145-01-066-49491 and 6145-01-066-49481). Final cable selections will be determined at the first system shakedown testing with installation instructions to be provided to each site. Five of the six pairs will be used.

(2) Placement. The placement of the RSCU should be in a room where controllers or maintenance technicians normally monitor air traffic control equipment status. The recommended location is the tower cab, with the alternative being the facility maintenance room.

(3) Push-to-Talk Function. Regional and local plans to utilize the VOT push-to-talk function will also be a consideration. The VOT has a microphone jack on the monitor front panel. Use of a remote microphone requires a 4 conductor interface to a terminal block connection provided at the rear of the monitor. The remote push-to-talk can be implemented with the RSCU cable recommended above. The 12 available conductors can be reallocated to provide all necessary functionality.

j. Obstruction Lights. (Refer to FAA Advisory Circular 150/5345-2). If required, an obstruction light may be mounted on top of the threaded pipe. In this case, AC power wires (3 conductors, 12 AWG) must be fished through the pipe for connection to the light fixture. A terminal block is provided at the base of the pipe to provide wire connections.

8. SITE SURVEY, ANALYSIS, AND TESTING.

a. Purpose. The primary purpose of the site survey is to select a site which will provide the required coverage (see paragraph 7a). The information obtained during the site survey is sufficient to prepare site drawings. The survey will document and ensure that the antenna does not penetrate any Part 77 surfaces. The site drawings must include a vicinity sketch, site plan, and horizon profile. The survey will establish (and document in the various drawings) a dimensional description of the site, including the locations and heights of prominent adjacent buildings and obstructions. A set of accurately registered panoramic photographs may be substituted for the horizon profile.

b. Testing. Equipment testing can occur only after installation is complete. The equipment instruction book supplied with the VOT will contain test procedures. Procedures for verifying signal integrity and coverage are contained in Order OA P 8200.1.

c. Siting Information. Extensive siting information for equipment utilizing the VOT frequencies can be found in Order 6820.10. Should any technical siting problems arise, refer to this order. Airport topography does not normally present significant siting problems, so the information in these documents is not normally required.

d. Required Equipment. A calibrated VOR receiver is required for VOT site surveys. Siting and coverage requirements are discussed in paragraph 7.

9. VOT SITING RESPONSIBILITIES.

a. Program Officer (APS-420). The program office is responsible for overall VOT program management including technical monitoring, acquisition and implementation planning, and fiscal and physical status accounting.

b. National Airway Engineering Field Support Sector (ASM-150). ASM-150 shall perform shakedown testing on the test and evaluation system (first unit), finalize the information contained in this order, and provide common JAI data sheets and generic site shakedown test procedures to be used for regional VOT installations. In addition, ASM-150 shall provide configuration management for VOT technical documentation and second-level engineering support.

c. Regional and sector Airway Facilities offices shall be responsible for all tasks associated with field implementation of the VOT as specified by Order 6030.45. Specific responsibilities include: site survey, site preparation, equipment installation and removal (if required), shakedown and burn-in testing, flight check, JAI/Operational Readiness Demonstration, commissioning and decommissioning (if required), certification, repair, and maintenance.

d. Other Responsibilities. All other responsibilities are assigned in the latest edition of Order 6790.13, VHF Omnirange Test (VOT) Facility System Implementation Plan/System Program Plan.

Robert E. Brown
Director, Program Engineering Service

APPENDIX 1. ANTENNA DRAWINGS

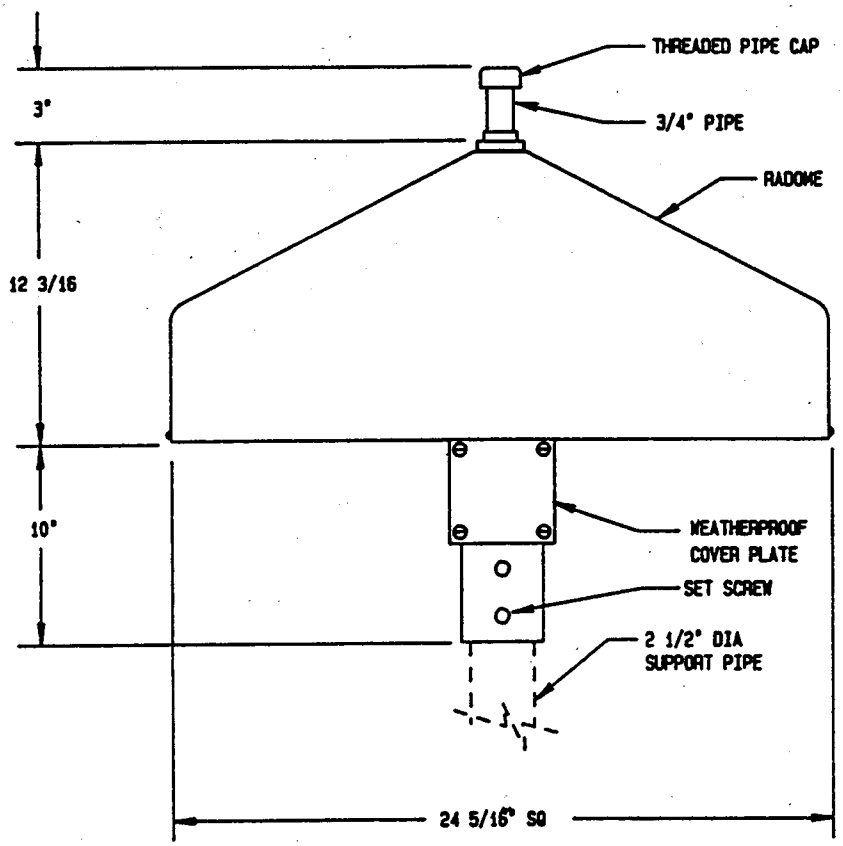

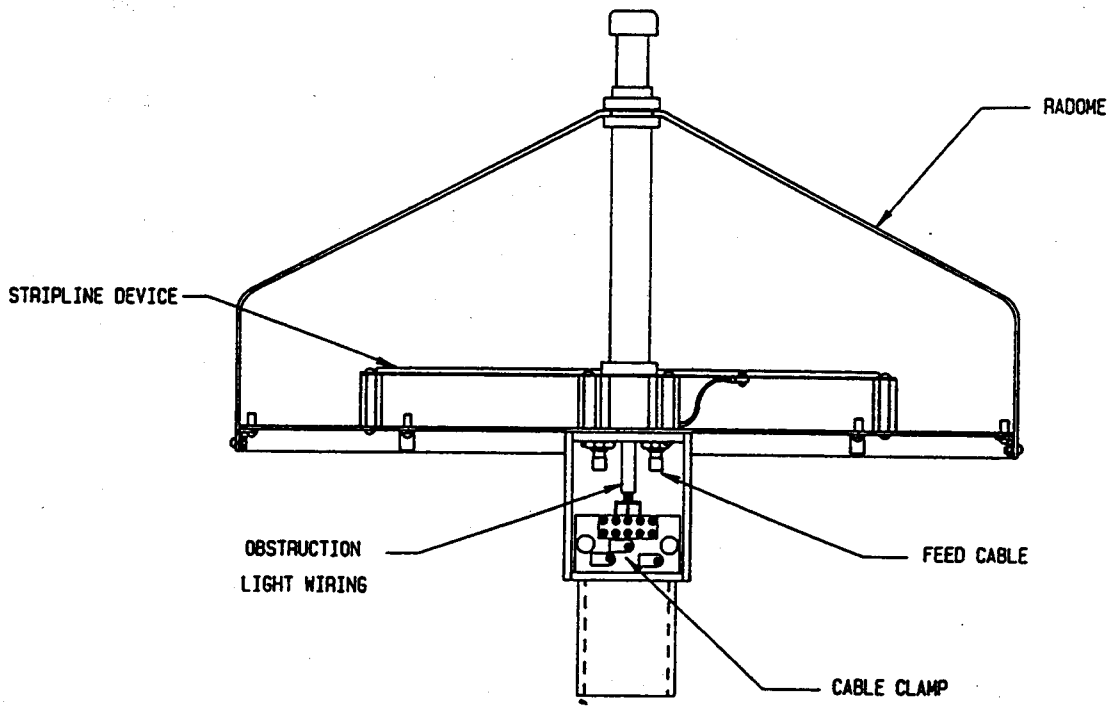

VOT ANTENNA ASSEMBLY

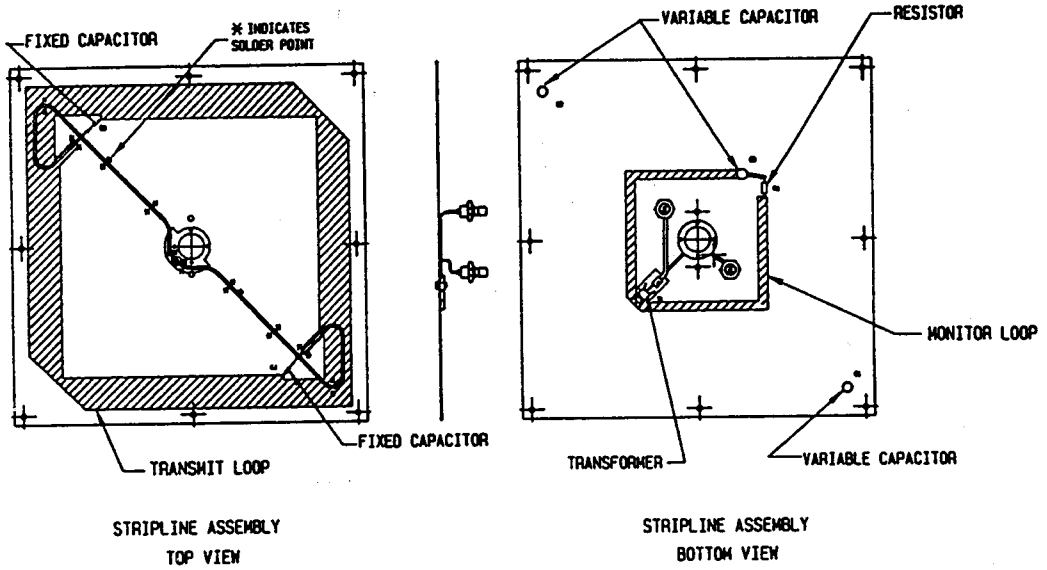

STRIPLINE ASSEMBLY

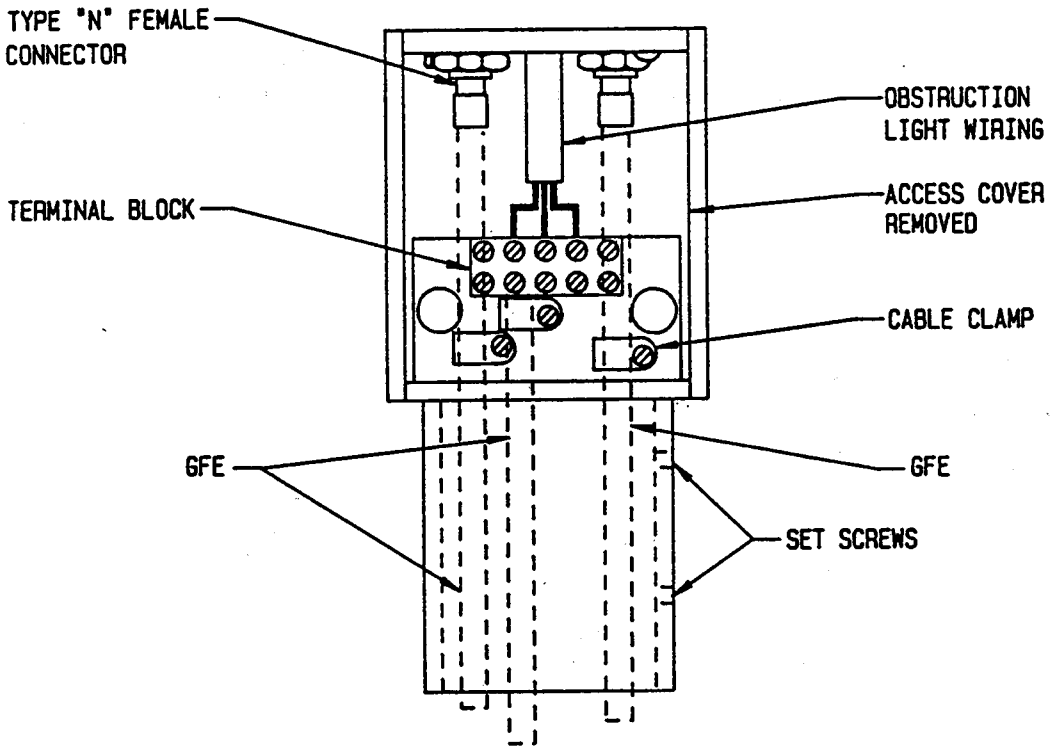

VOT ANTENNA BASE