CHANGE

U.S. DEPARTMENT OF TRANSPORTATION
FEDERAL AVIATION ADMINISTRATION

8400.10 CHG 10

12/20/94

SUBJ: AIR TRANSPORTATION OPERATIONS INSPECTOR'S HANDBOOK

1. PURPOSE. This change transmits new and revised sections of the handbook and includes repagination and typesetting of some sections that have minor editorial changes.

2. EXPLANATION OF CHANGES. Significant areas of new direction, guidance, and policy included in this change are as follows:

a. Volume 1, chapter 1, contains information on the availability of inspector handbooks and bulletins and an updated acronym list. Chapter 4, section 2, includes new paragraphs concerning self-disclosure cases and in-flight smoking regulations. New paragraphs in section 4 discuss deviations for military contract operations and the use of Federal Aviation Administration (FAA) Form 8430-6, "Admission to Flight Deck." Chapter 4 includes a new section, "Custodians of Data Bases."

b. Volume 2, chapter 2, section 5, includes a note that explains Flight Standards policy regarding the placement of business names on Federal Aviation Regulations (FAR) Part 135 air carrier certificates. Chapter 4 contains a new paragraph concerning surveillance of foreign air carriers.

c. Volume 3, chapter 1, includes new information regarding operations specifications: a subparagraph concerning use of flight directors by operators flying "Special Aircrew and Aircraft Authorization Required" (special Category I (CAT I)) minimums; and two paragraphs concerning CAT II and CAT III instrument approach and landing operations for helicopters. Chapter 2, section 3, includes a note concerning Boeing 757 wake turbulence and a paragraph on drug/alcohol testing program approval. Section 6 includes information on line-oriented flight training and on view-limiting devices. Chapter 4 contains four new sections on the Advanced Qualification Program. Chapter 6 contains a note concerning crew medical qualification and procedures during temporary medical deficiency. Chapter 8 introduces a section on air carrier management effectiveness. Chapter 12, section 2, contains two new paragraphs concerning aircraft noise and airtour/sightseeing operations. Chapter 14 contains new information concerning flight attendant training. Chapter 15 contains information on aircraft rescue and firefighting, on the use of portable electronic devices, and on procedures for checklist interruptions.

d. Volume 4, chapter 1, contains guidance for the use of aircraft equipment suffix /G, a paragraph concerning air transportation operations within the former Soviet Union, and a new section that discusses communications equipment requirements for FAR Parts 121 and 135 overwater operations. Chapter 2 contains information regarding the use of automatic landing systems (Autoland) to meet recency of experience requirements. Chapter 5 contains information regarding life flights. Chapter 9 introduces two sections on low visibility taxi operations.

e. Volume 5 contains information concerning eligibility requirements for the airline transport pilot and flight engineer (FE) written (knowledge) tests and policy regarding FE applicants retesting within 30 days of failure. Chapter 9, section 2, contains information regarding the replacement of certificates.

f. Volume 6 contains a new section on surveillance of the FAA Flight Program.

g. Volume 7 contains a newly developed paragraph for inspector reporting of incidents.

h. Volume 9 contains two new sections: one concerning the responsibilities of aviation safety inspectors and one on personal ethics and conduct.

i. Effective July 5, 1994, the Federal Aviation Act of 1958 (FA Act) was rescinded and recodified into Title 49, United States Code (U.S.C.). As the handbook undergoes revision, all references to the FA Act will be changed to reflect the appropriate section of Title 49, U.S.C.

j. An updated Appendix 3 in this change contains all current handbook bulletins. This change incorporates and cancels the following electronically published Flight Standards bulletins:

(1) HBAT 90-4, "New Federal Aviation Regulation Part 91 Cross-Reference Table."

(2) HBAT 91-1, "Use of Halon Extinguishing Agents During Firefighting Drills."

(3) HBAT 91-2, "Implementation of Category D Repair Interval for Master Minimum Equipment List (MMEL)."

(4) HBAT 91-9, "Endorsement of Flight Engineer Applicants Retesting Within 30 Days of Failure."

(5) HBAT 91-16, "Use of Flight Crewmembers During a Known Medical Deficiency."

(6) HBAT 91-18, "Drug Testing Program Approval and Inclusion in Basic Indoctrination and Recurrent Training."

(7) HBAT 91-24, "Use of Portable Electronic Devices."

(8) HBAT 91-28, "Wet Ditching Training."

(9) HBAT 91-34, "Compliance with Smoking Regulations for Inflight Operations."

(10) HBAT 91-36, "Aircraft Emergency Evacuation While Parked and Aircraft Rescue, Firefighting (ARFF) Emergency Notification Procedures While Parked."

(11) HBAT 92-01, "AirTour/Sightseeing Operations."

(12) HBAT 92-06, "Pilot-in-Command Age Requirement for Part 129 Operators."

(13) HBAT 92-07, "Surveillance of Foreign Air Carriers."

(14) HBAT 92-08, "Communication Equipment Requirements for Overwater Operations Conducted Under Parts 135 and 121."

(15) HBAT 92-12, "Air Transportation Operations Within the Former Soviet Union."

(16) HBAT 92-13, "Operations in Sensitive International Areas."

(17) HBAT 92-14, "Inspector Procedures for the Surveillance of FAA Flight Programs."

(18) HBAT 93-01, "B-747 Upper Deck Megaphone Provisions: Passenger-Carrying Operations."

(19) HBAT 93-05, "FAR Part 129 Operations Specifications: Age-60 Limitation."

(20) HBAT 93-06, "Meeting Recency of Experience Requirements Through the Use of Automatic Landing Systems (Autoland)."

(21) HBAT 93-09, "Noise Abatement Departure Profiles."

(22) HBAT 94-01, "Crediting Training Time to Two Pilots in Line-Oriented Flight Training (LOFT)."

(23) HBAT 94-04, "'Special Aircrew and Aircraft Authorization Required' CAT I Minimums: Revised."

(24) HBAT 94-05, "Low Visibility Taxi Operations."

(25) HBAT 94-07, "Revised: Checklist Interruptions."

(26) FSAT 92-28, "Protective Breathing Equipment (PBE) Revised Training Information."

(27) FSAT 92-35, "Deviations for Military Contract Operations (FAR 121.57)."

(28) FSAT 93-21, "Life Flights."

(29) FSAT 93-22, "Placing Business Names on Part 135 Air Carrier Certificates."

(30) FSAT 93-24, "Inspector Resources Data Base."

(31) FSAT 93-29, "Cabin Door Operating Mechanisms."

(32) FSAT 93-39, "Guidance for Use of /G Equipment Suffix."

(33) FSAT 93-40, "Changes in Self Disclosure and Remedial Training Programs."

(34) FSAT 93-42, "Availability of Aviation Safety Inspector Handbooks."

(35) FSAT 94-02, "Wake Turbulence Accident Prevention Program."

3. DISPOSITION OF TRANSMITTAL. This transmittal is to be RETAINED AND FILED IN THE BACK OF THIS HANDBOOK until it is superseded by a new basic order.

PAGE CONTROL CHART

Remove Pages	Dated	Insert Pages	Dated
Handbook Table of Contents, i thru viii	11/02/94	Handbook Table of Contents, i thru viii	12/20/94
Volume 1 Table of Contents, i thru iii	11/02/94	Volume 1 Table of Contents, i thru iii	12/20/94
1-1 and 1-2 (thru 1-8)	9/30/92	1-1 - 1-3 (thru 1-8)	12/20/94
1-35 - 1-37 (thru 1-40)	6/30/91	1-35 - 1-37 (thru 1-40)	12/20/94
1-41 - 1-43 (thru 1-44)	7/31/90		
1-45 (and 1-46)	7/31/90		
1-47 - 1-52 (thru 1-56)	7/31/90	1-41 - 1-47 (thru 1-56)	12/20/94
1-57 - 1-60 (thru 1-80)	7/31/90	1-57 - 1-60 (thru 1-64)	12/20/94
1-101 - 1-104 (thru 1-110)	9/30/92	1-101 - 1-108 (thru 1-110)	12/20/94
1-117 - 1-123 (thru 1-128)	8/23/88	1-117 - 1-126 (thru 1-128)	12/20/94
1-129 (thru 1-139)	8/23/88	1-129 - 1-132 (thru 1-138)	12/20/94
1-140 - 1-143 (thru 1-150)	8/23/88	1-139 - 1-142 (thru 1-150)	12/20/94
Volume 2 Table of Contents, i thru v	11/02/94	Volume 2 Table of Contents, i thru v	12/20/94
2-85 and 2-86 (thru 2-91)	8/23/88	2-85 and 2-86 (thru 2-90)	12/20/94
2-92 (thru 2-97)	8/23/88	2-91 and 2-92 (thru 2-96)	12/20/94
2-98 - 2-100	8/23/88	2-97 - 2-100	12/20/94
2-183 - 2-185 (thru 2-193)	8/23/88	2-183 - 2-185 (thru 2-192)	12/20/94

PAGE CONTROL CHART—CONTINUED

Remove Pages	Dated	Insert Pages	Dated
2-194 and 2-195 (thru 2-203)	8/23/88	2-193 and 2-194 (thru 2-202)	12/20/94
2-204 (thru 2-209)	8/23/88	2-203 (thru 2-208)	12/20/94
2-210 and 2-211 (thru 2-216)	8/23/88	2-209 - 2-211 (thru 2-216)	12/20/94
Volume 3 Table of Contents, i thru xvii	11/02/94	Volume 3 Table of Contents, i thru xviii	12/20/94
3-73 and 3-74	3/15/90	3-73 and 3-74	12/20/94
3-85 - 3-90	3/15/90	3-85 - 3-90	12/20/94
3-105 (and 3-106)	11/02/94		
3-107 and 3-108	3/15/90		
3-109 (thru 3-122)	7/28/92	3-105 - 3-113 (thru 3-122)	12/20/94
3-207 - 3-211 (thru 3-217)	6/16/89	3-207 - 3-212 (thru 3-216)	12/20/94
3-218 - 3-226 (thru 3-232)	6/16/89	3-217 - 3-225 (thru 3-232)	12/20/94
3-255 and 3-256	6/16/89	3-255 and 3-256	12/20/94
3-269 - 3-272	6/16/89	3-269 - 3-272	12/20/94
3-381 and 3-382	8/31/90	3-381 and 3-382	12/20/94
3-387 and 3-388	8/31/90	3-387 and 3-388	12/20/94
3-413 (thru 3-524)	7/28/92	3-413 - 3-420 (thru 3-430)	12/20/94
		3-431 - 3-437 (thru 3-448)	12/20/94
		3-449 and 3-450 (thru 3-460)	12/20/94
		3-461 (thru 3-524)	12/20/94
3-595 (thru 3-602)	9/10/93	3-595 (thru 3-602)	12/20/94
3-697 (thru 3-716)	8/23/88	3-697 - 3-701 (thru 3-716)	12/20/94
3-961 and 3-962	9/30/92	3-961 and 3-962	12/20/94
3-989 and 3-990 (thru 3-998)	11/02/94	3-989 - 3-992 (thru 3-998)	12/20/94
3-1073 - 3-1094	8/31/90		
3-1095 (thru 3-1104)	11/02/94	3-1073 - 3-1092 (thru 3-1104)	12/20/94
3-2069 - 3-2073 (thru 3-2080)	11/02/94	3-2069 3-2074 (thru 3-2080)	12/20/94
3-2087 - 3-2091 (thru 3-2094)	11/02/94	3-2087 - 3-2092 (thru 3-2094)	12/20/94
3-2109 - 3-2115 (thru 3-2122)	6/30/91	3-2109 - 3-2116 (thru 3-2122)	12/20/94
Volume 4 Table of Contents, i thru ix	11/02/94	Volume 4 Table of Contents, i thru ix	12/20/94
4-23 - 4-26 (thru 4-32)	9/10/93	4-23 - 4-26 (thru 4-32)	12/20/94
4-65 and 4-66 (thru 4-120)	9/10/93	4-65 - 4-69 (thru 4-80)	12/20/94
		4-81 and 4-82 (thru 4-120)	12/20/94
4-137 - 4-139 (thru 4-145)	6/16/89	4-137 - 4-140 (thru 4-144)	12/20/94
4-146 - 4-167 (thru 4-172)	6/16/89	4-145 - 4-164 (thru 4-172)	12/20/94
4-175 and 4-176	7/31/90	4-175 and 4-176	12/20/94
4-759 - 4-762 (thru 4-774)	7/28/92	4-759 - 4-762 (thru 4-774)	12/20/94
4-775 and 4-776 (thru 4-788)	7/28/92	4-775 and 4-776 (thru 4-788)	12/20/94
		4-1141 and 4-1142 (thru 4-1152)	12/20/94
		4-1153 (thru 4-1164)	12/20/94
Volume 5 Table of Contents, i thru vii	11/02/94	Volume 5 Table of Contents, i thru vii	12/20/94
5-23 - 5-30	11/02/94	5-23 - 5-30	12/20/94
5-30-1 (and 5-30-2)	11/02/94	5-30-1 (and 5-30-2)	12/20/94
5-37 - 5-45 (thru 5-51)	3/15/90	5-37 - 5-44 (thru 5-50)	12/20/94
5-52 - 5-62	3/15/90		

PAGE CONTROL CHART—CONTINUED

Remove Pages	Dated	Insert Pages	Dated
5-63 (thru 5-68)	11/02/94	5-51 - 5-61 (thru 5-68)	12/20/94
5-133 - 5-139 (thru 5-145)	3/15/90	5-133 - 5-139 (thru 5-144)	12/20/94
5-146 - 5-154 (thru 5-160)	3/15/90	5-145 - 5-154 (thru 5-160)	12/20/94
5-465 - 5-470	9/30/92	5-465 - 5-470	12/20/94
Volume 6 Table of Contents, i thru iv	11/02/94	Volume 6 Table of Contents, i thru iv	12/20/94
6-435 (thru 6-448)	9/10/93	6-435 and 6-436 (thru 6-448)	12/20/94
Volume 7 Table of Contents, i	11/02/94	Volume 7 Table of Contents, i	12/20/94
7-13 and 7-14 (thru 7-26)	9/30/92	7-13 - 7-15 (thru 7-26)	12/20/94
Volume 8 Table of Contents, i and ii	11/02/94	Volume 8 Table of Contents, i and ii	12/20/94
Volume 9 Table of Contents, i	11/02/94	Volume 9 Table of Contents, i	12/20/94
9-1 (thru 9-22)	9/30/92	9-1 - 9-3 (thru 9-22)	12/20/94
9-23 (thru 9-44)	9/30/92	9-23 - 9-26 (thru 9-44)	12/20/94
		Appendix 2, 1 and 2	12/20/94
Appendix 3, i (and all handbook bulletins)	7/28/92	Appendix 3, 1 thru 32	12/20/94

William J. White
Deputy Director, Flight Standards Service

HANDBOOK TABLE OF CONTENTS

VOLUME 1. GENERAL CONCEPTS, DIRECTION, GUIDANCE, AND DEFINITIONS

Page

CHAPTER 1. HANDBOOK ORGANIZATION, USE, AND REVISION

Section 1. General Handbook Information 1-1
Section 2. Provisions for Revision and Handbook Bulletins 1-9
Section 3. Inspector Use of Handbook Material 1-17
Section 4. Definitions (TBD)* 1-25
Section 5. Acronyms and Abbreviations 1-35

CHAPTER 2. THE FEDERAL AVIATION ADMINISTRATION AND FLIGHT STANDARDS: HISTORY AND ORGANIZATION

Section 1. History and Organization of the Federal Aviation Administration 1-41
Section 2. Title 49, United States Code 1-57

CHAPTER 3. INTERNATIONAL AVIATION

Section 1. The International Civil Aviation Organization 1-65
Section 2. ICAO and the ICAO Annexes 1-68
Section 3. ICAO Regional Plans and Aeronautical Information Publications 1-76

CHAPTER 4. GENERAL DIRECTION, GUIDANCE, AND PROCEDURES

Section 1. Flight Standards Program and the Private Sector (TBD) 1-91
Section 2. Compliance and Enforcement 1-101
Section 3. FAA Regulatory Responsibility and Methodology 1-111
Section 4. Exemptions, Deviations, Waivers, and Authorizations 1-117
Section 5. Custodians of Data Bases 1-129
Section 6. The General Process for Approval or Acceptance 1-139
Section 7. Emergency Actions Involving Air Carrier Operations 1-151

VOLUME 2. AIR OPERATOR CERTIFICATION

CHAPTER 1. GENERAL

Section 1. General Information 2-1
Section 2. Types of Certificates and Applicable Rules 2-24
Section 3. Assignment of Responsibilities for Part 121 and Part 135 Certificates and Certification Projects 2-36
Section 4. Obtaining Certificate Numbers and Certificate Number Construction 2-44

CHAPTER 2. THE CERTIFICATION PROCESS—PART 121 AND PART 135

Section 1. Preapplication Phase 2-53
Section 2. Formal Application Phase 2-73
Section 3. Document Compliance Phase 2-85
Section 4. Demonstration and Inspection Phase 2-91
Section 5. Certification Phase 2-97

*(TBD)=TO BE DEVELOPED

HANDBOOK TABLE OF CONTENTS—Continued

Page

CHAPTER 3. SELECTED PRACTICES

Section 1. Air Carrier Mergers, Bankruptcies, and Acquisition of Air Carrier Operational Assets 2-109
Section 2. Single Pilot, Single Pilot-in-Command (PIC), and Basic FAR Part 135 Operators 2-123
Section 3. Major Changes in Operating Authority 2-139
Section 4. Amendment, Surrender, Suspension, Revocation, and Replacement of Operating Certificates 2-141
Section 5. Hazardous Materials or Dangerous Goods 2-147
Section 6. International Civil Aviation Organization (ICAO) Company Designators and Radiotelephony Designators (Call Signs) 2-157

CHAPTER 4. FOREIGN AIR CARRIERS AND FOREIGN OPERATORS OF U.S.-REGISTERED AIRCRAFT ENGAGED IN COMMON CARRIAGE

Section 1. Background and FAA Authority 2-161
Section 2. Operations Specifications 2-172
Section 3. Compliance, Surveillance, and Enforcement 2-183
Section 4. Leasing Agreements and Interchange Arrangements 2-193
Section 5. Maintenance and Minimum Equipment Lists for U.S.-Registered Aircraft 2-203
Section 6. Special Purpose Flight Crewmember Certificates 2-209
Section 7. Recordkeeping 2-217

VOLUME 3. AIR OPERATOR TECHNICAL ADMINISTRATION

CHAPTER 1. OPERATIONS SPECIFICATIONS

Section 1. Background Information 3-1
Section 2. Automated Operations Specifications 3-13
Section 3. Operations Specifications Part A—General 3-38
Section 4. Part B—En Route Authorizations and Limitations 3-64
Section 5. Part C—Airplane Terminal Instrument Procedures and Airport Authorizations and Limitations 3-85
Section 6. Part H—Helicopter Terminal Instrument Procedures and Airport Authorizations and Limitations 3-105
Section 7. Amendment, Surrender, and Suspension of Operations Specifications 3-123

CHAPTER 2. TRAINING PROGRAMS AND AIRMAN QUALIFICATIONS

Section 1. Scope, Concepts, and Definitions 3-157
Section 2. Training Approval Process 3-175
Section 3. Flightcrew Basic Indoctrination Curriculum Segments 3-203
Section 4. Flightcrew General Emergency Training Curriculum Segments 3-217
Section 5. Flightcrew Aircraft Ground Training Curriculum Segments 3-233
Section 6. Flight Training Curriculum Segments 3-253
Section 7. Flightcrew Qualification Curriculum Segments 3-293
Section 8. Special Curriculum Segments 3-323
Section 9. Differences Training—All Training Categories 3-331
Section 10. Flightcrew Recurrent Training Curriculums 3-343
Section 11. Flightcrew Requalification Training Curriculums 3-353

HANDBOOK TABLE OF CONTENTS—Continued

Page

CHAPTER 3. CHECK AIRMAN, INSTRUCTOR, AND SUPERVISOR PROGRAMS

Section 1. General 3-365
Section 2. Check Airman Approval Process 3-379
Section 3. Check Airman and Air Transportation Flight Instructor Training 3-403

CHAPTER 4. THE ADVANCED QUALIFICATION PROGRAM

Section 1. Distinguishing Features of the Advanced Qualification Program 4-413
Section 2. The Advanced Qualification Program Approval Process 3-431
Section 3. Advanced Qualification Program Airman Certification 3-449
Section 4. Advanced Qualification Program Surveillance 3-461

CHAPTER 5. AIRCRAFT DISPATCHER TRAINING AND QUALIFICATION PROGRAMS

Section 1. Aircraft Dispatcher Training Curriculums 3-525
Section 2. Aircraft Dispatcher Training Approval Process (TBD) 3-537
Section 3. Aircraft Dispatcher Basic Indoctrination Curriculum Segments 3-549
Section 4. Aircraft Dispatcher Initial Equipment and Transition Ground Training Curriculum Segments 3-561
Section 5. Aircraft Dispatcher Qualification Curriculum Segments and Recurrent and Requalification Curriculums 3-573

CHAPTER 6. OPERATIONAL CONTROL

Section 1. General Topics 3-585
Section 2. Flight Dispatch Systems and Domestic Operating Rules 3-603
Section 3. Part 121 Flight Release Systems and Supplemental Operating Rules 3-617
Section 4. Part 121 Flag Operations, Supplemental Operations Outside the Contiguous States, and Extended Overwater Operations 3-629
Section 5. Part 135 Flight-Locating Systems and Operating Rules 3-643

CHAPTER 7. AVIATION WEATHER INFORMATION SYSTEMS

Section 1. General Background Information 3-657
Section 2. Parts 121/135 Weather Information Systems 3-666
Section 3. Sources of Weather Information 3-677
Section 4. Enhanced Weather Information Systems 3-687

CHAPTER 8. AIR CARRIER MANAGEMENT EFFECTIVENESS

Section 1. Scope and Concepts 3-697

CHAPTER 9. PROVING AND VALIDATION TESTS

Section 1. Background 3-717
Section 2. The Proving and Validation Test Process 3-725
Section 3. Proving Test Requirements 3-743
Section 4. Planning the Proving Test 3-751
Section 5. Proving Tests: The Demonstration Phase 3-759
Section 6. Reporting Procedures 3-769
Section 7. Request for Deviation of Proving Flight Hours 3-775
Section 8. Validation Test Requirements 3-783

CHAPTER 10. EMERGENCY EVACUATION AND DITCHING DEMONSTRATIONS

Section 1. General 3-843

HANDBOOK TABLE OF CONTENTS—Continued

Page

Section 2. The Aborted Takeoff Emergency Evacuation Demonstration 3-859
Section 3. Aborted Takeoff Demonstration Procedures 3-868
Section 4. Ditching Demonstrations 3-881
Section 5. Evaluating Evacuation and Ditching Demonstrations 3-888
Section 6. Reporting Evacuation Demonstrations 3-895
Section 7. Maximum Passenger Seating Capacity for Airplanes Used in Part 121 Operations 3-902

CHAPTER 11. OPERATOR RECORDKEEPING

Section 1. General 3-951
Section 2. Acceptance or Approval Process 3-957
Section 3. Currency Periods for Records 3-961
Section 4. Computer-Based Recordkeeping 3-973

CHAPTER 12. ENVIRONMENTAL CONSIDERATIONS AND RESPONSIBILITIES

Section 1. Background Information 3-981
Section 2. Aircraft Noise 3-989
Section 3. Environmental Assessments 3-999

CHAPTER 13. LEASE AND INTERCHANGE AGREEMENTS

Section 1. General 3-1007
Section 2. Dry Lease Agreements 3-1014
Section 3. Wet Lease Agreements 3-1021
Section 4. Interchange Agreements 3-1029

CHAPTER 14. FLIGHT ATTENDANT TRAINING AND QUALIFICATION PROGRAMS

Section 1. Flight Attendant Training Curriculums 3-1037
Section 2. Flight Attendant Training Approval Process 3-1049
Section 3. Flight Attendant Basic Indoctrination Training Curriculum Segment 3-1059
Section 4. Flight Attendant General Emergency Training Curriculum Segment 3-1073
Section 5. Flight Attendant Ground Training Curriculum Segment 3-1105

CHAPTER 15. MANUALS, PROCEDURES, AND CHECKLISTS

Section 1. Background and Definitions 3-2055
Section 2. Approval and Acceptance of Manuals and Checklists 3-2069
Section 3. General Operations Manuals (GOM) 3-2081
Section 4. Flight Manuals 3-2095
Section 5. Aircraft Checklists 3-2109
Section 6. Approval and Acceptance of Flight Attendant Manuals and Checklists 3-2123

VOLUME 4. AIRCRAFT EQUIPMENT AND OPERATIONAL AUTHORIZATIONS

CHAPTER 1. AIR NAVIGATION AND COMMUNICATIONS

Section 1. General Navigation Concepts, Policies, and Guidance 4-1
Section 2. Air Navigation Approval Requirements 4-23
Section 3. Class I Navigation 4-33
Section 4. Class II Navigation 4-43
Section 5. Special Navigation Areas of Operation 4-54
Section 6. General Communications Concepts, Policies, and Guidance 4-81

HANDBOOK TABLE OF CONTENTS—Continued

Page

CHAPTER 2. ALL-WEATHER TERMINAL AREA OPERATIONS

Section 1. Introduction to and Evolution of All-Weather Terminal Area Operations 4-121
Section 2. General Concepts for All-Weather Terminal Area Approach Procedures 4-134
Section 3. Factors Affecting All-Weather Terminal Area Operations 4-145
Section 4. Category I Operations 4-173
Section 5. Category II Operations 4-211
Section 6. Category III Operations 4-241
Section 7. Lower-Than-Standard Takeoff Minimums 4-281
Section 8. MLS, GPS, and Loran-C Systems (TBD) 4-299
Section 9. Authorization for the Use of Special Terminal Instrument Procedures 4-321

CHAPTER 3. AIRPLANE PERFORMANCE AND AIRPORT DATA

Section 1. Airplane Performance Computation Rules 4-331
Section 2. Airplane Performance Rules 4-365
Section 3. Approval of Performance Data Sections of CFM's 4-409
Section 4. Airport Data Acquisition Systems 4-435
Section 5. Selected Practices 4-459

CHAPTER 4. MINIMUM EQUIPMENT LISTS (MEL) AND CONFIGURATION DEVIATION LISTS (CDL)

Section 1. General 4-561
Section 2. Master Minimum Equipment Lists (MMEL) Development and Approval Process 4-577
Section 3. MEL Approval Process 4-589
Section 4. MEL Use in Service 4-609
Section 5. Master Minimum Equipment List Subsystem (MMEL Subsystem) 4-623
Section 6. Configuration Deviation Lists 4-637

CHAPTER 5. AIR AMBULANCE OPERATIONS

Section 1. Background and Definitions 4-759
Section 2. Authorizations for FAR Part 135 Air Ambulance Services 4-775
Section 3. Air Ambulance Service Operational Procedures 4-789
Section 4. Air Ambulance Service Training Programs 4-805

CHAPTER 6. AIRPLANE AUTHORIZATIONS AND LIMITATIONS

Section 1. Selected Practices 4-869

CHAPTER 7. ROTORCRAFT AUTHORIZATIONS AND LIMITATIONS

Section 1. IFR Offshore Operations 4-941
Section 2. Helicopter En Route Descent Areas (HEDA) 4-949
Section 3. Offshore Instrument Approach Procedures 4-961

CHAPTER 8. GROUND DEICING/ANTI-ICING PROGRAMS

Section 1. General 4-1061
Section 2. Approval of FAR Parts 121 and 135 Procedures 4-1091

CHAPTER 9. LOW VISIBILITY TAXI OPERATIONS

Section 1. Background and Responsibilities 4-1141
Section 2. Implementation and Surveillance 4-1153

HANDBOOK TABLE OF CONTENTS—Continued

Page

VOLUME 5. AIRMAN CERTIFICATION AND DESIGNATED EXAMINERS

CHAPTER 1. DIRECTION, GUIDANCE, AND PROCEDURES

Section 1. General Information 5-1
Section 2. Phases of Certification 5-7

CHAPTER 2. AIRLINE TRANSPORT PILOT CERTIFICATES

Section 1. Application Phase—Airplanes and Helicopters 5-37
Section 2. Flight Test Events in Airplanes 5-51
Section 3. Conduct of Flight Tests in Airplane Flight Simulators and Training Devices 5-69
Section 4. Conduct of Flight Tests in an Airplane 5-87
Section 5. Oral and Flight Test Events in Helicopters 5-97
Section 6. Conduct of Flight Tests in a Helicopter 5-113
Section 7. Documentation Phase—All Aircraft 5-121

CHAPTER 3. FLIGHT ENGINEER CERTIFICATE AND CLASS RATINGS

Section 1. Application Phase 5-133
Section 2. Oral and Flight Tests 5-146
Section 3. Documentation Phase 5-161

CHAPTER 4. AIRCRAFT DISPATCHER CERTIFICATES

Section 1. General Information 5-171

CHAPTER 5. AIR TRANSPORTATION DESIGNATED EXAMINERS

Section 1. General 5-195
Section 2. Administration of Designated Examiner Programs 5-215

CHAPTER 6. AIRCREW DESIGNATED EXAMINER (ADE) PROGRAM

Section 1. General 5-241
Section 2. ADE Program Management 5-255
Section 3. Aircrew Program Designees (APD) 5-289

CHAPTER 7. AIRCRAFT NAVIGATOR CERTIFICATES

Section 1. General 5-305

CHAPTER 8. SCHOOL DESIGNATED EXAMINER (SDE) PROGRAM

Section 1. (TBD) 5-319

CHAPTER 9. SELECTED PRACTICES

Section 1. Re-Examination of Airmen Under Section 609 5-441
Section 2. Amendments to Certificates and Replacement of Lost Certificates 5-465
Section 3. Reserved (TBD) 5-485
Section 4. Pilot Logbooks 5-621
Section 5. Detection of Falsified or Altered Airman Certificates 5-633
Section 6. Renewal of Flight Instructor Certificates 5-647
Section 7. Special Medical Flight Tests 5-661
Section 8. U.S. Airman Certificates and Special Purpose Airman Certificates Issued on the Basis of a Foreign Airman Certificate 5-685
Section 9. International Crewmember Certificates 5-707

HANDBOOK TABLE OF CONTENTS—Continued

Page

VOLUME 6. SURVEILLANCE

CHAPTER 1. GENERAL POLICIES AND PROCEDURES

Section 1. General 6-1
Section 2. Reporting on Surveillance 6-15

CHAPTER 2. SPECIFIC TYPES OF INSPECTIONS

Section 1. General Inspection Practices and Procedures 6-127
Section 2. Ramp Inspections 6-137
Section 3. Cabin En Route Inspections 6-149
Section 4. Cockpit En Route Inspections 6-167
Section 5. Operator Trip Records Inspections (PTRS Code 1628) 6-181
Section 6. Manuals Inspections (PTRS Code 1621) 6-199
Section 7. Overwater En Route Inspections (PTRS Code 1624) 6-213
Section 8. Proficiency and Competency Check Inspections (PTRS Code 1632) 6-229
Section 9. Crew and Dispatcher Records Inspections (PTRS Code 1627) 6-249
Section 10. Ground Deicing/Anti-Icing Inspections 6-263
Section 11. Base Inspections (PTRS Code 1616) 6-285
Section 12. Observation of Air Carrier Operations from Air Traffic Control (ATC) Facilities (PTRS Code 1845) 6-299
Section 13. Inspection Procedures During Airline Strikes, Labor Unrest, Financial Stress (PTRS Code 1629) 6-311
Section 14. Reserved (TBD) 6-325
Section 15. Line Check Inspections (PTRS Code 1633) 6-347
Section 16. Part 121 Pilot-In-Command (PIC) Operating Experience Observations (PTRS Codes 1356 and 1631) 6-359
Section 17. Training Program Inspections (PTRS Code 1626) 6-371
Section 18. Operational Control Inspections (PTRS Code 1636) 6-387
Section 19. Station Facilities Inspections (PTRS Code 1635) 6-417
Section 20. Surveillance of the Federal Aviation Administration Flight Program 6-435

VOLUME 7. INVESTIGATIONS

CHAPTER 1. ACCIDENT AND INCIDENT INVESTIGATION AND REPORTING

Section 1. Accident Investigations (PTRS Code 1702 or 1703) 7-1
Section 2. Incident Investigations and Occurrences 7-13

VOLUME 8. GENERAL TECHNICAL FUNCTIONS

CHAPTER 1. WASHINGTON HEADQUARTERS TECHNICAL FUNCTIONS

Section 1. (TBD) 8-1

CHAPTER 2. REGIONAL TECHNICAL FUNCTIONS

Section 1. Regional Flight Procedures Branches 8-25
Section 2. Evaluation Staffs 8-35

CHAPTER 3. TECHNICAL GROUPS, BOARDS, AND NATIONAL RESOURCES

Section 1. Background Information 8-77
Section 2. Aircraft Evaluation Groups (AEG) 8-91

HANDBOOK TABLE OF CONTENTS—Continued

Page

Section 3. Flight Operations Evaluation Boards (FOEB) 8-101
Section 4. Flight Standardization Boards (FSB) 8-111
Section 5. Maintenance Review Boards (MRB) 8-121

VOLUME 9. TECHNICAL STAFF ADMINISTRATION AND RESPONSIBILITIES

CHAPTER 1. INSPECTOR RESPONSIBILITIES, ADMINISTRATION, AND CONDUCT

Section 1. Responsibilities of Aviation Safety Inspectors 9-1
Section 2. Personal Ethics and Conduct 9-23
Section 3. Aviation Safety Inspector (ASI) Credentials 9-45

APPENDIX 1. [TO BE DEVELOPED]

APPENDIX 2. INSPECTOR FEEDBACK

(2 pages) 1

APPENDIX 3. HANDBOOK BULLETINS

(32 pages) 1

APPENDIX 4. AIR TRANSPORTATION FLIGHT STANDARDS INFORMATION BULLETINS

(as maintained on the FAA.MAIL 8400.10 Bulletin Board)

VOLUME 1. TABLE OF CONTENTS

GENERAL CONCEPTS, DIRECTION, GUIDANCE, AND DEFINITIONS

Page

CHAPTER 1. HANDBOOK ORGANIZATION, USE, AND REVISION

Section 1. General Handbook Information

1. Purpose 1-1
3. Distribution 1-1
5. Cancellation 1-1
7. Background 1-1
9. Standardization and Coordination 1-1
11. Appendices 1-2
13. Revisions 1-2
15. Handbook Organization 1-3
17. Directive and Guidance Information 1-3
18.-22. Reserved 1-3

Section 2. Provisions for Revisions and Handbook Bulletins

23. Handbook Revisions 1-9
25. Handbook Bulletins 1-10
26.-30. Reserved 1-10

Section 3. Inspector Use of Handbook Material

31. Handbook Organization 1-17
33. Appendices 1-18
34.-36. Reserved 1-19

Section 4. Definitions (TBD)*

37.-38. Reserved 1-25

Section 5. Acronyms and Abbreviations

39. General 1-35
40. Reserved 1-37

CHAPTER 2. THE FEDERAL AVIATION ADMINISTRATION AND FLIGHT STANDARDS: HISTORY AND ORGANIZATION

Section 1. History and Organization of the Federal Aviation Administration

41. Early Aviation Regulatory Authority and Responsibilities 1-41
43. Establishment of the FAA 1-41
45. Early Organizational Structures of the FAA 1-42
47. Current FAA Organizational Structure (1994) 1-42
49. History of Flight Standards 1-43
51. Current Organization of Flight Standards Service 1-43
53. Flight Standards Service Mission 1-43
55. Functional Organization of Flight Standards Service 1-44
57. Goals of Flight Standards Service 1-45
58.-62. Reserved 1-45

*(TBD)=TO BE DEVELOPED

VOLUME 1. TABLE OF CONTENTS—Continued

Page

Section 2. Title 49, United States Code

63. The Federal Aviation Act of 1958 1-57
65. Evolution of Air Commerce Safety Regulation 1-57
67. Aviation Promotion and Regulation 1-57
69. The National Transportation Safety Board (NTSB) 1-57
71. Transfer of CAB Functions to DOT 1-58
73. Flight Standards Service and Title 49, U.S.C. 1-58
75. Private Sector Responsibilities 1-59
77. Air Carrier Responsibilities for Public Safety 1-59
78.-80. Reserved 1-60

CHAPTER 3. INTERNATIONAL AVIATION

Section 1. The International Civil Aviation Organization

81. General 1-65
83. The Chicago Convention 1-65
85. United States Participation 1-65
86.-88. Reserved 1-65

Section 2. ICAO and the ICAO Annexes

89. ICAO Objectives 1-68
91. Obligations of Member States 1-68
93. Organizational Structure 1-69
95. ICAO Publications 1-69
97. Annexes to the Convention 1-70
98.-110. Reserved 1-71

Section 3. ICAO Regional Plans and Aeronautical Information Publications

111. Regional Planning 1-76
113. Air Navigation Plans 1-76
115. Aeronautical Information Publications (AIP) 1-76
116.-120. Reserved 1-76

CHAPTER 4. GENERAL DIRECTION, GUIDANCE, AND PROCEDURES

Section 1. Flight Standards Program and the Private Sector (TBD)

121.-128. Reserved 1-91

Section 2. Compliance and Enforcement

129. General 1-101
131. Air Carrier Voluntary Disclosure of Violations 1-101
133. Deviations Resulting from Emergencies 1-104
135. Violations That Involve Multiple Crewmembers 1-105
137. System-Wide Violations 1-105
138. Compliance with Smoking Regulations for In-Flight Operations 1-105
139. POI Notification and Action 1-107
140. Reserved 1-108

Section 3. FAA Regulatory Responsibility and Methodology

141. General 1-111
143. Regulatory Procedures 1-111
145. FAA Responsibilities 1-111
147. Public Responsibilities and Rights 1-111

VOLUME 1. TABLE OF CONTENTS—Continued

		Page
149.	Processing Proposed Rules	1-111
150.-154.	Reserved	1-112
Section 4.	Exemptions, Deviations, Waivers, and Authorizations	
155.	Exemptions	1-117
157.	Content of Petition	1-117
159.	Preparation and Mailing of Petition	1-117
161.	Processing the Petition	1-117
163.	Distribution and Availability of Exemptions	1-117
165.	Amendment of Operations Specifications	1-117
167.	Petition for Reconsideration	1-117
169.	Processing a Petition for Reconsideration	1-118
171.	Deviations, Waivers, and Authorizations	1-118
173.	Waivers and Authorizations	1-118
175.	Deviations	1-119
177.	Deviations for Military Contract Operations	1-119
179.	Deviation to Perform an Emergency Operation	1-119
181.	Use of FAA Form 8430-6, "Admission to Flight Deck"	1-120
183.	Admission to Flight Deck Without Seat in Cabin—FAR § 121.547	1-120
184.	Reserved	1-121
Section 5.	Custodians of Data Bases	
185.	Purpose	1-129
187.	Location of Data Bases	1-129
189.	Accessing Data Bases	1-129
191.	Requests for Information Under the "Freedom of Information Act" (FOIA)	1-129
192.-204.	Reserved	1-129
Section 6.	The General Process for Approval or Acceptance	
205.	General	1-139
207.	Phase One	1-139
209.	Phase Two	1-140
211.	Phase Three	1-140
213.	Phase Four	1-141
215.	Phase Five	1-142
217.	Summary of Process	1-142
218.-222.	Reserved	1-142
Section 7.	Emergency Actions Involving Air Carrier Operations	
223.	General	1-151
225.	Notification Procedures	1-151
227.	Additional Guidance	1-151
228.-238.	Reserved	1-151

VOLUME 1. GENERAL CONCEPTS, DIRECTION, GUIDANCE, AND DEFINITIONS

CHAPTER 1. HANDBOOK ORGANIZATION, USE, AND REVISION

SECTION 1. GENERAL HANDBOOK INFORMATION

1. PURPOSE. This order is referred to as a handbook and directs the activities of operations aviation safety inspectors (ASI) who are responsible for the certification, technical administration, and surveillance of air carriers and certain other air operators who conduct their operations in accordance with Parts 121 and 135 of the Federal Aviation Regulations (FAR). It also contains regional and district office requirements for the support of ASI's responsible for those activities.

3. DISTRIBUTION. The handbook is distributed to FAA personnel through normal FAA publication distribution procedures. Any problems with distribution should be addressed to the regional distribution officer. This order is distributed to all addressees on special distribution list ZFS-840.

5. CANCELLATION. When Change 7 was published, Order 8400.10 was fully implemented, and the following orders were cancelled:

- Order 8430.1D,"Air Carrier Operations Inspector's Handbook - Part 135," dated August 17, 1984
- Order 8430.6C, "Air Carrier Operations Inspector's Handbook," dated July 2, 1984

7. BACKGROUND. This handbook has been designed to serve as a multipurpose document that will meet the needs of new inspectors entering the Federal Aviation Administration's (FAA) Flight Standards workforce, as well as those with many years of experience. Historical information regarding the FAA's evolvement and the latest material available covering current, state-of-the-art aircraft and equipment has been included. A wide variety of information, currently found in many separate documents, has been compiled to make this handbook as comprehensive as possible. When completed, the handbook will consist of nine volumes encompassing subjects from general concepts, direction, guidance, and procedures to very detailed explanations of such programs as automated operations specifications, air navigation, all-weather terminal operations, and training programs.

9. STANDARDIZATION AND COORDINATION. A major objective of Flight Standards Service is to standardize the functions of the ASI position. For this reason, any change to this handbook must be preceded by formal coordination between all Flight Standards divisions. The Technical Standards staff of the Air Transportation Division (AFS-200) is responsible for circulating draft material and for coordinating the reconciliation process.

A. Regional Handbook Coordinators. Each regional office manager shall designate a regional specialist to serve as the regional handbook coordinator. The regional handbook coordinator shall serve as an advisor to the regional division manager on the content of the handbook and represent the division manager in discussions with AFS-200 and the other regional handbook coordinators on the content of each proposed change. The regional handbook coordinator shall also act as an expert on the content of the handbook for the Flight Standards District Offices (FSDO).

B. Direction and Guidance. The direction and guidance in this handbook has been written using a "middle of the road" approach. A deliberate effort has been made to provide sufficient direction and guidance to standardize the job functions of the ASI position without unnecessarily restricting the initiative of individual inspectors and managers. Should inspectors, supervisors, and managers find the direction and guidance of the handbook too restrictive or inappropriate for a specific case, a request should be made for permission to deviate from the guidance of the handbook. Such requests should be forwarded through the applicable Flight Standards division to AFS-500. When AFS-500 agrees to a deviation, the guidance in the handbook will be reviewed for possible revision.

C. Authority to Change This Document. The Director, Flight Standards Service (AFS-1) must approve all changes to this order and its appendixes. Any proposed change must be approved by AFS-1.

All proposed changes to this manual should be addressed to Manager, Handbook Staff, AFS-200 HB.

D. Conflicts With Other FAA Orders. The guidance in this handbook may be found to be in conflict with that in other FAA orders and directives. This situation may arise inadvertently or because it is impractical to revise all orders simultaneously. In such a case, the order with the most recent date should normally be used. Should the guidance in this order conflict with an FAR, the FAR takes precedence. Inspectors should refer questions about such conflicts to their immediate supervisors. Supervisors and managers may contact AFS-200 through the regional office handbook coordinator to resolve such questions.

E. WITHDRAWN—CHG 10.

F. Availability of Aviation Safety Inspector Handbooks and Bulletins. This handbook is available to both FAA personnel and to individuals outside the FAA. Flight Standards inspectors should advise operators of the availability of handbooks. This information is intended to be disseminated by inspectors, upon request, to certificated airmen, air agencies, and other interested persons who may wish to purchase or update handbooks.

(1) Published Documents. FAA order numbers, titles, and stock numbers of the handbooks are as follows:

(a) Order 8300.10, "Airworthiness Inspector's Handbook":

- Consolidated reprint (includes Changes 1 through 5) - S/N 050-007-00922-4
- Change 6 - S/N 050-007-00955-1
- Change 7 - S/N 050-007-00958-5
- Change 8 - S/N 050-007-00966-6
- Change 9 - S/N 050-007-01011-7

(b) Order 8400.10, "Air Transportation Operations Inspector's Handbook":

- Consolidated reprint (includes Changes 1 through 8) - S/N 050-007-01066-4
- Change 9 - S/N 050-007-01068-1

(c) Order 8700.1, "General Aviation Operations Inspector's Handbook":

- Consolidated reprint (includes Changes 1 through 7) - S/N 050-007-00921-6
- Change 8 - S/N 050-007-00977-1
- Change 9 - S/N 050-007-00997-6
- Change 10 - S/N 050-007-01041-9

(d) Current prices and latest change data are available through the Government Printing Office (GPO).

(e) Interested parties may order handbooks and changes from the following address:

Superintendent of Documents
P.O. Box 371954
Pittsburgh, PA 15250-7954

(f) Make check or money order payable to the Superintendent of Documents and specify the FAA order number, title, stock number, and price.

(g) Orders may also be charged to MasterCard or VISA credit cards by telephoning the GPO order desk at (202) 512-1800 between 8:00 a.m. and 4:00 p.m. eastern time, Monday through Friday (except holidays). In addition, orders may be placed at domestic GPO bookstores.

(2) Handbook Bulletins and Flight Standards Information Bulletins (FSIB). Principal operations inspectors (POI) should inform their operators of the newly published handbook bulletins, which are available to the public on the Flight Standards Bulletin Board System (BBS). The BBS can be accessed by calling (202) 267-5231. The protocol is 1200, 2400, 9600 or 14,400 baud,8,1,N. These bulletins can also be accessed on the "8400.10" Bulletin Board in FAA.MAIL.

11. APPENDICES. As this material is reviewed during the development of the handbook, it will either be updated and included in the appropriate chapters, or canceled if no longer pertinent. When this process is complete, Order 8430.17 will be canceled. Appendix 1 is in the development phase and will be designed as a comprehensive cross-reference index that will identify major subjects to help locate specific information in the handbook. Appendix 2 contains a newly developed inspector feedback sheet. Appendix 3 is comprised of handbook bulletins (see section 2, paragraph 25; and section 3, paragraph 33C; for more information. Appendix 4 is comprised of Flight Standards information bulletins (FSIB), which include information that is temporary in nature.

13. REVISIONS. During the development of this handbook, individual chapters and sections will be published as they are completed and will become effective upon receipt. Incomplete chapters and sections will be identified for future development by the letters "TBD" (to be developed). After the entire document has been published, it will be kept current by revisions as changing situations warrant or new policy is established.

15. HANDBOOK ORGANIZATION.

A. A primary objective of the personnel developing this handbook is to make it as comprehensive as possible, and easy to use. It is numbered sequentially by volumes, with each volume containing chapters and sections. Paragraphs in each volume are consecutive odd numbers. Even numbers have been reserved for expansion. Pages are numbered within each volume and are so identified (for example, page 25 of volume 3 is shown as 3-25).

B. Where material is only referenced by paragraph number, it can be assumed that the referenced paragraph is within the same volume. If reference is made to material in another volume, it will be identified by volume number, chapter, and section or paragraph number.

C. Figures and tables have been kept as close to the pertinent text as possible. Where they are lengthy, they have been placed at the back of the section so as not to create large breaks in the textual material. Figures and tables will be identified numerically by volume, chapter, section, and the figure or table number. For example, the first table in volume 1, chapter 2, section 3, will be identified as table 1.2.3.1., and the second table will be table 1.2.3.2.

17. DIRECTIVE AND GUIDANCE INFORMATION.

A. Directive information is information that is considered directive in nature and will contain terms such as "shall," or "must," and means the actions are mandatory. "Shall not" means the action is prohibited. The use of these terms will leave no flexibility, and their direction shall be followed unless otherwise authorized by Headquarters.

B. Guidance information is information considered guiding in nature and will contain terms such as "will," "should," or "may." These terms indicate actions that are desirable, permissive, or not mandatory, and allow flexibility.

18.–22. RESERVED.

[PAGES 1-4 THROUGH 1-8 RESERVED]

CHAPTER 1. HANDBOOK ORGANIZATION, USE, AND REVISION

SECTION 5. ACRONYMS AND ABBREVIATIONS

39. GENERAL. Many acronyms and abbreviations for both old as well as new aviation terms are used throughout this handbook. Inspectors can refer to the following alphabetical listing of frequently used acronyms and abbreviations and their meanings when using this handbook.

AC	Advisory Circular
ACARS	Air-Ground Passive Communications Systems
ACO	Aircraft Certification Office
ADE	Air Carrier Designated Examiner
ADF	Automatic Direction Finder
ADR	Advisory Route
AEG	Aircraft Evaluation Group
AES	Automated Exemption System
A/FD	Airport/Facility Directory
AFM	Airplane Flight Manual
AFS-1	Director of Flight Standards Service
AFSS	Automated Flight Service Station
AFTN	Aeronautical Fixed Telecommunications Network
AGC	Office of the Chief Counsel
AGL	Above Ground Level
AH	Alert Height for Category III Operations
AIA	Office of International Aviation
AIM	Airman's Information Manual
AIP	Aeronautical Information Publication
AIRMET	Airman's Meteorological Information
ALPA	Air Line Pilots Association Intl.
AOPA	Aircraft Owners and Pilots Association
APD	Aircrew Program Designee
APM	Aircrew Program Manager
APU	Auxiliary Power Unit
AQP	Advanced Qualification Program
AR	Airborne Radar
ARA	Airborne Radar Approach
ASAS	Aviation Safety Analysis System (Data Automation)
ASDE	Airport Surface Detection Equipment
ASI	Aviation Safety Inspector
ASR	Airport Surveillance Radar
ATA	Air Transport Association of America
ATC	Air Traffic Control
ATD	Advanced Training Device
ATIS	Automatic Terminal Information Service
ATP	Airline Transport Pilot
AVN	Aviation Standards National Field Office
AVR-1	Associate Administrator for Regulation and Certification
AVS-1	Associate Administrator for Aviation Standards
AVSIG	Aviation Forum
AWOS	Automated Weather Observing System
AWTA	All Weather Terminal Area Operation
AXR-1	Executive Director for Standards and Compliance
BBS	Bulletin Board Service
CAA	Civil Aeronautics Administration
CAB	Civil Aeronautics Board
CAM	Civil Aviation Manual
CAR	Civil Aviation Regulation
CASFO	Civil Aviation Security Field Office
CBI	Computer-Based Instruction
CCO	Cockpit-Cutoff-Angle
CDL	Configuration Deviation List
CEPAC	Central East Pacific (Airspace)
CFI	Certificated Flight Instructor
CFM	Company Flight Manual
CFR	Code of Federal Regulations
CG	Center of Gravity
CHDO	Certificate-Holding District Office
CIG	Component Inoperative Guide
CMO	Certificate Management Office
CPM	Certification Project Manager
CRM	Crew Resource Management
CVFP	Charted Visual Flight Procedures
DA	Density Altitude
DBA	Doing Business As
DH	Decision Height
DME	Distance Measuring Equipment
DNL	Decibel Noise Level
DOT	Department of Transportation
DPA	Decision Point Altitude
DR	Dead Reckoning
DUAT	Direct User Access Terminal
DWFAF	Downwind Final Approach Position
EA	Environmental Assessment
EPR	Exhaust Pressure Ratio
ER-OPS	Extended-Range Operations
ETA	Estimated Time of Arrival
ETE	Estimated Time En Route
ETOPS	Extended-Range Operations with Two-Engine Airplanes

F/A	Flight Attendant
FA	Forecasts Area
FAA	Federal Aviation Administration
FA Act	Federal Aviation Act of 1958
FAF	Final Approach Fix
FAR	Federal Aviation Regulations
FBO	Fixed-Base Operator
FD	Flight Director
FE	Flight Engineer
FIFO	Flight Inspection Field Office
FIR	Flight Information Region
FL	Flight Level
FMRB	Flight Manual Review Board
FMS	Flight Management System
FOD	Foreign Object Damage
FOEB	Flight Operations Evaluation Board
FOIA	Freedom of Information Act
FONSI	Finding Of No Significant Impact
FOPM	Flight Operations Policy Manual
FSAS	Flight Standards Automation System
FSB	Flight Standardization Board
FSDO	Flight Standards District Office
FSIS	Flight Standards Information System
FSNFO	Flight Standards National Field Office
FSS	Flight Service Station
FT	Forecast Terminal
FTD	Flight Training Device
GMM	General Maintenance Manual
GNSS	Global Navigation Satellite System
GOM	General Operations Manual
GPS	Global Positioning System
GS	Groundspeed
GS GC	Ground School Graduation Certificate
GTD	Ground Training Device
HAA	Height Above Airport (Non-precision approach)
HAT	Height Above Touchdown (Precision approach)
HAZMAT	Hazardous Materials
HEDA	Helicopter En Route Descent Area
HF	High Frequency
HIRL	High Intensity Runway Light
HMR	Hazardous Materials Regulation
HUD	Heads-Up Display
IAP	Instrument Approach Procedure
IAS	Indicated Airspeed
IATA	International Airport Transport Association
IAW	In Accordance With
ICAO	International Civil Aviation Organization
IF	Intermediate Approach Fix
IFO	International Field Office
IFR	Instrument Flight Rules
ILS	Instrument Landing System
IM	Inner Marker
IMC	Instrument Meteorological Conditions
IMLS	Instrument Microwave Landing System
INM	Integrated Noise Model
INS	Inertial Navigation System
IOE	Initial Operating Experience
IRA	Instrument Rating Airplane
IRS	Inertial Reference System
ISARP	International Standards and Recommended Practice
JAD	Job Aid Disk
JTA	Job Task Analysis
KM	Kilometer
LAN	Local Area Network
LDA	Localizer-Type Directional Aid
LF	Low Frequency
LIRL	Low Intensity Runway Light
LLWS	Low-Level Windshear
LOA	Letter of Authorization
LOE	Line-Operational Evaluation
LOFT	Line-Oriented Flight Training
LOP	Line of Position
LORAN	Long-Range Navigation
LOS	Line-Operational Simulation
LRA	Lowest Radar Altitude
MAP	Missed Approach Point
MCT	Maximum Continuous Thrust
MDA	Minimum Descent Altitude (non-precision approach)
MDPR	Master Differences Program Requirement
MEL	Minimum Equipment List
MF	Medium Frequency
MHz	Megahertz
MID	Mid Runway Rollout
MIRL	Medium Intensity Runway Light
MLS	Microwave Landing System
MNPS	Minimum Navigation Performance Specification
MOU	Memorandum of Understanding
MRB	Maintenance Review Board
MSG	Maintenance Steering Group
MSL	Mean Sea Level
MTOW	Maximum Takeoff Weight
NAS	National Airspace System
NASA	National Aeronautics and Space Administration
NAT	North Atlantic Track
NATA	National Air Transportation Association
NAVAID	Navigational Aid
NDB	Nondirectional Beacon
NFDC	National Flight Data Center
NFDD	National Flight Data Digest
NM	Nautical Mile
NOAA	National Oceanic and Atmospheric Administration
NOPAC	North Pacific
NOS	National Ocean Service
NOTAM	Notice to Airmen

NPRM	Notice of Proposed Rule-Making
NSPM	National Simulator Program Manager
NST	National Standardization Team
NTSB	National Transportation Safety Board
NWS	National Weather Service
OAT	Outside Air Temperature
OC	Obstruction Chart
OCA	Obstacle Clearance Altitude
OCH	Obstacle Clearance Height
OCL	Obstacle Clearance Limit
OE	Operating Experience
OPSS	Operations Specifications Subsystem
OSAP	Offshore Standard Approach Procedure
PAI	Principal Avionics Inspector
PANS-OPS	Procedures for Air Navigation Services Aircraft Operations
PAR	Precision Approach Radar
PASI	Preapplication Statement of Intent
PASS	Professional Airways Systems Specialists
PATCO	Professional Air Traffic Controllers Organization
PATWAS	Pilots Automatic Telephone Weather Answering Service
PCB	Production Certification Board
PIC	Pilot-in-Command
PIREP	Pilot Weather Report
PF	Pilot-Flying
PMI	Principal Maintenance Inspector
PNF	Pilot-Not-Flying
POI	Principal Operations Inspector
POM	Pilot Operating Manual
PPM	Partial Program Manager
PTRS	Program Tracking and Reporting Subsystem
PTS	Practical Test Standards
RAA	Regional Airline Association
RFM	Rotorcraft Flight Manual
RFSD	Regional Flight Standards Division
RMA	Radar Minimum Altitude
RNAV	Area Navigation System
RTCA	Radio Technical Commission for Aeronautics
RVO	Runway Visibility by Observer
RVR	Runway Visual Range
RVV	Runway Visibility Value
SAFE	Aviation Safety Analysis and Functional Evaluation
SARA	Special Airport/Route Authorization
SAWRS	Supplementary Aviation Weather Reporting Station
SFAR	Special Federal Aviation Regulations
SIAP	Standard Instrument Approach Procedure
SIC	Second-in-Command
SID	Standard Instrument Departure
SIGMET	Significant Meteorological Information
SIM	Flight Simulator
SM	Statute Mile
SOE	Supervised Operating Experience
SPO	Supporting Proficiency Objectives
SPOT	Special Purpose Operational Training
STAR	Standard Terminal Arrival
STC	Supplemental Type Certificate
STOL	Short Takeoff and Landing
SVT	Single-Visit Training
SYSOP	Systems Operator
TACAN	Tactical Air Navigational Aid
TAS	True Airspeed
TBD	To Be Developed
TCAS	Traffic Alert and Collision Avoidance System
TCH	Threshold Crossing Height
TCO	Training Course Outline
TCPM	Training Center Program Manager
TDZ	Touchdown Zone
TERPS	Terminal Instrument Procedures
TPO	Terminal Proficiency Objectives
TSO	Technical Standard Order
TWEB	Transcribed Weather Broadcast
UHF	Ultra High Frequency
UNICOM	Aeronautical Advisory Station
USC	United States Code
USNOF	United States NOTAM Office
UTC	Coordinated Universal Time
VASI	Visual Approach Slope Indicator
VERTOL	Vertical Takeoff and Landing
VFR	Visual Flight Rules
VHF	Very High Frequency
VIS	Vital Information Subsystem
VLF	Very Low Frequency
VMC	Visual Meteorological Conditions
VOR	VHF Omnidirectional Range Station
VOR/DME	VHF Omnidirectional Range Station/Distance Measuring Equipment
VORTAC	VHF Omnidirectional Range Station/ Tactical Air Navigation
VSI	Vertical Speed Indicator
WPMS	Work Program Management System

40. RESERVED.

[PAGES 1-38 THROUGH 1-40 RESERVED]

CHAPTER 2. THE FEDERAL AVIATION ADMINISTRATION AND FLIGHT STANDARDS: HISTORY AND ORGANIZATION

SECTION 1. HISTORY AND ORGANIZATION OF THE FEDERAL AVIATION ADMINISTRATION

41. EARLY AVIATION REGULATORY AUTHORITY AND RESPONSIBILITIES.

A. The need for an aviation regulatory authority was recognized in the early 1920's; however, the numerous bills introduced to the United States Congress attempting to establish it were unsuccessful. It was not until the Air Mail Act was enacted in early 1925 that the American air carrier industry began and the need for an aviation regulatory authority became imperative. As a result of this act, the Post Office Department began to give air mail contracts to newly formed air carriers financed by individuals such as William A. Rockefeller and Henry Ford. The air carrier industry activity that began that year was minimal, yet this activity, along with requests from industry for federal aviation safety regulations, prompted legislative proposals for an Air Commerce Act.

B. The Air Commerce Act was enacted in 1926. This act commissioned the Secretary of the Department of Commerce to be responsible for fostering air commerce, issuing and enforcing air traffic rules, certifying pilots and aircraft, and operating and maintaining air navigation aids (NAVAID). In 1936, the Department of Commerce became responsible for controlling en route air traffic, which soon became its most demanding civil aviation responsibility.

C. By 1937, the air carrier industry had expanded so rapidly that the functional responsibilities for aviation activity within the Department of Commerce had become fragmented. For example, airway beacons had become the responsibility of the Department of Lighthouses while aviation maps had become the responsibility of the Coast and Geodetic Survey organization. This fragmentation and the lack of formal procedures for establishing aviation regulations resulted in numerous Presidential Executive Orders pertaining to air carrier issues. In an attempt to deal with this problem, the Bureau of Air Commerce published a biweekly magazine entitled, "Air Commerce Bulletin," to disseminate information about aviation operations and regulations.

D. The inadequacy of the Air Commerce Bulletins led to the passage of the Federal Register Act in 1937. The Federal Register Act made it mandatory that all federal regulations be codified into a Code of Federal Regulations.

E. In 1938, as a result of a need to modify the Air Commerce Act and a disastrous air safety record in the preceding years, the Civil Aeronautics Act was enacted. The Bureau of Air Commerce was replaced by the newly formed Civil Aeronautics Authority (CAA). The CAA was given the additional authority to issue air carrier route certificates and to regulate airline fares. In 1940, the CAA was divided into the Civil Aeronautics Board (CAB) and the CAA. The CAB was established as an independent agency and was given the authority and responsibility for economic and safety rulemaking and for accident investigations. The CAA was reassigned to the Department of Commerce and was given the responsibility for air traffic control, airman and aircraft certification, safety enforcement, and airway development. In 1946, the CAA was also given the responsibility to oversee a federal-aid airport program.

43. ESTABLISHMENT OF THE FAA.

A. After World War II, from 1945 to 1958, the rapid growth of air commerce, aviation technology, and an increasing public demand for air services caused the aviation industry to reach unforeseen levels of complexity. Under the Department of Commerce, the CAA could not efficiently or adequately fulfill its responsibilities because of drastic reductions in federal spending and appropriations for aviation functions. For example, in 1954, only half of the scheduled very high frequency omnidirectional radio range (VOR) and distance measuring equipment (DME) facilities had been commissioned. Long-range radar systems were delayed until 1956. This situation, coupled with several major, midair collisions in 1956 and 1957, raised public concern about aviation safety issues and led to the enactment of the Federal Aviation Act (FA Act) in 1958.

B. The FA Act transformed the CAA into an independent agency and renamed it the Federal Aviation Agency (FAA). The FAA was given, in addition to all former CAA responsibilities, sole responsibility for developing and maintaining a common civil/military system of air navigation and air traffic control, and the safety and rulemaking functions of the CAB.

C. In 1967, Congress placed the Federal Aviation Agency in the newly created Department of Transportation (DOT) and renamed it the Federal Aviation Administration (FAA). This action was based on the belief of Congress, the executive branch, and the transportation industry that integrated and balanced transportation systems were necessary to meet the nation's transportation needs. It was also believed that the nation's transportation systems could be managed better by a single department. Congress subsequently amended the FA Act, enlarging the FAA role in aviation security, aircraft noise abatement, and airport certification. An Airport and Airway Development Act authorized the FAA Administrator to establish minimum safety standards for airports and to issue operating certificates to air carrier airports meeting those standards. On July 5, 1994, the FA Act was rescinded and recodified into Title 49, United States Code (U.S.C.). As the handbook undergoes revision, all references to the FA Act will be changed to reflect the appropriate section of Title 49, U.S.C.

45. EARLY ORGANIZATIONAL STRUCTURES OF THE FAA.

A. In 1927, the Department of Commerce employed 234 persons working in the Air Regulations Division and the Air Information Division. When the CAA was created, it was administered by five appointed officials with authority to regulate civil aviation. The Air Safety Board, an associated agency, was responsible for investigating accidents, determining probable cause of each accident, and making recommendations for accident prevention. From 1938 through 1958, the number of CAA employees grew from 2,900 to 25,800. In 1958, six domestic regions, one international region, the Aeronautical Center, and a Technical Development and Evaluation Center (FAA Technical Center), were directly responsible to the CAA Administrator. Within the CAA headquarters a major operational office was directed by the Assistant Administrator for Operations. A subordinate office to the Assistant Administrator for Operations was called the Office of Aviation Safety. The Office of Aviation Safety was the predecessor of the Bureau of Flight Standards. Other subordinate offices reporting to the Assistant Administrator for Operations were the Office of Federal Airways, the Office of Airports, and Washington National Airport.

B. The first year of the newly formed independent Federal Aviation Agency was 1959. The FAA Washington headquarters organizational structure was as follows:

(1) Three staff level Assistant Administrators:

- Management Services
- Plans and Requirements
- Personnel and Training

(2) Five specialized offices:

- General Counsel
- Civil Air Surgeon
- Congressional Liaison
- Public Affairs
- International Coordination

(3) Five operational bureaus:

- Research and Development (included the FAA Technical Center)
- Flight Standards
- Facilities and Material
- Air Traffic Management
- National Capital Airports

C. In 1959, the FAA regional organizational structure included six domestic regions, one international region, and the Aeronautical Center. Three years later (1961) the FAA set up a "straightline" structure which provided the five operational bureaus (see subparagraph 45B(3)) with tighter control of field operations. In 1962, these operational bureaus were transformed into staff services and the number of regions increased from five to seven domestic regions (Eastern, Southern, Southwestern, Central, Western, Alaskan, and Hawaiian) which reported directly to the FAA Administrator. The number of regions increased to nine in 1971 with the addition of the Great Lakes Region and the New England Region. Ten years later (1981) the Western and Hawaiian regions were reorganized into the Western-Pacific Region and the Northwest Mountain Region.

47. CURRENT FAA ORGANIZATIONAL STRUCTURE (1994). The FAA currently consists of approximately 48,000 employees. In the 1988 reorganization, certain areas of functional responsibility were centralized because it was believed that a higher degree of standardization and control would be beneficial. Other areas of functional responsibility remained decentralized when it was apparent that efficiency would be enhanced by such an organizational

structure. At Washington headquarters, in addition to the specialized offices that perform staff functions for the FAA Administrator, three Executive Directors who report directly to the Administrator were established. Eight Associate Administrators are also based at Washington headquarters. The Associate Administrators report directly to their respective Executive Directors who are responsible for the development of national policy, regulations, methods, and other headquarters functions of the FAA. There are nine domestic regional offices and the Aeronautical Center whose administrators report directly to the Executive Director for System Operations (AXO-1). The Flight Standards Service reports to the Associate Administrator for Regulation and Certification (AVR-1), which is one of three Associate Administrators that report to AXO-1. Regional Flight Standards Division (RFSD) managers based at regional headquarters report directly to the Director of Flight Standards Service (AFS-1) and are responsible for managing and executing the daily operational programs of the Flight Standards Service through a system of district offices. The Flight Standards division managers within the regions serve as the focal point for all Flight Standards activities within their respective regions. These division managers serve as consultants to the regional administrators on behalf of AFS-1.

49. HISTORY OF FLIGHT STANDARDS. When the FAA was created in 1958, the Bureau of Flight Standards was established as one of five operating bureaus within the FAA. This bureau had the responsibility for most of the safety functions of the earlier Office of Aviation Safety at the Department of Commerce. In 1967, the name "Bureau of Flight Standards" was changed to Flight Standards Service. The director of this service reported directly to the FAA Administrator. The Flight Standards Service was later assigned as one of several offices within the Office of Associate Administrator for Aviation Standards which had been established in January 1979. In July of 1979, three new offices, Flight Operations, Airworthiness, and Aviation Safety, absorbed the safety functions previously assigned to the Flight Standards Service. Most headquarters Flight Standards functions were performed by the Office of Flight Operations and the maintenance division of the Office of Airworthiness. In November 1984, the Office of Aviation Safety was reassigned as a staff office reporting directly to the Office of the Administrator. In November 1986, the Office of Flight Standards was created at FAA headquarters by combining the Office of Flight Operations and the maintenance division from the Office of Airworthiness. With this change, Flight Standards safety responsibilities were aligned at the three Flight Standards organizational levels (headquarters, regional, and district offices). In 1988, the Office of Flight Standards was redesignated as the Flight Standards Service.

51. CURRENT ORGANIZATION OF FLIGHT STANDARDS SERVICE.

A. Headquarters Organization. The Flight Standards Service (AFS), the Aircraft Certification Service (AIR), and the Office of Rulemaking (ARM) report to the Associate Administrator for Regulation and Certification (AVR) (see figure 1.2.1.1.). The Flight Standards Service consists of six divisions that report to the Director, AFS-1: the Air Transportation Division (AFS-200), the Aircraft Maintenance Division (AFS-300), the Technical Programs Division (AFS-400), the Flight Standards National Field Office (AFS-500), the Regulatory Support Division (AFS-600), and the General Aviation and Commercial Division (AFS-800). See figure 1.2.1.2. for the general responsibilities of each of these divisions.

B. Regional Organization. The regional headquarters are organized into special staffs and operating divisions similar to those at Washington headquarters. One of the regional divisions is the Flight Standards Division, commonly referred to as the "200 Division." Flight Standards District Offices (FSDO), through office managers, report directly to RFSD managers. RFSD's and FSDO's are responsible for accomplishing special regional programs as well as the national policies and programs developed by AFS-1 (based at Washington headquarters). RFSD managers report directly to AFS-1 (see figure 1.2.1.2.).

53. FLIGHT STANDARDS SERVICE MISSION.

A. The Flight Standards Service is responsible for the certification and regulation of the users of the National Airspace System (NAS). Specifically, the Flight Standards Service mission is stated as follows:

> *To provide the public with accident-free aircraft operations through the highest standards in the world.*

B. The Flight Standards Service is specifically responsible for the following:

- Certification, operating methods, flight operations, and maintenance activities of U.S. air carriers and foreign air carriers operating in and over the U.S.
- Maintenance standards for U.S.-registered aircraft (including continued airworthiness)
- Certification and conduct of commercial, industrial, private, and general aviation operations

- Examination and certification (except medical) of airmen
- Examination and appointment of persons designated and authorized to act as representatives of the FAA Administrator with respect to the certification of airmen and the maintenance of civil aircraft and products
- Use of air navigation facilities and appliances and systems used in civil aircraft; the minimum equipment capability of civil aircraft for operating in the NAS and other established environments; and the operational aspects of flight procedures including en route and instrument approach procedures (except air traffic control)
- Approval of, and surveillance over, the aircraft maintenance programs of operators and pilot schools
- Assurance that appropriate operational considerations are accommodated with regard to aircraft maintenance policies, procedures, and practices
- Establishing operating requirements and criteria for the use of aircraft systems
- Assurance that appropriate policies and practices and other operational considerations are accounted for in the operating limitations and information requirements, in the development of airplane and rotorcraft flight manuals
- Recommending quantities, priorities, and locations for approach and landing NAVAID's and visual aids for the National Airspace System Plan
- Issuance, amendment, and termination of rules and regulations promulgated under Subtitle VII, Subpart A, "Air Commerce and Safety," of Title 49, U.S.C. (formerly the FA Act) that are within the purview of Flight Standards
- Issuance, amendment, and termination of standard instrument approach procedures (SIAP), minimum en route altitudes, flight procedures, operational weather minimums, and minimum equipment requirements
- Granting or denying exemptions from regulations and taking final action on any request or petition for reconsideration

55. FUNCTIONAL ORGANIZATION OF FLIGHT STANDARDS SERVICE.

A. The Flight Standards Service programs are carried out nationwide by a workforce of approximately 3,000 aviation safety inspectors (ASI) and support personnel. The functions of the Flight Standards Service are managed and executed at Washington headquarters through the Office of the Director (AFS-1), six staff elements, three policy divisions, one technical programs division and one national field office; and at one regulatory support division in Oklahoma City, Oklahoma. There are nine regional divisions with 94 FSDO's and satellite offices located throughout the U.S. and its territories. The Flight Standards Service also maintains International Field Offices (IFO) outside the U.S. at Brussels, Belgium; London, United Kingdom; Frankfurt, Germany; and in Singapore. Offices in Europe report to the Eastern Region's Flight Standards Division manager. The Singapore office reports to the Western-Pacific Flight Standards Division manager.

B. The Office of AFS-1 consists of five subordinate staff organizations in addition to the Director's and Deputy Director's administrative staff: Executive staff, Evaluation and Analysis staff, International Liaison staff, Automation Resource Management staff, and Aircraft Evaluation Program staff. They each serve as an extension of the Director and assist the Director in carrying out management functions for accomplishing the Flight Standards Service mission. The Executive staff provides support to the Director for service-wide management activities. It also is responsible for ensuring that Flight Standards Service resource requirements such as people, automation, and facilities are adequately identified, planned, and budgeted for through Flight Standards Service national systems. These resource requirements must be appropriately distributed to adequately meet the certification, surveillance, and enforcement workload demands generated by the industry nationwide. It is also responsible for administrative support services for Washington headquarters managers and employees.

C. There are three Flight Standards Service policy divisions. These policy divisions are the Air Transportation Division (AFS-200), the Aircraft Maintenance Division (AFS-300), and the General Aviation and Commercial Division (AFS-800). These divisions are responsible for the development and interpretation of regulations, policies, and guidance for the certification, inspection, and surveillance of air operators, air agencies, and airmen. Each policy division is assigned an area of functional responsibility according to specific expertise and organizational alignment. These divisions are responsible for determining the standards to be used for the certification of air operators, air agencies, and airmen.

D. The Technical Programs Division (AFS-400) is the Flight Standards division that provides coordina-

tion and leadership for research and development programs, all-weather programs, and human factors programs. This division also sets national operational requirements for en route procedures and instrument approach procedures.

E. The Flight Standards National Field Office (AFS-500) provides nationwide oversight and coordination for the implementation of operational programs. This division develops and publishes national program guidelines for the annual work program and executes the National Aviation Safety Inspection Program (NASIP). This division also provides national standardization and guidance for the administration of large air carrier certificates. The AFS-500 division has responsibility for inspector training, including the annual call for training requirements. AFS-500 also provides national oversight for the maintenance of human resource management systems concerning inspector job performance (such as currency of job task analysis, position descriptions, and performance standards).

F. The Regulatory Support Division (AFS-600) is located in Oklahoma City, Oklahoma. AFS-600 is responsible for providing support to the Flight Standards Service for automation, pilot and written test examiner standardization, and contract personnel support.

G. The RFSD's are responsible for managing and executing the daily operational programs of the Flight Standards Service through a system of district offices, Certificate Management Offices (CMO), and International Field Offices (IFO). The Flight Standards division managers within the regions have the responsibility for all Flight Standards activities within their respective regions. The RFSD staffs provide management support to the field offices for the execution of certification, surveillance, investigation, and enforcement functions. Most domestic RFSD's have international responsibilities for specific geographical areas outside the U.S. For example, the Western-Pacific Flight Standards Division is responsible for Asia and the Pacific territories and countries. Divisions with international responsibilities also provide consultative and liaison services to other countries on flight safety, certification, surveillance, and enforcement.

57. GOALS OF FLIGHT STANDARDS SERVICE.

A. The primary goal of the Flight Standards Service is to ensure continued enhancement of flight safety. This goal is particularly significant in view of economic deregulation; new technological developments; international manufacturing and repair of aircraft equipment; and the public demand for increased services. The Flight Standards Service must ensure that Federal Aviation Regulations (FAR) and FAA policy address these aspects of the aviation environment. The Flight Standards Service must enhance operational safety through aggressive aviation education programs and seminars for industry and the flying public. The Flight Standards Service must explore options for economic incentives and creative solutions for the improved safety compliance of operators.

B. Internally, the Flight Standards Service must ensure optimum availability and use of resources (manpower, financial, equipment, and information) to meet workload requirements brought on by changes in the industry. Systematic forecasting and planning for environmental and industrial changes are required to ensure adequate definitions of new programs and the adaptation of existing programs and work priorities. The Flight Standards Service needs to systematically evaluate whether national initiatives and ongoing line operations meet certification and surveillance program objectives. The permanent goals for the Flight Standards Service include the following:

- Adequate and appropriate airman training and certification
- Adequate operator certification and improvement of operator compliance
- Promotion, surveillance, and assessment of aviation safety in the operating environment
- Support for NAS capacity requirements
- Research and development of human factors relating to aviation safety
- Effective and efficient resource management policies, systems, and procedures

58.–62. RESERVED.

FIGURE 1.2.1.1.
EXECUTIVE DIRECTOR FOR REGULATORY STANDARDS AND COMPLIANCE ORGANIZATIONAL STRUCTURE

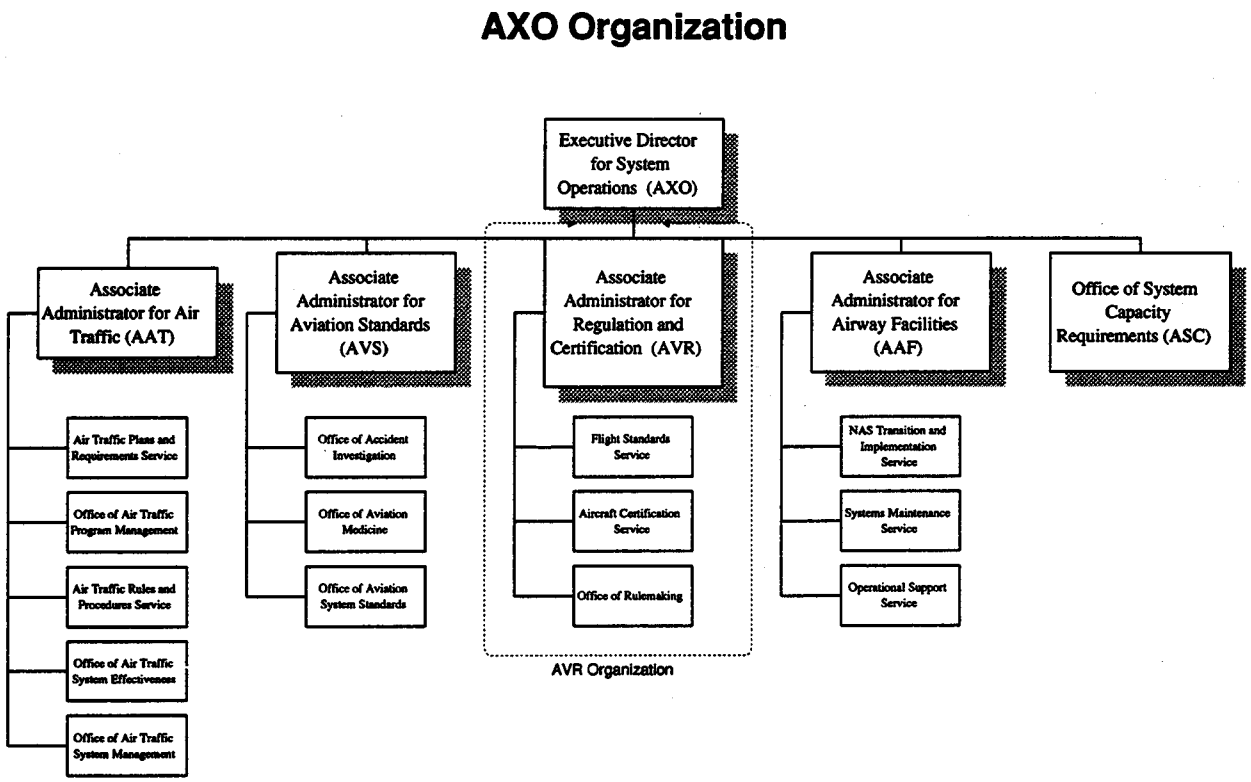

FIGURE 1.2.1.2.
OFFICE OF FLIGHT STANDARDS SERVICE ORGANIZATIONAL STRUCTURE

FLIGHT STANDARDS SERVICE

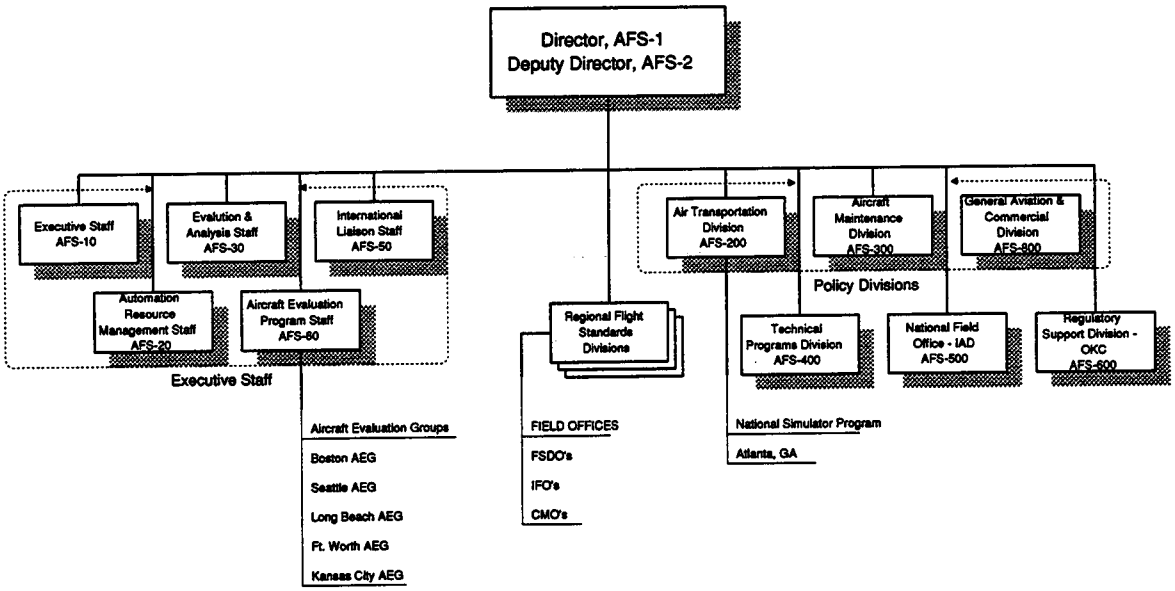

[PAGES 1-48 THROUGH 1-56 RESERVED]

CHAPTER 2. THE FEDERAL AVIATION ADMINISTRATION AND FLIGHT STANDARDS: HISTORY AND ORGANIZATION

SECTION 2. TITLE 49, UNITED STATES CODE

63. THE FEDERAL AVIATION ACT OF 1958. The Federal Aviation Act (FA Act) was signed into law on August 23, 1958. This public law created the Federal Aviation Administration (FAA) (then called the Federal Aviation Agency) and empowered it to promote flight safety in air commerce by prescribing safety standards. It gave the regulatory authority of aviation functions to two independent agencies: the FAA and the Civil Aeronautics Board (CAB). The CAB retained responsibility for the economic regulation of air carriers and for the investigation of aircraft accidents. On July 5, 1994, the FA Act, along with many other transportation-related statutes, was recodified into Title 49, United States Code (U.S.C.). Section 40101 of Title 49 describes six basic responsibilities of the FAA, which are summarized as follows:

- Regulation of air commerce to best promote its development and safety and to fulfill national defense requirements
- Promotion, encouragement, and development of civil aeronautics
- Control of the use of navigable United States airspace and the regulation of both civil and military operations in that airspace in the interest of the safety and efficiency
- Consolidation of air navigation facility research and development, as well as the installation and operation of those facilities
- Development and operation of a common air traffic control and navigation system for military and civil aircraft
- Providing assistance to law enforcement agencies in the enforcement of laws related to regulation of controlled substances, to the extent consistent with aviation safety

65. EVOLUTION OF AIR COMMERCE SAFETY REGULATION. In Article I, Section 8, of the U. S. Constitution, Congress is given the power to regulate and control interstate commerce. Interstate highway, railway, and water modes of transportation were regulated before the advent of air transportation. Air transportation was not regulated until the Air Commerce Act of 1926 empowered the Secretary of Commerce to establish the necessary regulatory system to control and regulate air commerce. The initial regulatory system that was established evolved into an organized system of Civil Aviation Regulations (CAR). The CAR were supplemented by corresponding Civil Aviation Manuals (CAM) which contained policies, procedures, and an interpretation of each CAR section. The CAR and CAM became outmoded with the rapid growth of air transportation and with the introduction of turbojet transport category airplanes in the 1950's. Recodification of the CAR began in 1961 and was completed in 1964 with the adoption of the Federal Aviation Regulations (FAR).

67. AVIATION PROMOTION AND REGULATION. Civil aviation regulation and promotion are clearly identified in Title 49 as major FAA responsibilities. The FAA promotes safe and efficient civil aviation by establishing and maintaining federal airways (including navigation aids (NAVAID)), and by supporting airport development, air traffic control services, and aviation educational programs. The FAA's principal responsibility in regulating aviation is to ensure safety at all levels of aviation activity. In fostering air safety through regulation, the FAA promotes civil aviation and helps to ensure its future. Safety of flight is dependent upon the regulation and enforcement of these regulations. Many other nations use the U.S. FAR as regulatory models for their civil aviation programs.

69. THE NATIONAL TRANSPORTATION SAFETY BOARD (NTSB). The NTSB was established by the Department of Transportation (DOT) Act and was made a part of the DOT on April 1, 1967. The NTSB was given the CAB functions, powers, and duties concerning aviation accident investigations, formulating probable cause of accidents, and making aviation safety improvement recommendations. On April 1, 1975, the NTSB was made an independent agency. By becoming independent of DOT, the NTSB was put in a more objective position for handling evaluations of DOT and FAA actions and officials,

and for formulating safety recommendations. Although FAA personnel do participate in aviation accident investigations conducted by the NTSB, they are not permitted to participate in determining the "probable cause" of any aviation accident investigated by the NTSB. At the request of the NTSB, certain aviation accidents are investigated by the FAA. The facts, conditions, and circumstances of these accidents are reported to the NTSB, and the NTSB determines "probable cause." Based on accident investigation findings, the NTSB recommends changes in aviation regulations, procedures, and equipment to improve aviation safety.

NOTE: On July 5, 1994, the Public Laws empowering the NTSB to conduct investigations and adjudication of FAA Enforcement and Penalty cases was recodified into Subtitle II of Title 49, U.S.C.

71. TRANSFER OF CAB FUNCTIONS TO DOT. The Airline Deregulation Act (ADA) was enacted on October 24, 1978. This act expressed the intention of Congress to diminish federal regulation of airline economics. This act abolished the CAB on December 31, 1984. On January 1, 1985, the administrative functions of the CAB were transferred to the Office of the Secretary of Transportation (OST). Included among these administrative functions was the requirement that air carriers be fit, willing, and able to perform as air carriers. Such air carriers must hold economic certificates or an exemption under Title 49 to provide air transportation to the public.

73. FLIGHT STANDARDS SERVICE AND TITLE 49, U.S.C. The FAA regulatory authority to prescribe, revise, and enforce standards is in Title 49, Subtitle VII, Chapter 447, "Safety Regulation." Subtitle VII is the foundation for the present structure of the Flight Standards Service. The Flight Standards Service is directly responsible for specific sections of Subtitle VII while other sections of Subtitle VII are the responsibility of other FAA offices. The Flight Standards Service, however, has surveillance and enforcement responsibilities related to all sections of Subtitle VII. The more important sections of Subtitle VII are briefly summarized as follows:

A. Section 44701. General Requirements. This section empowers the FAA to promote flight safety for civil aircraft in air commerce. The Administrator has the duty to require minimum standards for governing practices, methods, and procedures to provide for national security and safety in air commerce.

B. Section 44702. Forms of Applications. The FAA is authorized to prescribe the form and content of applications for certificates. The Administrator may require that these applications be administered under oath.

C. Section 44703. Airman Certificates. The FAA is authorized to issue airman certificates, which specify the capacity in which holders are authorized to serve as airmen.

D. Section 44704. Aircraft Certificates. The FAA is authorized to issue type certificates for aircraft, aircraft engines, and propellers. The Administrator can specify, in regulations, the appliances for which the issuance of type certificates is reasonably required, and can also issue those certificates.

E. Section 44705. Air Carrier Operating Certificates. The FAA is empowered to issue air carrier certificates and to establish minimum safety standards for the operation of the air carrier to whom the certificate is issued.

F. Section 44706. Airport Operating Certificates. The Administrator is authorized to issue or exempt airport operating certificates to airports serving air carriers certificated by DOT and to establish safety standards for the operation of those airports.

G. Section 44707. Air Agency Rating. The FAA is authorized to provide for the examination and rating of air agencies, such as civilian flight schools, repair stations, and other air agencies. The Administrator is also authorized to issue certificates for these flight schools, repair stations, and air agencies.

H. Section 44708. Air Navigation Facility Rating. The FAA is authorized to inspect, classify, and rate the suitability of any air navigation facility available for the use of civil aircraft. The Administrator is also authorized to issue a certificate for any such navigation facility.

I. Section 44709. Reexamination, Amendment, Suspension, and Revocation of Certificates. The FAA may reinspect any aircraft, air carrier, air agency, or component, and may reexamine any airmen holding an FAA certificate. The FAA may also issue orders that amend, modify, suspend, or revoke, in whole or in part, any type of certificate issued. Any person whose certificate is affected by an order of the Administrator under this section may appeal the Secretary's order to the NTSB.

J. Section 44710. Revocation for Controlled Substance Violations. This section provides that the FAA shall revoke the airman certificate of any airman that is convicted of a felony for violation of a controlled substance law if an aircraft was used to commit the offence or if the individual served as a crewmember of an aircraft in connection with committing the offense.

K. Section 44711. Prohibitions. This section prohibits any person or organization from conducting any air commerce operation unless the person or organization has proper certification and hires personnel who are properly certificated. This section also prohibits persons or organizations from performing any aviation services contrary to regulations prescribed under Subtitle VII.

L. Section 44713. Maintenance of Equipment in Air Transportation. In this section, each air carrier is given the duty to perform inspections, maintenance, overhaul, and repair of all equipment used in air transportation as required by Title 49 and the orders, rules, and regulations of the FAA.

M. Section 44715. Control and Abatement of Aircraft Noise and Sonic Boom. This section provides that the FAA, after consultation with the Secretary of Transportation and the Environmental Protection Agency (EPA), shall prescribe and amend standards and regulations for the measurement of aircraft noise and sonic boom.

75. PRIVATE SECTOR RESPONSIBILITIES.

A. The term "private sector," when applied to aviation, encompasses all individuals and organizations participating in air commerce. While individuals and organizations such as pilots, mechanics, air carriers, and manufacturers participate directly in air commerce, other individuals and organizations such as vendors, food caterers, travel agents, baggage handlers, and aircraft sales personnel participate indirectly. The FAA, which is part of the "public sector," has the duty (authorized by Title 49, Subtitle VII, "Aviation Programs") to establish minimum standards, rules, and national policies to provide adequately for national security and safety in air commerce. This responsibility for aviation safety, however, does not rest entirely with the FAA. Persons or organizations of the "private sector" are also obligated to provide for public safety. All airmen, air carriers, aircraft owners and operators, air agencies, and certain airport operators who qualify for and accept an FAA certificate, assume these "private sector" responsibilities.

B. A major part of air commerce is conducted by "private" persons or organizations engaged in air transportation. These persons or organizations are referred to as air carriers and are involved in the "common carriage" by aircraft, for compensation or hire, of persons, property, or mail. Title 49 requires a classification of safety standards appropriate to the differences between air transportation and other forms of air commerce. Therefore, safety standards applicable to air transportation (air carriers) are more stringent than standards applicable to persons or organizations not involved in common carriage.

77. AIR CARRIER RESPONSIBILITIES FOR PUBLIC SAFETY.

A. Section 44702(b) of Title 49 specifies, in part, that when prescribing standards and regulations and when issuing certificates, the FAA shall give full consideration to "the duty of an air carrier to provide service with the highest possible degree of safety in the public interest. . . ." Title 49 charges the FAA with the responsibility for promulgating and enforcing adequate standards and regulations. At the same time, Title 49 recognizes that the holders of air carrier certificates have a direct responsibility for providing air transportation with the highest possible degree of safety. The meaning of Title 49, § 44702(b), should be clearly understood. It means that this responsibility rests directly with the air carrier, irrespective of any action taken or not taken by an FAA inspector or the FAA.

B. Before certification, the FAA's objective is to make a factual and legal determination that a prospective certificate holder is willing and able to fulfill its duties as set forth by Title 49 and to comply with the minimum standards and regulations prescribed by the FAA. This objective continues after certification. Title 49, § 44709, specifies that, if a certificate holder fails to comply with the minimum standards and regulations, the FAA may reexamine any certificate holder or appliance. As a result of an inspection, a certificate may be amended, modified, suspended, or revoked, in whole or in part. Additionally, § 44713(b) generally provides that whenever an inspector finds that any aircraft, aircraft engine, propeller, or appliance used or intended to be used by any air carrier in air transportation, is not in condition for safe operation, the inspector shall notify the air carrier, and the product shall not be used in air transportation until the FAA finds that the product has been returned to a safe condition.

C. The following conditions or situations could indicate that an air carrier's management is unable or unwilling to carry out its duties as set forth by Title 49 (see volume 3, chapter 8, "Air Carrier Management Effectiveness"):

- Repetitive noncompliance with minimum standards and regulations
- Insufficient training programs and guidance
- Lack of concern or enthusiasm on the part of air carrier management for compliance with Title 49 and the FAR
- Lack of operational control of aircraft

- Lack of ensuring the airworthiness of aircraft
- Inaccurate recordkeeping procedures

NOTE: Title 49 and the FAR contain the principle that air carriers holding out services to the public must be held to higher standards than the general aviation community. Inspectors must also be aware of the private rights of citizens and air carriers. Since public safety and national security are among the FAA's highest priorities, FAA inspectors must be prepared to take action when any air carrier does not, or cannot, fulfill its duty to perform services with the highest possible degree of safety.

78.–80. RESERVED.

[PAGES 1-61 THROUGH 1-64 RESERVED]

CHAPTER 4. GENERAL DIRECTION, GUIDANCE, AND PROCEDURES

SECTION 2. COMPLIANCE AND ENFORCEMENT

129. GENERAL. Federal Aviation Administration (FAA) Order 2150.3A, "Compliance and Enforcement Program," contains the objectives, policies, responsibilities, guidelines, procedures, and legal aspects of the entire FAA compliance and enforcement program. This section contains information and guidance to be used by inspectors concerning specific areas of the compliance and enforcement program pertaining to Federal Aviation Regulations (FAR) Part 121 and 135 operators. These subject areas include the following:

- Air carrier voluntary disclosure of violations
- Deviations resulting from emergencies
- Violations involving multiple crewmembers
- System-wide violations
- Compliance with smoking regulations for in-flight operators

NOTE: Section 44702(b) of Title 49, United States Code (U.S.C.) (formerly § 601(b) of the Federal Aviation Act (FA Act) of 1958) requires that air carriers perform their services with the highest possible degree of safety in the public interest.

131. AIR CARRIER VOLUNTARY DISCLOSURE OF VIOLATIONS. Advisory Circular (AC) 120-56, "Air Carrier Voluntary Disclosure Reporting Procedures," contains detailed information and guidance that may be used by FAR Part 121 and 135 operators when electing to voluntarily disclose violations to the FAA. The sharing of violation information, a cooperative attitude between operators and the FAA, and an advisory approach to solving problems enhance and promote aviation safety. The inspector should, therefore, inform an operator that if the operator chooses to comply with the guidance in this section, the operator will be issued a letter of correction in lieu of civil penalty action.

A. Eligibility of Operator. When an inspector evaluates the eligibility of an operator for using voluntary disclosure procedures, the inspector should ensure that the operator meets the following five conditions:

(1) The operator immediately notified the FAA of the apparent violation after detecting it and before the agency learned of it.

(2) The apparent violation must have been inadvertent.

(3) The apparent violation does not indicate a lack of or reasonable question of basic qualification of the operator.

(4) Immediate action must have been taken, or begun to have been taken, upon discovery to terminate the conduct that resulted in the apparent violation.

(5) The operator must develop and implement a comprehensive fix satisfactory to the FAA.

NOTE: Ordinarily, the FAA will not forego legal enforcement action if the operator informs the FAA of the apparent violation during routine FAA investigations/inspections (that time from which the inspection team physically arrives on site until the time the team departs at the completion of the inspection), or in association with accidents and incidents.

B. Procedures. Inspectors should use the following procedures when applying the voluntary disclosure policy:

(1) Initial Notification by the Operator. The operator shall initially notify the appropriate principal inspector immediately after discovering the violation. This notification may be verbal, in written hard copy, or in written electronic copy. It is more important for the initial notification to be immediate than complete. The operator should not delay this notification just to gather information. Time permitting, this initial notification should cover, with as much detail as is available, at least the following items:

- A brief description of the apparent violation (to include an estimate of the duration of time that the apparent violation remained

undetected as well as how and when it was discovered)

- Verification by the operator that additional similar violations have not occurred after the initial violation was identified
- A brief description of the immediate action taken after the apparent violation was identified (to include the action taken to terminate the conduct that resulted in the apparent violation and the person responsible for taking that action)
- Verification from the operator that an internal evaluation is underway to determine if the apparent violation points to any system-wide problems
- A description of the corrective steps necessary to prevent the apparent violation from recurring
- Identification of the person responsible for preparing the comprehensive fix
- Acknowledgement from the operator that a detailed written report will be provided to the principal inspector within 10 calendar days after the discovery of the apparent violation

(2) FAA Response to Operator Notification. The principal inspector shall respond to the operator with a written acknowledgement of the initial notification. This response serves in lieu of a letter of investigation, provided the written report is completed according to the procedures set forth in AC 120-56. These procedures are summarized in subparagraph 131B(3).

(3) Operator's Written Report. Upon receipt of the operator's written report, the inspector should ensure that the written report contains the following:

- A specific list of the FAR violated
- A description of the apparent violation (to include the duration of time it remained undetected as well as how and when it was detected)
- A description of the immediate action taken to terminate the conduct that resulted in the apparent violation (to include when the action was taken and who was responsible for taking the action)
- An explanation that contains verification that the violation was inadvertent
- An analysis of the seriousness of the apparent violation and how the operator made the analysis (evidence shall be attached)
- A detailed description of the proposed comprehensive fix (to include the planned corrective steps (such as organization, procedures, manuals, and facilities), the responsibilities for implementing those corrective steps, and a time schedule for completion of the fix)
- Identification of the company official responsible for monitoring the implementation and completion of the comprehensive fix

(4) Review of Comprehensive Fix. The inspector shall work with the operator to review the comprehensive fix to ensure that it will prevent a recurrence of the violation.

(a) Complete Fix. When the proposed fix is found to be acceptable, the principal inspector shall prepare a letter of correction that includes the date when the fix will be implemented and the date when the fix will be completed.

(b) Incomplete Fix. If the proposed comprehensive fix cannot be fully developed within 10 calendar days, the operator should provide at least an overview of its plan. In any event, the operator shall provide a detailed description of the comprehensive fix to the principal inspector within 30 calendar days after the operator's initial notification of the apparent violation.

(5) Implementation of the Comprehensive Fix. During the implementation period, the principal inspector and the operator should continue to work together. The principal inspector has the latitude to advise and assist the operator in correcting any identified problems. Changes can be made to the comprehensive fix when a need is identified. When a change to a comprehensive fix has been agreed upon, the principal inspector shall prepare an amended letter of correction that reflects the change and that contains a plan for monitoring the implementation of the corrective steps. If, at any time, the principal or delegated inspector determines that the actual corrective steps accomplished are contrary to those documented in the comprehensive fix, the principal inspector may rescind the letter of correction, reopen the investigative report, and initiate appropriate legal enforcement action.

(6) Completion. At the conclusion of the implementation period, the principal inspector shall make a final assessment. If all elements of the com-

prehensive fix have been adequately accomplished, the principal inspector shall prepare a letter confirming that the comprehensive fix was satisfactorily implemented and completed. This letter shall be sent to the operator and used to close the investigation package.

(7) Informal Appeal Process. When disagreements occur regarding either the acceptance of a proposed comprehensive fix or changes to a comprehensive fix prior to its classification as satisfactory, the principal inspector and the operator may request that the issue be resolved at the next level of management within the FAA. This procedure provides for an independent assessment of the areas in disagreement.

(8) Closing the Case. The principal inspector has the authority to close the case; however, it may be appropriate for the inspector to consult other inspectors, regional specialists, or the Assistant Chief Counsel on when the case should be closed. After the letter of correction has been issued, the case is closed but will remain subject to a reopening in the event that the agreed upon actions covered in the comprehensive fix have not been completed to the satisfaction of the FAA.

(9) Subsequent Violations. If the same or similar violations are discovered subsequent to the FAA's completion of an investigation package, the FAA will not reopen the case unless it is determined that the operator failed to comply with all elements of the comprehensive fix. Additionally, if an operator decides to make further changes to programs or systems identified in a comprehensive fix once it becomes classified as satisfactory, the additional changes do not have to receive separate FAA approval under the terms of this disclosure policy.

(10) Separate Actions Against Airmen or Other Employees. The voluntary disclosure policy applies to individual certificated airmen or other employees of an operator when the operator makes a disclosure and is the focal point of a case, and the following conditions are met:

(a) The apparent violation occurred while the employee was acting on behalf of an operator involved in FAR Part 121 or 135 operations.

(b) The employee has immediately made the first report of the apparent violation to the employing operator.

(c) The employing operator must notify the FAA of the apparent violation immediately after the employee has reported it to the operator.

NOTE: If all the preceding conditions are not met, the principal inspector shall review all facts associated with the case and determine what action is appropriate.

C. Entry and Disposition of Self-Disclosure Cases into the Flight Standards Enforcement Information Subsystem. The FAA modified the Enforcement Information Subsystem (EIS), effective October 1, 1992, to safeguard self-disclosure information and compile statistical data. All references to the identities of the certificate holder, the reporting Flight Standards region, and the district office have been eliminated. Special Self-Disclosure Enforcement Investigation Report (EIR) numbers have been assigned to ensure anonymity. All self-disclosure EIR numbers are now issued by the Flight Standards National Field Office, AFS-500. The numbers will be like those used before, except that region and Flight Standards District Office (FSDO) designations will be replaced with "SD" for Self Disclosure and "00" for Flight Standards. The result is "93SD00XXXX." To open a self-disclosure case number, inspectors should call AFS-500 at (703) 661-0333, extension 5018, 7:30 a.m. through 4:30 p.m., eastern standard time. When entering information into the EIS, inspectors shall adhere to the following instructions:

(1) Type of Operator. On the computer-generated FAA Form 2150.5A, "Enforcement Investigative Report," inspectors shall identify the type of operator by one of the two-digit codes below:

- 00 - Scheduled air carrier 121
- 01 - Scheduled cargo carrier 121
- 02 - Scheduled air carrier 135
- 03 - Scheduled cargo carrier 135
- 04 - On-demand air carrier 135
- 06 - Domestic repair station 145
- 07 - Foreign repair station 145
- 13 - Airman
- 14 - Supplemental air carrier 121

NOTE: The source code will be filled automatically, and several other fields will be blanked automatically. The case will close automatically when the district office enters a date in block 27.

(2) Blank Data Fields. The following data fields on FAA Form 2150.5A will be blank in self-disclosure cases:

- Designator
- Address
- Telephone Number

- Date of Birth
- Sex
- FAA Certificate Number
- Aviation Employer
- Identification Number
- Aircraft Serial Number
- Owner Name
- Owner Address
- Region of Discovery
- Location
- Airport Identification
- Investigating Office
- Reporting Inspector
- Region/Field office

(3) The Chief's (Manager's Name, as Appropriate) Name Block. Type the appropriate name or enter X's in this block because the form will not print when no characters are entered; however, the computer will not store the typed name once the form is saved to the data base. The form should be signed by the approving official.

(4) New Data Fields. Four new data fields have also been added:

- SD FAA DATE: (YY/MM/DD): Date the FAA accepted the comprehensive fix offered by the operator
- SD PROBLEM CODE: Three-character numeric code (Use codes from the Program Tracking and Reporting Subsystem (PTRS) comment key word listings. This minimizes confusion and precludes the need for another set of codes.)
- SD PROBLEM DESCRIPTION: Brief description of problem (30 characters maximum)
- CORRECTIVE ACTION PLAN: Summary of long-term corrective steps with enough detail to show who, when, and how the problem will be solved (However, DO NOT include information that could identify a specific individual or certificate holder (1,200 characters maximum).)

(5) Self Disclosure Denied. A new source code "38 - SELF DISC - DENIAL," has been added to the EIS. This code is used in situations where the carrier reports an apparent violation, but the principal inspector determines that the reported violation does not qualify for a self disclosure and recommends a civil penalty or certificate action. In this case, if a self-disclosure number has already been assigned, inspectors should close the self-disclosure EIR as follows:

(a) Open a local EIR number and proceed using normal enforcement procedures.

(b) Use code 38 in the source block.

(c) Close out the self-disclosure EIR number and describe the reason for the denial in the self-disclosure EIR attachment.

(d) Reference the related EIR number in each report.

(6) Protecting the Identity of Violators Prior to Fiscal Year 1993. AFS-620 modified 623 of the total 789 closed cases to insert a generic self-disclosure identification (SD ID) code and blanked out any related identifying fields. The remaining cases have discrepancies in the data fields. In order to correct the data, AFS-620 developed an ad hoc report that is available to the FSDO. Inspectors should refer to EISUSERS.BB message of October 16, 1992, to obtain instructions on how to complete the report, or call AFS-540 at (703) 661-0333; or AFS-620 at (405) 954-6419.

(7) Self Disclosure Packages. Copies of closed self-disclosure EIR's should be sent to AFS-500. A complete investigative package for this purpose must include the following:

- Section A, FAA Form 2150-5A, generated from the computer
- Section B, Inspector's Summary and Analysis
- The FAA's written response to the certificate holder acknowledging initial notification
- The certificate holder's written report
- A copy of the letter of correction

133. DEVIATIONS RESULTING FROM EMERGENCIES. FAR §§ 135.19(c), 121.557(c), and 121.559(c) require that notification be sent to the FAA Administrator concerning any deviation an operator has made from the FAR as a result of an emergency. Each report of an emergency deviation from the FAR that involves an air carrier shall be investigated to determine if corrective action is necessary. A shared responsibility exists between Flight Standards Service and operators. Operators and crewmembers shall not be permitted to use the emergency

provisions of the FAR as an excuse for failing to comply with a regulation. On the other hand, inspectors must be cautious and ensure that an atmosphere does not develop in which a crewmember would hesitate to declare an emergency for fear of being unfairly criticized after the aircraft is safely on the ground. The investigation should include a determination as to whether the operator and crew were in compliance with such items as operations specifications, company procedures, and checklists. If a determination is made that the operator and crew performed properly, an enforcement action should not be initiated as a result of the deviation. If the emergency was caused by the operator's or airman's incompetence or disregard for a specific FAR, the inspector should follow the guidance provided in FAA Order 2150.3A.

135. VIOLATIONS THAT INVOLVE MULTIPLE CREWMEMBERS. If crewmembers are charged as a result of violations involving operations of aircraft requiring multiple crewmembers, inspectors should ensure that the proper crewmember is charged. The operator's manuals should be reviewed to determine the specific duties and responsibilities of individual crewmembers. If the operator's manuals are ambiguous, the inspector should ensure that the operator's manuals are changed. By referring to the wording of an FAR, the investigating inspector may be able to identify a particular crewmember as being culpable. The inspector shall open separate investigation files for each crewmember suspected of being in violation of the FAR.

137. SYSTEM-WIDE VIOLATIONS. System-wide violations involve multiple occurrences of the same violation by one or more operators. Inspectors should be aware that if multiple violations of the same regulation are occurring either by the same operator or by more than one operator, a misunderstanding of the regulation may be the cause rather than a deficiency in the operator's system. If an inspector's investigation reveals that noncompliance involves more than one operator and that it is due to a misunderstanding of the FAR, the inspector should provide the operators with the correct interpretation of the rule. After providing the correct interpretation of the rule, the inspector should advise the operators in writing that any continued non-compliance may result in enforcement action. Inspectors may identify a violation as being system-wide if the violation is characterized as having either of the following:

- Repetitive acts of noncompliance by the operator
- A single act, error, or omission which, in the inspector's opinion, may indicate widespread noncompliance with the FAR or operator procedures (Such occurrences may be brought to the inspector's attention during the initial investigation.)

138. COMPLIANCE WITH SMOKING REGULATIONS FOR IN-FLIGHT OPERATIONS. Principal operations inspectors (POI) shall ensure that U.S. and foreign air carriers to which they are assigned are aware of the public laws and the FAR banning smoking, and that their U.S. air carriers have taken appropriate actions to include procedures in their manuals and training curriculums for instructing all crewmembers regarding these requirements. The FAA position regarding enforcement of the smoking prohibitions contained in FAR §§ 121.317, 129.29, and 135.127 is to treat a reported violation as the FAA would any other safety rule, while at the same time exercising good judgment in determining the appropriate actions to be taken. The actions to be taken will differ according to the type of passenger noncompliance. Passenger noncompliance can be through ignorance of the rule, or unthinking reaction to the urge to smoke, or it can be willful noncompliance. For example, if a passenger lights a cigarette as a reflex action and, when told that smoking is not allowed, puts it out and does not light another one, no further action is necessary. On the other hand, if a passenger lights a cigarette and will not extinguish it when asked to do so, further action is necessary.

A. Guidance. POI's should ensure that operators have procedures in place for instructing crewmembers concerning the following:

(1) Procedures for Handling of Passengers in Noncompliance with Smoking Prohibitions. Operators should instruct flight attendants (F/A) on the following:

- How to use non-threatening methods to approach passengers who are not complying with the smoking rule
- How to avoid actions that could result in abusive passenger behavior
- How to avoid the involvement of other passengers to help obtain compliance from the "smoker," as this could cause passengers to interact in a negative way with each other

(2) Procedures for Handling of Noncompliant Passengers Who Refuse to Identify Themselves. POI's should ensure that their operators have procedures to notify the flightcrew if a passenger is suspected of smoking in the lavatory, of tampering with the lavatory smoke detector, or if a passenger refuses to extinguish a cigarette. The procedures should provide for identification (preferably one with a picture). The procedures should also address instances of a pas-

senger refusing to provide any identification. Crewmembers should obtain as much information as possible regarding that passenger, such as a physical description, seat number, boarding location, and names and addresses of any traveling companions. Operators must obtain the names and addresses of other passengers who are seated in the vicinity of the smoker, as these passengers may have to be contacted as witnesses later. Then, the pilot-in-command (PIC) should notify the operator that there is a noncompliant passenger on board who refuses to identify himself/herself, and request that the operator have law enforcement officials meet the flight at the gate. The law enforcement officials should be informed by the operator's personnel that they believe that a person may have violated a Federal law and the FAR. Regardless of the actions the law enforcement officials may take, it is important that the FAA be given enough information (evidence), including the proper identification of the alleged offender, to initiate an EIR. If the law enforcement officials obtain the identity of the smoker or person who tampers with a lavatory smoke detector, this information should be provided to the F/A in charge of the cabin, or the PIC, or station manager, as applicable. This person will then be responsible for ensuring that the information regarding the smoker's identification is included with the operator's report to the FAA describing the incident.

(3) Procedures for Handling of Physically Abusive, Noncompliant Passengers. Carriers should have procedures to address the following situations: if a passenger becomes physically abusive either toward another passenger or crewmember; or if a passenger has to be physically restrained; or if a flight crewmember must leave the flight deck to help restore order in the cabin; then the appropriate information should be obtained and the PIC should notify the operator and have the operator request that the appropriate law enforcement officials meet the flight at the gate.

(4) Reporting Noncompliance. All cases of noncompliance with the smoking regulations should be reported in a timely manner by the operator to the FAA in accordance with the procedures contained in the operator's manual (as required by FAR §§ 121.133 and 135.21, as applicable). The exception to this is the case where the person smoking immediately extinguishes the cigarette when asked to do so. The PIC and/or the F/A in charge of the cabin should fill out a report which, if feasible, both of them should sign. This report should be sent to the operator's personnel designated in the operator's and crewmembers' manuals. Some operators have indicated that they will develop a form that will list the information that should be given and include the address to which the form should be mailed. POI's should encourage operators to adopt this procedure. The report should include the following:

- The name and address of the smoker (if this information has been obtained)
- A physical description of the smoker
- The seat number in which the smoker was seated
- The location of the smoker's boarding and destination
- Names, addresses, and phone numbers of witnesses
- Names, addresses, and domiciles of the other crewmembers
- A statement and confirmation of whether or not the passenger briefing required by FAR § 121.571(a)(1)(i) was given, and whether or not the smoker was on board the aircraft when the briefing was given
- A statement and confirmation of whether or not the "no smoking" signs were illuminated or "no smoking" placards were posted
- A brief, objective, narrative of the incident
- The airline, flight number, and date
- Police report number if police were summoned

B. Summary. POI's should inform their operators of the following types of recommended practices for crewmember handling of smoker noncompliance with smoking prohibitions on non-smoking flights:

(1) Incidents That Require No Action. No action is required if a person lights a cigarette or other smoking material and, when advised that this is against the law and the FAR, immediately extinguishes it and does not light another cigarette.

(2) Incidents That Require Obtaining Information. Crewmembers should be instructed to obtain the report information (see 138A(4)) when one of the following situations occurs:

- A smoker refuses to immediately extinguish smoking materials
- A smoker or lavatory smoke detector "tamperer" becomes abusive
- The crew has evidence that a person has smoked in the lavatory

- The crew has evidence that a person has tampered with the lavatory smoke detector

(3) Incidents That May Require Involvement of Law Enforcement Officials. Crewmembers should request that police meet the flight at the gate when the flight arrives and obtain information when the following occurs:

- A smoker refuses to produce identification
- A person who is suspected of tampering with a lavatory smoke detector refuses to produce identification
- A person suspected of smoking in a lavatory refuses to produce identification
- A smoker or lavatory smoke detector tamperer becomes abusive toward crewmembers or other passengers

C. Procedures. Air carriers and passengers must comply with the regulations discussed in this paragraph, as well as with all other appropriate FAA safety regulations. Noncompliance with FAA safety regulations by either a passenger or an air carrier should result in an enforcement action being taken in accordance with FAA Order 2150.3A. With respect to passenger noncompliance with smoking prohibitions, the following information regarding enforcement action should be noted:

(1) Interference with a Crewmember. Passenger noncompliance with FAA safety regulations may result in interference with a crewmember, which is a violation of FAR § 91.11 and may also be a criminal violation under § 46504 of Title 49, U.S.C. Operators should have procedures in their manuals to ensure that crewmembers know what actions to take if a passenger interferes with a crewmember and/or does not comply with the smoking regulations. If the passenger interferes with a crewmember, the operator should involve local law enforcement officials. If passenger noncompliance does not result in crewmember interference, but the operator files a complaint with the FAA, the operator must provide enough information (evidence) to the FAA to ensure that an EIR can be initiated.

(2) Providing Evidence. Operators or other complainants must provide ample evidence, and FAA inspectors must ensure that ample evidence exists, to make the following determinations: whether a violation of the FAR has occurred; whether there is enough information to locate the passenger (his/her name and address); and whether statements from crewmembers and company officials will be required to corroborate the complaint. If an operator cannot provide the foregoing information, then no further action should be taken.

(3) Complaints. Complaints from other passengers should also contain enough information (including that previously described) so that it can be used to initiate an investigation.

(4) Circumstantial Evidence. Recently, some concerns have been expressed about enforcement actions being taken against passengers for noncompliance with the smoking regulations when the information provided by the operator and/or crewmember contains evidence that is only circumstantial in nature. Circumstantial evidence (as opposed to direct evidence) is indirect evidence. For example, if a crewmember does not observe a passenger smoking in a lavatory, but does observe that passenger leaving a lavatory with a package of cigarettes in his/her possession, does smell cigarette smoke while the person is in the lavatory or immediately after the person leaves the lavatory, and also observes ashes in the lavatory (although the crewmember may not have directly observed the passenger smoking in the lavatory), there is enough indirect (circumstantial) evidence to prove that the passenger was smoking. One legal encyclopedia ("Guide to American Law," West Publishing Company) describes circumstantial evidence as the following:

> Information and testimony presented by a party in a civil or criminal action that permit the making of deductions that indirectly establish the existence or nonexistence of the fact or event that the party seeks to prove.
>
> A party or witness who provides circumstantial evidence does not have actual personal knowledge of, and did not directly observe, the fact in issue, but because of the facts he or she knows or observed, he or she, and any other reasonable person, can logically deduce the existence of fact or event.

(5) Paragraph 405, "Evidence of Violations," in FAA Order 2150.3A. This paragraph does not, at the present time, explicitly discuss the use of circumstantial evidence in enforcement actions. The FAA Headquarters legal staff, however, has advised that circumstantial evidence may be used in many instances, including enforcement actions involving noncompliance with the smoking regulations, if an operator, crewmember, or passenger provides to the FAA the information contained in this paragraph.

139. POI NOTIFICATION AND ACTION. When an inspector initiates a violation investigation, the inspector should immediately notify the POI of the impending action. This will allow the POI to determine the extent of the problem and to ensure that

the operator takes corrective action. Additional coordination between the inspector and the POI may be necessary to determine who handles the enforcement action, in accordance with the guidance in FAA Order 2150.3A.

140. RESERVED.

[PAGES 1-109 AND 1-110 RESERVED]

CHAPTER 4. GENERAL DIRECTION, GUIDANCE, AND PROCEDURES

SECTION 4. EXEMPTIONS, DEVIATIONS, WAIVERS, AND AUTHORIZATIONS

155. EXEMPTIONS. The granting of an exemption is generally viewed as an alternative method of complying with a regulatory requirement. Exemptions are promulgated under Federal Aviation Regulations (FAR) Part 11. A grant of exemption and each specific condition and limitation is a regulatory requirement. A petition for exemption may be submitted to the Federal Aviation Administration (FAA) by any interested person.

157. CONTENT OF PETITION. Each petition for an exemption should contain the following:

- The rule requirement from which exemption is sought
- The nature and extent of the requested regulatory relief
- A description of each person or aircraft to be covered by the exemption
- Any information, views, or arguments to support the action sought
- The reasons why a grant of exemption would be in the public interest
- The action to be taken by the petitioner to provide a level of safety equivalent to that provided by the rule from which exemption is sought or the reason why a grant of exemption would not adversely affect public safety

159. PREPARATION AND MAILING OF PETITION. Each petition should be submitted to the FAA at least 120 days before the proposed effective date of the requested exemption. FAR Part 11 specifies the address for the proper FAA action office based on the subject of the petition. Serious consideration should be given to items listed in paragraph 157 by the prospective petitioner before the petition is written. Frivolous or ill-prepared petitions are rejected and both the petitioner's and the FAA's resources are unproductively used in the rejection process. Petitions are frequently rejected because the petitioner failed to identify and explain the reasons why a grant of exemption would be in the public interest. The petitioner's interest is not necessarily considered to be in the "public interest." A petitioner's statement that a grant of exemption would be in the public interest because it would reduce the petitioner's operating costs is not acceptable and is a reason for FAA rejection of the petition. Each petition for exemption should be well conceived and in writing.

161. PROCESSING THE PETITION. A summary of each petition for exemption is normally published in the Federal Register, and the public has 20 days to submit comments to the FAA-assigned public docket. After the close of the public comment period, the FAA action office considers all comments received and decides whether to accept or deny the petition. The decision document is then prepared, coordinated, signed, and mailed to the petitioner.

163. DISTRIBUTION AND AVAILABILITY OF EXEMPTIONS. Additional copies of both grants and denials of exemptions are mailed to each regional office. Each document is also placed in the archives of the FAA's computer system located in Oklahoma City (AFS-620) and may be accessed through the Automated Exemption System (AES). Access to this system may be obtained by contacting the program manager at each regional headquarters. A grant of exemption normally contains conditions and limitations applicable to the grantee and is valid for 2 years. However, some grants of exemption may be valid for only a few months (for example, delayed compliance with an aircraft modification due to the non-availability of parts).

165. AMENDMENT OF OPERATIONS SPECIFICATIONS. The operations specifications of an operator granted an exemption are amended to show that the certificate holder is authorized to use the exemption in conducting its operations. See paragraph A5 of the operations specifications.

167. PETITION FOR RECONSIDERATION. A petitioner who is denied an exemption may petition the FAA Administrator for reconsideration within 30 days after being notified of the denial of exemption. If a petition for exemption is granted, a person other than the initial petitioner may file a petition for reconsideration with the FAA Administrator within 45

days after the grant of exemption is issued. The petitioner's request for reconsideration of its petition must be based on the existence of one or more of the following:

- A finding of a material fact that is erroneous
- A necessary legal conclusion that is without governing precedent or is a departure from or contrary to law, FAA rules, or precedent
- An additional fact relevant to the decision which was not presented in the initial petition for exemption (The petition for reconsideration must state the reason the additional fact was not presented in the initial petition.)

169. PROCESSING A PETITION FOR RECONSIDERATION. A summary of a petition for reconsideration of a grant or denial of exemption may be published in the Federal Register. If accomplished, a reasonable period for public comment is announced in the summary. In either event (with or without publication in the Federal Register) the FAA action office prepares and coordinates the decision document. If a grant or partial grant of exemption is issued, the document is signed by the FAA official who has been delegated such authority and responsibility in FAR Part 11. If a denial of petition for reconsideration is prepared and coordinated, the decision document is signed by the FAA Administrator. Copies of the grant, partial grant, or denial of petition for reconsideration are mailed and placed in archives as previously discussed. If the petitioner disagrees with the FAA Administrator's decision, the petitioner may institute legal action within the Federal Appeals Court system.

171. DEVIATIONS, WAIVERS, AND AUTHORIZATIONS. Certain FAR sections allow the Administrator to issue a Certificate of Waiver, a Certificate of Authorization, or operations specifications which authorize a deviation. These actions permit a person or an organization to either deviate from a specific regulation or comply with special alternative provisions, conditions, or limitations. This regulatory flexibility is available to the Administrator when the specific regulatory section stipulates that it is available. There are three options available, which are referred to as follows:

A. Deviation. When a regulatory section contains phrases such as "unless otherwise authorized by the Administrator"; "the Administrator may . . . "; "if the Administrator finds . . . "; "the Administrator may authorize . . . "; "the Administrator allows a deviation . . . "; "notwithstanding the Administrator may issue operations specifications . . . "; or other similar words, the regulatory flexibility is referred to as a deviation.

B. Waiver. When the regulatory section contains phrases such as "the Administrator may issue a certificate of waiver . . . "; "in accordance with the terms of a certificate of waiver issued by the administrator"; or other similar words, the regulatory flexibility is referred to as a waiver.

C. Authorization. When the regulatory section contains words such as "in violation of the terms of an authorization issued under this section"; "unless a certificate of authorization . . . "; or other similar words, the regulatory flexibility is referred to as an authorization.

NOTE: If the specific regulatory section does not stipulate that a deviation, waiver, or authorization may be granted or issued, compliance with the regulation is mandatory. In these cases, the only methods of obtaining relief from the regulation is through the exemption process.

173. WAIVERS AND AUTHORIZATIONS. When a regulatory section stipulates that a waiver or authorization is permitted, any person may apply for a certificate of waiver or a certificate of authorization. FAA Form 7711-2, "Application for Certificate of Waiver or Authorization," must be prepared and signed by the applicant and delivered or mailed to the appropriate FAA regional or district office for processing (see figure 1.4.4.1. for an example of FAA Form 7711-2).

A. The application must be processed in a timely manner. The assigned inspector shall review the application, obtain appropriate additional information from the applicant, if necessary, and determine whether the applicant has provided adequate justification for a temporary waiver or authorization. The inspector shall also determine whether the applicant will provide an equivalent level of public safety during the conduct of any operation under a certificate of waiver or authorization. If the application is denied, the reasons for denial shall be specified in a letter to the applicant. If the waiver or authorization is granted, the inspector shall prepare FAA Form 7711-1, "Certificate of Waiver or Authorization," (figure 1.4.4.2.) for review by the authorizing FAA manager or the manager's designated representative. The completed Certificate of Waiver or Authorization, dated and signed by the responsible FAA manager, will be mailed or delivered to the applicant. A copy of the application for a Certificate of Waiver or Authorization, both front and back, and a copy of the completed Certificate of Waiver or Authorization, shall be retained in the files of the issuing office.

B. A Certificate of Waiver or Authorization shall not be issued for any operation conducted under FAR Parts 121, 125, 129, or 135. Requests for a deviation from these Parts must be requested and processed in accordance with the following paragraphs.

175. DEVIATIONS. When a regulatory section stipulates that a deviation is permitted, any person or organization may apply for a deviation. Deviations may be granted and issued to operators conducting operations under FAR Parts 121, 129, or 135. To apply for a deviation, an operator must submit a specific request to the FAA. The application must be made by a letter that identifies the specific regulatory sections from which a deviation is requested. The letter and attachments, if appropriate, must contain the specific reasons the deviation is requested, information to show that an equivalent level of safety will be maintained, and any other information the FAA may require. The types of information that must be submitted with the request for a deviation are described in other sections of this handbook that relate to the specific subject matter. Unless otherwise specified by this handbook, deviations requested by operators conducting operations under FAR Parts 121, 129, and 135 must be authorized for use by operations specifications. Approval, denial, and reconsideration procedures for processing deviation requests shall be the same as the procedures for processing, issuing, or amending operations specifications. District office recordkeeping requirements for each deviation are the same as operations specifications recordkeeping requirements.

177. DEVIATIONS FOR MILITARY CONTRACT OPERATIONS.

A. Title 49, United States Code (U.S.C.). Section 40118 of Title 49, U.S.C. (formerly § 1117 of the Federal Aviation Act (FA Act) of 1958) provides for the air transportation of government-financed passengers and property. Section 40118 of Title 49, U.S.C. also permits the use of a foreign operator pursuant to bilateral agreement with the government of the state of the foreign air carrier.

(1) Normally, the transportation of government-financed persons and property must be provided by air carrier certificate holders authorized to operate under FAR Part 121. FAR § 121.57 permits the Administrator to authorize deviations to the applicable requirements of FAR Part 121, when necessary, so that operators may perform certain unique operations under a military contract. Operators who determine that deviations from certain FAR Part 121 requirements may be needed to operate under a Department of Defense (DOD) contingency plan must arrange for the Air Mobility Command (AMC) to submit an application for deviation (application to amend operations specifications) on their behalf. Operator requests for military contract deviations must be submitted to the following address:

Assistant for Civil Air
DCS for Operations and Transportation
HQ AMC/XOC
ARINC CODE:BLVMAMC
FAX: (618) 256-6088
Telephone: (618) 256-6751

NOTE: The guidance in this paragraph does not apply to public aircraft operations. Guidance for these operations will be provided at a later date.

(2) If the AMC elects to request such relief, it will submit an application, on behalf of all affected operators, directly to the manager of the Air Transportation Division, AFS-200. AFS-200 will in turn provide a copy to each operator's certificate-holding district office (CHDO). The CHDO shall immediately advise its regional office that AMC, on behalf of the operator, has forwarded an application (for a deviation and amended operations specifications) to AFS-200. The CHDO shall analyze the request as soon as possible and forward its recommendations to AFS-200 through the regional office by the most expeditious means available.

B. Amendment of Operations Specifications. If the application is approved, a draft of the operations specifications paragraph authorizing the deviation or general guidance for the CHDO to use in drafting a non-standard paragraph for inclusion in the operator's operations specifications will be provided by the appropriate policy division. The CHDO shall issue the amended operations specifications to the operator. The amendment shall contain an expiration date consistent with the duration of the specific military operation. However, the operator shall be advised that the Administrator may, at any time, terminate the grant of deviation authority covered by the amended operations specifications.

179. DEVIATION TO PERFORM AN EMERGENCY OPERATION.

A. FAR §§ 121.57 and 135.19 specify requirements for obtaining deviation authority to perform an emergency operation. The term "emergency operations" means an immediate but temporary action to prevent or reduce the loss of life or property when an unanticipated threat to life or property occurs. Operations under a long-term contract to provide certain types of protection (such as rescue, fire-fighting, security) to the public cannot be classified as an unanticipated, temporary action.

FYI: An "emergency operation" under FAR §§ 121.57 and 135.19 is not related to the pilot-in-command (PIC) responsibility and authority (emergency authority) provided in FAR § 91.3.

B. The nature of the emergency dictates whether a verbal or written amendment of operations specifications is justified. The manager of the CHDO must make this determination. If time permits, the manager of the CHDO may wish to consult by telephone with the regional office manager. The authorization to deviate, whether verbally or by written amendment to the operations specifications, must be justified, applicable only to a specific emergency operation, and for a temporary and limited period of time. If a verbal authorization is given, the certificate holder must provide documentation describing the nature of the emergency to the CHDO within 24 hours after completing the operation.

181. USE OF FAA FORM 8430-6, "ADMISSION TO FLIGHT DECK."

A. Personnel Authorized. FAR § 121.547 allows certain individuals authorized by the operator and the Administrator (in addition to aviation safety inspectors (ASI) who hold FAA Form 110A, the ASI credential) to be admitted to the flight deck. In such cases, the individual shall be issued an FAA Form 8430-6.

(1) FAA Personnel. Requests for admission to an air carrier flight deck by FAA (non-Flight Standards personnel) or FAA-associated personnel under the provisions of FAR § 121.547(a)(3), should be submitted, through channels, to the CHDO concerned or, in the case of Headquarters personnel, to AFS-200.

(2) Other-Than-FAA Personnel. Requests by individuals other than FAA personnel (or FAA-associated personnel) for admission to a flight deck should be submitted to the operator concerned. The operator, in turn, shall forward the request to the appropriate CHDO. The CHDO, upon receipt of a request, should examine it to determine if such authorization is justified. When issuing FAA Form 8430-6, principal operations inspectors (POI), or their designated representatives, must determine that all required information is complete and that the request is appropriately justified.

B. Restrictions. Authorization for admission to the flight deck and the issuance of FAA Form 8430-6 shall be restricted to key officials of airlines, aviation-oriented industry personnel, and FAA personnel or FAA-associated personnel. Any deviations will require approval by the regional office prior to issuance. Except for those categories of persons shown above, FAA Form 8430-6 is not to be issued unless the request is received from the carrier or operator and includes a justification for that person's presence on the flight deck. These restrictions are imposed in the interest of improved flight deck security. Operator procedures should require all persons to make arrangements for flight deck entry prior to the flight and to board the aircraft with the flightcrew.

C. Technical Representatives. Individuals such as representatives from aviation manufacturers are authorized by FAR § 121.547(c)(6) to be present on the flight deck without a seat in the cabin and are not to be issued an FAA Form 8430-6. See paragraph 183 for specific instructions.

NOTE: FAA Form 8430-6 is issued for a specific time period, which may not exceed 6 months from the date of issuance.

D. Disposition of FAA Form 8430-6. The original is forwarded to the applicant, and the second copy is retained at the CHDO.

E. Removal of Authorization. Upon evidence of abuse of FAA Form 8430-6, the issuing authority may recall the form. It shall be canceled by certified mail if the holder ceases to be employed in the capacity in which its issuance was predicated and the holder fails to return the form voluntarily.

F. Transmittal Letter. When the completed FAA Form 8430-6 is processed and returned to the air carrier or individual concerned, it should be made clear to all holders, including FAA personnel, that this authorization may not be issued for the purpose of free transportation. The issuing authority shall forward a transmittal letter with each issuance (see figure 1.4.4.3.).

183. ADMISSION TO FLIGHT DECK WITHOUT SEAT IN CABIN—FAR § 121.547.

A. Technical Representatives. FAR § 121.547 lists those persons who may be admitted to the flight deck. However, except as otherwise provided in FAR § 121.547(c), such persons must also have a seat in the passenger compartment. FAR § 121.547(c)(6) contains special provisions for authorizing flight deck authority without a seat in the cabin for certain technical representatives of the manufacturer of the aircraft or its components, whose presence on the flight deck is necessary to perform the duties of monitoring the aircraft equipment or operating procedures. In this case, written authorization from both the Administrator and the operator is required.

NOTE: FAA Form 8430-6 will not be used for granting authorizations to technical representatives. However, except as specified herein, the basic procedures used for handling such requests will be as specified in paragraph 181.

B. Letter of Authorization (LOA). In accordance with FAR § 121.547(c)(6), the CHDO shall issue an LOA. The validity period should not exceed 6 months from the date of issuance. See Figure 1.4.4.4.

184. RESERVED.

FIGURE 1.4.4.1.
"APPLICATION FOR CERTIFICATE OF WAIVER OR AUTHORIZATION"
(FRONT)

No certificate may be issued unless a completed application form has been received (14 C.F.R. 91, 101, and 105).

U.S. Department of Transportation
Federal Aviation Administration

APPLICATION FOR CERTIFICATE OF WAIVER OR AUTHORIZATION

Form Approved: O.M.B. No. 2120-0027

APPLICANTS — DO NOT USE THESE SPACES

Region | Date

Action
☐ Approved ☐ Disapproved — *Explain under "Remarks"*

Signature of authorized FAA representative

INSTRUCTIONS

Submit this application in triplicate (3) to any FAA Flight Standards district office.

Applicants requesting a Certificate of Waiver or Authorization for an aviation event must complete all the applicable items on this form and attach a properly marked 7.5 series Topographic Quadrangle Map(s), published by the U.S. Geological Survey (scale 1:24,000), of the proposed operating area. The map(s) must include scale depictions of the flightlines, showlines, race courses, and the location of the air event control point, Police dispatch, ambulance, and fire fighting equipment. The applicant may also wish to submit photographs and scale diagrams as supplemental material to assist in the FAA's evaluation of a particular site. Application for a Certificate of Waiver or Authorization must be submitted 45 days prior to the requested date of the event.

Applicants requesting a Certificate of Waiver or Authorization for activities other than an aviation event will complete items 1 through 8 only and the certification, item 15, on the reverse.

1. Name of organization

2. Name of responsible person

3. Permanent mailing address | House number and street or route number | City | State and ZIP code | Telephone No.

4. FAR section and number to be waived

5. Detailed description of proposed operation *(Attach supplement if needed)*

6. Area of operation *(Location, altitudes, etc.)*

7a. Beginning *(Date and hour)*

b. Ending *(Date and hour)*

8.

Aircraft make and model (a)	Pilot's Name (b)	Certificate number and rating (c)	Home address *(Street, City, State)* (d)

FAA Form 7711-2 (6-88) Supersedes Previous Edition

FIGURE 1.4.4.1.—Continued
(REVERSE SIDE)

ITEMS 9 THROUGH 14 TO BE FILLED OUT FOR AIR SHOW/AIR RACE WAIVER REQUESTS ONLY.

9. The air event will be sponsored by:

10. Permanent mailing address	House number and street or route number	City	State and ZIP code	Telephone No.

11. Policing *(Describe provisions to be made for policing the event.)*

12. Emergency facilities *(Mark all that will be available at time and place of air event.)*

☐ Physician ☐ Fire truck ☐ Other—*Specify* _____

☐ Ambulance ☐ Crash wagon _____

13. Air Traffic control *(Describe method of controlling traffic, including provision for arrival and departure of scheduled aircraft.)*

14. Schedule of Events *(Include arrival and departure of scheduled aircraft and other periods the airport may be open.)*

Hour (a)	Date (b)	Event (c)

If sufficient space is not available, the entire schedule of events may be submitted on separate sheets, in the order and manner indicated above.

Please Read The undersigned applicant accepts full responsibility for the strict observance of the terms of the Certificate of Waiver or Authorization, and understands that the authorization contained in such certificate will be strictly limited to the above described operation.

15. Certification — I CERTIFY that the foregoing statements are true.

Date	Signature of applicant

Remarks

FAA Form 7711-2 (6-88) Supersedes Previous Edition

FIGURE 1.4.4.2.
"CERTIFICATE OF WAIVER OR AUTHORIZATION"

U.S. DEPARTMENT OF TRANSPORTATION
FEDERAL AVIATION ADMINISTRATION

CERTIFICATE OF WAIVER OR AUTHORIZATION

ISSUED TO

ADDRESS

This certificate is issued for the operations specifically described hereinafter. No person shall conduct any operation pursuant to the authority of this certificate except in accordance with the standard and special provisions contained in this certificate, and such other requirements of the Federal Aviation Regulations not specifically waived by this certificate.

OPERATIONS AUTHORIZED

LIST OF WAIVED REGULATIONS BY SECTION AND TITLE

STANDARD PROVISIONS

1. A copy of the application made for this certificate shall be attached to and become a part hereof.
2. This certificate shall be presented for inspection upon the request of any authorized representative of the Administrator of the Federal Aviation Administration, or of any State or municipal official charged with the duty of enforcing local laws or regulations.
3. The holder of this certificate shall be responsible for the strict observance of the terms and provisions contained herein.
4. This certificate is nontransferable.

NOTE.—This certificate constitutes a waiver of those Federal rules or regulations specifically referred to above. It does not constitute a waiver of any State law or local ordinance

SPECIAL PROVISIONS

Special Provisions Nos. _____ to _____, inclusive, are set forth on the reverse side hereof.

This certificate is effective from _____ to _____, inclusive, and is subject to cancellation at any time upon notice by the Administrator or his authorized representative.

BY DIRECTION OF THE ADMINISTRATOR

_____ (Region) _____ (Signature)

_____ (Date) _____ (Title)

FAA Form 7711-1 (7-74) U.S. GPO: 1984 — 570-191/10199

FIGURE 1.4.4.3.
SAMPLE LETTER OF AUTHORIZATION (CABIN SEAT REQUIRED)

Flight Standards District Office
Parkway Building
1300 South Meridian, Suite 601
Oklahoma City, OK 73108

[*date*]

Mr. Eric Townsend
Director of Operations
ABC Airlines, Inc.
417 Oakton Boulevard
Enid, OK 78154

Dear Mr. Townsend:

Enclosed is Federal Aviation Administration (FAA) Form 8430-6, "Admission to Flight Deck," which will permit your representative access to *[ABC Airlines]* flight decks during the performance of official duties. In order to assist in the proper use of this form, we provide the following guidelines:

The standard boarding pass must be issued, and a seat in the passenger cabin must be available, since the form, as indicated by its title, only permits the holder access to the flight deck.

FAA Form 8430-6 is issued in accordance with the provisions of Title 49, United States Code (U.S.C.) and is honored subject to the discretion of the individual air carrier, as well as the approval of the PIC. The holder of this form shall secure an endorsement from the air carrier prior to use.

Additionally, in the interest of flight deck security, the holder should make prior arrangements to board the aircraft with the flightcrew.

Federal Aviation Regulations (FAR) § 121.542(b) states that no flight crewmember (including jumpseat occupants) may engage in any activity during a critical phase of flight that could distract from or interfere in any way with the proper conduct of those duties. Non-essential conversations on the flight deck and non-essential communications involving the cabin and flightcrews are not permitted during a critical phase of flight. Critical phases of flight include all ground operations involving taxi, takeoff, and landing and all other flight operations conducted below 10,000 feet, except cruise flight.

Upon expiration, we request that this flight deck authorization be returned to this office for disposition.

Sincerely,

George E. Johns
Principal Operations Inspector

FIGURE 1.4.4.4.
SAMPLE LETTER OF AUTHORIZATION (CABIN SEAT NOT REQUIRED)

Flight Standards District Office
Parkway Building
1300 South Meridian, Suite 601
Oklahoma City, OK 73108

[*date*]

Mr. James W. Pratt
Pratt & Whitney Aircraft Division
United Technologies Corporation
Washington, D.C. 22020

Dear Mr. Pratt:

This refers to the request from Mr. M. B. Oakes, Assistant to Vice President of Flight Operations, Trans World Airlines, Inc. (TWA), dated January 27, 1994, concerning authorization for your admission to the flight deck of TWA flights without a seat in the cabin.

As a technical representative for the Pratt & Whitney Aircraft Division (P&W), you may use this letter as written authority for your admission to the flight deck of TWA flights in accordance with the provisions of Federal Aviation Regulations (FAR) § 121.547(c)(6) for the purpose of observing and monitoring the operation of P&W engines on TWA aircraft.

For security reasons, please make arrangements prior to each flight for admission to the flight deck and board the aircraft with the flightcrew.

FAR § 121.542(b) states that no flight crewmember (including jumpseat occupants) may engage in any activity during a critical phase of flight that could distract from or interfere in any way with the proper conduct of those duties. Non-essential conversations on the flight deck and non-essential communications involving the cabin and flightcrews are not permitted during a critical phase of flight. Critical phases of flight include all ground operations involving taxi, takeoff, and landing, and all other flight operations conducted below 10,000 feet, except cruise flight.

This authorization is valid through [*date—not to exceed 6 months from date of issuance*] unless sooner canceled by either the air carrier or by this office.

Sincerely,

George E. Johns
Principal Operations Inspector

[PAGES 1-127 AND 1-128 RESERVED]

CHAPTER 4. GENERAL DIRECTION, GUIDANCE, AND PROCEDURES

SECTION 5. CUSTODIANS OF DATA BASES

185. PURPOSE. This section contains guidance for aviation safety inspectors (ASI) concerning the use of computer data bases. Most information necessary to the inspector is computer-generated and stored in data bases. By accessing these data bases, inspectors are able to stay up to date in the rapidly changing aviation environment.

187. LOCATION OF DATA BASES. Federal Aviation Administration (FAA) inspectors have access to many data bases, most of which reside in an IBM mainframe computer in Plano, Texas, as part of the Flight Standards Information System (FSIS). See figure 1.4.5.1. A few data bases are located on IBM-compatible personal computers (PC) through Bulletin Board Services (BBS). See figure 1.4.5.2. The Aviation Forum (AVSIG) is located on CompuServe, a large commercial computer whose data base is open to the public.

189. ACCESSING DATA BASES. All data bases are accessed by computers through telecommunication links. These links are normally modems connected to telephone lines. Some computers are stand-alone units containing communications software and a dedicated modem. Others are connected to a local area network (LAN). The LAN will have its own communications links and software. ProComm™, a type of communications software, is one type of software used in the Flight Standards Service. Each office has copies of ProComm user manuals available to FAA personnel wishing to access data bases.

A. Help with Accessing Data Bases. Inspectors can obtain information about data bases from the following sources:

(1) IBM Mainframe Data Bases. A Department of Transportation publication, "FSIS Primer," (VR FSIS-T-3631), contains step-by-step guidance for accessing the various subsystems within the IBM mainframe.

(2) BBS Data Bases. The ProComm user's manual contains detailed guidance for logging on to BBS's. See figure 1.4.5.3. for guidance on setting up a dialing directory.

(3) CompuServe Data Bases. The user's manual for CompuServe provides automatic log-on assistance to subscribers. In order to access the Aviation Forum, inspectors must type, "GO AVSIG."

B. Additional Help. Additional help is available as follows:

(1) LAN Administrator. The LAN Administrator often has specialized training in and additional manuals on the various data bases.

(2) Hot Line. The hot line at (405) 231-5020 can assist with most access problems to FSIS.

(3) Systems Operator (SYSOP). For help with accessing the various BBS's, inspectors should use the telephone numbers listed in figure 1.4.5.4. and ask for the SYSOP.

(4) CompuServe Help Line. For access to CompuServe Information Services, inspectors should call 1-800-848-8990. Users of CompuServe must purchase the software and pay monthly user and access fees.

191. REQUESTS FOR INFORMATION UNDER THE "FREEDOM OF INFORMATION ACT" (FOIA). Any person may request public information—that is, information not deemed as "privacy information" or otherwise classified—under the FOIA. Requests for information contained in FAA computerized data bases must be released by data base custodians if this information is determined to be releasable under the FOIA. Requests for information from the public shall be handled in an expedited manner as required by the FOIA. Any request for data base information received by a Flight Standards facility shall be forwarded to the appropriate data base custodian, and a written response shall be provided to the requesting party indicating that the request for information has been forwarded to the data base custodian. Responses to the public must be accomplished within 10 days of receipt of the request. Further information on the FOIA is contained in FAA Order 1200.23, "Public Availability of Information."

192.–204. RESERVED.

FIGURE 1.4.5.1.

FLIGHT STANDARDS DATA BASES ON THE IBM MAINFRAME PLANO, TEXAS

Subsystem	Description	FAA Custodian
ADS Airworthiness Directives Subsystem	Includes full text of all current and historical AD's. This gives inspectors fast access to all AD's for any kind of aircraft.	AFS-620
AES Automated Exemption Subsystem	Includes all current, expired, and denied exemptions. Helps FAA personnel monitor FAR exemptions, and alerts petitioners regarding expiration dates.	ARM-1
AFARS Automated Federal Aviation Regulations Subsystem	Includes full current text of all FAR. Permits FAA personnel to search for all FAR references to any subject, and to find citations and cross-references within the regulations.	AFS-620
AIDS Accident/Incident Data Subsystem	Includes information reported by field inspectors for all accidents and incidents, such as data on the aircraft, crew, type of flying, weather conditions, location of the accident or incident, facilities, injuries, and causal factors.	AFS-620
EIS Enforcement Information Subsystem	Includes reports of all FAR violations and their disposition. Aids quick and efficient enforcement by permitting data entry, query, and report generation in field offices. This system has standardized and unified enforcement information from many organizations.	AFS-620
ISIS Integrated Safety Information Subsystem	A query-only system that is designed to provide fast and easy access to much of the information in other FSIS subsystems regarding air operators, aircraft and airmen.	AFS-620
MMELS Master Minimum Equipment List Subsystem	Includes MMEL's, which specify conditions under which each make and model aircraft may operate temporarily when some equipment is inoperative.	AFS-260
NARIS National Aircraft Registration Information Subsystem	Allows users to access registration information on selected aircraft, and request microfiche aircraft registry folder including lien and lease information.	AVN-450
NPTRS National Program Tracking and Reporting Subsystem	A read-only system, which contains the most recently uploaded PTRS data from all Flight Standards offices. It includes inspector information, and the results of inspection and surveillance activities. Also includes National Program Guidelines and total work program accomplishments.	AFS-620
NOPSS National Operations Specifications Subsystem	A read-only system, which contains the most recently uploaded OPSS data from all Flight Standards offices. It provides reports of authorizations and limitations.	AFS-620
NVIS National Vital Information Subsystem	A read-only system, which contains the most recently uploaded VIS data from FSDO's. It includes reference data on air operators, air agencies, airmen, aircraft, and facilities.	AFS-620
PS Policy Subsystem	Stores full text of regulatory guidance documents (AC's, policy memorandums, handbooks, orders, notices and medical guidelines).	AFS-620

NOTE: More subsystems are scheduled to be added to the IBM mainframe in the near future.

FIGURE 1.4.5.2.

FLIGHT STANDARDS DATA BASES ON IBM PERSONAL COMPUTERS (PC)

Technical Info	Description
Air Transportation Division BBS AFS-200 (202) 267-5231 2400 Baud	The bulletin board supports the following special interest areas: Transport Category Aircraft (FAR Part 25); Small Aircraft (FAR Part 23); Rotorcraft Helicopter (FAR Parts 27 & 29); New Documents; Flight Standardization Board (FSB) Documents; Draft Documents (proposed for 14 day public comment period); Comments concerning draft documents. Voice communications: (202) 267-3460/6354
Pilot Examiner BBS AFS-634 1-800-858-2107 2400 Baud	An open forum for Pilot Examiners, Written Test Examiners, FAA Inspectors, Flight Instructors. Topics of discussion are normally related to airman certification and aviation safety. Voice communications: (405) 954-4753
FAA Headquarters BBS (202) 267-5697 9600 Baud	An open forum between FAA regions, centers, and headquarters. Supports conferences on Total Quality Management, Strategic Planning, Program Evaluation, Intermodalism, and Budget and Accounting. Voice communications: (202) 267-3332
MMEL BBS NE-FSDO-05 Portland, ME (207) 780-3297 2400, 4800, and 9600 Baud	Contains most MMEL's in text or compressed text format. This BBS also contains some sample MEL's and assistance with certification for small FAR Part 135 operators. Voice communications: (207) 780-3263
Orlando BBS SO-FSDO-05 Orlando, FL Node 1: 9600 Baud (800) 645-3736 Node 2: 2400 Baud (407) 648-6309	Selected FAA information and publications, aircraft MMEL's and other documents of interest to the aviation community. Its extensive aviation library may be downloaded. FAA Inspectors will be given access to areas not available to the general public. Voice communications: (407) 648-6251
Flight Standards National Field Office (FSNFO) (703) 661-0235 2400, 9600 Baud	Selected FAA information and publications, operations specifications, ASI handbook draft material. FAA inspectors will be given access to areas not accessible to the public. Voice communications: (703) 661-0333, X5124

NOTE: More BBS's are scheduled to come online in the near future. Most of the BBS's listed above can provide other aviation-related BBS's.

FIGURE 1.4.5.3.
PROCOMM DIALING DIRECTORY

DIALING DIRECTORY: PCPLUS DIR

NAME	NUMBER	BAUD	PDS	D	P	SCRIPT
1. NE-05, MMEL BBS	*,2077803297	2400	N81	F	D	
2. SO-15, AVIATION BBS	*,4076486309	2400	N81	F	D	
3. AFS-200, AT BBS	*,2022675231	2400	N81	F	D	
4. AFS-200, HQ BBS	*,2022675697	2400	N81	F	D	
5. AFS-634, DPE BBS	*,18008582107	2400	N81	F	D	
6. SO-15, NODE-1, BBS	*,18006453709	9600	N81	F	D	
7. AFS-500	*,7036610235	9600	N81	F	D	
8.						
9.						
10.						

*[FTS Prefix]

NOTE: If it is necessary to insert a code in front of the phone number to get an outside line, users should separate that code from the phone number with a comma. This should provide enough delay for the phone to switch to the outside line before dialing begins. In the example above, 8 is used to access long distance service, and 9 is for local calls.

All BBS's listed above have the following communication parameters:

N - Parity None
8 - Bit Bites
1 - Stop Bit

Baud rates will vary between 2400 and 9600. All BBS's support Hayes-compatible modems. Any additional enhancements available on that BBS, such as data compression, will become apparent after log on.

Transfer protocols such as Xmodem, Ymodem, and Zmodem are used to ensure file integrity during transfer. The protocols listed above are available on all the above BBS's. ProComm supports all common protocols including these. Most of these BBS's will recommend Zmodem in order to speed up down loads.

[PAGES 1-133 THROUGH 1-138 RESERVED]

CHAPTER 4. GENERAL DIRECTION, GUIDANCE, AND PROCEDURES

SECTION 6. THE GENERAL PROCESS FOR APPROVAL OR ACCEPTANCE

205. GENERAL.

A. The general process of approval or acceptance of certain operations, programs, documents, procedures, methods, or systems is an orderly method used by Flight Standards inspectors to ensure that such items meet regulatory standards and provide for safe operating practices. It is a modular, generic process that can be applied to many types of approval or acceptance tasks. The process consists of five distinct yet related phases and can result in approving or not approving, accepting or not accepting an operator's proposal. It is important for an inspector to understand that the process described in this section is not all-inclusive, but rather a tool to be used with good judgment in conducting day-to-day duties and responsibilities.

B. This section provides direction and guidance for understanding and applying this process. The logic diagram (figure 1.4.6.1. TBD) should be used for reference while reviewing the process.

> *FYI: It is essential for the inspector to understand that this process may result in a decision to not approve or not accept an operator's proposal. The process described is used to assist in making either positive or negative determinations.*

C. This general process applies to many tasks described throughout this handbook. Each chapter or section describing an approval or acceptance task supplements the general process by outlining specific task requirements for each phase. For example, the specific items or actions required of the Federal Aviation Administration (FAA) and the operator for each phase of the process concerning proving tests are delineated in volume 3, chapter 9. The five phases of the operational approval or acceptance process are as follows:

207. PHASE ONE. The first phase starts when an operator, a person, an aviation interest, or the FAA inquires about or states a need for a change in some aspect of an aviation activity. Phase one is initiated by the following two possible actions:

A. A person or operator conveys to the FAA a need that is related to its operation. This "need" may be a requirement for FAA approval or acceptance. For example, an operator may need, want, or be required to have a minimum equipment list (MEL) change. The operator initiates the process by inquiring about the correct procedures to receive approval from the FAA for the change. During initial inquiries, it is important for the FAA and the operator to become familiar with the subject matter. If, for example, an operator requests an operational approval, the inspector must take the following actions:

- Become thoroughly familiar with existing FAA policy and approval requirements
- Become familiar with the appropriate technical material
- Accurately assess the character and scope of the proposal
- Determine if a demonstration is required
- Determine the need for any coordination requirements
- Ensure that the operator has a clear understanding of the minimum requirements that constitute an acceptable submission
- Determine the date the operator intends to implement the proposal

B. Phase one may also begin when the FAA conveys to the operator or person a requirement related to its operation which must be approved or accepted. For example, a principal inspector may require an operator to publish, in the company aircraft operating manual, information on low speed buffet. The operator must research and understand that subject area before submitting a proposal to the FAA for evaluation. The principal inspector should act in an advisory capacity to the operator during the preparation of the submission. Such advice may include the following:

- The necessity for a deviation, authorization, waiver, or exemption
- The necessity for required demonstrations
- Clarification of Federal Aviation Regulations (FAR) or handbook information
- Sources of specific technical information
- Acceptable standards for submission

C. The common element, regardless of whether an action is initiated by an operator or the FAA, is the effort expended by the operator.

NOTE: It is essential (particularly in phase one) for the operator to have a clear understanding that, although the inspector may provide advice and guidance to the company, the development of the final product submitted to the FAA is solely the responsibility of the operator.

D. In phase one, the inspector must ensure that the operator clearly understands the form, content, and documents required for the submission to be acceptable to the FAA. The operator must be informed of the need and benefits of submitting required documents as early as possible and of its responsibility to advise the FAA, in a timely manner, of any significant changes in the proposal. Phase one of the process is illustrated as follows:

- Operator makes inquiry or request to FAA

  - OR -

- FAA requires operator to take an action
- FAA and operator develop understanding of subject area
- Operator understands form, content, and documents required for acceptable submission

209. PHASE TWO. Phase two begins when the operator formally submits a proposal for FAA evaluation. The request may be submitted in a variety of ways. The inspector's first action, in phase two, is to review the operator's submission to ensure that the proposal is clearly defined, and the documentation specified in phase one has been provided. The required information must be complete and detailed enough to permit a thorough evaluation of the operator's capability and competence to fully satisfy the applicable regulations, national policy, and safe operating practices. Phase two does not include a detailed operational and technical evaluation or analysis of the submitted information (see phase three). However, in phase two the submission must be examined in sufficient detail to assess the completeness of the required information. If the operator's submission is not complete or the quality is obviously unacceptable, it must be immediately returned with an explanation of the deficiencies, before any further review and evaluation is conducted. Normally, unacceptable submissions should be returned with a written explanation of the reasons for its return. In many complex cases, a meeting with the operator and its key personnel may be necessary to resolve issues and agree on a mutually acceptable solution. If mutual agreements cannot be reached, the inspector must terminate the meeting, inform the operator that the submission is unacceptable, and return the submission. If all parties are able to reach agreement on measures to correct omissions or deficiencies, and the principal inspectors (operations, airworthiness, and avionics, if applicable) determine that the submission is acceptable, the operator will be so informed, and phase three begins. Phase two of the process is illustrated as follows:

- Operator submits proposal
- FAA makes initial examination of the documents for completeness with respect to requirements established in phase one
- FAA returns submitted proposal

  - OR -

- FAA accepts submitted proposal

NOTE: It is important for the inspector involved to keep the operator advised of the status of its proposal. If the inspector takes no other action, or if the submission is deficient and not returned in a timely manner, the applicant may assume that the FAA has tacitly accepted the submission and is continuing with the process. Timeliness of action depends on the situation as well as inspector judgement and is discussed in pertinent sections of this handbook.

211. PHASE THREE.

A. Phase three is the FAA's detailed analysis, review, and evaluation of the operator's proposal. These actions may take place entirely within a field office, at the site of operations, or at both facilities. In phase three the FAA evaluation is focused on the form, content, and technical quality of the submitted proposal to determine that the information in the proposal meets the following criteria:

- Is not contrary to any applicable FAR
- Is not contrary to the direction provided in this handbook or other safety-related documents
- Provides for safe operating practices

B. Criteria for evaluating the formal submission is found in the applicable chapters of this handbook.

The inspector must ensure that the documents adequately establish the operator's capability and competence to safely conduct operations in accordance with the submitted proposal.

C. During phase three the FAA inspector must, in a timely manner, address any deficiencies in the submitted material before proceeding to subsequent phases. Discussion with the operator may be sufficient to resolve certain discrepancies or questions, or to obtain additional information. It may be necessary to return certain sections of the submission to the operator for specific changes. However, when an inspector determines that, for specific reasons, the material is grossly deficient or unacceptable, the inspector must return the entire submission to the operator with an appropriate explanation, and immediately terminate this phase. If the results of the evaluation are acceptable and a demonstration requirement exists, the inspector may need to grant some form of conditional, initial, or provisional approval to the proposal before continuing with the process.

D. An important aspect of phase three is for FAA inspectors to begin planning the conduct of phase four. While evaluating the operator's formal submission, inspectors should begin to formulate plans to observe and evaluate the operator's ability to perform. These plans must be finalized before the actual demonstrations. Phase three is illustrated as follows:

- FAA evaluates the formal submission for compliance with FAR, compliance with the direction provided in this handbook, other safety-related documents and safe operating practices
- When results of FAA evaluation are unsatisfactory, return submission to the operator for correction and/or terminate the phase
- Begin planning phase four (if required)
- When results of FAA evaluation are satisfactory, proceed with phase four (if demonstration required) and if appropriate, grant conditional approval or acceptance

  - OR -

- Proceed to phase five if demonstration not required

213. PHASE FOUR.

A. In phase four the FAA finalizes plans to observe and evaluate the operator's demonstration of its ability to perform in accordance with the procedures, guidelines, and parameters described in the formal proposal. Phase four is an operational evaluation of the operator's ability to function in accordance with the proposal evaluated in phase three. Usually, these demonstrations are required by regulation, and some examples include the following:

- Training programs
- Proving tests
- Emergency evacuation demonstration
- All-weather terminal operations
- Air navigation operations

B. Criteria and procedures for evaluating an operator's demonstrated ability are described in applicable chapters of this handbook. The inspector must plan for the conduct and observation of the demonstration to include such factors as participants, evaluation criteria, and sequence of events. During these demonstrations it is normal for minor discrepancies to occur. Discrepancies can often be resolved during the demonstration by obtaining commitments from responsible company officials. The inspector responsible for overseeing a demonstration must evaluate each discrepancy in terms of its overall impact on the operator's ability and competence to conduct the proposed operation. The inspector must stop the demonstration in phase four when gross deficiencies or unacceptable levels of performance are observed. The inspector must identify the phase of the general process for approval or acceptance to which the applicant must return, or decide to terminate the process entirely when it is clear that continuation would not result in approval or acceptance. For example, if an emergency evacuation demonstration is unsatisfactory due to equipment failure (a slide fails to inflate) it may be appropriate to require the operator to reenter the process at phase four and conduct another demonstration. If the demonstration is unacceptable because crewmembers were unable to perform their assigned duties, it may be appropriate to advise the operator that the process is terminated pending review and evaluation of the operator's emergency training program, and that the operator may need to reenter the process at phase two (that is, submit a new proposal).

C. If the FAA evaluation of the operator's demonstrated ability is acceptable, the process continues. Phase four of the process is illustrated as follows:

- FAA plans for the conduct and observation of the demonstration
- Operator demonstrates ability
- Demonstration unsatisfactory

  - OR -

- Demonstration satisfactory

NOTE: An operator shall not, under any circumstances, be authorized or otherwise approved to conduct any particular operation until all airworthiness and operations requirements are met and the operator is clearly capable of conducting a safe operation in compliance with FAA regulations and safe operating practices.

215. PHASE FIVE.

A. In phase five the FAA approves or accepts the operator's proposal. If the proposal is not approved or accepted, the operator is notified in phase three or four.

B. Approval is granted by letter, by a stamp of approval, by the issuance of operations specifications, or by some other official means of conveying approval. Each section of this handbook that discusses a requirement for approval provides specific guidance concerning approval procedures and documentation. The following are examples of approvals granted by the FAA:

- All-weather terminal operations
- Training programs
- MEL
- Cockpit checklist
- Company Aircraft Operating Manual (limitations, performance, and operating procedures)
- Air navigation operations

C. Other proposals, submissions, or requests not requiring specific FAA approval but required to be submitted to the FAA are items that are presented for acceptance. Acceptance of an operator's proposal may be accomplished by various means, including a letter, verbal acceptance, or by taking no action, which indicates there is no FAA objection to the proposal. Methods and procedures used to accept operator proposals or submissions, when appropriate, are discussed in the applicable chapters of this handbook. Phase five is illustrated as follows:

- FAA approves submission

  - OR -

- FAA accepts submission

FYI: Sometimes FAA approval or acceptance of an operator's proposal may be conditional in nature. For example, a training program may be initially approved provided that the flight simulator to be used in that program receives approval from the National Simulator Evaluation Team.

217. SUMMARY OF PROCESS. The general operational approval or acceptance process, as described, is referenced throughout this handbook (in terms of the five phases) with the specific task requirements for each applicable job function. It is important for the inspector to understand the modular concepts inherent in the process, the overall interrelationship of the phases, and that this general process is not all-inclusive, but a tool to be used in the inspector's day-to-day duties and responsibilities. The logic diagram in figure 1.4.6.1. (TBD) is intended to clarify this general process.

218.–222. RESERVED.

[PAGES 1-143 THROUGH 1-150 RESERVED]

VOLUME 2. TABLE OF CONTENTS

AIR OPERATOR CERTIFICATION

Page

CHAPTER 1. GENERAL

Section 1. General Information

1. Purpose 2-1
3. The Certification Process 2-1
5. Chapter 3, Selected Practices 2-2
7. Chapter 4, Foreign Air Carriers 2-2
8.-12. Reserved 2-2

Section 2. Types of Certificates and Applicable Rules

13. Types of Certificates 2-24
15. Common Carriage vs. Private Carriage 2-25
17. Air Transportation and Air Carriers 2-25
19. Economic Authority-DOT Certificates and Exemptions 2-25
21. Regulatory Requirements 2-27
22.-26. Reserved 2-28

Section 3. Assignment of Responsibilities for Part 121 and Part 135 Certificates and Certification Projects

27. General 2-36
29. Principal Base of Operations 2-36
31. Factors to be Considered When Designating a Principal Base of Operations 2-36
33. Split Main Operations and Main Maintenance Base Locations 2-36
35. Regional Coordination for the Assignment or Reassignment of Certificate Holding Responsibilities 2-37
36.-40. Reserved 2-38

Section 4. Obtaining Certificate Numbers and Certificate Number Construction

41. Obtaining Precertification Numbers and Final Certificate Numbers 2-44
43. Certificate Number Construction 2-44
45. Elements of a Certificate Number 2-44
47. Precertification Number Construction 2-46
49. Restrictions and Provisions for Certificate Number Construction 2-46
50.-54. Reserved 2-47

CHAPTER 2. THE CERTIFICATION PROCESS—PART 121 AND PART 135

Section 1. Preapplication Phase

55. General 2-53
57. Initial Inquiries or Requests 2-53
59. FAA Form 8400-6, "Preapplication Statement of Intent" (PASI) 2-54
61. District Office Review of PASI 2-54
63. Regional Office Actions with the PASI 2-54
65. Assignment of Certification Team 2-55
67. Responsibilities of CPM and the Certification Team 2-55
69. Preapplication Meeting 2-55
71. Instructions to the Applicant on the Formal Application 2-56

VOLUME 2. TABLE OF CONTENTS—Continued

Page

73. Application Attachments 2-57
75. Conclusion of Preapplication Meeting 2-60
77. Termination of the Preapplication Process 2-60
78.-82. Reserved 2-60

Section 2. Formal Application Phase

83. Receipt of Formal Application 2-73
85. Initial Review of the Formal Application 2-73
87. Schedule of Events Attachment 2-73
89. Company General Manual Attachments 2-74
91. Initial Company Training Curriculum Attachments 2-74
93. Management Qualifications Attachments (Resumes) 2-74
95. Documents of Purchase, Contracts, Leases, and Letters of Intent Attachment 2-74
97. Initial Compliance Statement Attachment 2-74
99. Initial Determination of Formal Application Acceptability 2-74
101. The Formal Application Meeting 2-75
103. Final Determination of Formal Application Acceptability 2-76
105. Rejection of Formal Application 2-76
106.-110. Reserved 2-77

Section 3. Document Compliance Phase

111. General 2-85
113. Planning the Document Compliance Phase 2-85
115. Review of Applicant's Submissions 2-85
117. The Final Compliance Statement 2-86
119. Document Deficiencies 2-86
120.-124. Reserved 2-86

Section 4. Demonstration and Inspection Phase

125. General 2-91
127. Observations and Monitoring of Events 2-91
129. Demonstration and Inspection Deficiencies 2-91
130.-134. Reserved 2-92

Section 5. Certification Phase

135. General 2-97
137. Preparation of Federal Aviation Administration (FAA) Certificates 2-97
139. Issuance of Operations Specifications and Certificate 2-98
141. Certification Report 2-98
143. Certification Report Distribution 2-99
144.-148. Reserved 2-99

CHAPTER 3. SELECTED PRACTICES

Section 1. Air Carrier Mergers, Bankruptcies, and Acquisition of Air Carrier Operational Assets

149. General 2-109
151. The Process for Handling Bankruptcies, Mergers, and Acquisitions 2-110
153. Phase One 2-110
155. Phase Two 2-112
157. Phases Three, Four, and Five 2-113
159. Indepth Inspection Considerations 2-113
160.-164. Reserved 2-113

VOLUME 2. TABLE OF CONTENTS—Continued

Page

Section 2. Single Pilot, Single Pilot-In-Command (PIC), and Basic Part 135 Operators

165. General 2-123
167. Definitions 2-123
169. Certification Process 2-123
171. Special Airworthiness Considerations 2-123
173. Certification Process Differences for Single Pilot and Single PIC Operators 2-124
175. Concept of a Basic Part 135 Operator 2-125
177. Procedure for Approving Deviation from Management Experience 2-126
179. Deviations for Basic FAR Part 135 Operators 2-127
181. Delegation of Authority to Approve Deviations 2-127
183. Limitation of Authority to Approve Deviations 2-127
185. Certification Process Differences for Basic FAR Part 135 Operators 2-128
186.-200. Reserved 2-129

Section 3. Major Changes in Operating Authority

201. Purpose 2-139
202. Application and Approval Process 2-140

Section 4. Amendment, Surrender, Suspension, Revocation, and Replacement of Operating Certificates

203. General 2-141
205. Amendment of a Certificate 2-141
207. Surrender of a Certificate 2-143
209. Suspension of a Certificate 2-143
211. Revocation of a Certificate 2-143
213. Replacement of a Lost or Destroyed Certificate 2-144
215. Adverse Actions 2-144
216. Reserved 2-144

Section 5. Hazardous Materials or Dangerous Goods

217. General 2-147
219. Hazardous Material Information Requirements for Operators Not Accepting Hazardous Materials or Dangerous Goods 2-147
221. Responsibility for Approval, Surveillance, and Enforcement of Hazardous Materials or Dangerous Goods Programs 2-147
223. Procedures for Approval of Hazardous Materials or Dangerous Goods Training Programs 2-147
225. Procedures for Acceptance of Hazardous Materials or Dangerous Goods Manuals 2-148
227. Required Hazardous Materials or Dangerous Goods Information 2-148
229. Coordination 2-149
231. Exemptions 2-149
233. Violations and Investigations 2-150
235. Sources of Information 2-150
236. Reserved 2-151

Section 6. International Civil Aviation Organization (ICAO) Company Designators and Radiotelephony Designators (Call Signs)

237. General 2-157
239. Applicability 2-158
241. Procedures for Assignment of Designators 2-158
243. Effective Date and Publication 2-158
245. Changes in Company Status and Cancellation 2-159

VOLUME 2. TABLE OF CONTENTS—Continued

Page

247. Other Information Sources 2-159
248.-254. Reserved 2-159

CHAPTER 4. FOREIGN AIR CARRIERS AND FOREIGN OPERATORS OF U.S.-REGISTERED AIRCRAFT ENGAGED IN COMMON CARRIAGE

Section 1. Background and FAA Authority

255. The Chicago Convention and ICAO 2-161
257. Articles of the Convention 2-161
259. International Standards and Recommended Practices 2-161
261. Definitions 2-161
263. DOT's Authority and Role 2-161
265. FAA's Authority and Role 2-162
267. Relationships with Foreign Nationals 2-162
269. Coordination and Communications 2-162
271. Consumer Questions 2-162
272.-276. Reserved 2-163

Section 2. Operations Specifications

277. General 2-172
279. Responsible FAA Field Office 2-172
281. Application 2-172
283. Processing Applications 2-172
285. Issuance of Operations Specifications 2-173
287. Amendments 2-173
288.-292. Reserved 2-173

Section 3. Compliance, Surveillance, and Enforcement

293. General 2-183
295. Compliance 2-183
297. Surveillance 2-183
299. Safety Enforcement 2-185
301. Accident, Incident, Near Midair, and Complaint Investigation 2-185
302.-306. Reserved 2-185

Section 4. Leasing Agreements and Interchange Arrangements

307. General 2-193
309. Wet Lease 2-193
311. Dry Lease 2-193
313. Interchange Agreement 2-194
314.-318. Reserved 2-194

Section 5. Maintenance and Minimum Equipment Lists for U.S.-Registered Aircraft

319. General 2-203
321. Approval 2-203
322.-326. Reserved 2-203

Section 6. Special Purpose Flight Crewmember Certificates

327. Applicability 2-209
329. Forms, Issuance, and Disposition 2-209
331. Termination of Special Purpose Flight Crewmember Certificates 2-209
333. Surrender of Special Purpose Flight Crewmember Certificates 2-210
334.-338. Reserved 2-210

VOLUME 2. TABLE OF CONTENTS—Continued

Page

Section 7. Recordkeeping

339. General 2-217
341. Foreign Air Carrier With FAA Issued Part 129 Operations Specifications 2-217
343. Foreign Person Operating A U.S.-Registered Aircraft Outside the United States 2-217
344.-352. Reserved 2-217

CHAPTER 2. THE CERTIFICATION PROCESS—PART 121 AND PART 135

SECTION 3. DOCUMENT COMPLIANCE PHASE

111. GENERAL.

A. The document compliance phase is that part of the certification process when the applicant's manuals and other documents are reviewed and either accepted, approved, or rejected, as appropriate. (These documents may include paper representation of data intended for display on the airplane; for example, electronic checklists or approved flight manuals. Guidance on the use of electronic checklists is provided in Advisory Circular (AC) 120-ECL, "Operational Use and Modification of Electronic Checklists." Operators' use of electronic checklists should be consistent with the provisions of AC 120-ECL.) The conduct of this phase is primarily accomplished in the district office by members of the certification team. Each submission by the applicant shall be given an in-depth review to ensure that it complies with applicable regulations and conforms to safe operating practices.

B. It should be noted that to ensure clarity, the document compliance phase and the demonstration and inspection phase are discussed individually in this chapter. In practice, however, these two phases overlap. For example, when a training program has been initially approved, the operator may begin its training while other manuals and program elements are being reviewed. As another example, review of the final compliance statement is the last element of the document compliance phase, mainly because it is accomplished within the physical confines of the district office. However, the final compliance statement is normally reviewed and accepted just before the aircraft proving tests.

113. PLANNING THE DOCUMENT COMPLIANCE PHASE.

A. An important responsibility of the certification project manager (CPM) is to organize the certification team's efforts of reviewing the applicant's manuals and other documents. Two key elements useful in planning activities in the document compliance phase are the Schedule of Events and the initial compliance statement. The Schedule of Events determines what will be examined and when. The previously agreed to Schedule of Events will determine the priority of items to be reviewed, when they should be reviewed, and any additional inspector support or other Federal Aviation Administration (FAA) resources that will be needed beyond the composition of the basic certification team. For example, the services of an inspector who is type rated for a specific aircraft may be needed to evaluate a proposed aircraft checklist.

B. The plan for review should ensure that each of the required manuals or documents submitted by the applicant will be reviewed in accordance with procedures and criteria outlined in other volumes of this handbook. The initial compliance statement directs the inspector to the location in the applicant's manuals where a compliance procedure is described. The Certification Job Aid has specific references to direction and guidance on specific subject matter published in this handbook.

115. REVIEW OF APPLICANT'S SUBMISSIONS. During this phase, members of the certification team evaluate and approve or accept the applicant's manuals and any other required documents. Review of the applicant's submissions should be accomplished by simultaneous reference to the Federal Aviation Regulations (FAR), any completed portions of the initial compliance statement, and the appropriate manual or document. The following are examples of typical submissions from applicants during the document compliance phase. This list is not all-inclusive, and certain items may not be applicable to a particular type of operation.

- Management personnel resumes outlining proposed management qualifications and compliance histories
- General operations manual (GOM)
- General maintenance manuals (GMM) (This manual may be combined with the GOM for certain FAR Part 135 operators.)
- Continuous airworthiness maintenance program/manuals
- Weight and balance procedures
- Training program/manual

- FAA-approved airplane/rotorcraft flight manual (AFM/RFM)
- Company aircraft operations manual (This is not required if an operator elects to use the manufacturer's approved flight manual.)
- Minimum equipment list (MEL)
- Configuration deviation list (CDL)
- Cockpit checklist
- Passenger briefing card
- Noise and environmental assessments
- Airport runway analysis (This is required for transport category aircraft operations.)
- Deviation requests
- Hazardous materials (HAZMAT)/security program
- Flight attendant (F/A) manual
- Dispatch/flight-following/flight-locating procedures
- Operations specifications (including operations, maintenance, and avionics)
- Maintenance reliability program (optional for 10 or more passengers)
- Continuous analysis and surveillance system (required only for 10 or more passengers under FAR Part 135)
- Proving test plan
- Emergency evacuation demonstration plan
- Final compliance statement

117. THE FINAL COMPLIANCE STATEMENT.

A. The final compliance statement serves the following two purposes:

(1) It ensures that the applicant has adequately addressed all regulatory requirements applicable to the proposed operation.

(2) It aids the certification team in determining where the regulatory requirements have been addressed in the applicant's manuals, programs, and procedures. In evaluating the applicant's final compliance statement, the certification team may find it helpful to compare (in a side-by-side manner) the FAR, the applicant's manuals, and the final compliance statement. The final compliance statement documents how the applicant intends to comply with each applicable regulation. It either directs the inspector's attention to specific company manuals or documents or provides a statement which describes how the applicant intends to comply with a specific regulatory requirement.

B. If the applicant's final compliance statement does not serve the preceding purposes, it shall be returned with a letter outlining the deficient areas. Representative en route proving tests must not be conducted until the certification team is satisfied, through its review of the final compliance statement, that all regulatory requirements have been adequately addressed. The applicant's methods of compliance will be evaluated throughout the demonstration and inspection phase.

119. DOCUMENT DEFICIENCIES.

A. If the inspector's review reveals deficiencies in the applicant's submissions, the CPM should return the manual or document to the applicant with a letter outlining the deficient areas. The team should be ready to offer suggestions on how to improve the product, but avoid "writing" the applicant's manual. The certification team should remember that it is the applicant's responsibility to develop manuals and procedures that ensure safe operating practices and compliance with the rules.

B. If, during the document review, the applicant does not meet the Schedule of Events, or its submissions are not of sufficient quality to warrant further review, the CPM shall schedule a meeting with the applicant to review all the deficiencies in detail. If appropriate, the CPM will advise the applicant of either the impracticability of continuing the certification project due to the unacceptability of the submissions, or agree to a new, modified Schedule of Events and reenter the document compliance phase at the appropriate point.

120.–124. RESERVED.

[PAGES 2-87 THROUGH 2-90 RESERVED]

CHAPTER 2. THE CERTIFICATION PROCESS—PART 121 AND PART 135

SECTION 4. DEMONSTRATION AND INSPECTION PHASE

125. GENERAL. In this phase, the certification team determines that the applicant's proposed procedures and programs for training and directing personnel in the performance of their duties are effective. In this phase, the emphasis is on compliance with regulations and safe operating practices. As previously mentioned, certain segments of the document compliance phase often occur simultaneously with certain events in the demonstration and inspection phase. For example, inspectors may be observing pilot training at the applicant's facilities (demonstration and inspection phase) while other certification team members are approving and/or accepting maintenance manuals in the district office (document compliance phase).

127. OBSERVATIONS AND MONITORING OF EVENTS. Through observation and other forms of on-site evaluation during the demonstration and inspection phase, members of the certificating team observe and monitor many types of applicant activities. The manner in which the applicant is to be evaluated while conducting different segments of this phase is outlined in various sections of this handbook. Specific handbook references for each activity or event are referenced on the certification job aid. The following list of activities or events are representative of events that occur in the demonstration and inspection phase. This list is not all-inclusive, and certain items may not be applicable to a particular type of operator:

- Conduct of training programs (classroom, flight simulators, and aircraft training)
- Airmen testing and certification (airmen, crewmembers, and dispatchers, as applicable)
- Station facilities (equipment, procedures, and personnel)
- Recordkeeping procedures (documentation of training, flight and duty times, and flight papers)
- Flight control (dispatch, flight-following, or flight-locating capabilities)
- Approved maintenance program procedures
- Maintenance activities (facilities, personnel, technical information, and spare parts)
- Aircraft (conformity inspection and aircraft maintenance records)
- Minimum equipment lists (MEL) and configuration deviation lists (CDL) (compliance with FAA-approved operations manual/flight manual maintenance procedures, if applicable)
- Weight and balance control, if applicable (procedures, accuracy, document control)
- Emergency evacuation demonstration, not applicable to Federal Aviation Regulations (FAR) Part 135, (aborted takeoff demonstration and ditching demonstration, if applicable)
- Aircraft proving tests (ability of applicant to operate independently, safely, and in compliance with the applicable FAR)

129. DEMONSTRATION AND INSPECTION DEFICIENCIES.

A. If, at any time during the demonstration and inspection phase, the applicant does not meet the Schedule of Events, or the applicant's conduct of various activities (such as training, emergency evacuation) or certain items (such as MEL, recordkeeping procedures) proves to be deficient, appropriate corrective action must be taken. Required and recommended corrective measures for addressing specific types of deficiencies are in the appropriate subject matter discussions in other chapters of this handbook. The certification project manager (CPM) should schedule meetings with the applicant, as necessary, to review all deficiencies in detail.

B. If appropriate, the CPM shall advise the applicant of the impracticality of continuing the certification project, due to the extent of deficiencies, or agree to a new, modified Schedule of Events and reenter the demonstration and inspection phase or the document compliance phase, as appropriate.

130.–134. RESERVED.

[PAGES 2-93 THROUGH 2-96 RESERVED]

CHAPTER 2. THE CERTIFICATION PROCESS—PART 121 AND PART 135

SECTION 5. CERTIFICATION PHASE

135. GENERAL. The certificate and approved operations specifications are issued to the applicant after all significant unsatisfactory items have been corrected. This action completes the certification process. The applicant shall not be certificated under any circumstance until the certification project manager (CPM) has determined that the applicant is fully capable of fulfilling its responsibilities as charged by Title 49, United States Code (U.S.C.) (formerly the Federal Aviation Act (FA Act) of 1958) and that the applicant will comply with the Federal Aviation Regulations (FAR) in an appropriate manner. Before issuance, insignificant or noncritical items that need further resolution should be thoroughly discussed with the applicant, and agreements concerning corrective action should be obtained in writing.

137. PREPARATION OF FEDERAL AVIATION ADMINISTRATION (FAA) CERTIFICATES. FAA Form 8430-18, "Air Carrier Certificate," shall be used for an air carrier certificate. FAA Form 8430-21, "Operating Certificate," shall be used for an operating certificate (see figures 2.2.5.1., 2.2.5.2., and 2.2.5.3.). The following information must be imprinted or typed on the appropriate form when the certificate is prepared for issuance:

A. The Certificate Holder's Name. The certificate holder's full and official name shall be entered directly below the words "This certifies that . . . ." Other names, such as "doing business as" (DBA) names, shall not be printed on a certificate.

NOTE: This explains the present variance between the FAR and FAA Order 8400.10 concerning policy regarding the placement of business names (and/or DBA's) on FAR Part 135 air carrier certificates. Although the deletion of DBA's from air carrier certificates was considered to be an administrative change via the 8400.10 handbook (Change 2), it would be REQUIRED upon the adoption of proposed FAR Part 119. FAR Part 119 prescribes the content of air carrier certificates and operations specifications. Some Flight Standards District Offices (FSDO) have received requests by FAR Part 135 air carrier certificate holders to place business names on operating certificates. These requests are consistent with FAR Part 135. FAR § 135.11, "Application and issue of certificate and operations specifications," states the following: "An applicant who meets the requirements of this part is entitled to—(1) An ATCO [air taxi/commercial operator] operating certificate containing all business names under which the certificate holder may conduct operations . . . ." FAR § 135.29, "Use of business names," states, in pertinent part, the following: "No certificate holder may operate an aircraft under [FAR Part 135] under a business name that is not on the certificate holder's operating certificate." Until the present regulations are superseded or modified, inspectors shall honor an FAR Part 135 air carrier's request to list DBA's on the air carrier certificate.

B. The Certificate Holder's Address. The physical location address of the certificate holder's principal base of operations shall be entered directly below the certificate holder's name. A post office box address is not acceptable unless it also reflects the physical location of the principal base of operations. The address on the certificate must be a physical location and may or may not be the same as the mailing address.

C. The Certification Statement of Authority. The pre-printed certification statement of authority on the Air Carrier Certificate (FAA Form 8430-18) shall not be modified (figure 2.2.5.1.). However, the pre-printed certification statement of authority on the Operating Certificate (FAA Form 8430-21) must be completed by imprinting or typing the following phrases in the spaces provided to complete the certificate, as appropriate:

(1) Operating Certificate for Intrastate Common Carriage (Figure 2.2.5.2.).

(a) In the first space, enter "Intrastate Common Carriage Operations."

(b) In the second space, enter "and the terms, conditions, and limitations in the approved operations specifications."

(c) In the third space, enter "indefinitely."

(2) Operating Certificate for Private Carriage (Figure 2.2.5.3.).

(a) In the first space, enter "Private Carriage Operations."

(b) In the second space, enter "and the terms, conditions, and limitations in the approved operations specifications."

(c) In the third space, enter "indefinitely."

D. The Assigned Certificate Number. The final certificate number will be obtained from AFS-620 in accordance with paragraph 41, and will be imprinted or typed in the space provided on the form.

E. The Effective Date of Certificate. The date to be entered in the space provided shall be the date of issuance. If a certificate is to be changed due to an address change or a change of the certificate-holding district office (CHDO), the date of original issuance shall be retained on the changed certificate. A change of name for the air operator or a change in the certification statement of authority has the effect of a new certification; therefore, a new certificate and certificate number shall be issued. For this situation, the issuance date of the new certificate will be entered in the space provided.

F. The Certificate-Holding District Office's Designator. The four-character, alpha-numeric designator of the CHDO shall be imprinted or typed into the "issued at" space of the form (for example, EA18).

G. The Signature Block. Air carrier certificates issued to air operators complying with FAR Part 121, or to air operators complying with FAR Part 135 commuter rules, shall be signed by the regional office manager or a designated member of the manager's staff. All other air operator certificates shall be signed by the CHDO manager.

H. The Signature, Title, and Region/Office Block. The full title of the person signing the certificate shall be entered in the space provided. When the Flight Standards division manager signs the certificate, the full name of the region shall be entered in the "region/office" space (for example, Southwest Region). When the district office manager signs the certificate, the full name of the region and the FSDO acronym and number shall be entered in the "region/office" space (for example, Southwest Region, FSDO 18).

139. ISSUANCE OF OPERATIONS SPECIFICATIONS AND CERTIFICATE.

A. When it is determined that the applicant has met, or will soon meet all regulatory requirements, the appropriate certificate and operations specifications will be prepared. These documents should normally be prepared during the demonstration and inspection phase. The operations specifications will be prepared in accordance with the procedures in volume 3, chapter 1.

B. An applicant for an air carrier certificate will not, for any reason, be issued operations specifications or a certificate until the applicant has presented a copy of its Department of Transportation (DOT) economic authority (either a certificate or registration) to the CPM.

C. Before issuance, the operations specifications will be signed by the applicant and the appropriate principal inspectors. The original certificate and operations specifications will then be given to the new certificate holder.

141. CERTIFICATION REPORT. When the new operator is certificated, the CPM is responsible for assembling a certification report. This report must be signed by the CPM and will include the name and title of each team member who assisted in the certification project. The report shall consist of 10 sections, A through J, as follows:

A. The Preapplication Statement of Intent (PASI).

B. The Certification Job Aid.

C. The Formal Application Letter.

D. The Schedule of Events.

E. The Final Compliance Statement.

F. The Proving Test Evaluation Report (if applicable).

G. The Emergency Evacuation Demonstration Report (if applicable).

H. A copy of the Operations Specifications issued.

I. A copy of the certificate issued.

J. A summary of major difficulties experienced during the certification process and/or any recommendations that may enhance the process must be noted by phase and specialty. Summaries of major difficulties and/or recommendations should be arranged as follows:

(1) Preapplication Phase (Operations, Maintenance, Avionics). Include summaries of difficulties or recommendations by specialty.

(2) Formal Application Phase (Operations, Maintenance, Avionics). Include summaries of difficulties or recommendations by specialty.

(3) Document Compliance Phase (Operations, Maintenance, Avionics). Include summaries of difficulties or recommendations by specialty.

(4) Demonstration and Inspection Phase (Operations, Maintenance, Avionics). Include summaries of difficulties or recommendations by specialty.

143. CERTIFICATION REPORT DISTRIBUTION.

A. Two copies of the certification report for a FAR Part 135 Commuter Air Carrier or a FAR Part 121 Air Carrier shall be forwarded to the regional office for review and, if appropriate, action. The regional office shall forward one copy of these reports to AFS-1.

B. One copy of the certification report for a FAR Part 135 on-demand air carrier or a FAR Part 121 or 135 air operator issued an Operating Certificate shall be forwarded to the regional office for review and, if appropriate, action.

C. The district office shall retain the original of the certification report as long as the certificate holder remains active.

144.–148. RESERVED.

FIGURE 2.2.5.1.
AIR CARRIER CERTIFICATE

U.S. Department
of Transportation

**Federal Aviation
Administration**

Air Carrier Certificate

This certifies that

has met the requirements of the Federal Aviation Act of 1958, as amended, and the rules, regulations, and standards prescribed thereunder for the issuance of this certificate and is hereby authorized to operate as an air carrier and conduct common carriage operations in accordance with said Act and the rules, regulations, and standards prescribed thereunder and the terms, conditions, and limitations contained in the approved operations specifications.

This certificate is not transferable and, unless sooner surrendered, suspended, or revoked, shall continue in effect indefinitely.

By Direction of the Administrator.

Certificate number _____

Effective date _____

Issued at _____

_____
(Signature)

_____
(Title)

_____
(Region/Office)

FAA Form 8430-18 (6-87)

CHAPTER 4. FOREIGN AIR CARRIERS AND FOREIGN OPERATORS OF U.S.-REGISTERED AIRCRAFT ENGAGED IN COMMON CARRIAGE

SECTION 3. COMPLIANCE, SURVEILLANCE, AND ENFORCEMENT

293. GENERAL.

A. Article 16 of the Chicago Convention states that the appropriate authorities of each state have the right, without unreasonable delay, to search foreign civil aircraft on landing or departure, and to inspect the certificates and other documents prescribed by the Convention. Sections 40113 and 46101(a)(2) of Title 49, United States Code (U.S.C.) (formerly §§ 313 and 1002 of the Federal Aviation Act (FA Act) of 1958) empower the Administrator to conduct such investigations considered necessary to carry out the provisions of the U.S.C.

B. Section 41703 of Title 49, U.S.C. (formerly § 1108(b) of the FA Act) states that foreign civil aircraft may be navigated in the United States (U.S.) by airmen holding appropriate certificates issued by the state of registry of the aircraft and only if such navigation is authorized by permit, order, or regulation issued by the Department of Transportation (DOT), and in accordance with the terms, conditions, and limitations thereof.

C. Permits issued by DOT under § 41302 of Title 49, U.S.C. (formerly § 402 of the FA Act) to foreign air carriers contain specific terms, conditions, and limitations. Among these conditions are requirements that each permit holder comply with the following:

- Operational safety requirements at least equivalent to Annex 6 of the Convention
- All applicable orders and regulations of other U.S. agencies and courts, and with all applicable laws of the U.S.

D. Section 40109 of Title 49, U.S.C. (formerly § 416(b) of the FA Act) exemptions issued by DOT to foreign air carriers conducting short-term exemption operations (normally no more than 10 flights into the U.S.) also require compliance with subparagraph 293C.

295. COMPLIANCE. Each foreign air carrier operating within the U.S. must comply with each applicable requirement in the Federal Aviation Regulations (FAR) and in accordance with its operations specifications. Additionally, each person operating a U.S.-registered aircraft outside the U.S. must comply with FAR § 91.703 and, if engaged in common carriage operations, FAR § 129.14.

297. SURVEILLANCE.

A. Purpose. Aviation safety inspectors (ASI) shall conduct surveillance of each foreign air carrier and its aircraft and operations. The surveillance task is to determine compliance with the FAR and the foreign air carrier's operations specifications. Surveillance of a foreign air carrier shall be conducted on a routine or recurring basis. If a foreign air carrier experiences a series of accidents, incidents, violations, or complaints (that relate to safety), the district office manager holding the foreign air carrier's operations specifications shall initiate surveillance as necessary to resolve any safety deficiencies.

(1) Surveillance Program Development. Offices that issue and/or are holders of operations specifications for FAR Part 129 operators shall develop their annual work programs to incorporate any required surveillance "R" items directed under the national program guidelines. Only inspectors who have attended the FAR Part 129 training seminar may accomplish these surveillance items.

(2) Work Programs. Normally, surveillance of FAR Part 129 operators shall be accomplished by the office that issues the operations specifications. Surveillance may include routine and unannounced ramp inspections in addition to the "R" items. Geographic units may plan FAR Part 129 surveillance as part of the scheduled work program at the request of the principal inspector and only if the geographic inspector designated to accomplish the surveillance has attended the FAR Part 129 training seminar.

B. Foreign Air Carriers Operating Foreign-Registered Aircraft. Volume 6, chapter 2, section 2, contains general information for conducting ramp inspections. This information is considered limited for conducting FAR Part 129 surveillance as it does not

address the differences that inspectors may encounter while inspecting a foreign operator. Normally, principal inspectors shall limit any routine or unannounced ramp inspection of a foreign air carrier conducting operations with foreign-registered aircraft to those operations being conducted in the U.S and shall normally include only the following inspection items:

- Aircraft markings
- Aircraft airworthiness and registration certificates
- Flight crewmember certificates
- Air traffic compliance
- Taxi and ramp procedures
- Passenger enplaning/deplaning procedures
- Baggage and cargo (especially hazardous cargo)
- Compliance with pilot-in-command (PIC) age 60 policy (Inspectors must ensure that PIC's of foreign- or U.S.-registered aircraft being used in FAR Part 129 operations are in compliance with the FAA's policy. See subparagraph 297C.)

C. Pilot Age Policy and Amendment of Operations Specifications.

(1) FAA Safety Policy. A foreign air carrier conducting operations within the U.S. using aircraft having a passenger seating configuration of more than 30 seats, excluding any required crewmember seat, or a payload capacity of more than 7,500 pounds (3,400 kg), regardless of the state of registry of the aircraft, must comply with the standard contained in Annex 1 to the Chicago Convention of the International Civil Aviation Organization (ICAO) ("Personnel Licensing," chapter 2, "Licenses and Ratings for Pilots," paragraph 2.1.10.1.); that is, to prohibit a flight crewmember from acting as PIC of an aircraft described above if that person has attained his or her 60th birthday and the aircraft is being operated in scheduled or nonscheduled international air transport operations for remuneration or hire.

(2) Amendment of Operations Specifications. Principal operations inspectors (POI) of FAR Part 129 operators shall add to Part A of each of their assigned foreign flag air carriers' operations specifications a new sequentially numbered paragraph that addresses each carrier's compliance with the PIC age 60 policy, as follows:

> "[Air carrier name] may not use the services of, nor may any person act as, a pilot in command of any aircraft having a passenger seating configuration of more than 30 seats or payload capacity of more than 7,500 pounds (3,400 kg) engaged in operations under the authority of these operations specifications, if the 60th birthday of that person has been attained."

D. Foreign Air Carriers Operating U.S.-Registered Aircraft. Inspectors may conduct routine and unannounced ramp inspections (at any location) of foreign air carriers conducting operations with U.S.-registered aircraft. In addition to including for inspection the items and activities indicated in subparagraph 297B, inspectors should accomplish inspections to determine the following:

- That appropriate U.S. airman certificates are used
- That a U.S. airworthiness certificate is valid for the aircraft
- That an appropriate maintenance program is being used
- That an approved minimum equipment list (MEL) is used, if applicable

E. Frequency of Inspections. Inspectors shall initiate surveillance any time the chief executive officer of the foreign air carrier or the foreign state civil aviation authority requests it in writing. Certain foreign air carriers have requested that FAA inspectors conduct significantly more in-depth inspections of their operations than is required.

F. Need for Diplomacy. Inspectors should take particular care to diplomatically explain, with the foreign air carrier's representative, each discrepancy. Inspectors should also offer suggested corrective action and appropriate FAA assistance to promptly correct each discrepancy. Items not governed by the FAR or approved operations specifications (such as training programs, cabin safety procedures, and non-U.S.-registered aircraft maintenance programs) shall not be inspected, unless a specific written request has been made by either the foreign air carrier or the state civil aviation authority of the foreign air carrier, or when directed by FAA Headquarters.

G. Disagreements Concerning Inspection Findings. If a foreign air carrier's representative disagrees with any inspection findings, the FAA office that conducted the surveillance shall prepare a written report of these inspection findings and recommended corrective actions and address it to the state civil aviation authority. After coordinating with the district office holding the operations specifications of the foreign air carrier and the appropriate regional and Head-

quarters personnel (Flight Standards and Regional/ Chief Counsel), the initiating office shall mail the report to the state's civil aviation authority with copies to the appropriate regional Headquarters office, to AFS-1, to the Office of International Aviation (AIA-100), and to AGC-200.

H. Serious Safety Deficiencies. If the surveillance reveals serious safety deficiencies that cannot be corrected through positive action by the foreign air carrier's representative, the foreign air carrier principal inspector must directly consult with either the chief executive officer of the foreign air carrier or the state civil aviation authority, or both. This direct contact will usually result in quick correction of any serious safety deficiency (see paragraphs 267 and 269). If the top management of the foreign air carrier or the state civil aviation authority, or both, fail to take positive action, the FAA shall take swift enforcement action to amend or revoke (as necessary) the foreign air carrier's operations specifications.

299. SAFETY ENFORCEMENT. The ultimate goal of the FAA's enforcement policy is to prevent incidents, accidents, and the occurrence of FAR violations. This goal is primarily achieved through education, counseling, and surveillance designed to encourage voluntary compliance. When methods for achieving voluntary compliance fail, violations must be addressed consistently, fairly, and in a manner that reasonably serves the purpose of deterring future violations. Toward those ends, the following policies with respect to foreign air carriers shall be followed:

A. Surveillance of regulated activities shall be conducted as needed to ensure compliance with the regulations, including surveillance of foreign operators that conduct any operations within the U.S. and, if U.S.-registered aircraft are being used, at any place outside the U.S.

B. All reports of violations by foreign operators shall be promptly and thoroughly investigated.

C. Agency personnel responsible for investigation or enforcement, in their relations with foreign air carrier representatives, shall strive to be fair, objective, and courteous and shall perform their responsibilities in a professional manner.

D. All stages of enforcement investigations and legal or administrative actions shall be completed in a timely manner.

E. Enforcement investigative reports shall contain complete accounts of known circumstances surrounding the violations alleged, including all known, mitigating, or aggravating factors.

F. Enforcement sanctions, both administrative and legal, shall be pursued as evenhandedly as possible and shall be conducted in accordance with the provisions of FAR Part 13.

> *FYI: FAA Order 2150.3A, "Compliance and Enforcement Program," provides a description of the authority, responsibilities, policies, guidelines, procedures, objectives, and legal aspects of the FAA compliance and enforcement program with respect to foreign operators.*

301. ACCIDENT, INCIDENT, NEAR MIDAIR, AND COMPLAINT INVESTIGATION. FAA procedures and responsibilities for aircraft accident and incident (including near midair collisions) notification, investigation, and reporting are prescribed in FAA Order 8020.11, "Aircraft Accident and Incident Notification, Investigation, and Reporting." FAA responsibilities remain unchanged when U.S.-registered or U.S.-manufactured aircraft are involved in an accident or incident in a foreign country. The degree of participation in the investigation, however, is subject to ICAO Annex 13, "Standards and Recommended Practices for Aircraft Accident Inquiries," U.S. State Department policy, and any special agreement that may apply between the U.S. and any particular country. Public complaints that directly relate to safety shall be investigated as incidents in accordance with FAA Order 8020.11. Non-safety-related consumer complaints shall be handled in accordance with paragraph 271.

302.–306. RESERVED.

[PAGES 2-186 THROUGH 2-192 RESERVED]

CHAPTER 4. FOREIGN AIR CARRIERS AND FOREIGN OPERATORS OF U.S.-REGISTERED AIRCRAFT ENGAGED IN COMMON CARRIAGE

SECTION 4. LEASING AGREEMENTS AND INTERCHANGE ARRANGEMENTS

307. GENERAL. Leasing and interchange of large transport category aircraft between United States (U.S.) and foreign air carriers is widely used. Leasing agreements are characterized as either "wet" or "dry." An interchange agreement is a subset of a dry lease.

309. WET LEASE. The term "wet lease" means a leasing agreement whereby a certificate holder agrees to provide an aircraft and at least one pilot flight crewmember. The words "certificate holder" as used in Special Federal Aviation Regulations (SFAR) 38-2 refer to a U.S. citizen authorized to operate aircraft for compensation or hire under Federal Aviation Regulations (FAR) Parts 121 and 135. FAR § 121.153(c) prohibits a U.S. air carrier from wet leasing any aircraft from any foreign air carrier or foreign person. This prohibition is partly based on § 41703 of Title 49, United States Code (U.S.C.) (formerly § 1108(b) of the Federal Aviation Act (FA Act) of 1958). Foreign air carriers and foreign persons conducting common carriage operations usually prefer to dry lease U.S.-registered aircraft in order to have operational control of the leased U.S.-registered aircraft. FAA policy requires each U.S. air carrier to retain operational control of each wet leased aircraft listed on its operations specifications regardless of whether the aircraft is U.S.- or foreign-registered. This policy applies to aircraft wet leased to any foreign air carrier and to any foreign person.

NOTE: A U.S. air carrier may not lease or charter with crew (wet lease) any aircraft (either foreign- or U.S.-registered) from any foreign air carrier (§ 41703 of Title 49, U.S.C.) and FAR § 121.153(c) and § 135.25(d)). See volume 3, chapter 13.

311. DRY LEASE.

A. The leasing of U.S.-registered aircraft (without crewmembers) by foreign air carriers and foreign persons engaged in common carriage is widely used. A dry lease permits the lessee to have operational control and provide the necessary flight and cabin crewmembers, ground personnel, dispatchers, and ground facilities necessary to operate the leased aircraft. A dry leased aircraft must be removed from the U.S. air carrier's operations specifications and listed on the foreign air carrier lessee's operations specifications.

B. Operation of a dry lease U.S.-registered aircraft by any foreign air carrier operating into and out of the U.S. or by any foreign person engaged in common carriage solely outside the U.S. shall be conducted in compliance with the following:

- Appropriate requirements of FAR Part 91 (See FAR § 91.1 applicability.)
- FAR Part 129 (foreign air carrier only)
- FAR § 129.14, which provides the maintenance and minimum equipment list (MEL) requirements for U.S.-registered aircraft operated by a foreign air carrier or a foreign person engaged in common carriage solely outside the U.S. (See FAR § 129.1(b).)
- FAR §§ 61.3(a), 61.77, and 63.23, which provide the appropriate flight crewmember (pilot, flight engineer, and flight navigator) certificate requirements (See section 6 of this chapter.)
- FAR Parts 21, 43, and 65
- Title 49, Part 175 of the Code of Federal Regulations (49 CFR 175), which prescribes rules for loading and carrying dangerous articles and magnetized materials in any civil aircraft in the U.S. and in civil aircraft of U.S. registry anywhere in air commerce
- All applicable orders and regulations of other U.S. agencies and courts, and with all applicable laws of the U.S.

FYI: It is advisable for the lessor to include in the lease agreement the applicable provisions of the FAR under which the aircraft will be operated and maintained to ensure the airworthiness of the aircraft when it is returned to the lessor.

C. Operations specifications and amendments that authorize the use of any U.S.-registered aircraft by a foreign air carrier should be applied for and processed in accordance with FAR § 129.11 and section 2.

313. INTERCHANGE AGREEMENT.

A. An interchange agreement (a subset of a dry lease) is another method of providing operational flexibility and greater utilization of large transport category aircraft. Interchange agreements permit a foreign air carrier or foreign person to dry lease and take or relinquish operational control of an aircraft at an airport located either in the U.S. or in the state of the foreign air carrier or foreign person.

B. An aircraft used in an interchange agreement may be simultaneously listed on the operations specifications of both the U.S. and the foreign air carrier. Operational control of the aircraft is transferred at an airport specified in the agreement and as authorized in the operations specifications. For example, a foreign air carrier operates into Washington Dulles International Airport and turns over the aircraft to a U.S. air carrier that conducts its own operation between Dulles and certain airports within the U.S. Another example is a U.S. air carrier that operates an aircraft into a United Kingdom airport (the specified interchange point airport for the U.S. air carrier) and turns the aircraft over to a foreign operator that then operates the aircraft on certain of its routes within Europe. In such interchange agreements, the aircraft may be of either U.S. or foreign registry. However, if the aircraft is foreign registered, it must specifically comply with FAR § 121.153(c) or FAR § 135.25(d), as appropriate, in order to be operated by a U.S. certificate holder.

C. The operations specifications of both the U.S. and foreign air carrier must be amended to reflect any interchange agreement. If the aircraft is of U.S. registry, the foreign operator must comply with the applicable FAR requirements while it has operational control of the aircraft.

> *FYI: Operations specifications are not issued to a foreign operator of a U.S-registered aircraft engaged in common carriage solely outside the U.S. However, the foreign operator must comply with FAR § 129.14 and all other applicable FAR requirements while it has operational control of any U.S.-registered aircraft.*

314.–318. RESERVED.

[PAGES 2-195 THROUGH 2-202 RESERVED]

CHAPTER 4. FOREIGN AIR CARRIERS AND FOREIGN OPERATORS OF U.S.-REGISTERED AIRCRAFT ENGAGED IN COMMON CARRIAGE

SECTION 5. MAINTENANCE AND MINIMUM EQUIPMENT LISTS FOR U.S.-REGISTERED AIRCRAFT

319. GENERAL.

A. Federal Aviation Regulations (FAR) § 129.14. This regulation provides the maintenance and minimum equipment requirements for United States (U.S.)-registered aircraft operated by a foreign air carrier or any foreign person engaged in common carriage solely outside the U.S. Each foreign operator of a U.S.-registered aircraft must ensure that the aircraft is maintained in accordance with a program acceptable to the Administrator which is consistent with the aircraft maintenance program requirements of FAR Part 121 or 135, as applicable. See FAR § 129.14(a) and (b).

B. International Civil Aviation Organization (ICAO) Annex 8, Paragraph 4. "Continuing Airworthiness of Aircraft," states that the continuing airworthiness of an aircraft shall be determined by the state of registry in relation to the appropriate airworthiness requirements in force for that aircraft at the time of inspection. This applies to both normal inspections and to inspections after the aircraft has been damaged.

321. APPROVAL. FAR § 129.14(c) provides for the approval and use of a minimum equipment list (MEL) by a foreign operator. Each foreign operator may develop its own MEL based on the master minimum equipment list (MMEL) approved by the Federal Aviation Administration (FAA) for the specific aircraft type. In seeking approval of its MEL, the foreign operator must show that the maintenance procedures in its maintenance program are adequate to support the use of its MEL. Alternatively, if the foreign operator has leased a U.S.-registered aircraft from a U.S. air carrier, the foreign operator may decide to maintain and operate the aircraft in accordance with the U.S. air carrier's continuous airworthiness maintenance program and the U.S. air carrier's FAA-approved MEL. In either case, the foreign operator must submit for processing and approval both the MEL and the maintenance program to the Flight Standards District Office (FSDO) having responsibility for the foreign operator. See volume 4, chapter 4, for the MEL approval process.

322.–326. RESERVED.

[PAGES 2-204 THROUGH 2-208 RESERVED]

CHAPTER 4. FOREIGN AIR CARRIERS AND FOREIGN OPERATORS OF U.S.-REGISTERED AIRCRAFT ENGAGED IN COMMON CARRIAGE

SECTION 6. SPECIAL PURPOSE FLIGHT CREWMEMBER CERTIFICATES

327. APPLICABILITY.

A. Federal Aviation Regulations (FAR) §§ 61.77 and 63.23 provide requirements for the issuance of special purpose pilot and flight engineer/flight navigator certificates, respectively. The special purpose certificate is issued on the basis that the foreign flight crewmember holds, among other things, a current foreign certificate or license issued by the state of the foreign employer. A special purpose certificate allows the holder to perform appropriate flight crewmember duties on a United States (U.S.)-registered civil airplane leased by any foreign air carrier or foreign person on flights between foreign countries and in foreign air commerce.

B. The special purpose flight crewmember certificate is only valid while the holder is employed by a foreign air carrier or a foreign person and is acting as a required flight crewmember on a leased U.S.-registered airplane during flights between foreign countries in foreign air commerce. The special purpose flight crewmember certificate is only valid during operations carrying persons or property for compensation or hire. The eligibility and limitations of special purpose flight crewmember certificates are specified in FAR §§ 61.77(b), 63.23(b), 61.77(d), and 63.23(d).

C. Special purpose flight crewmember certificates only apply for the operation of airplane types that have a passenger seating configuration of more than 30 seats, including any required flight crewmember seat, or a maximum payload capacity (as defined in Special Federal Aviation Regulations (SFAR) 38-2) of more than 7,500 pounds. Foreign flight crewmembers seeking to operate any smaller U.S.-registered airplane, or any U.S.-registered aircraft of any other category (regardless of size) should petition for an exemption from FAR § 61.77(a) or § 63.23(a), as appropriate, in order to obtain special purpose flight crewmember certificates.

329. FORMS, ISSUANCE, AND DISPOSITION.

The application forms and documentation required to show that an applicant is eligible for the issuance or renewal of special purpose flight crewmember certificates are identified in the "Applicant Presents" column in figure 2.4.6.1. Applications for flight crewmembers employed by foreign air carriers shall be mailed or delivered to the Flight Standards District Office (FSDO) that issued operations specifications to the foreign air carrier. Applications for flight crewmembers not employed by a foreign air carrier shall be mailed or delivered to the FSDO having geographic responsibility for the foreign operator. The inspector who receives a formal application for a special purpose flight crewmember certificate will examine the application and necessary documentation. When satisfied that the applicant meets the eligibility requirements, the inspector will complete FAA Form 8060-4, "Temporary Airman Certificate." The duplicate certificate and the supporting documentation identified in the column headed "Applicant Receives from the Inspector" in figure 2.4.6.1. will then be returned or mailed to the applicant. The inspector also will mail, to AVN-460, copies of the forms specified in the column headed "Inspector Sends to Certification Branch, AVN-460." For more detailed information on the issuance of special purpose flight crewmember certificates, refer to volume 5.

331. TERMINATION OF SPECIAL PURPOSE FLIGHT CREWMEMBER CERTIFICATES.

Special purpose flight crewmember certificates terminate when any of the following conditions occur:

- When the lease agreement applicable to U.S.-registered aircraft expires
- When the foreign airman certificate or license or medical documentation is suspended, revoked, or no longer valid
- When the certificate holder (pilots only) reaches the age of 60
- Twenty-four months after the month in which the special purpose flight crewmember certificate was issued

333. SURRENDER OF SPECIAL PURPOSE FLIGHT CREWMEMBER CERTIFICATES. FAR §§ 61.77(f) and 63.23(f) require the holder of a special purpose flight crewmember certificate to surrender the certificate to the appropriate FAA field office within 7 days after the date it terminates. Each certificate surrendered to the Administrator shall be mailed to AVN-460.

334.–338. RESERVED.

FIGURE 2.4.6.1.
SPECIAL PURPOSE FLIGHT CREWMEMBER CERTIFICATES

Applicant Presents to the Inspector	Applicant Receives from the Inspector	Inspector Sends to Certification Branch, AVN-460
FAA Form 8410-2 or FAA Form 8710-1 or FAA Form 8400-3		FAA Form 8410-2 or FAA Form 8710-1 or FAA Form 8400-3
Copy or original of valid foreign pilot, flight engineer, or flight navigator certificate or license, as appropriate, issued by ICAO member state.	Foreign License or Certificate	Copy of valid foreign pilot, flight engineer, or flight navigator certificate or license, as appropriate, issued by ICAO member state.
Certification by lessee of aircraft	Certification by lessee of aircraft	
Evidence of medical qualification	Evidence of medical qualification	
Documentation of under age 60 for pilot's certificate	Age documentation	
	Duplicate copy of the FAA Form 8060-4	Original of the FAA Form 8060-4

[PAGES 2-212 THROUGH 2-216 RESERVED]

VOLUME 3. TABLE OF CONTENTS

AIR OPERATOR TECHNICAL ADMINISTRATION

Page

CHAPTER 1. OPERATIONS SPECIFICATIONS

Section 1. Background Information

1. Applicability 3-1
3. History of OpSpecs 3-1
5. Conceptual Need for OpSpecs 3-1
7. Legal Basis for OpSpecs 3-1
9. Standard OpSpecs 3-2
11. Availability of OpSpecs to Crewmembers and Other Employee Personnel 3-2
12.-20. Reserved 3-2

Section 2. Automated Operations Specifications

21. General 3-13
23. Air Operator Vital Information Subsystem 3-13
25. Operations Specifications Checklist 3-14
27. Operations Specifications Worksheets 3-14
29. Drafts of Operations Specifications 3-15
31. Format of Automated Operations Specifications 3-15
33. Table of Contents for Operations Specifications 3-16
35. Automated Features and Symbology of Automated Operations Specifications Paragraphs 3-16
37. Additional Text 3-22
39. Reserved Paragraphs and Nonstandard Paragraphs 3-22
41. Printing Automated Operations Specifications 3-23
43. Completing the Reverse Side and Approval of Operations Specifications 3-23
45. Operator's Receipt of Approved Operations Specifications 3-25
46.-60. Reserved 3-25

Section 3. Operations Specifications Part A—General

61. Discussion 3-38
63. A1—Issuance and Applicability 3-38
65. A2—Definitions and Abbreviations 3-43
67. A3—Airplane/Aircraft Authorization 3-43
69. A4—Summary of Special Authorizations and Limitations 3-43
71. A5—Exemptions and Deviations 3-49
73. A6—Management Personnel 3-50
75. A7—Other Designated Persons 3-50
77. A8—Operational Control 3-50
79. A9—Airport Aeronautical Data 3-51
81. A10—Aeronautical Weather Data 3-51
83. A11—Approved Carry-On Baggage Program 3-52
85. A12—Domestic Operations to Certain Foreign Airports 3-52
87. A13—Part 121 Operations Without Certain Emergency Equipment 3-52
89. A14—IFR Operations Outside Controlled Airspace 3-53
91. A15—Autopilot in Lieu of Required Second-In-Command 3-53
93. A16—Single Pilot, Single Pilot-In-Command, or Basic Part 135 Operators 3-54

VOLUME 3. TABLE OF CONTENTS—Continued

		Page
95.	A17—Approved Security Program for Helicopters	3-54
97.	A18—Scheduled Helicopter Operations	3-54
99.	A19—Automotive Gasoline as Aircraft Fuel	3-55
101.	A20—Airplane Operations Without Instrument-Rated Pilots	3-55
103.	A21—Aeromedical Helicopter Operations	3-56
105.	A28—Aircraft Wet Lease Arrangements	3-57
107.	A29—Aircraft Interchange Arrangements	3-57
109.	A30—Part 121 Supplemental Operations	3-57
110.-120.	Reserved	3-57
Section 4.	Part B—En Route Authorizations and Limitations	
121.	B31—Areas of En Route Operation	3-64
123.	B32—En Route Limitations and Provisions	3-64
125.	B33—Flight Rules, Limitations, and Provisions	3-64
127.	B34—Class I Navigation Using Area Navigation Systems	3-64
129.	B35—Class I Navigation in the U.S. Positive Control Area (PCA) Using Area or Long-Range Navigation Systems	3-65
131.	B36—Class II Navigation Using Long-Range Navigation Systems or a Flight Navigator	3-65
133.	B37—Operations in Central East Pacific (CEPAC) Composite Airspace	3-66
135.	B38—North Pacific (NOPAC) Operations	3-67
137.	B39—Operations Within North Atlantic (NAT) Minimum Navigation Performance Specifications (MNPS) Airspace	3-67
139.	B40—Operations in Areas of Magnetic Unreliability	3-68
141.	B41—North Atlantic Operation (NAT/OPS) with Two-Engine Airplanes Under Part 121	3-69
143.	B42—Extended-Range Operations with Two-Engine Airplanes Under Part 121 (ER-OPS)	3-69
145.	B43—Special Fuel Reserves in International Operations	3-71
147.	B44—Planned Inflight Redispatch or Rerelease En Route	3-72
149.	B50—Authorized Areas of En Route Operation, Limitations, and Procedures	3-72
150.-160.	Reserved	3-76
Section 5.	Part C—Airplane Terminal Instrument Procedures and Airport Authorizations and Limitations	
161.	General	3-85
163.	C51—Terminal Instrument Procedures	3-85
165.	C52—Basic Instrument Approach Procedure Authorizations—All Airports	3-85
167.	C53—IFR Landing Minimums Other than Categories II and III—All Airports	3-85
169.	C54—Special Limitations and Provisions for Instrument Approach Procedures and IFR Landing Minimums	3-85
171.	C55—Alternate Airport IFR Weather Minimums	3-86
173.	C56—IFR Takeoff Minimums, Part 121 Operations—All Airports	3-87
175.	C57—IFR Takeoff Minimums, Part 135 Operations—All Airports	3-87
177.	C58—Special Restrictions for Foreign Terminal Instrument Procedures	3-87
179.	C59—Category II (CAT II) Instrument Approach and Landing Operations	3-87
181.	C60—Category III Instrument Approach and Landing Operations	3-91
183.	C61—Flight Control Guidance Systems for Automatic Landing Operations Other than Categories II and III	3-96
185.	C62—Manually Flown Flight Control Guidance System Certified for Landing Operations Other than Categories II and III	3-96
187.	C63—Instrument Approach Operations Using an Area Navigation System (TBD)*	3-97

*(TBD)=TO BE DEVELOPED

VOLUME 3. TABLE OF CONTENTS—Continued

Page

189. C64—Special Terminal Area IFR Operations—Authorizations, Limitations, and Provisions 3-97
191. C65—Powerback Operations with Airplanes 3-97
193. C66—Turbojet Airplane Takeoff Operations in Tailwind Conditions 3-98
195. C67—Special Airport Authorizations, Provisions, and Limitations 3-98
196. C68—Noise Abatement Departure Profiles (NADP) Item 7k 3-99
197. C70—Airports Authorized for Scheduled Operations 3-99
198.-210. Reserved 3-100

Section 6. Part H—Helicopter Terminal Instrument Procedures and Airport Authorizations and Limitations

211. General 3-105
213. H101—Terminal Instrument Procedures 3-105
215. H102—Basic Instrument Approach Procedure Authorizations—All Airports 3-105
217. H103—IFR Landing Minimums Other than Airborne Radar and Categories II and III Approaches—All Airports 3-105
219. H104—Helicopter En Route Descent Areas (HEDA) 3-105
221. H105—Alternate Airport IFR Weather Minimums 3-105
223. H106—IFR Takeoff Minimums, Helicopter Operations—All Airports 3-105
225. H107—Special Restrictions for Foreign Terminal Instrument Procedures 3-106
227. H108—Category II (CAT II) Instrument Approach and Landing Operations 3-106
229. H109—Category III (CAT III) Instrument Approach and Landing Operations 3-107
231. H110—Flight Control Guidance Systems for Automatic Landing Operations Other than Categories II and III 3-108
233. H111—Manually Flown Flight Control Guidance System Certified for Landing Operations Other than Categories II and III (TBD) 3-108
235. H112—Instrument Approach Operations Using an Area Navigation System (TBD) 3-108
237. H113—Special Terminal Area IFR Operations—Authorizations, Limitations, and Provisions 3-109
239. H114—Special Airport Authorization, Provisions, and Limitations (TBD) 3-109
241. H120—Airports Authorized for Scheduled Operations 3-109
242.-260. Reserved 3-110

Section 7. Amendment, Surrender, and Suspension of Operations Specifications

261. Applicability 3-123
263. Amendment Process Using Automated OpSpecs 3-123
265. Amendment of OpSpecs 3-123
267. Emergency Amendment of OpSpecs 3-124
269. Operator Appeal Rights 3-125
271. Surrendering of OpSpecs 3-126
273. Suspension of OpSpecs 3-126
274.-280. Reserved 3-126

CHAPTER 2. TRAINING PROGRAMS AND AIRMAN QUALIFICATIONS

Section 1. Scope, Concepts, and Definitions

281. Training Program Overview 3-157
283. Definitions 3-157
285. Aircraft Families 3-159
287. Training Programs: A Schematic Depiction 3-160
289. Categories of Training 3-162
291. Applicability of Training Categories 3-166
293. Curriculum Development 3-166

VOLUME 3. TABLE OF CONTENTS—Continued

		Page
295.	Curriculum Segments	3-167
297.	Training Module Construction (Elements or Events)	3-169
299.	Deleted	3-170
300.-310.	Reserved	3-170
Section 2.	Training Approval Process	
311.	General	3-175
313.	Operations Conducted Under Both Parts 121 and 135	3-175
315.	Initiating the Approval Process—Phase One	3-175
317.	FAA Involvement In Phase One	3-176
319.	Requests for Initial Approval—Phase Two	3-177
321.	Additional Relevant Supporting Information—Phase Two	3-178
323.	Initial Review of Requests for Approval—Phase Two	3-178
325.	Training Curriculums Submitted with Air Operator Certificate Applications	3-179
327.	Indepth Review of Submitted Curriculums—Phase Three	3-179
329.	Expiration Dates for Initial Approvals	3-180
331.	Method of Granting Initial Approval	3-180
333.	Method of Denying Initial Approval	3-183
335.	Evaluating Initially Approved Training Curriculums—Phase Four	3-184
337.	Elements Available for Evaluating Training—Phase Four	3-184
339.	Method for Granting Final Approval—Phase Five	3-185
341.	Revisions to Training Curriculums	3-188
343.	Withdrawing Approval of Training Curriculums	3-188
345.	Expired Training Curriculums	3-188
347.	Withdrawal of Initial Approval of Training Curriculums	3-189
349.	Withdrawal of Final Approval of Training Curriculums	3-190
351.	Organization of District Office Training Program Files	3-192
352.-360.	Reserved	3-192
Section 3.	Flightcrew Basic Indoctrination Curriculum Segments	
361.	General	3-203
363.	Objective of Basic Indoctrination	3-203
365.	Operator-Specific Indoctrination	3-203
367.	Airman-Specific Indoctrination Training	3-203
369.	Flightcrew Basic Indoctrination Training Modules	3-204
371.	Training Hours	3-205
373.	Course Completion Requirements	3-206
375.	Content of Flightcrew Basic Indoctrination Curriculum Segments	3-206
377.	Operator-Specific Training Modules	3-206
379.	Airman-Specific Training Modules	3-207
381.	Evaluation of Flightcrew Basic Indoctrination Curriculum Segment Outlines for Initial Approval	3-208
383.	Flight Crewmember Basic Indoctrination Curriculum Segment Job Aid	3-208
385.	Drug/Alcohol Testing Program Approval and Inclusion in Basic Indoctrination Training	3-209
386.-390.	Reserved	3-209
Section 4.	Flightcrew General Emergency Training Curriculum Segments	
391.	General	3-217
393.	General Emergency Training Curriculum Segments	3-217
395.	Recurrent General Emergency Training	3-218
397.	General Emergency Training Modules	3-219
399.	Training Hours	3-220

VOLUME 3. TABLE OF CONTENTS—Continued

		Page
401.	Course Completion Requirements	3-221
403.	Content of Flight Crewmember General Emergency Training Curriculum Segments	3-221
405.	Emergency Situation Training Modules	3-221
407.	Emergency Drill Training Modules	3-222
409.	Recurrent General Emergency Training Modules	3-222
411.	Cabin and Exit Mockups	3-223
413.	Evaluation of Flight Crewmember General Emergency Training Curriculum Segment Outlines for Initial Approval	3-223
415.	Flight Crewmember General Emergency Training Job Aid	3-223
416.-424.	Reserved	3-223
Section 5.	Flightcrew Aircraft Ground Training Curriculum Segments	
425.	General	3-233
427.	Aircraft Ground Training Objectives	3-233
429.	Aircraft Ground Training Curriculum Segments	3-233
431.	Aircraft Ground Training Modules	3-233
433.	Training Hours	3-235
435.	Course Completion Requirements	3-238
437.	Content of Aircraft Ground Curriculum Segments	3-238
439.	General Operational Subjects	3-238
441.	Aircraft Systems	3-240
443.	Aircraft Systems Integration Training	3-241
445.	Ground Training Devices	3-242
447.	Evaluation of Ground Training Curriculum Segment Outlines for Initial Approval	3-243
449.	Aircraft Ground Training Curriculum Segment Job Aid	3-243
450.-460.	Reserved	3-243
Section 6.	Flight Training Curriculum Segments	
461.	General	3-253
463.	Flight Training Objectives	3-253
465.	Qualification Objectives	3-253
467.	Flight Training Modules or Event Outlines	3-253
469.	Training Hours	3-254
471.	Course Completion Requirements	3-259
473.	Evaluation of Flight Training Curriculum Segment Outlines for Initial Approval	3-259
475.	Evaluating the Operator's Maneuvers and Procedures Document	3-259
477.	Aircraft Families	3-260
479.	Flight Training Devices and Flight Simulators	3-260
481.	Level 4 Flight Training Device	3-260
483.	Level 5 Flight Training Device	3-261
485.	Level 6 Flight Training Device	3-261
487.	Level 7 Flight Training Device	3-261
489.	Level A Flight Simulator	3-262
491.	Level B Flight Simulator	3-262
493.	Level C Flight Simulator	3-263
495.	Level D Flight Simulator	3-263
497.	Maneuvers and Procedures Tables	3-264
499.	PIC/SIC Initial New-Hire and Initial Equipment Flight Training: Transport and Commuter Category Airplanes	3-264
501.	PIC/SIC Transition and Upgrade Flight Training: Transport and Commuter Category Airplanes	3-267
503.	PIC/SIC Recurrent Flight Training (RFT): Transport and Commuter Category Airplanes	3-270

VOLUME 3. TABLE OF CONTENTS—Continued

Page

505. FE Initial Equipment, Initial New-Hire, Transition and Recurrent Flight Training: Transport Category Airplanes 3-274
507. PIC/SIC Flight Training (All Training Categories): Multiengine General Purpose Airplanes 3-277
509. PIC/SIC Flight Training (All Training Categories): Single-Engine Airplanes 3-280
511. PIC/SIC Flight Training (All Training Categories): Helicopters 3-283
512.-522. Reserved 3-283

Section 7. Flightcrew Qualification Curriculum Segments

523. General 3-293
525. Types of Qualification Modules 3-293
527. Format of Qualification Curriculum Segments 3-294
529. Part 121 Required Certificates 3-294
531. Part 135 Required Certificates 3-294
533. Part 135 Minimum PIC Flight Experience Requirements 3-295
535. The Basic Checking Module 3-296
537. Part 121 Basic Checking Module 3-296
539. Part 135 Basic Checking Module 3-301
541. Deleted 3-309
543. Credit for Certification Flight Checks 3-309
545. Conduct of Proficiency and Competency Checks 3-309
547. Use of Flight Training Devices and Simulators for Proficiency and Competency Checks 3-310
549. The "Operating Experience" (OE) Qualification Module 3-310
551. The Line Check Qualification Module 3-312
553. Additional Checking Modules 3-313
554.-566. Reserved 3-314

Section 8. Special Curriculum Segments

567. General 3-323
569. Special Curriculum Segment Content 3-323
571. Special Curriculum Segment Approval 3-323
573. Specific Applications of Special Curriculums 3-323
574.-578. Reserved 3-324

Section 9. Differences Training—All Training Categories

579. General 3-331
581. Methods for Accounting for Differences 3-331
583. Specific Situations Requiring Differences Training 3-332
585. Differences Evaluation 3-332
587. Degrees of Differences 3-334
589. Recurrent Differences Training and Currency Events 3-334
591. Approval Process 3-335
593. Seat-Dependent Training 3-335
594.-598. Reserved 3-335

Section 10. Flightcrew Recurrent Training Curriculums

599. General 3-343
601. Objective of Recurrent Training 3-343
603. Training/Checking Month and Eligibility Periods 3-343
605. Recurrent Aircraft Ground Training Curriculum Segments 3-344
607. Written or Oral Testing 3-345
609. Recurrent General Emergency Training Curriculum Segments 3-345

VOLUME 3. TABLE OF CONTENTS—Continued

Page

611. Recurrent Flight Training and Qualification Curriculum Segments—Part 121 3-346
613. Recurrent Flight Training and Qualification Curriculum Segments—Part 135 3-347
614.-616. Reserved 3-348

Section 11. Flightcrew Requalification Training Curriculums

617. General 3-353
619. Re-Establishing Landing Currency of Part 121 Pilots 3-353
621. Re-Establishing Currency of Part 121 Flight Engineers 3-354
623. Re-Establishing Landing Currency of Part 135 Pilots 3-354
625. Requalification for Failure to Complete Recurrent Training During the Eligibility Period 3-355
627. Crewmembers Who are Noncurrent or Overdue Upon Reassignment to a Different Type of Aircraft 3-357
629. Crewmembers Reassigned to a Previously Held Duty Position in an Aircraft Currently Being Flown 3-357
631. Requalification of Flight Crewmembers Who Have Failed a Check 3-358
633. Evaluation of Requalification Training Curriculums for Initial Approval 3-358
634.-636. Reserved 3-358

CHAPTER 3. CHECK AIRMAN, INSTRUCTOR, AND SUPERVISOR PROGRAMS

Section 1. General

637. Introduction 3-365
639. Regulatory Requirements 3-365
641. Definitions 3-365
643. Check Airman Role and Characteristics 3-366
645. Classifications of Check Airmen 3-366
647. Proficiency Check Pilot—Aircraft 3-366
649. Proficiency Check Pilot—Simulator 3-367
651. Line Check Pilot—All Seats 3-368
653. Line Check Pilot—Observer's Seat Only 3-368
655. Check Pilot—All Checks 3-369
657. Check Flight Engineer—Airplane Only 3-369
659. Check Flight Engineer—All Checks 3-369
661. Air Transportation Instructor Role and Characteristics 3-370
663. Air Transportation Flight Instructor—Aircraft 3-370
665. Air Transportation Flight Instructor—Simulator Only 3-371
667. Air Transportation Ground Instructor 3-371
669. Part 121 Air Transportation Supervisors 3-372
670.-680. Reserved 3-372

Section 2. Check Airman Approval Process

681. General 3-379
683. Phase One—Operator Familiarization with Check Airman Requirements 3-379
685. Phase Two—Submission of Documentation 3-379
687. Phase Three—Review of Documentation 3-379
689. Phase Four—Check Airman Evaluation 3-379
691. Phase Five—Check Airman Approval 3-381
693. Surveillance of Check Airmen 3-385
695. Approval of Initial Cadre Check Airmen 3-385
697. Designation of a Check Airman in Multiple Aircraft 3-387
699. Approval of a Check Airman to Serve Multiple Operators 3-387
701. Crewmember Failure Rates 3-392

VOLUME 3. TABLE OF CONTENTS—Continued

Page

702.-712. Reserved 3-392

Section 3. Check Airman and Air Transportation Flight Instructor Training

713. General 3-403
715. Check Airman and Air Transportation Flight Instructor Training 3-403
716.-726. Reserved 3-405

CHAPTER 4. THE ADVANCED QUALIFICATION PROGRAM

Section 1. Distinguishing Features of the Advanced Qualification Program

727. General 3-413
729. Characteristics of AQP 3-413
731. Key Concepts and Special Terminology 3-414
733. Instructors 3-416
735. Training and Evaluation Under AQP 3-416
736.-746. Reserved 3-417

Section 2. The Advanced Qualification Program Approval Process

747. General 3-431
749. Phased Approval Procedures 3-431
751. Data Base Management and Analysis 3-435
753. Method of Granting Initial or Provisional Approval 3-435
755. Method of Denying Initial or Provisional Approval 3-435
757. Withdrawal of Initial or Provisional Approval 3-435
759. Final Approval 3-435
761. Revisions to an AQP 3-436
763. General Provisions for Withdrawal of Final Approval 3-436
765. Appeal of a Withdrawal 3-436
766.-776. Reserved 3-436

Section 3. Advanced Qualification Program Airman Certification

777. General 3-449
779. Completion of Qualification Curriculum 3-449
781. Demonstration of Individual Skills 3-449
783. Authorized Evaluation Personnel 3-449
785. Airman Certification Documents 3-449
786.-796. Reserved 3-450

Section 4. Advanced Qualification Program Surveillance

797. General 3-461
799. Reporting on Surveillance 3-461
801. Specific Types of Inspections 3-461
802.-1044. Reserved 3-461

CHAPTER 5. AIRCRAFT DISPATCHER TRAINING AND QUALIFICATION PROGRAMS

Section 1. Aircraft Dispatcher Training Curriculums

1045. General 3-525
1047. Definitions 3-525
1049. Training Programs: A Schematic Depiction 3-527
1051. Categories of Training 3-529
1053. Curriculum Development 3-530
1054.-1060. Reserved 3-530

VOLUME 3. TABLE OF CONTENTS—Continued

Page

Section 2. Aircraft Dispatcher Training Approval Process (TBD)

1061.-1070. Reserved 3-537

Section 3. Aircraft Dispatcher Basic Indoctrination Curriculum Segments

1071. General 3-549
1073. Aircraft Dispatcher Basic Indoctrination Training 3-549
1075. Aircraft Dispatcher Basic Indoctrination Training Modules 3-550
1077. Curriculum Segment Completion Requirements 3-551
1079. Evaluation of Training Hours 3-552
1081. Evaluation of an Aircraft Dispatcher Basic Indoctrination Curriculum Segment Outline for Initial Approval 3-552
1082.-1092. Reserved 3-552

Section 4. Aircraft Dispatcher Initial Equipment and Transition Ground Training Curriculum Segments

1093. General 3-561
1095. Areas of Emphasis 3-562
1097. Evaluation of Training Hours 3-563
1099. Evaluation of an Aircraft Dispatcher General Ground Training Curriculum Segment Outline for Initial Approval 3-563
1100.-1110. Reserved 3-563

Section 5. Aircraft Dispatcher Qualification Curriculum Segments and Recurrent and Requalification Curriculums

1111. General 3-573
1113. Competency Checks 3-573
1115. Operational Familiarization Flights 3-574
1117. Qualification Curriculum Segments of Initial New-Hire and Initial Equipment Categories of Training 3-575
1119. Qualification Curriculum Segments in the Transition Category of Training 3-575
1121. Recurrent Training 3-575
1123. Area Familiarization 3-576
1125. Requalification Training 3-576
1126.-1144. Reserved 3-576

CHAPTER 6. OPERATIONAL CONTROL

Section 1. General Topics

1145. Background and Definitions 3-585
1147. WITHDRAWN—CHG 8 3-587
1149. Aircraft Dispatchers 3-587
1151. Flight Information 3-587
1153. Weather Information for Control of Flight Operations 3-590
1155. Flight Planning 3-591
1157. Selection of Alternate Airports 3-593
1159. Load Control 3-594
1161. Airworthiness of Aircraft 3-594
1163. Crew Qualification and Crew Flight Time Limitations and Rest Requirements 3-594
1165. Crew Medical Qualification and Procedures During Temporary Medical Deficiency 3-595
1166.-1174. Reserved 3-595

Section 2. Flight Dispatch Systems and Domestic Operating Rules

1175. General 3-603

VOLUME 3. TABLE OF CONTENTS—Continued

Page

1177. Facilities and Staffing 3-604
1179. Aircraft Dispatcher Duty Time Limitations 3-605
1181. Weather Requirements for Dispatch Under Domestic Rules 3-606
1183. Fuel Supply—Domestic Operations 3-607
1185. Original Dispatch 3-607
1187. Amendment of a Dispatch Release 3-608
1189. Load Manifests 3-610
1191. En Route Terrain Clearance 3-610
1192.-1202. Reserved 3-610

Section 3. Part 121 Flight Release Systems and Supplemental Operating Rules

1203. General 3-617
1205. Familiarity with Weather Conditions, Facilities, and Services 3-617
1207. Flight Release System Facilities 3-618
1209. Flight Release Form 3-618
1211. Weather Requirements for Flight Release Within the Contiguous States 3-618
1213. Fuel Supply—Operations in the Contiguous States 3-619
1215. Amendment of a Flight Release 3-620
1217. En Route Terrain Clearance 3-621
1218.-1228. Reserved 3-621

Section 4. Part 121 Flag Operations, Supplemental Operations Outside the Contiguous States, and Extended Overwater Operations

1229. General 3-629
1231. Destination Weather Minimums 3-629
1233. Designation of Destination Alternate Airports 3-629
1235. Required Fuel Supply: Non-Turbine and Turbopropeller Airplanes 3-630
1237. Required Fuel Supply: Turbojet-Powered Airplanes 3-631
1239. Special Fuel Reserves 3-632
1241. Planned Redispatch and Rerelease 3-633
1242.-1252. Reserved 3-635

Section 5. Part 135 Flight-Locating Systems and Operating Rules

1253. General 3-643
1255. General Requirements 3-643
1257. Flight-Locating Systems 3-643
1259. Part 135 Fuel-Planning Requirements 3-644
1261. Weather Requirements 3-645
1263. IFR Passenger-Carrying, Over-the-Top Operations 3-646
1265. Overwater, Passenger-Carrying Operations 3-647
1267. Part 135 Extended Overwater Operations 3-647
1268.-1400. Reserved 3-647

CHAPTER 7. AVIATION WEATHER INFORMATION SYSTEMS

Section 1. General Background Information

1401. General 3-657
1403. Background Discussion 3-657
1405. Aeronautical Weather Data 3-657
1407. Policy on Conditional Phrases in Remarks Portion of Weather Forecast 3-658
1409. Policy for Determining the Continued Adequacy of Weather Reports and Observations 3-658
1411. Sources for Technical Assistance and Meteorological References 3-659

VOLUME 3. TABLE OF CONTENTS—Continued

Page

1413. Definitions, Acronyms, and ICAO Equivalent Terms 3-659
1414.-1416. Reserved 3-661

Section 2. Parts 121/135 Weather Information Systems

1417. Regulatory Requirements for Weather Information 3-666
1419. General Characteristics of a Weather Information System 3-666
1421. Weather Information Systems—Operational Requirements 3-666
1423. Operational Requirements—Flightcrews 3-666
1425. Operational Requirements—Dispatch and/or Flight Control Personnel 3-667
1427. Adverse Weather Phenomena Reporting and Forecasting Requirements 3-667
1429. Approval of Adverse Weather Phenomena Reporting and Forecasting Subsystems 3-668
1431. Special Operational Requirements 3-669
1432.-1434. Reserved 3-670

Section 3. Sources of Weather Information

1435. General 3-677
1437. Regulatory Requirements Sources of Weather Reports 3-677
1439. Sources of NWS Weather Reports or Sources Approved by NWS 3-677
1441. Sources of Weather Reports Approved or Found Satisfactory by the FAA 3-678
1443. Sources of Weather Reports Used in Preparing Adverse Weather Phenomena Forecasts 3-678
1445. Sources of Weather Forecasts 3-678
1447. Automated Weather Reporting Systems 3-679
1448.-1452. Reserved 3-680

Section 4. Enhanced Weather Information Systems

1453. General 3-687
1455. Concept of an EWINS 3-687
1457. Characteristic Functions of an EWINS 3-687
1459. FAA Policies Concerning EWINS's 3-687
1461. EWINS Policies and Procedures Manual 3-688
1463. Personnel Qualifications 3-689
1465. Training for Dispatchers with FMF Authority 3-689
1467. Approval of an EWINS 3-691
1468.-1472. Reserved 3-691

CHAPTER 8. AIR CARRIER MANAGEMENT EFFECTIVENESS

Section 1. Scope and Concepts

1473. General 3-697
1475. Management Overview 3-697
1477. Air Carrier Compliance Alert Indicators 3-698
1479. Emphasis Areas 3-698
1481. Training Programs 3-698
1483. Manuals and Procedures 3-699
1485. Recordkeeping Systems 3-699
1487. Flightcrew Scheduling 3-699
1489. Operational Control 3-700
1491. Use of MEL and CDL 3-701
1492.-1550. Reserved 3-701

VOLUME 3. TABLE OF CONTENTS—Continued

Page

CHAPTER 9. PROVING AND VALIDATION TESTS

Section 1. Background

1551. General 3-717
1553. Proving Tests 3-717
1555. Validation Tests 3-717
1557. Testing Methods Acceptable to the Administrator 3-717
1559. Handbook Discussion of Proving and Validation Tests 3-718
1560.-1564. Reserved 3-718

Section 2. The Proving and Validation Test Process

1565. Phase One 3-725
1567. Phase Two 3-725
1569. Phase Three 3-726
1571. Phase Four 3-726
1573. Phase Five 3-726
1574.-1578. Reserved 3-726

Section 3. Proving Test Requirements

1579. General 3-743
1581. Situations Requiring Proving Tests 3-743
1583. Part 121 Applicant Proving Test Requirements 3-744
1585. Part 135 Applicant Proving Test Requirements 3-744
1587. Deviations to Proving Test Requirements 3-744
1589. Representative Number of Flights into Airports 3-744
1591. Carriage of Passengers and Cargo 3-745
1593. Crew Qualifications for Proving Tests 3-745
1595. WITHDRAWN—CHG 8 3-745
1597. Provisionally Certificated Aircraft 3-745
1598.-1602. Reserved 3-745

Section 4. Planning the Proving Test

1603. Applicant's Plan for Proving Tests 3-751
1605. Applicant's Plan for Reduced Proving Test Hours 3-751
1607. FAA Planning for Proving Tests 3-751
1609. WITHDRAWN—CHG 8 3-751
1611. Other Proving Test Participants 3-751
1613. Coordination 3-752
1615. Pre-Demonstration Test Meeting (FAA Team) 3-752
1616.-1622. Reserved 3-753

Section 5. Proving Tests: The Demonstration Phase

1623. General 3-759
1625. Conduct of En Route Flights 3-759
1627. Conduct of Other Flights 3-761
1629. Termination of the En Route Segment 3-761
1630.-1634. Reserved 3-761

Section 6. Reporting Procedures

1635. Report Construction 3-769
1637. Closing the Master Record 3-769
1638.-1642. Reserved 3-770

VOLUME 3. TABLE OF CONTENTS—Continued

Page

Section 7. Request for Deviation of Proving Flight Hours

1643. General 3-775
1645. Evaluating the Applicant's Request 3-775
1647. Coordination Requirements and Approval Authority for Proving Flight Deviations 3-776
1648.-1654. Reserved 3-777

Section 8. Validation Test Requirements

1655. General 3-783
1657. Situations Requiring Validation Tests or Flights 3-783
1659. Class II Navigation Authorizations 3-784
1661. Special Performance Authorizations 3-786
1663. Special Operational Authorizations 3-786
1665. Planning the Validation Tests 3-786
1667. Areas Evaluated on Validation Tests or Flights 3-787
1669. Carriage of Revenue Passengers on Validation Flights 3-787
1671. Special Authorizations Information Tables 3-788
1672.-1680. Reserved 3-788

CHAPTER 10. EMERGENCY EVACUATION AND DITCHING DEMONSTRATIONS

Section 1. General

1681. General 3-843
1683. Regulatory Requirements 3-843
1685. Increasing Seating Capacity by Analysis and Tests, FAR 25.803(d) 3-845
1687. Contents of this Chapter 3-846
1688.-1692. Reserved 3-846

Section 2. The Aborted Takeoff Emergency Evacuation Demonstration

1693. The Aborted Takeoff Demonstration: Phase One 3-859
1695. Briefing the Operator on Demonstration Requirements 3-859
1697. The Operator's Plan 3-861
1699. The Aborted Takeoff Demonstration: Phase Two 3-863
1701. The Aborted Takeoff Demonstration: Phase Three 3-863
1703. The Aborted Takeoff Demonstration: Phase Four 3-863
1705. The Aborted Takeoff Demonstration: Phase Five 3-864
1706.-1710. Reserved 3-864

Section 3. Aborted Takeoff Demonstration Procedures

1711. The Demonstration Team 3-868
1713. Predemonstration Meeting with Operator 3-868
1715. FAA Team Planning 3-868
1717. Selecting Exits 3-868
1719. Blocking Exits 3-869
1721. Initiation Signal 3-869
1723. Participants 3-869
1725. Predemonstration Inspection 3-869
1727. Predemonstration Briefings 3-870
1729. Conducting the Demonstration 3-871
1730.-1734. Reserved 3-874

Section 4. Ditching Demonstrations

1735. General 3-881
1737. Regulatory Requirements 3-881

VOLUME 3. TABLE OF CONTENTS—Continued

Page

1739. The Ditching Demonstration Plan 3-882
1741. Review of the Ditching Demonstration Plan 3-882
1743. Conduct of the Ditching Demonstration 3-882
1744.-1748. Reserved 3-883

Section 5. Evaluating Evacuation and Ditching Demonstrations

1749. Areas to be Evaluated 3-888
1751. Determining Results of Demonstrations 3-888
1752.-1754. Reserved 3-888

Section 6. Reporting Evacuation Demonstrations

1755. General 3-895
1757. FAA Form 8430-1 3-895
1759. Distribution 3-895
1760.-1764. Reserved 3-895

Section 7. Maximum Passenger Seating Capacity for Airplanes Used in Part 121 Operations

1765. Table of Maximum Demonstrated Seating Capacities 3-902
1766.-1770. Reserved 3-902

CHAPTER 11. OPERATOR RECORDKEEPING

Section 1. General

1771. General 3-951
1773. Characteristics of Information and Records 3-951
1775. Regulatory Requirements 3-951
1777. Definitions 3-952
1779. Mergers and Acquisitions 3-953
1780.-1790. Reserved 3-953

Section 2. Acceptance or Approval Process

1791. General 3-957
1793. Regulatory Requirements 3-957
1795. Guidelines for Approval or Acceptance 3-957
1796.-1806. Reserved 3-957

Section 3. Currency Periods for Records

1807. General 3-961
1809. Categories of Records 3-961
1811. Currency Periods for Recordkeeping Systems 3-961
1813. Recommended Advanced Qualification Program (AQP) Currency Periods 3-962
1814.-1826. Reserved 3-962

Section 4. Computer-Based Recordkeeping

1827. General 3-973
1829. Regulatory Requirements 3-973
1831. Guidelines for System Approval 3-973
1833. Granting Approval 3-975
1835. System Surveillance 3-975
1837. Additional System Capabilities 3-975
1838.-1850. Reserved 3-976

VOLUME 3. TABLE OF CONTENTS—Continued

Page

CHAPTER 12. ENVIRONMENTAL CONSIDERATIONS AND RESPONSIBILITIES

Section 1. Background Information

1851. The Public Law 3-981
1853. Environmental Responsibilities 3-981
1855. Availability of Assistance 3-981
1856.-1860. Reserved 3-981

Section 2. Aircraft Noise

1861. Pertinent Regulations and Orders 3-989
1863. Flight Standards Responsibilities 3-989
1865. Heavy Airplane Operators' Compliance with Approved Noise Abatement Departure Profiles (NADP) 3-990
1867. Airtour and Sightseeing Operations 3-990
1868. Reserved 3-992

Section 3. Environmental Assessments

1869. General 3-999
1871. Types of Action Requiring an EA by Field Inspectors 3-999
1873. Official Responsible for Accomplishing the EA 3-999
1875. Collection of Information 3-999
1877. Processing the EA 3-1000
1878.-1882. Reserved 3-1000

CHAPTER 13. LEASE AND INTERCHANGE AGREEMENTS

Section 1. General

1883. Background and Definitions 3-1007
1884.-1888. Reserved 3-1007

Section 2. Dry Lease Agreements

1889. General 3-1014
1890.-1894. Reserved 3-1014

Section 3. Wet Lease Agreements

1895. General 3-1021
1897. Processing Wet Lease Agreements 3-1021
1899. Determination of Operational Control 3-1021
1901. Amending Operations Specifications 3-1021
1902.-1906. Reserved 3-1022

Section 4. Interchange Agreements

1907. General 3-1029
1909. Approval Procedures 3-1029
1911. Amending Operations Specifications 3-1029
1912.-1916. Reserved 3-1029

CHAPTER 14. FLIGHT ATTENDANT TRAINING AND QUALIFICATION PROGRAMS

Section 1. Flight Attendant Training Curriculums

1917. Overview 3-1037
1919. Definitions 3-1037
1921. Training Programs: A Schematic Depiction 3-1038
1923. Categories of Training 3-1041

VOLUME 3. TABLE OF CONTENTS—Continued

		Page
1925.	Curriculum Development	3-1041
1926.-1934.	Reserved	3-1042
Section 2.	Flight Attendant Training Approval Process	
1935.	General	3-1049
1937.	Revisions to Training Curriculums	3-1049
1938.-1944.	Reserved	3-1049
Section 3.	Flight Attendant Basic Indoctrination Training Curriculum Segment	
1945.	General	3-1059
1947.	Basic Indoctrination Training Subject Areas	3-1059
1949.	Flight Attendant Basic Indoctrination Training Modules	3-1060
1951.	Operator-Specific Training Modules	3-1061
1953.	Flight Attendant-Specific Training Modules	3-1063
1955.	Curriculum Segment Completion Requirements	3-1064
1957.	Evaluation of Training Hours	3-1064
1959.	Evaluation of a Flight Attendant Basic Indoctrination Curriculum Segment Outline for Initial Approval	3-1064
1961.	Flight Attendant Basic Indoctrination Curriculum Segment Job Aid	3-1064
1962.-1972.	Reserved	3-1064
Section 4.	Flight Attendant General Emergency Training Curriculum Segment	
1973.	General	3-1073
1975.	General Emergency Training Subject Areas	3-1074
1977.	Content of F/A General Emergency Training Curriculum Segment Outline	3-1075
1979.	General Emergency Training Modules	3-1075
1981.	Emergency Equipment Training Modules	3-1077
1983.	Emergency Situation Training Modules	3-1079
1985.	Emergency Drill Training Modules	3-1082
1987.	Emergency Drills	3-1083
1989.	Adaptation of General Emergency Training Curriculum Segments to the Various Categories of Training	3-1087
1991.	Curriculum Segment Completion Requirements	3-1087
1993.	Evaluation of Training Hours	3-1087
1995.	Evaluation of Cabin and Exit Mockups	3-1088
1997.	Evaluation of F/A General Emergency Training Curriculum Segment Outline for Initial Approval	3-1088
1999.	F/A General Emergency Curriculum Segment Job Aid	3-1088
2000.-2010.	Reserved	3-1089
Section 5.	Flight Attendant Aircraft Ground Training Curriculum Segment	
2011.	General	3-1105
2013.	Aircraft Ground Training Curriculum Segment	3-1105
2015.	General Operational Subjects Training Modules	3-1106
2017.	Aircraft-Specific Emergency Subjects Training Modules	3-1114
2019.	Adaptation of Flight Attendant Aircraft Ground Training Curriculum Segment to the Various Categories of Training	3-1118
2021.	Curriculum Segment Completion Requirements	3-1118
2023.	Evaluation of Training Hours	3-1119
2025.	Evaluation of Flight Attendant Aircraft Ground Training Curriculum Segment Outline for Initial Approval	3-1119
2026.-2074.	Reserved	3-1119

VOLUME 3. TABLE OF CONTENTS—Continued

Page

CHAPTER 15. MANUALS, PROCEDURES, AND CHECKLISTS

Section 1. Background and Definitions

2075. Introduction 3-2055
2077. Overview of Manual Requirements 3-2055
2079. Definitions 3-2055
2081. Distribution and Availability of Manuals 3-2057
2083. Review of Manuals 3-2057
2085. Format and Style of Manuals 3-2058
2087. Adequacy of Procedures 3-2059
2088.-2098. Reserved 3-2060

Section 2. Approval and Acceptance of Manuals and Checklists

2099. General 3-2069
2101. Phase One: Establishing a Framework for Review 3-2069
2103. Phase Two: Preliminary Review 3-2071
2105. Phase Three: In-Depth Review 3-2071
2107. Phase Four: Validation Tests 3-2072
2109. Phase Five: Granting FAA Approval 3-2072
2111. Notification of Deficiencies 3-2073
2113. Emergency Revisions 3-2073
2114.-2124. Reserved 3-2074

Section 3. General Operations Manuals

2125. General 3-2081
2127. Content of General Operations Manuals 3-2081
2129. Operator Management Structure 3-2081
2131. Authorized Operations 3-2081
2133. Weight and Balance Procedures 3-2082
2135. Operational Control 3-2082
2137. Flight Planning 3-2083
2139. Notices to Airmen (NOTAM) and Pilot Reports (PIREP) 3-2083
2141. Restricted or Suspended Operations 3-2083
2143. International Operations 3-2083
2145. Observer's Seats 3-2084
2147. Line Station Operations 3-2084
2149. Passenger Briefing Procedures 3-2087
2151. Exit Seating Program 3-2088
2153. Use of Portable Electronic Devices 3-2088
2154.-2160. Reserved 3-2088

Section 4. Flight Manuals

2161. General 3-2095
2163. Approved Airplane Flight Manuals (AFM) or Approved Rotorcraft Flight Manuals (RFM) 3-2095
2165. Company Flight Manuals (CFM) 3-2096
2167. Aircraft Systems Description 3-2097
2169. Procedures 3-2097
2171. Normal Procedures 3-2098
2173. Maneuvers and Procedures Document 3-2099
2175. Nonnormal and Emergency Procedures 3-2099
2177. Immediate Actions 3-2099
2179. Mandatory Confirmation Items 3-2100

VOLUME 3. TABLE OF CONTENTS—Continued

Page

2181. Crewmember Roles 3-2100
2183. Operations Not Evaluated in Aircraft Certification 3-2101
2185. Limitations 3-2101
2186.-2196. Reserved 3-2101

Section 5. Aircraft Checklists

2197. General 3-2109
2199. Checklist Content 3-2109
2201. Methods of Checklist Design 3-2110
2203. Policies for Managing the Accomplishment of Checklists 3-2111
2205. Development and Sequencing of Checklist Items 3-2114
2207. Immediate Action Items 3-2114
2209. Checklist Terminology 3-2114
2211. Aircraft Differences 3-2115
2213. Sequencing Normal Checklists and Other Checklists 3-2115
2215. Checklist Format 3-2115
2216.-2226. Reserved 3-2116

Section 6. Approval and Acceptance of Flight Attendant Manuals and Checklists

2227. General 3-2123
2228.-2232. Reserved 3-2123

These types of selections provide two or three blank spaces; however, as many states, islands, or countries as appropriate can be entered. When editing these types of selections, the POI should insert proper punctuation and conjunctions.

(c) Other selections include or exclude certain types of airspace or areas that have specific operational requirements. The POI must determine whether the operator meets the specific operational requirements before making a selection that includes these types of airspace or areas.

(d) If the standard phraseology for a particular selection is not appropriate, the POI may develop an appropriate description of the area to be authorized. In these cases, the POI can delete the standard phraseology and insert the nonstandard description of the area of en route operation. For instance, the area of operation formerly listed as Soviet Russia is now comprised of a number of individual states or republics, most of which make up the Commonwealth of Independent States (C.I.S.). POI's should consult AFS-500 for guidance in the preparation of appropriate descriptions when carriers seek approval to operate in affected areas.

(e) Various regulations in FAR Parts 121 and 135 refer to the listing of routes or route segments in operations specifications. In today's airspace environment and aviation technology it is not practical or desirable to list each route an operator may need to use. Instead, authorized geographic or airspace areas of en route operation shall be listed in the operations specifications. However, at times it may be necessary to list individual routes in B50 due to special limitations or procedures associated with the routes. The routes should be described by beginning and ending points such as NAVAID's (or radials/bearings and distances from NAVAID's) or geographic coordinates. The route description should also describe the routing between the beginning and ending points with words such as "direct," "via 270° radial," or other appropriate descriptions. Descriptions of special limitations or procedures for each route must be developed for entry in the "Limitations, Provisions, and Reference Paragraphs" column of B50. Examples of limitations or procedures include MEA's, MAA's, or limitations that specify the type of navigation required, such as pilotage or station-referenced. After descriptions of the individual routes and associated limitations or procedures are developed, they must be entered into B50 at an appropriate location. Usually, these routes, limitations, or procedures should be entered directly below the area of en route operation selection within which the individual route is located. If the route transverses more than one area of en route operation, enter the route description directly below the area of en route operation selection in which the major portion of the route is located.

(3) After selecting the areas of en route operation to be authorized and appropriately editing those selections, the POI must properly edit the "Limitations, Provisions, and Reference Paragraphs" column of B50. The POI must ensure that the appropriate limitations, provisions, and/or reference paragraphs are specified for each area of en route operation selected.

(a) The computer will automatically print B31, B32, and B33 as reference paragraphs for each area of en route operation selected regardless of the type of operation. B32 is not applicable for FAR Part 135 VFR-only operations; therefore, it must be manually deleted for those types of operations. B33 is not applicable to FAR Part 135 VFR-only operations or to FAR Part 135 operators who do not operate turbojet airplanes, and must be manually deleted when it is not applicable. The best method for instructing the computer operator to manually delete a reference paragraph, when using the list of areas of en route operation, is depicted in the following example:

AUTHORIZED AREAS OF EN ROUTE OPERATION, LIMITATIONS, AND PROVISIONS	ALL OPERATORS
B50. From the following choices, select the areas of en route operation to be authorized by these operations specifications.	Ref. 3/149

AREAS OF EN ROUTE OPERATION	LIMITATIONS, PROVISIONS, AND REFERENCE PARAGRAPHS
1. Select the following as applicable.	
[✓] a. The 48 contiguous United States and the District of Columbia.	B31 and B32, ~~B33~~ (Note: this is an example for deleting B33 for a FAR Part 135 operator who does not operate turbojet airplanes)
[✓] b. The State~~(s)~~ of Texas, and Oklahoma ~~and~~ _____.	B31, ~~B32~~, ~~B33~~ (Note: this is an example for deleting B32 and B33 for a FAR Part 135 VFR-only operator)

(b) In certain areas of en route operation, reference paragraphs are mandatory (MNPS, B39; NOPAC, B38; CEPAC, B37; and, areas of magnetic unreliability, B40). The computer will automatically print these as reference paragraphs when these areas are selected. When B39, B38, or B37 are printed, B36 (long-range navigation system required) will also be printed as a reference paragraph. The POI must not manually delete these mandatory reference paragraphs when the operator is authorized to operate in these areas.

(c) Other applicable reference paragraphs must be manually added to a specific area of en route operation. These other reference paragraphs either specify a requirement such as long-range navigation equipment, or grant a specific authorization, such as use of area navigation equipment for Class I navigation. The POI must determine which reference paragraphs are pertinent to each area of en route operation and enter them in the "Limitations, Provisions, and Reference Paragraphs" column. These other reference paragraphs include the following:

- B34-"Class I Navigation Using Area Navigation Systems" (Add B34 when authorized only to areas where Class I navigation can be conducted.)
- B35-"Class I Navigation in the U.S. Class A airspace (formerly PCA—Positive Control Area) using an Area or Long-Range Navigation System" (When authorized add B35 only for "the 48 contiguous United States and the District of Columbia, and the state of Alaska.")
- B36-"Class II Navigation Using Long-Range Navigation Systems or a Flight Navigator" (Add B36 to all areas that require long-range navigation systems or a flight navigator. B36 must also be added to areas of magnetic unreliability when long-range navigation systems or a flight navigator is required for those areas.)
- B41-"North Atlantic Operations (NAT/OPS) With Two-Engine Airplanes under Part 121" (Add B41 only when authorized and only to a North Atlantic Ocean area of en route operation selection, items 4a, b, or c on the "list of areas of en route operation.")
- B42-"Extended-Range Operations With Two-Engine Airplanes (ETOPS) under Part 121" (Add B42 only when authorized and only to authorized ETOPS areas of en route operations.)

CHAPTER 1. OPERATIONS SPECIFICATIONS

SECTION 5. PART C—AIRPLANE TERMINAL INSTRUMENT PROCEDURES AND AIRPORT AUTHORIZATIONS AND LIMITATIONS

161. GENERAL. Part C is issued to operators who conduct Federal Aviation Regulations (FAR) Part 121 or 135 operations with fixed-wing airplanes. It is not issued to FAR Part 135 operators who conduct only helicopter operations. Instrument flight rules (IFR) helicopter operators are issued Part H. Part C is not usually issued to FAR Part 135 on-demand operators who are restricted to visual flight rules (VFR)-only operations. In rare situations, C70 is issued to FAR Part 135 VFR-only operators who are authorized to conduct commuter operations.

163. C51—TERMINAL INSTRUMENT PROCEDURES. C51 is issued to all airplane operators who conduct any flight operations under IFR. IFR operators whose operations are restricted to the 50 United States (U.S.) are only issued C51a(1), (2), and (3). The whole paragraph is issued to operators who are authorized to conduct any IFR operation outside of the U.S. Federal Aviation Administration (FAA) Order 8260.31, "Foreign Terminal Instrument Procedures," provides direction and guidance on acceptance of foreign terminal instrument procedures. Additional information concerning terminal instrument procedures is in volume 4, chapter 2, section 3.

165. C52—BASIC INSTRUMENT APPROACH PROCEDURE AUTHORIZATIONS—ALL AIRPORTS. C52 specifies the types of instrument approaches the operator is authorized to conduct and prohibits the use of other types of instrument approaches. Only the types of instrument approaches checked on the operations specifications worksheet for C52 will be printed in paragraph C52. If precision approaches are not authorized, C52b will not be printed. Before authorizing a type of instrument approach procedure (IAP), the principal operations inspector (POI) must ensure that the operator provides appropriate training for the types of approaches to be authorized. See volume 4, chapter 2, for information on required training for various types of approaches.

167. C53—IFR LANDING MINIMUMS OTHER THAN CATEGORIES II AND III—ALL AIRPORTS. C53 specifies the lowest minimums that can be used for Category I (CAT I) nonprecision approaches, precision approaches, and circling maneuvers. It prescribes conditions that must be met in order to conduct contact approaches. It also provides special limitations and provisions for IAP's at foreign airports. If an operator is not authorized to conduct precision approaches, the language of C53b will be automatically changed to prohibit the use of precision approaches. If the operator is not authorized to conduct operations outside the U.S., C53e will not be issued. See volume 4, chapter 2, for information on required training for circling maneuvers and contact approaches.

169. C54—SPECIAL LIMITATIONS AND PROVISIONS FOR INSTRUMENT APPROACH PROCEDURES AND IFR LANDING MINIMUMS.

A. General. C54 is issued to all operators conducting operations under FAR Part 121. It is also issued to operators who conduct turbine-powered airplane operations under FAR Part 135. It is not issued to FAR Part 135 operators who do not operate turbine-powered airplanes unless that operator also conducts operations under FAR Part 121. C54 specifies the runway visual range (RVR) landing minimum equivalent to the published RVR landing minimum that must be used by high minimum pilots (less than 100 hours in aircraft type). It also specifies that before a pilot-in-command (PIC) of a turbojet can conduct an instrument approach with visibility conditions reported to be below 3/4 mile or RVR 4000 (basic turbojet landing minimums), the PIC must be specifically qualified and authorized to use standard landing minimums. See volume 4, chapter 2, for information on the qualification and authorization requirements to use the standard landing minimums.

B. C54a. C54a expands the approved equipment list to include the use of flight directors (FD) by authorized operators flying "Special Aircrew and Aircraft Authorization Required" (special CAT I) minimums. CAT I approach charts may depict two blocks of minimums: the standard and the "Special Aircrew and Aircraft Authorization Required" minimums. At selected locations, POI's should allow authorized

operators to use the special minimums, provided an approved autopilot with automatic tracking capability (approach coupler), an approved Heads-Up Display (HUD), or FD, approved for CAT I operations, is used on the approach.

NOTE: At this time, the only approach that has been approved for the special minimums is the instrument landing system (ILS) approach to runway 21 Right at Detroit Metropolitan Wayne County Airport.

(1) FAA Approval. Both air carrier and private operators may continue to use the standard CAT I minimums without alteration of current authorizations or procedures; however, operators must obtain FAA approval to use the special CAT I minimums. To obtain this approval, field offices will issue authorizations to general aviation operators by using FAA Form 7711-1, "Certificate of Waiver or Authorization," and to air carrier operators by issuing operations specifications.

(2) Conditions of Approval. Before issuing an authorization to use special CAT I minimums, inspectors shall ensure that each operator meets the following conditions:

(a) Aircraft and Associated Aircraft Systems. The authorized aircraft must be equipped with an approved autopilot approach coupler, HUD, or FD system that provides guidance to decision height (DH). Inspectors must establish that the approach coupler, HUD, or FD are certified for use down to an altitude of 200 feet above ground level (AGL) or lower.

(b) Flightcrew Procedures. The PIC must use the automatic flight control guidance system (AFCGS), HUD, or FD to DH or to the initiation of a missed approach, unless visual references with the runway environment are established, thus allowing safe continuation to a landing. If the AFCGS, HUD, or FD malfunctions or becomes disconnected, the PIC may not descend below standard minimums unless the runway environment is in sight.

(c) Flightcrew Qualification. PIC's must have demonstrated proficiency using the AFCGS, HUD, or FD (as appropriate) on the most recent instrument proficiency check required in volume 4, chapter 2, section 5, paragraph 583B; FAR § 121.441; FAR § 135.297; FAR § 125.291; FAR § 61.57(e)(2); or FAR § 61.58 (as applicable).

(3) Amendment of Operations Specifications. POI's having certificate management responsibilities for operators that have received approval for use of the special CAT I minimums shall amend the affected operators' operations specifications by using instructions provided in Flight Standards handbook bulletin HBAT 93-07, "Operations Specifications (OpSpecs) Revision, 'Special Aircrew and Aircraft Authorization Required' CAT I Minimums."

171. C55—ALTERNATE AIRPORT IFR WEATHER MINIMUMS. C55 is issued to all FAR Part 121 and FAR Part 135 operators who conduct IFR operations with airplanes. This paragraph provides a two-part table from which the operator, during the initial dispatch or flight release planning segment of a flight, derives alternate airport IFR weather minimums in those cases where it has been determined that an alternate airport is required.

A. The first part of the table is for airports with at least one operational navigational facility providing a straight-in nonprecision approach procedure, or a straight-in precision approach procedure, or, when applicable, a circling maneuver from an IAP. The required ceiling and visibility is obtained by adding 400 feet to the CAT I height above touchdown (HAT) or, when applicable, the authorized height above airport (HAA) and by adding 1 statute mile (s.m.) to the authorized CAT I landing minimum.

B. The second part of the table is for airports with at least two operational navigational facilities, each providing a straight-in nonprecision approach procedure or a straight-in precision approach procedure to different suitable runways. The required ceiling and visibility is obtained by adding 200 feet to the higher CAT I HAT of the two approaches used and by adding 1/2 s.m. visibility to the higher authorized CAT I landing minimum of the two approaches used.

C. In some cases, it is possible to have higher alternate minimums when using two operational navigational facilities than when using one. For example, an airport with one straight-in nonprecision approach procedure with an HAT of 400 feet and 1 s.m. visibility would have alternate minimums of 800 feet and 2 s.m. visibility (400 feet + 400 feet and 1 s.m. + 1 s.m.). On the other hand, an airport with two straight-in approaches, one a straight-in precision approach with an HAT of 200 feet and 1/2 s.m. visibility and the other a straight-in nonprecision approach with an HAT of 700 feet and 1 s.m. visibility, would have alternate minimums of 900 feet and 1 1/2 s.m. visibility (200 feet + 700 feet and 1/2 s.m. + 1 s.m.). Since the operations specifications require that the higher ceiling and visibility be used, the minimums for the airport with two straight-in approaches are higher than for the airport with only one straight-in approach. When this situation exists, the operator may elect to consider the airport as having only one straight-in approach procedure and may add the higher buffer requirement (400 feet and 1 s.m.) to whichever

straight-in approach procedure provides for the lowest possible ceiling and visibility minimums.

D. Except for extended-range operations (ER-OPS), two suitable runways may be the different ends of the same physical runway surface (runway 4 and runway 22 are two different runways). When using an airport as an alternate in ER-OPS, in accordance with paragraph B42, two separate physical surfaces must be used. The word "suitable" is defined in Advisory Circular (AC) 120-42, "Extended Range Operation With Two-Engine Airplanes (ETOPS)," as amended.

173. C56—IFR TAKEOFF MINIMUMS, PART 121 OPERATIONS—ALL AIRPORTS. (for C56c: o/s 9b) C56 is issued to all operators who conduct operations under FAR Part 121. If an operator is not authorized to conduct operations outside of the U.S., C56d will not be printed for issuance. If an operator is not authorized to use lower-than-standard takeoff minimums, C56c and d will not be printed for issuance. See volume 4, chapter 2, section 7, for information concerning requirements an operator must meet before being authorized to use lower-than-standard takeoff minimums. If an operator conducts operations under both FAR Parts 121 and 135, C56 and C57 will be printed for issuance.

175. C57—IFR TAKEOFF MINIMUMS, PART 135 OPERATIONS—ALL AIRPORTS. (for C57c: o/s 11e; for C57d: o/s 11f) C57 is issued to all FAR Part 135 operators who conduct IFR airplane operations. Only C57a and b will be printed for issuance when an operator is not authorized to use lower-than-standard takeoff minimums. C57a, b, and c will be printed for issuance when the operator is authorized to use takeoff minimums equal to the lowest straight-in landing minimums (FAR § 135.225(h)). C57a, b, c, d, and e will be printed for issuance when the operator is authorized to use takeoff minimums lower than 1/2 mile or RVR 1800. C57d(4) will not be printed if the operator is restricted to operations only within the U.S. See volume 4, chapter 2, section 7, for information concerning requirements an operator must meet before being authorized to use lower-than-standard takeoff minimums. If an operator conducts operations under both FAR Parts 121 and 135, C56 and C57 will be printed for issuance.

177. C58—SPECIAL RESTRICTIONS FOR FOREIGN TERMINAL INSTRUMENT PROCEDURES. (o/s 5g) C58 is issued only when the POI (or region responsible for the geographic area where a foreign airport is located) finds it necessary to place special restrictions on a foreign terminal instrument procedure. These special restrictions to foreign terminal instrument procedures are applicable only to U.S. air carriers. The purpose of these special restrictions is to establish an equivalency between the foreign terminal instrument procedure and the International Civil Aviation Organization (ICAO) (PANS-OPS) or U.S. terminal instrument procedures (TERPS) criteria. FAA Order 8260.31, "Foreign Terminal Instrument Procedures," provides direction and guidance on how to place restrictions on foreign instrument procedures. This order also contains a list of foreign terminal instrument procedures that are currently restricted. If an operator conducts flights to any airport listed in this order, the POI must issue C58 with the name of the airport, airport identification, procedure identification, and special restrictions listed in the appropriate template.

179. C59—CATEGORY II (CAT II) INSTRUMENT APPROACH AND LANDING OPERATIONS. (o/s 7f) CAT II operations are evaluated in accordance with AC 120-29, "Criteria for Approving Category I and Category II Landing Minima for FAR 121 Operators," and this handbook (see volume 4, chapter 2). CAT II operations are approved by issuance of C59. All initial CAT II operations for each operator and each airplane used by that operator require regional office and AFS-400 review and concurrence before issuing C59. This concurrence is also required before amending C59 to include an airplane make/model/series (m/m/s) new to the operator. All reductions in CAT II operating minimums for each operator and aircraft require regional office concurrence.

A. Each airplane type (m/m/s) used in CAT II operations must be listed in subparagraph C59a. The lowest DH and lowest RVR authorized for each airplane type must also be specified. The following example illustrates the method for authorizing each airplane in C59a:

AIRPLANE TYPE (MAKE/MODEL/SERIES)	DH NOT LESS THAN	LOWEST AUTHORIZED RVR
AIRBUS 300 A300B4103	100 Ft.	1200
BOEING 727 217	150 Ft.	1600
DOUG DC9 31	150 Ft.	1600
DOUG DC9 32	150 Ft.	1600
DOUG DC9 51	150 Ft.	1600
DOUG DC9 81	100 Ft.	1200
LKHEED 1011 385114	100 Ft.	1200

B. The equipment required to conduct manually flown and/or automatically flown CAT II operations is specified by subparagraph C59b for each airplane m/m/s. The equipment required is established in accordance with the applicable FAR, the approved airplane flight manual (AFM) (if applicable) and AC 120-29. There are two acceptable methods of demonstrating that an airplane is airworthy for CAT II operations. These acceptable methods are "type design approval" obtained by a manufacturer, or an "operational demonstration" conducted by an operator. Consequently, there are two methods for specifying (in C59b) the equipment required for CAT II operations.

(1) Type Design Approval. The AFM (or flight manual supplement), for airplanes that have CAT II type design approval, contains a statement to the effect that the airborne systems have demonstrated the reliability and redundancy necessary for CAT II operations in accordance with AC 120-29 (or previous versions). These AFM's also specify that certain equipment is required for airworthiness approval of the various kinds of CAT II operations. Some of the approved flight manuals also indicate that acceptable CAT II performance was demonstrated both with, and without, (w/wo) certain equipment (for example "w/wo autothrottles "). AC 120-29 also specifies that certain types of equipment are required for operational approval of the various kinds of CAT II operations (manual/autopilot). Therefore, both the AFM and AC 120-29 must be considered in determining the additional equipment that must be listed (specified) in C59b. Figure 3.1.5.1. provides an illustration of how the additional equipment should be listed in C59b.

(a) Equipment that is explicitly required by the airplane certification regulations (FAR Parts 23 and 25), the operating regulations (FAR Parts 91, 121, and 135) and/or the AFM should not be listed in C59b. The standard text of C59b requires this equipment to be functional. Therefore, the additional equipment that must be listed (specified) in C59b is determined by cross-checking the types of equipment required by AC 120-29 for the kinds of CAT II operation proposed, against the equipment required by regulations and the AFM. The equipment to be listed in C59b as additional equipment is only that equipment required by AC 120-29 for the kind(s) of CAT II operations to be authorized that is not explicitly required by regulation and/or the AFM. This would include equipment such as autoland for B-747 operations below 1600 RVR. Additional guidance is in volume 3, chapter 2, section 5.

(b) When the AFM indicates acceptable performance both w/wo certain items of equipment (that are not explicitly required by AC 120-29), it must be determined how the operator intends to conduct CAT II operations and train flightcrews with those items of equipment. If the operator proposes to conduct operations both w/wo certain items of equipment (such as autothrottle, autopilot), flightcrews must be trained for both situations and the item of equipment does not need to be listed in C59b. If the operator proposes to conduct operations only when those items of equipment (w/wo) are functional, then those items of equipment must be listed in C59b.

(2) Operational Demonstration by the Certificate Holder. The operational demonstration method of assuring the airworthiness of CAT II equipment is only appropriate for airplanes and equipment that do not have CAT II type design approval. The operational demonstration must be conducted in accordance with AC 120-29. The additional equipment that must be specified in C59b is determined by considering the equipment required by the airplane certification regulations (FAR Parts 23 and 25); operating regulations (FAR Parts 91, 121, and 135); AC 120-29; and the equipment configuration used during the operational demonstration of airworthiness conducted

by the operator. Equipment required by the airplane certification regulations and operating regulations should not be listed in C59b. Equipment required by AC 120-29 and any other items of equipment essential to the CAT II equipment configuration used in the operational demonstration of airworthiness must be listed as additional equipment in C59b. Figure 3.1.5.2. illustrates how this type of additional equipment should be listed in C59b.

C. The kind of CAT II operation (manual and/or autopilot) must be specified for each item of equipment listed in C59b. This is accomplished by placing an "X" in the appropriate column adjacent to each item of equipment. If an item of equipment is applicable to both manual and autopilot, "X's" must be placed in both columns. If an item of equipment is applicable to one kind of CAT II operation, but not the other, an "X" must be placed in the applicable column with the other column left blank. If only one kind of CAT II operation is authorized, then the "X's" must be placed in the appropriate "Manual" or "Autopilot" column. See figures 3.1.5.1. and 3.1.5.2. for examples of how the items of equipment should be specified for the kind of CAT II operation.

FIGURE 3.1.5.1.
EXAMPLE OF CAT II ITEMS OF EQUIPMENT (TYPE DESIGN)

AIRPLANE MAKE/MODEL/SERIES	KIND OF CAT II OPERATION	
ADDITIONAL EQUIPMENT AND SPECIAL PROVISIONS	MANUAL	AUTOPILOT
Boeing 767 219 Boeing 767 223		
1. Two CAT ILS receivers	X	X
2. An independent FD and display for each pilot (L and R or C and R)	X	
3. A radio altimeter and display for each pilot	X	X
4. DH annunciator for each pilot	X	X
5. Windshield wiper for each pilot	X	X
6. One inner marker receiver and display for each pilot	X	X
7. Instrument failure detection and warning system	X	X

NOTE: THE FOLLOWING EQUIPMENT IS REQUIRED BY THE AFM AND SHOULD NOT BE LISTED IN C59b

- One engine inoperative with flaps 20 degrees and manual throttle or 2 engines operative
- One Autopilot
- Two EADI's
- Two IRU's in NAV mode
- Two sources of electrical power

FIGURE 3.1.5.2.
EXAMPLE OF CAT II ITEMS OF EQUIPMENT (DEMONSTRATED)

AIRPLANE MAKE/MODEL/SERIES	KIND OF CAT II OPERATION	
ADDITIONAL EQUIPMENT AND SPECIAL PROVISIONS	MANUAL	AUTOPILOT
NIHON YSII A200		
1. One low-range radio altimeter with an indicator for each pilot	X	X
2. Two CAT II ILS receivers	X	X
3. DH indicator light for each pilot	X	X
4. Both engines operating	X	X
5. Instrument failure warning system	X	X
6. An altitude gyro with calibrated pitch markings for each pilot	X	X
7. Two independent flight directors (not required for autopilot CAT II operation)	X	
8. Single flight director with dual displays (manual CAT II operation not authorized)		X
9. Dual axis autopilot		X
10. Windshield wipers for each pilot	X	X

CHAPTER 1. OPERATIONS SPECIFICATIONS

SECTION 6. PART H—HELICOPTER TERMINAL INSTRUMENT PROCEDURES AND AIRPORT AUTHORIZATIONS AND LIMITATIONS

211. GENERAL. Part H is issued to each operator who conducts Federal Aviation Regulations (FAR) Part 135 instrument flight rules (IFR) operations with helicopters. It is not issued to FAR Part 135 operators who conduct only fixed-wing airplane operations. Part H is not usually issued to FAR Part 135 on-demand helicopter operators who are restricted to visual flight rules (VFR)-only operations. In rare situations, operations specifications paragraph H120 is issued to FAR Part 135 VFR-only operators who are authorized to conduct commuter operations with helicopters.

213. H101—TERMINAL INSTRUMENT PROCEDURES. H101 is issued to all helicopter operators who conduct any flight operations under IFR. IFR operators whose operations are restricted to the 50 United States (U.S.) are only issued H101a(1), (2), and (3). The whole paragraph is issued to operators who are authorized to conduct any IFR helicopter operation outside of the U.S. Federal Aviation Administration (FAA) Order 8260.31, "Foreign Terminal Instrument Procedures," provides direction and guidance on acceptance of foreign terminal instrument procedures. Additional information concerning terminal instrument procedures is in volume 4, chapter 2.

215. H102—BASIC INSTRUMENT APPROACH PROCEDURE AUTHORIZATIONS—ALL AIRPORTS. H102 specifies the types of instrument approaches the helicopter operator is authorized to conduct and prohibits the use of other types of instrument approaches. Only the types of instrument approaches checked on the operations specifications worksheet for C52 will be printed in paragraph H102. If precision approaches are not authorized, H102b will not be printed. Before authorizing a type of instrument approach procedure, the principal operations inspector (POI) must ensure that the operator provides appropriate training for the types of approaches to be authorized. See volume 4, chapter 2, for information on required training for various types of approaches.

217. H103—IFR LANDING MINIMUMS OTHER THAN AIRBORNE RADAR AND CATEGORIES II AND III APPROACHES—ALL AIRPORTS. H103 specifies the lowest minimums that can be used for Category I (CAT I) nonprecision approaches, precision approaches, and circling maneuvers. It prescribes conditions that must be met in order to conduct contact approaches. It also provides special limitations and provisions for instrument approach procedures at foreign airports. If an operator is not authorized to conduct precision approaches, the language of H103b will be automatically changed to prohibit the use of precision approaches. If the operator is not authorized to conduct operations outside the U.S., H103e will not be issued. See volume 4, chapter 2, for information on required training for circling maneuvers and contact approaches.

219. H104—HELICOPTER EN ROUTE DESCENT AREAS (HEDA). (o/s 13j) H104 is issued to all operators authorized to conduct IFR helicopter operations using helicopter en route descent procedures within specified areas of operation. It is not issued to helicopter operators who are not authorized to use helicopter en route descent procedures. Figure 3.1.6.1. illustrates one method of authorizing use of a particular HEDA.

221. H105—ALTERNATE AIRPORT IFR WEATHER MINIMUMS. H105 is issued to all FAR Part 135 operators who conduct IFR operations with helicopters.

223. H106—IFR TAKEOFF MINIMUMS, HELICOPTER OPERATIONS—ALL AIRPORTS. (for H106c: o/s 13g; for H106d: o/s 13h) H106 is issued to all operators who conduct IFR helicopter operations under FAR Part 135. If an operator is not authorized to conduct operations outside of the U.S., H106d(3) will not be printed for issuance. If an operator is not authorized to use lower-than-standard takeoff minimums, H106d and e will not be printed for issuance. See volume 4, chapter 2, for information concerning requirements an operator must meet before

being authorized to use lower-than-standard takeoff minimums.

225. H107—SPECIAL RESTRICTIONS FOR FOREIGN TERMINAL INSTRUMENT PROCEDURES. (o/s 5g) H107 is issued only when the POI (or the region responsible for the geographic area where a foreign airport is located) finds it necessary to place special restrictions on a foreign terminal instrument procedure. These special restrictions to foreign terminal instrument procedures are applicable only to U.S. air carriers. The purpose of these special restrictions is to establish an equivalency between the foreign terminal instrument procedure and ICAO (PANS-OPS) or U.S. (TERPS) criteria. FAA Order 8260.31 provides direction and guidance on how to place restrictions on foreign instrument procedures. This order also contains a list of foreign terminal instrument procedures that are currently restricted. If an operator conducts flights to any airport listed in this order, the POI must issue H107 with the name of the airport, airport identifier, procedure identification, and special restrictions listed in the appropriate template.

227. H108—CATEGORY II (CAT II) INSTRUMENT APPROACH AND LANDING OPERATIONS. (In the operations specifications checklist, item o/s 7f will automatically select CAT II in the operations specifications.) CAT II operations are evaluated in accordance with volume 4, chapter 2, section 5, and are approved by issuance of paragraph H108. All initial CAT II operations for each operator and each aircraft used by that operator require regional office and AFS-400 review and concurrence before the issuance of H108. This concurrence is also required before the POI may amend H108 to include an aircraft make/model/series (m/m/s) new to the operator. All reductions in CAT II operating minimums for each operator and aircraft require regional office concurrence.

A. CAT II Approach and Landing Minimums and Authorized Aircraft. Each aircraft m/m/s used in CAT II operations must be listed in subparagraph H108a. The lowest decision height (DH) and lowest runway visual range (RVR) authorized for each aircraft must also be specified. Figure 3.1.6.2. illustrates the method for authorizing each aircraft in H108a.

B. Required CAT II Airborne Equipment. The flight instruments, radio navigation equipment, other airborne systems required by the applicable FAR, and the FAA-approved rotorcraft flight manual (RFM) for the conduct of CAT II operations must be installed and operational. The additional airborne equipment listed or referenced in figure 3.1.6.3. is also required and must be operational for CAT II operations. There are two acceptable methods of demonstrating that an aircraft is airworthy for CAT II operations: a "type design approval" obtained by a manufacturer, or an "operational demonstration" conducted by an operator.

(1) Type Design Approval. The RFM (or supplement), for aircraft that have CAT II type design approval, contains a statement to the effect that the airborne systems have demonstrated the reliability and redundancy necessary for CAT II operations, in accordance with the current guidance, Advisory Circular (AC) 120-29, "Criteria for Approving Category I and Category II Landing Minima for FAR 121 Operations," as amended. These approved RFM's and supplements also specify that certain equipment is required for airworthiness approval of the various kinds of CAT II operations. Some of the approved RFM's also indicate that acceptable CAT II performance was demonstrated both with and without (w/wo) certain equipment (for example w/wo autothrottles). AC 120-29 also specifies that certain types of equipment are required for operational approval of the various kinds of CAT II operations (manual/autopilot). Therefore, both the RFM and AC 120-29 must be considered in determining the additional equipment that must be specified in H108b. (See figure 3.1.6.3.)

(a) Explicitly Required Equipment. Equipment that is explicitly required by the aircraft certification regulations (FAR Parts 27 and 29), the operating regulations (FAR Parts 91 and 135) and/or the RFM should not be specified in H108b. The standard text of H108b requires this equipment to be functional.

(b) Non-Explicitly Required Equipment. When the RFM indicates acceptable performance both w/wo certain items of equipment not explicitly required by AC 120-29, the POI must determine how the operator intends to conduct CAT II operations and train flightcrews with those items of equipment. If the operator proposes to conduct operations both w/wo certain items of equipment (such as autothrottle, autopilot), flightcrews must be trained for both situations, and the item of equipment does not need to be listed in H108b. If the operator proposes to conduct operations only when those items of equipment are functional, then those items of equipment must be specified in H108b. (See figure 3.1.6.3.)

(2) Operational Demonstration by the Certificate Holder.

(a) Non-Type Design Equipment. The operational demonstration method of ensuring the airworthiness of CAT II equipment is only appropriate for aircraft and equipment that do not have CAT II type design approval. The certificate holder must con-

duct the operational demonstration in accordance with AC 120-29. The additional equipment that must be specified in H108b is determined by considering the equipment required by the rotorcraft certification regulations (FAR Parts 27 and 29), operating regulations (FAR Parts 91 and 135), AC 120-29, and the equipment configuration used during the operational demonstration of airworthiness conducted by the operator. Equipment required by the rotorcraft certification regulations and operating regulations should not be listed in H108b. Equipment required by AC 120-29 and any other items of equipment essential to the CAT II equipment configuration used in the operational demonstration of airworthiness must be listed as additional equipment in H108b. (See figure 3.1.6.3.)

(b) Manual/Autopilot Operations. Manual and/or autopilot operations must be specified for each item of equipment listed in H108b. The POI accomplishes this by placing an "X" in the appropriate column adjacent to each item of equipment. If an item of equipment is applicable to both manual and autopilot, X's must be placed in both columns. If an item of equipment is applicable to one kind of CAT II operation, but not the other, an X must be placed in the applicable column, with the other column left blank. If only one kind of CAT II operation is authorized, then the X's must be placed in the appropriate "Manual" or "Autopilot" column. See figure 3.1.6.3. for examples of how the items of equipment should be specified for the kind of CAT II operation.

C. Required RVR Reporting Equipment. These requirements are automatically issued in subparagraph H108c of the operations specifications.

D. Pilot Qualifications. These requirements are automatically issued in subparagraph H108d of the operations specifications.

E. Operating Limitations. These requirements are automatically issued in subparagraph H108e of the operations specifications.

F. Missed Approach Requirements. These requirements are automatically issued in subparagraph H108f of the operations specifications.

G. Authorized Landing Areas. Airports and runways for which an operator is authorized to conduct CAT II instrument approach and landing operations are specified by H108g. If the airport and runways are approved for CAT II operations in FAR Part 97, they should not be listed in H108g unless the POI determines that there is a need to specify a special limitation for an operator at a particular airport. If the CAT II approach procedure is published in the National Ocean Service (NOS) "Instrument Approach Procedures" flight information publication as a CAT II procedure, it is approved in FAR Part 97. Airports and runways not listed in FAR Part 97, but approved for operator use, must be specified in H108g.

229. H109—CATEGORY III (CAT III) INSTRUMENT APPROACH AND LANDING OPERATIONS. (In the operations specifications checklist, item o/s 7g will automatically select CAT III in the operations specifications.) CAT III operations are evaluated in accordance with AC 120-28, "Criteria for Approval of Category III Landing Weather Minima" (as amended), and this handbook (see volume 4, chapter 2, section 6). POI's approve CAT III operations by issuing paragraph H109. Before a POI may issue or amend paragraph H109, the POI must coordinate with and obtain written concurrence from the appropriate regional office and AFS-400. That written concurrence must contain each operation and each m/m/s of aircraft used by that operator.

A. CAT III Approach and Landing Minimums. The decision height/alert height (DH/AH) and lowest RVR authorized for each m/m/s of aircraft type must be specified in subparagraph H109a for the kinds of CAT III operations authorized. CAT IIIa fail-passive operations must use a 50-foot DH. Most CAT IIIa/IIIb fail-operational operations use a 50- or 100-foot DH. Use of a DH in conjunction with an AH for these operations is inappropriate. Sometimes, however, a DH is required for fail-operational CAT III operations (see AC 120-28). In these situations, a 50-foot DH or less should be specified. Use of an AH in these operations is inappropriate. Figure 3.1.6.4. illustrates the method for authorizing each aircraft in H109a.

B. Required CAT III Airborne Equipment. The equipment required to conduct CAT III operations for each aircraft m/m/s is specified by H109b and is established in accordance with the applicable FAR, the RFM, and AC 120-28 (as amended). The only acceptable method of demonstrating the airworthiness of an aircraft for CAT III operations is through type design approval obtained by a manufacturer. The RFM (or supplement), for aircraft that have CAT III type design approval, contains a statement to the effect that the airborne systems have demonstrated the reliability and redundancy necessary for CAT III operations, in accordance with AC 120-28. These RFM's also specify that certain equipment is required for airworthiness approval of the various kinds of CAT III operations. Some of the RFM's also indicate that acceptable CAT III performance was demonstrated both w/wo certain equipment (for example w/wo autothrottles). AC 120-28 also specifies that certain types of equipment are required for operational approval of the various kinds of CAT III operations. Therefore, the POI must consider both the RFM and

volume 4, chapter 2, section 6, of this handbook when determining the additional equipment to be specified in H109b. (See figure 3.1.6.5.)

(1) Additional Equipment. Equipment that is explicitly required by the rotorcraft certification regulations (FAR Parts 27 and 29), the operating regulations (FAR Parts 91 and 135), and the RFM should not be specified in H109b. The standard text of H109b requires this equipment to be functional. Therefore, the additional equipment that must be specified in H109b is determined by cross-checking the types of equipment required by AC 120-28 for the kind(s) of CAT III operation(s) proposed against the equipment required by the regulations and the RFM. The additional equipment to be specified in H109b is not only that explicitly required by the regulations and the RFM, but also that required by AC 120-28 and the direction of AFS-400.

(2) Special Provisions. When the RFM indicates acceptable performance both w/wo certain items of equipment (which are not explicitly required by AC 120-28 or AFS-400), the POI shall specify in H109b those items of equipment that the operator intends to use. If the operator proposes to conduct operations only when those w/wo items of equipment are functional, then those items of equipment must be specified in H109b.

C. Kinds of CAT III Operations. Fail-passive and/or fail-operational must be specified for each item of equipment listed in H109b for each aircraft type. POI's accomplish this by placing an "X" in the appropriate column adjacent to each item of equipment. If an item of equipment is applicable to more than one kind of operation, X's must be placed in appropriate columns. If an item of equipment is applicable to one kind of CAT III operation, but not the others, an X must be placed in the applicable column. The other columns for that item of equipment shall be left blank. If only one kind of CAT III operation is authorized (for example, CAT IIIa fail-operational), then the X's must be placed in the CAT IIIa fail-operational column. See figure 3.1.6.5. for an example of how the items of equipment should be specified for the various kinds of CAT III operations.

D. Pilot Qualifications. Minimum qualifications for rotorcraft pilots are automatically issued in subparagraph H109d of the operations specifications.

E. Operating Limitations. Limitations for rotorcraft operations are automatically issued in subparagraph H109e of the operations specifications.

F. Missed Approach Requirements. These requirements are automatically issued in subparagraph H109f of the operations specifications.

G. Authorized CAT III Airports and Runways. All airports and runways to which an operator is authorized to conduct instrument approach and landing operations are specified in subparagraph H109g. If the POI and AFS-400 determine that there is a need to specify special limitations for the operator at a particular airport (for example, SEA 16R), then those special limitations shall be specified in H109g. All CAT III airport and runway approvals are approved in accordance with FAA Order 8400.8, "Procedures for Approval of Facilities for FAR Part 121 and Part 135 CAT III Operations"; AC 120-28; and this handbook. Certain airports and runways (SEA, MSP, CVG, PIT) require AFS-400 evaluation and approval for each aircraft type. POI's must contact AFS-400 for further direction and guidance concerning the approval of CAT III airports and runways. Figure 3.1.6.6. illustrates how POI's should complete subparagraph H109g.

231. H110—FLIGHT CONTROL GUIDANCE SYSTEMS FOR AUTOMATIC LANDING OPERATIONS OTHER THAN CATEGORIES II AND III. (o/s 12d and 13n)

A. H110 authorizes an operator to use a flight control guidance system with automatic landing capabilities to touchdown. Before issuing H110, the POI must determine the following:

- The RFM permits use of the flight control guidance system (autoland system) to touchdown
- Training on the use of the flight control guidance system and autoland procedures is provided to flight crewmembers
- The operator continually maintains flight control guidance and autoland systems in accordance with an approved maintenance program for autoland operations

B. The helicopters (make/model) and the flight control guidance systems (manufacturer/model) authorized for this type of operation, must be listed in subparagraph H110a. Figure 3.1.6.7. is an example of how the helicopter and flight control guidance systems should be listed.

233. H111—MANUALLY FLOWN FLIGHT CONTROL GUIDANCE SYSTEM CERTIFIED FOR LANDING OPERATIONS OTHER THAN CATEGORIES II AND III. (o/s 12e and 13o) (TBD)

235. H112—INSTRUMENT APPROACH OPERATIONS USING AN AREA NAVIGATION SYSTEM. (o/s 12c and 13p) (TBD)

237. H113—SPECIAL TERMINAL AREA IFR OPERATIONS—AUTHORIZATIONS, LIMITATIONS, AND PROVISIONS. (o/s 5c or 5d) H-113 authorizes an operator to conduct the following types of special operations:

- Nonscheduled passenger and cargo and scheduled all-cargo terminal area IFR operations outside of controlled airspace
- Scheduled passenger terminal area IFR operations outside of controlled airspace and at locations without an operating air traffic control tower
- Use of special (non-FAR Part 97) instrument approach or departure procedures

A. Nonscheduled Operations. (o/s 5c or 5d) Before authorizing nonscheduled terminal area IFR operations outside of controlled airspace, the POI must determine that the operator has a method or procedure for obtaining and disseminating necessary operational information. This operational information must include the following:

- The airport is served by an authorized instrument approach procedure (and departure procedure when applicable)
- Applicable charts for crewmember use
- Operational weather data from an approved source for control of flight movements and crewmember use
- Status of airport services and facilities at the time of the operation
- Suitable means for pilots to obtain traffic advisories

B. Scheduled Operations. (o/s 5c) Before authorizing scheduled terminal area IFR helicopter operations outside of controlled airspace, or at airports without an operating air traffic control tower, the POI must obtain and list the following information in H113. A template for listing this information is on the operations specifications worksheet.

- Names of airports
- Source of weather information to be used by flightcrews (see volume 3, paragraphs 789 and 791)
- Sources of traffic and airport advisories

C. Sources of Traffic and Airport Advisories. Certificate holders may be authorized to use any two-way radio source of air traffic advisory information listed in the Airman's Information Manual (for operations in U.S. airspace) or equivalent aeronautical information publications (for foreign operations). These sources include common traffic advisory frequencies, unicom, multicom, and flight service stations. If an air traffic advisory source is also suitable for determining the status of airport services and facilities, it is the only source that needs to be listed in paragraph C64. When airport services and facilities information is on a different frequency than the traffic advisory frequency, both sources should be listed in paragraph C64. In those cases where two sources are listed at the same airport, inspectors must ensure that the operator's manuals have procedures that require pilots to continuously monitor and use the traffic advisory frequency when operating within ten nautical miles of the airport. The procedures should require communication concerning airport services and facilities to be completed while more than 10 miles from the airport. At some airports, no public use frequencies may be available. In those cases, a certificate holder must arrange for radio communication of essential information including surveillance of local or transient aircraft operations by ground personnel. Ground personnel who operate a company radio for airport status and traffic advisory must be able to view airspace around the airport.

D. Special Terminal Instrument Approach or Departure Procedures. (TBD)

239. H114—SPECIAL AIRPORT AUTHORIZATION, PROVISIONS, AND LIMITATIONS. (o/s 13a) (TBD)

241. H120—AIRPORTS AUTHORIZED FOR SCHEDULED OPERATIONS.

A. Under SFAR 38-2 paragraph 3, the operations specifications must prescribe the authorizations and limitations for each type of operation. All regular, provisional, and refueling airports shall be listed in the operations specifications of all operators conducting scheduled operations. This includes helicopter commuter operations. The operator may provide a list of these airports which can be incorporated into the operations specifications by reference to the list in H120.

B. If the airports are to be listed in H120, the operations specifications worksheet and computer provide a template for the information that must be listed. This information includes the following:

- Airport name
- Three-letter identifier of the airport, if available
- Aircraft authorized to use the airport (Normally, the operator's aircraft can be listed in

the seven spaces provided at the top of the "Authorized Aircraft" column.)

- A notation that the airport is a regular airport (R) for the type of aircraft authorized

C. Figure 3.1.6.8. is an example of how this information can be formatted:

NOTE: If an airport is designated as provisional, the regular airport for which it serves as a provisional airport must be annotated. (Except in unique situations, an airport should not be designated as a provisional airport if it is located more than 30 statute miles from the regular airport.)

D. If the operator provides a list of airports to be incorporated into H120, this list must provide the same type of information previously discussed. This list must be annotated with the effective date of the listing. The list does not need to be physically attached to H120, but it must be maintained on file in the certificate-holding district office (CHDO) with copies of the operator's operations specifications. If a list is provided by the operator, no entries should be made on the operations specifications worksheet or in the computer. If no entry is made, the computer will automatically print "See Attached Listing" below the text of H120.

E. H120 specifies that the operator must maintain a list of alternate airports that can be used. The list of alternates may be integrated into the list provided by the operator, if desired. If a separate list of alternate airports is maintained by the operator, it is not necessary for the FAA to maintain a copy. The POI, however, should occasionally inspect the list of alternates to determine airport and aircraft compatibility.

242.–260. RESERVED.

FIGURE 3.1.6.1.

Authorized Helicopter En Route Descent Areas	Lowest Authorized Altitude (LAA)	Remarks, Limitations, and Conditions
Eugene Island Block 191	400 Ft.	Increase LAA to 700 Ft. with radar altimeter or mapping radar inoperative

FIGURE 3.1.6.2.

AIRCRAFT TYPE MAKE/MODEL/SERIES	DH NOT LESS THAN	LOWEST AUTHORIZED RVR
BH-222	100 Ft.	1200
SK-76	150 Ft.	1600

FIGURE 3.1.6.3.
EXAMPLE OF CAT II ITEMS OF EQUIPMENT (TYPE DESIGN)

AIRCRAFT MAKE/MODEL/SERIES	KIND OF CAT II OPERATION	
ADDITIONAL EQUIPMENT AND SPECIAL PROVISIONS	MANUAL	AUTOPILOT
NOTE: THE POI MUST LIST ALL REQUIRED EQUIPMENT NOT SPECIFIED IN THE FAR, IN THE TYPE DESIGN APPROVAL, IN THE RFM, AND IN AC 120-29.		

NOTE: THE FOLLOWING EQUIPMENT IS REQUIRED BY THE RFM AND SHOULD NOT BE LISTED IN 108b

- One Autopilot
- Two EADI's
- Two IRU's in NAV mode
- Two sources of electrical power

FIGURE 3.1.6.4.

1. CATEGORY IIIa FAIL-PASSIVE OPERATIONS		
AIRCRAFT TYPE MAKE/MODEL/SERIES	DH/AH	LOWEST AUTHORIZED RVR
BH-222	50 DH	700

2. CATEGORY IIIa FAIL-OPERATIONAL OPERATIONS		
AIRCRAFT TYPE MAKE/MODEL/SERIES	DH/AH	LOWEST AUTHORIZED RVR
SK-76	100 AH	700

3. CATEGORY IIIb FAIL-OPERATIONAL OPERATIONS		
AIRCRAFT TYPE MAKE/MODEL/SERIES	DH/AH	LOWEST AUTHORIZED RVR
SK-76	100 AH	300

FIGURE 3.1.6.5.
EXAMPLE OF CAT III ITEMS OF EQUIPMENT

AIRCRAFT MAKE/MODEL/SERIES	KIND OF CAT III OPERATION			
	CAT IIIa		CAT IIIb	
ADDITIONAL EQUIPMENT/SPECIAL PROVISIONS	FAIL PASS	FAIL OP	RVR 600	BELOW 600
NOTE: THE POI MUST LIST ALL REQUIRED EQUIPMENT NOT SPECIFIED IN THE FAR, IN THE TYPE DESIGN APPROVAL, IN THE RFM, AND IN AC 120-29.				

FIGURE 3.1.6.6.

AIRPORT	RUNWAYS	SPECIAL LIMITATIONS
William B. Hartsfield Atlanta, GA (ATL)	8L, 8R	

FIGURE 3.1.6.7.

AIRCRAFT TYPE (MAKE/MODEL)	FLIGHT CONTROL GUIDANCE SYSTEM (MANUFACTURER/MODEL)
S-76	Astronautics P/N 131810
Bell 222	Sperry SHZ-222

FIGURE 3.1.6.8.

AIRPORT NAME	IDENT	AIRCRAFT AUTHORIZED					P. FOR IDENT
		SK61	BH222				
Albany County	ALB	R	R				
John F. Kennedy Intl.	JFK	R	R				
La Guardia	LGA	R	R				

[PAGES 3-114 THROUGH 3-122 RESERVED]

- Flight crewmember certification, training, and qualification requirements
- Medical certificates, physical examination, and fitness for duty requirements
- Flight control requirements (dispatch, flight release, or flight-locating)
- Flight duty and rest requirements
- Recordkeeping requirements
- Operational rules in FAR Part 91 and 121 or 135 (as appropriate) and any other applicable regulations
- Regulatory requirements for company manuals
- Other appropriate regulations such as flightcrew emergency authority, interference with crewmembers, and reporting requirements

C. Contents of Certificate and Operations Specifications.

- Regulatory basis in FAR Part 121 or 135 (as applicable) and Title 49, United States Code (U.S.C.) (formerly the Federal Aviation Act (FA Act) of 1958)
- Definitions, description, and organization of operations specifications
- Limitations and authorizations of operations specifications
- Description of certificate
- Description of FAA certificate-holding district office (CHDO) and responsibilities of FAA principal inspectors

379. AIRMAN-SPECIFIC TRAINING MODULES. The "airman-specific" training modules of the basic indoctrination curriculum segment contain training to ensure that a student will be able to enter subsequent ground and flight training curriculum segments. These modules address the appropriate portions of the operator's manual and standard practices of airmanship and flight procedures in other documents such as the "Airman's Information Manual" (AIM). The emphasis in airman-specific training is not aircraft-specific. It should relate to the operator's kind of operation and the family or families of aircraft used by the operator. The objective of airman-specific training is to ensure that the student has acquired the basic knowledge necessary for FAR Part 121 or 135 operations (as applicable). Examples of recommended training modules for the airman-specific subject area follow:

A. Company Flight Control.

- Dispatch, flight release, or flight locating systems and procedures (as applicable)
- Organization, duties, and responsibilities
- Weather and NOTAM information
- Company communications

B. Weight and Balance.

- Definitions (such as zero-fuel weight, moments, and inches of datum)
- General loading procedures and center of gravity computations
- Effects of fuel burn and load shifts in flight
- Weight and balance forms, load manifests, fuel slips, and other applicable documents

C. Aircraft Performance and Airport Analysis.

- Definitions (such as balanced field, VMC, obstruction planes, and maximum endurance)
- Effects of temperature and pressure altitude
- General TERPS criteria (obstacle clearance standards)
- Airport analysis system as appropriate to the type of operation and family or families of aircraft
- Effects of contaminated runways

D. Meteorology.

- Basic weather definitions (such as forecasts, reports, and symbols)
- Temperature, pressure, and winds
- Atmosphere moisture and clouds
- Air masses and fronts
- Thunderstorms, icing, and windshear

E. Navigation.

- Definitions (such as Class I, Class II navigation)
- Basic navigational instruments
- Dead reckoning and pilotage concepts and procedures
- Navigational aids
- VHF, VLF, and self-contained systems (as applicable)

F. Airspace and ATC Procedures.

- Definitions (such as precision approaches, airways, and ATIS)
- Description of airspace
- Navigation performance and separation standards
- Controller and pilot responsibilities
- ATC communications
- Air traffic flow control
- Wake turbulence recognition and avoidance

NOTE: There have been several accidents and incidents related to Boeing 757 (B-757) wake turbulence. Although the B-757 does not fit into the "heavy" classification of aircraft, it is being treated as such until a new classification determination is made. Each of these events occurred when the trailing aircraft was not being provided IFR traffic separation. To reduce the possibility of such occurrences, ATC started issuing "Wake Turbulence Cautionary Advisories" to VFR aircraft following B-757 aircraft. The FAA is studying wake turbulence to include pilot awareness, avoidance, and aircraft-specific procedures for a wake turbulence encounter. Pilots and operators should review information, procedures, and guidance contained in chapter 7, section 3, of the AIM and in Advisory Circular (AC) 90-23, "Aircraft Wake Turbulence." The FAA is not aware of any wake turbulence accidents occurring when pilots have observed AIM-recommended procedures or have utilized IFR traffic separation. Therefore, pilots should be encouraged to maintain the prescribed wake turbulence separation distances. Since wake turbulence is not unique to the B-757, all pilots should exercise caution when operating behind and/or below all heavier aircraft.

G. En Route and Terminal Area Charting and Flight Planning.

- Terminology of charting services (such as Jeppesen or NOAA)
- Takeoff minimums, landing minimums, and alternate requirements
- General company flight planning procedures
- Flight service and international procedures (as applicable)
- Airport diagrams

H. Concepts of Instrument Procedures.

- Definitions (such as MDA, HAA, HAT, DH, CAT II ILS, and NOPT)
- Holding patterns, procedure turns
- Precision approaches (such as CAT I, CAT II, and CAT III)
- Nonprecision approaches
- Circling, visual, and contact approaches (as applicable)

381. EVALUATION OF FLIGHTCREW BASIC INDOCTRINATION CURRICULUM SEGMENT OUTLINES FOR INITIAL APPROVAL. When evaluating a basic indoctrination curriculum segment, inspectors must determine that the operator-specific and airman-specific subject areas are properly addressed. Operator-specific and airman-specific elements may be outlined in the same training module. Inspectors must determine that basic indoctrination curriculum segments meet the following two requirements:

A. The operator-specific training must contain information of sufficient quality, scope, and depth to ensure that the crewmember fully understands the duties and responsibilities applicable to the duty position. Training modules must also provide enough information to acquaint the student with the operator's policies, procedures, and practices.

B. Airman-specific modules must address appropriate portions of the certificate holder's operating manual and other pertinent information. These modules should contain elements that address the operator's type of operation and certain generalized areas, such as meteorology and the principles of weight and balance. It is essential that the inspectors and operators understand that airman-specific training is not aircraft-specific training. Airman-specific training is intended to ensure that students have acquired fundamental aviation concepts before progressing into ground and flight training for a specific aircraft.

383. FLIGHT CREWMEMBER BASIC INDOCTRINATION CURRICULUM SEGMENT JOB AID.

A. The basic indoctrination curriculum segment job aid (table 3.2.3.2.) is provided to assist the inspector when evaluating this curriculum segment outline. This job aid is provided for guidance only and must not be construed as containing mandatory or regulatory requirements. This job aid focuses on the two subject areas of this curriculum segment (operator-specific and airman-specific training). It serves as an aid for inspectors when evaluating individual training modules.

B. When using the job aid, inspectors should make a side-by-side comparison of the operator's proposal to make the following determinations:

- The proposal provides for operator-specific and airman-specific instruction
- The proposal is generalized in nature, and serves to acquaint the student with the operator's procedures, policies, and practices
- Normally, training modules should not contain elements that are "aircraft-specific"
- Sufficient training module elements should be listed to ensure that the appropriate depth and scope of the material will be presented

C. The job aid is organized with training subjects listed in the left column and evaluation criteria or remarks listed horizontally across the top. Inspectors may use the spaces within the matrix for items such as notes, comments, dates, or checkmarks. There are also blank columns and rows in each job aid that permit inspectors to include additional training modules or evaluation criteria.

385. DRUG/ALCOHOL TESTING PROGRAM APPROVAL AND INCLUSION IN BASIC INDOCTRINATION TRAINING.

A. Drug/Alcohol Testing Programs. Each FAR Part 121 and 135 operator is required by FAR §§ 121.459, 135.255, and Appendices I and J of FAR Part 121 to submit for approval a plan for a drug testing program and alcohol misuse program to the Drug Abatement Division (AAM-800) of the FAA's Office of Aviation Medicine. Once the operator's drug/alcohol "plan" has been approved, it becomes known as the operator's drug/alcohol "program." The operator's drug testing and alcohol misuse program must include an Employee Assistance Program (EAP), which includes education and training on drug use and alcohol misuse prevention for employees and supervisors.

B. Responsibility for Approval, Surveillance, and Enforcement of Operator Drug/Alcohol Training Programs. AAM-800 is responsible for the approval, surveillance, and enforcement of drug/alcohol training plans and programs. AAM-800 personnel conduct audits and inspections of operator drug/alcohol training programs. POI's who receive drug/alcohol testing plans from operators should return them to the operator with instructions to submit them promptly to the FAA at the following address:

Federal Aviation Administration
Office of Aviation Medicine
Drug Abatement Division, AAM-800
400 7th Street, S.W.
Washington, D.C. 20591
(202) 366-6710

C. Inclusion of Operator Drug/Alcohol Training Programs as a Module in Basic Indoctrination and Recurrent Training Curriculum Segments. Operators may, but are not required to, include EAP training (part of the operator's overall drug/alcohol training program) as a module in the operator's basic indoctrination and recurrent training. POI's are not to review the EAP training module content or to conduct surveillance of the training conducted in the EAP training module either before or after the operator has submitted the module for approval to AAM-800.

(1) Credit for EAP Training Module Hours. Operators who have currently approved training curriculums and who wish to receive credit for EAP training hours should submit a revised outline for the basic indoctrination and recurrent training curriculum segment, including the EAP module, to the POI. The operator's outline must indicate the additional number of course hours required to include EAP training. POI's and operators may count these hours in the total hours of the basic indoctrination and recurrent training curriculum segment. The POI shall stamp the revised pages/control page of the curriculum segment outline according to the instructions in volume 3, paragraph 339.

(2) New Operator Awareness of EAP Training Requirements. Inspectors who are responsible for certifying new operators must ensure that the operators are aware that they may take credit for the training hours in the basic indoctrination curriculum segment. POI's must also ensure that the operators know of the EAP training requirements and approval process. POI's must ensure that an operator's proposed training hours are listed on the operator's basic indoctrination and recurrent training curriculum segment outline. POI's shall not grant final approval to the operator's basic indoctrination and recurrent training curriculum segment until the operator's EAP has received final approval by AAM-800.

D. Points of Contact. Should operators or POI's have question about EAP training program content or approval status, they should contact AAM-800 or the FAA regional Aviation Drug/Alcohol Abatement Program representative. See table 3.2.3.3.

386.–390. RESERVED

TABLE 3.2.3.2.
FLIGHTCREW BASIC INDOCTRINATION TRAINING JOB AID
SUBJECT AREA 1: OPERATOR-SPECIFIC TRAINING

TRAINING SUBJECTS	EVALUATION CRITERIA				
	ADEQUACY OF ELEMENTS/ EVENTS	ADEQUACY OF COURSEWARE	TRAINING AIDS AND FACILITIES		
Company History, Organization, and Description					
Operational Concepts, Scope, and Policy					
General Forms, Records, and Administrative Procedures					
Employee Standards and Rules of Conduct					
Employee Compensation and Benefits					
Contracts					
Overview of FAR					
Certificate and Operations Specifications					
Company Manuals					
Flight Control					
Weight and Balance					

TABLE 3.2.3.2.—Continued
FLIGHTCREW BASIC INDOCTRINATION TRAINING JOB AID
SUBJECT AREA 2: AIRMAN-SPECIFIC TRAINING

TRAINING SUBJECTS	EVALUATION CRITERIA				
	ADEQUACY OF ELEMENTS/ EVENTS	ADEQUACY OF COURSEWARE	TRAINING AIDS AND FACILITIES		
Principles of Weight and Balance					
Performance and Airport Analysis					
Principles of Meteorology					
Principles of Navigation					
Airspace and ATC Procedures					
En Route/Terminal Charting and Flight Planning					
Instrument Procedures					

TABLE 3.2.3.3.
FAA REGIONAL AVIATION DRUG/ALCOHOL ABATEMENT PROGRAM REPRESENTATIVE ADDRESSES, TELEPHONE NUMBERS, AND STATES COVERED

1.	FAA/Alaskan Region (AAL-300) 222 West 7th Avenue Anchorage, Alaska 99513-7587 (907) 271-4514	Alaska	
2.	FAA/Central Region (ACE-300) 601 East 12th Street Kansas City, Missouri 64106 (816) 426-5097	Iowa Kansas Missouri Nebraska	
3.	FAA/Eastern Region (AEA-300) Federal Building JFK International Airport Jamaica, New York 11430 (718) 553-1994	Delaware Maryland New Jersey New York	Pennsylvania Virginia Washington D.C. West Virginia
4.	FAA/Great Lakes Region (AGL-300) 2300 East Devon Avenue Des Plaines, Illinois 60018 (708) 298-5970	Illinois Indiana Michigan Minnesota	North Dakota Ohio South Dakota Wisconsin
5.	FAA/New England Region (ANE-300) 12 New England Executive Park Burlington, Mass 01803 (617) 238-7301	Connecticut Maine Massachusetts New Hampshire	Rhode Island Vermont
6.	FAA/Northwest Mt. Region (ANM-300) 1601 Lind Avenue, SW Renton, Washington 98055-4056 (206) 227-2300	Colorado Idaho Montana Oregon	Utah Washington Wyoming
7.	FAA/Southern Region (ASO-300) 3400 Norman Berry Drive East Point, Georgia 30344 (404) 305-6175	Alabama Florida Georgia Kentucky Mississippi North Carolina South Carolina	Tennessee (ASO includes Canal Zone, Puerto Rico, Virgin Islands.)
8.	FAA/Southwest Region (ASW-300) 2601 Meachum Blvd Fort Worth, Texas 76137-4298 (817) 222-5305	Arkansas Louisiana New Mexico Oklahoma	Texas
9.	FAA/Western Pacific Region (AWP-300) P.O. Box 92007 World Ways Postal Center Los Angeles, California 90009 (310) 297-1301	Arizona California Hawaii Nevada	(AWP includes American Samoa, Mariana Islands, Marshall Islands.)

[PAGES 3-213 THROUGH 3-216 RESERVED]

CHAPTER 2. TRAINING PROGRAMS AND AIRMAN QUALIFICATIONS

SECTION 4. FLIGHTCREW GENERAL EMERGENCY TRAINING CURRICULUM SEGMENTS

391. GENERAL. There are two types of emergency training that Federal Aviation Regulations (FAR) Parts 121 and 135 operators must provide to flight crewmembers. One type is "aircraft-specific." This type of emergency training includes instruction and practice in emergency and abnormal procedures associated with aircraft systems, structural design, and operational characteristics. This training provides pilots and flight engineers with the knowledge and skills necessary to perform the emergency or abnormal procedures specified in the approved airplane flight manual (AFM) (or those AFM procedures incorporated in the operator's aircraft operating manual). Examples of such procedures are those used when engine, landing gear, flight control, and/or pressurization problems occur. "Aircraft-specific" also includes training on the location of specific items of emergency equipment on the aircraft, such as fire extinguishers, oxygen bottles, liferafts, life vests and first aid kits. Aircraft-specific training must be included in the aircraft ground and flight training curriculum segments as described in sections 4 and 5 of this chapter. The other type of emergency training is referred to as "general emergency training." General emergency training is required for crewmembers on each item specified in FAR §§ 121.417 and 135.331. This section provides direction and guidance on the content, methods of presentation, evaluation, and approval of flightcrew general emergency training.

A. Two distinct subject areas of training are required in the conduct of general emergency training. These areas of training are "emergency drill" training and "emergency situation" training. The general emergency training curriculum segment must contain training modules that provide for training in both subject areas.

(1) "Emergency drill" training provides instruction and practice in the actual use of certain items of emergency equipment, such as fire extinguishers, life vests, oxygen bottles, and first aid equipment.

NOTE: The discharge of Halon extinguishing agents during firefighting drills is not appropriate unless a training facility is used that is specifically designed to prevent harm to the environment from the discharged Halon. When such facilities are not used, other fire extinguishing agents that are not damaging to the environment should be used during the drills.

(2) "Emergency situation" training consists of instruction on the factors involved, as well as the procedures to be followed, when emergency situations occur. Examples include passenger evacuations, ditching, rapid decompressions, aircraft fires, and persons needing first aid.

B. The training modules for general emergency training must address the type of operation performed by an operator. For example, if a company operates aircraft above 25,000 feet, crewmembers must receive instruction in subjects such as respiration, hypoxia, decompression sickness, and any related procedures. As another example, a company that does not conduct extended-overwater operations does not need to conduct training in the use of liferafts.

393. GENERAL EMERGENCY TRAINING CURRICULUM SEGMENTS.

A. FAR Part 121. All FAR Part 121 operators must develop and obtain approval of a general emergency training curriculum segment for the initial new-hire category of training. FAR Part 121 operators using both Group I (propeller-driven) and Group II (turbojet) aircraft must develop a general emergency training curriculum segment for flight crewmembers required to receive initial equipment training on an aircraft in a different group for the first time. FAR Part 121 operators may elect (or principal operations inspectors (POI) may require them) to develop a separate general emergency training curriculum segment for flight crewmembers required to receive initial equipment training on an aircraft in the same group. In this situation, the decision to develop a separate general emergency training curriculum segment

should be based on the complexity of the operation, the extent of the differences in the flight regimes of the aircraft involved, and the extent of differences in the emergency equipment and procedures associated with the aircraft involved.

B. FAR Part 135. All FAR Part 135 operators must develop and obtain approval of a general emergency training curriculum segment for the initial new-hire category of training. FAR Part 135 operators may elect (or POI's may require them) to develop a separate general emergency curriculum segment for flight crewmembers required to receive the initial equipment category of training. In this situation, the decision to develop a separate general emergency training curriculum segment should be based on the complexity of the operation, the extent of the differences in the flight regimes of the aircraft involved, and the extent of differences in the emergency equipment and procedures associated with the aircraft involved. For example, an operator who operates both reciprocating-powered and turbojet-powered aircraft may need to develop separate general emergency training curriculum segments for incorporation into the initial equipment category of training appropriate for these types of aircraft.

C. Transition and Upgrade Training—FAR Parts 121 and 135. There is not a requirement for a separate general emergency curriculum segment for the transition and upgrade categories of training. For these categories of training, flight crewmembers will have previously received the appropriate general emergency training during initial new-hire training or, when appropriate, initial equipment training. Aircraft-specific emergency training must be included in the transition or upgrade aircraft ground and flight training curriculum segments.

D. Recurrent Training—FAR Parts 121 and 135. FAR Parts 121 and 135 operators must develop and obtain approval of a separate general emergency training curriculum segment for the recurrent category of training. Usually it will be appropriate to have two general emergency curriculum segments, one that reflects a 12-month cycle of emergency situation training and another that reflects a 24-month cycle of emergency drill (actual hands-on) training. See paragraph 395. It is acceptable, however, to incorporate the emergency drill "hands-on" training into a single curriculum segment provided it clearly requires that flight crewmembers receive the emergency drill (hands-on) training at least once each 24 months.

E. Requalification Training—FAR Parts 121 and 135. Whether a general emergency curriculum segment is required for the requalification category of training is dependent on the purpose of the requalification training. In general, if the purpose of the requalification training is to requalify flight crewmembers who have been unqualified for more than 1 year, a general emergency training curriculum segment should be required.

395. RECURRENT GENERAL EMERGENCY TRAINING. FAR Parts 121 and 135 operators are required to conduct recurrent general emergency training. This curriculum segment is separate from the aircraft ground recurrent training curriculum segment. Recurrent general emergency training consists of "emergency situation" and "emergency drill" training modules.

A. Recurrent general emergency training for FAR Parts 121 and 135 operators consists of all the items contained in FAR § 121.417 and FAR § 135.331 respectively. This training must be conducted every 12 months, usually at the same time that aircraft ground recurrent training is conducted.

B. The emergency situation training modules that are part of the recurrent general emergency training curriculum segment must include at least the following:

- Rapid decompression (if applicable)
- In-flight fire (or on-the-surface) and smoke control procedures
- Ditching and evacuation situations
- Illness, injury, the proper use of first aid equipment, and other abnormal situations involving passengers or crewmembers

C. The emergency drill training modules, which require the crewmember to actually operate the items of emergency equipment (hands-on), must be conducted at least every 24 months. During the alternate 12-month periods, the emergency drill training may be accomplished by pictorial presentation or demonstration. The emergency drill training modules that are part of the recurrent general emergency training curriculum segment must include at least the following:

- Operation of emergency exits (such as floor-level, overwing, and tail cone) in the normal and emergency modes
- Operation of each type of hand-held fire extinguisher
- Operation of each type of emergency oxygen system
- Donning, use, and inflation of life preservers and other flotation devices (if applicable)

- Ditching procedures (if applicable), including cockpit preparation, crew coordination, passenger briefing, cabin preparation, the use of life lines, and boarding of passengers and crew into a liferaft or slideraft, as appropriate

D. The following illustration serves to clarify the chronological order of recurrent general emergency training requirements:

TYPE OF RECURRENT GENERAL EMERGENCY TRAINING REQUIRED	MONTHS SINCE FIRST GENERAL EMERGENCY TRAINING CURRICULUM SEGMENT WAS COMPLETED			
	12 MONTHS	24 MONTHS	36 MONTHS	48 MONTHS
Emergency Situation Training	X	X	X	X
Emergency Drill (either hands-on or pictorial presentation/demo)	X	X	X	X
Emergency Drill (hands-on required)		X		X

397. GENERAL EMERGENCY TRAINING MODULES.

A. A general emergency training curriculum segment must include as many training modules as necessary to ensure appropriate training. Each module outline must provide at least the following information:

- A descriptive title of the training module
- A list of the related elements or events that will be presented during instruction on the module

B. The training module outline must contain sufficient elements or events to ensure that a student will receive training on the emergency equipment and procedures common to all of the operator's aircraft and the type of operation being conducted.

C. It is unnecessary to include detailed descriptions of each element within a training module outline. Such detailed descriptions are appropriate when included in the operator's courseware, such as lesson plans. During the approval process, the POI should review courseware as necessary to ensure that the scope and depth of the training modules are adequate. An example of one of the many acceptable methods of presenting a general emergency training module outline follows:

---

3. AIRCRAFT FIRES

(a) Principles of combustion and classes of fires
(b) Toxic fumes and chemical irritants
(c) Use of Halon, CO_2, and water extinguishers
(d) Lavatory fires
(e) Smoke masks and goggles

FYI: In the preceding illustration, such items as engine fire procedures, electrical fire procedures, and the location of each fire extinguisher are intentionally not included. These elements or events are included in the aircraft ground and flight training curriculum segments.

D. The following example illustrates the interrelationship of training modules in the flight crewmember general emergency training curriculum segment:

IV. FLIGHT CREWMEMBER GENERAL EMERGENCY TRAINING CURRICULUM SEGMENT — *Title of Curriculum Segment*

A. Training Objective: — *Statement of Training Objectives*

B. Emergency Situation Training: — *Title of Subject Area*

1. Crewmember Duties and Responsibilities
2. Crewmember Coordination and Company Communication
3. Aircraft Fires
4. First Aid Equipment
5. Illness, Injury, and Basic First Aid
6. Ground Evacuation
7. Ditching
8. Rapid Decompression
9. Previous Aircraft Accidents/ Incidents
10. Crewmember Incapacitation
11. Basic Survival Training

— *Training Modules Within a Curriculum Segment*

8. Rapid Decompression

(a) Respiration
(b) Hypoxia, Hypothermia, and Hyperventilation
(c) Time of Useful Consciousness
(d) Gas Expansion/Bubble Formation
(e) Physical Phenomena and Actual Incidents

— *Elements Within a Training Module*

399. TRAINING HOURS. A minimum number of training hours for general emergency training curriculum segments is not specified in FAR Parts 121 and 135. When approving these curriculum segments, the FAA must consider the complexity of the type of operation and the complexity of the aircraft used. When approving general emergency training curriculum segments, POI's should use table 3.2.4.1. as a guide. The table includes a list of national norms for the initial new-hire general emergency training hours. The training hours for a complex type of operation may need to exceed the national norm while training hours below the national norm may be acceptable for a less complex type of operation. National norms have not been established for initial equipment or recurrent general emergency training.

TABLE 3.2.4.1.
INITIAL NEW-HIRE FLIGHT CREWMEMBER GENERAL EMERGENCY TRAINING HOURS

AIRCRAFT FAMILY	TYPE OF OPERATION	TRAINING HOURS
FAR Parts 121 and 135 Transport and Commuter Category	All	8
General Purpose Multiengine Airplanes	Land Operations	4
	Extended Overwater	6
	Uninhabited Environment	6
Single-Engine Airplanes	Land Operations	2
	Extended Overwater	4
	Uninhabited Environment	6
Helicopters	Land Operations	4
	Extended Overwater	6
	Uninhabited Environment	6

401. COURSE COMPLETION REQUIREMENTS. Completion of the curriculum segment must be documented by an instructor's or supervisor's certification that the student has successfully completed the course. The certification is usually based on the results of a written examination given at the end of the course. With some training methods, the certification may be based on student progress checks administered during the course.

403. CONTENT OF FLIGHT CREWMEMBER GENERAL EMERGENCY TRAINING CURRICULUM SEGMENTS. A general emergency training curriculum segment must indicate that training will be given, appropriate to the operator's type of operation, in two distinct areas. These areas of training are "emergency situation" and "emergency drill" training.

405. EMERGENCY SITUATION TRAINING MODULES. Emergency situation training modules provide instruction, demonstration, and practice in the handling of emergency situations. Examples of recommended training modules for the emergency situation subject area follow:

A. Flight Crewmember Duties and Responsibilities.

- Emergency assignments
- Captain's emergency authority
- Reporting incidents and accidents

B. Crew Coordination and Company Communication.

- Cabin crew notification procedures
- Ground agency notification procedures (FAA, Airport Authority)
- Company communication procedures

C. Aircraft Fires.

- Principles of combustion and classes of fire
- Toxic fumes and chemical irritants
- Use of appropriate hand-held extinguishers
- Lavatory fires
- Smoke masks and goggles

D. First Aid Equipment.

- Contents of first aid kit
- Requirements for first aid kit integrity
- Use of individual items

E. Illness, Injury, and Basic First Aid.

- Principles of CPR
- Ear and sinus blocks
- Seeking medical assistance
- Treatment of shock
- Heart attack and pregnancy situations

F. Ground Evacuation.

- Aircraft configuration
- Directing passenger flow
- Blocked or jammed exit procedures
- Fuel spills and other ground hazards
- Handicapped persons

G. Ditching.

- Cockpit and cabin preparation
- Passenger briefing
- Crew coordination
- Primary swells, secondary swells, and sea conditions
- Ditching heading and water landings
- Ditching at night

H. Rapid Decompression.

- Respiration
- Hypoxia, hypothermia, hyperventilation
- Time of useful consciousness
- Gas expansion/bubble formation
- Physical phenomena and actual incidents

I. Previous aircraft accidents/incidents.

- NTSB accident report reviews
- Human factors/considerations
- NASA reporting system

J. Crewmember incapacitation.

- Company procedures
- Reporting requirements (NTSB)
- Interference with crewmembers

K. Hijacking and Other Unusual Situations.

- Hijack procedures
- Bomb threat procedures
- Security coordinator responsibilities
- In-flight intercept signals and procedures

407. EMERGENCY DRILL TRAINING MODULES. The area of a general emergency training curriculum segment referred to as emergency drill training provides instruction, demonstration, and practice in the actual operation of certain items of emergency equipment. Examples of recommended training modules for the emergency drill training subject area are as follows:

A. Hand-Held Fire Extinguishers.

- Inspection tags, dates, and proper charge levels
- Removal and stowage of extinguishers
- Actual discharge of each type of extinguisher
- Maintenance procedures and minimum equipment list (MEL)

B. Portable Oxygen Systems.

- Inspection tags, dates, and pressures
- Removal and stowage of oxygen bottles
- Actual operation of each type of bottle and each type of mask

C. Emergency Exits and Slides.

- Actual operation (open and close) of each exit in the normal and emergency modes
- Instruction on slide or slideraft deployment, transfer from one door to another, and detachment from the aircraft (or training device) of each type of slide or slideraft (if applicable)
- Actual use of slide or slideraft (This requirement needs to be accomplished only once during initial new-hire or initial equipment training.)

D. Ditching Equipment (if applicable).

- Actual donning, use, and inflation of individual flotation means (life preservers)
- Instruction on liferaft removal from the aircraft and inflation of each type of liferaft
- Instruction on the use of life lines
- Actual boarding of a liferaft or slideraft
- Instruction on survival equipment

409. RECURRENT GENERAL EMERGENCY TRAINING MODULES. Recurrent general emergency training consists of elements and events (in the form of training modules) that are selected by the operator and approved by the POI. These training modules consist of emergency situation training elements and emergency drill training events.

A. During alternate 12-month periods, when emergency drill (actual hands-on) training is not required, operators may use approved pictorial presentations or demonstrations. When approving pictorial presentations, the POI shall ensure that the presentation meets the following criteria:

(1) The equipment shown in each pictorial presentation must be functionally identical to the equipment on board the aircraft.

(2) The pictorial display of equipment must be large enough to be properly viewed by the whole class.

(3) All procedures must be accurately and logically presented.

(4) All emergency equipment not actually demonstrated during the course of instruction must be presented pictorially.

B. Every 24 months each crewmember must receive emergency drill (actual hands-on) training. This means each crewmember must actually perform each drill or procedure and must actually operate each piece of emergency equipment specified in paragraph 407. Certain hands-on emergency drill events must be conducted in a static aircraft or in an approved cabin/exit mockup training device.

411. CABIN AND EXIT MOCKUPS. Hands-on emergency drill training for items such as emergency exits and passenger oxygen systems should be conducted in a static aircraft, in an approved cabin mockup training device, or by use of an approved exit mockup training device. Cabin and exit mockup training devices should be representative of a full-scale section of an aircraft. Cabin mockups should include operational doors, window exits, slides, rafts, and other equipment used in emergency drill training. POI's shall not approve cabin or exit mockup training devices without an inspection to determine the adequacy of the devices. Generally, cabin and exit mockup training devices are acceptable if they meet the following criteria:

A. Cabin mockups should be representative of the operator's aircraft with appropriate equipment installed.

B. Cabin mockups should be full-scale, except for length.

C. The forces required to open the exit mockups should duplicate normal and emergency conditions with the slides or slideraft installed.

D. The mechanisms and instructions required to operate the exits should be representative of the operator's aircraft.

413. EVALUATION OF FLIGHT CREWMEMBER GENERAL EMERGENCY TRAINING CURRICULUM SEGMENT OUTLINES FOR INITIAL APPROVAL. When evaluating a general emergency training curriculum segment for initial approval, inspectors must determine that the training modules contain information of sufficient quality, scope, and depth to ensure that the flight crewmember can perform emergency duties and procedures without supervision. Inspectors should use the job aid in this section when evaluating the proposed curriculum segment outline.

415. FLIGHT CREWMEMBER GENERAL EMERGENCY TRAINING JOB AID.

A. The flight crewmember general emergency training job aid (table 3.2.4.2.) is provided to assist the inspector when evaluating this curriculum segment. The regulatory requirements of FAR Parts 121 and 135 general emergency training are contained in this job aid. The job aid covers the two subject areas of general emergency training, "emergency situation" and "emergency drill" training, and is intended to assist the inspector in evaluating individual training modules.

B. When using this job aid, the inspector should make a side-by-side comparison of the operator's proposal to make the following determinations:

- Whether training modules provide for training on the required elements and events in terms of flight crewmember duties and procedures
- Whether sufficient training module elements and events are outlined to ensure that the appropriate depth and scope of the material will be presented

FYI: Although some elements and events in general emergency training are "aircraft-specific" (such as exits and slides or sliderafts), the majority of the elements and events should apply to the operator's aircraft fleet.

C. The job aid is organized with the training subjects listed in the left column and evaluation criteria listed horizontally across the top. Inspectors may use the spaces within the matrix for items such as notes, comments, dates, and checkmarks. There are also blank columns and rows in the job aid that permit inspectors to add other training modules or evaluation criteria.

416.–424. RESERVED.

TABLE 3.2.4.2.
FLIGHT CREWMEMBER GENERAL EMERGENCY TRAINING JOB AID
SUBJECT AREA 1: EMERGENCY SITUATION TRAINING

TRAINING SUBJECTS	EVALUATION CRITERIA				
	ADEQUACY OF ELEMENTS/ EVENTS	ADEQUACY OF COURSEWARE	TRAINING AIDS AND FACILITIES		
Duties & Responsibilities					
Crew Coordination					
Aircraft Fires					
First Aid Equipment					
Illness, Injury, and Basic First Aid					
Ground Evacuation Ditching Procedures					
Rapid Decompression					
Previous Accidents and Incidents					
Basic Survival Training					

TABLE 3.2.4.2.—Continued
FLIGHT CREWMEMBER GENERAL EMERGENCY TRAINING JOB AID
SUBJECT AREA 2: EMERGENCY DRILL TRAINING

TRAINING SUBJECTS	EVALUATION CRITERIA				
	ADEQUACY OF ELEMENTS/ EVENTS	ADEQUACY OF COURSEWARE	TRAINING AIDS AND FACILITIES		
Hand-Held Fire Extinguishers					
Emergency Oxygen System					
Emergency Exits and Slides *					
Life Preservers					
Ditching Procedures **					

* NOTE: 1. Each crewmember is only required to participate in one emergency evacuation using a slide during initial new-hire or initial equipment training.

** NOTE: 2. Crewmembers are not required to deploy, remove, detach, transfer, or inflate slides or sliderafts on the aircraft or training device.

[PAGES 3-226 THROUGH 3-232 RESERVED]

A. FAR §§ 121.424 and 121.425 specify programmed hours of flight training for pilots and flight engineers enrolled in the initial new-hire and initial equipment categories of training. It is national direction and guidance that the training hours specified for any FAR Part 121 pilot-in-command (PIC), second-in-command (SIC), or flight engineer (FE) flight training curriculum segments shall not be less than the programmed hours specified by FAR §§ 121.424(c) and 121.425(b). Table 3.2.6.1. lists the FAR Part 121 programmed hours.

TABLE 3.2.6.1.
FAR PART 121 REGULATORY PROGRAMMED HOURS
FAR-Programmed Hours By Category Of Training

		Initial New-Hire			Initial Equipment		
		PIC	SIC	FE	PIC	SIC	FE
Part 121 Airplane Groups	Group I (Reciprocating)	10	6	6	10	6	6
	Group I (Turboprop)	15	7	7	15	7	7
	Group II (Turbojet)	20	10	10	20	10	10

B. FAR § 121.427(d)(1) and (2) stipulate that programmed hours are not specified for pilot or flight engineer recurrent flight training. However, if the flight training is conducted in an approved airplane flight simulator, FAR § 121.409(b)(1) requires at least 4 hours of training at the pilot controls for PIC and SIC training. Four hours of training are required regardless of whether the training is conducted on the events listed in FAR Part 121, Appendix F, or the training is conducted under an approved line-oriented flight training (LOFT) program.

C. FAR Part 121 does not specify programmed hours for the other categories of training. FAR Part 135 does not specify programmed hours for any of the categories of training. The number of training hours must be specified, however, on all flight training curriculum segment outlines. Because of the various situations that can be encountered, it is difficult to provide guidance on acceptable training hours for flight training curriculum segments. POI's must thoroughly study an operator's proposals. Based on experience with the operator, past experiences with other operators, as well as their own training experiences, POI's must use reasonable judgment when determining whether the training can be adequately accomplished within the training hours specified by the curriculum segment.

D. When flight training is conducted in a flight simulator or training device, it is acceptable and preferable for the flight training curriculum segment to be developed so that two pilots can be trained during a single flight training session. This includes the training of a PIC and SIC, two PIC's, or two SIC's at the same time. During this type of training, one pilot (pilot A) manipulates the controls of the aircraft while the other pilot (pilot B) performs the duties of the "pilot-not-flying" (PNF) the aircraft. During the same training session, the pilots reverse roles. Pilot B manipulates the controls, and pilot A performs the duties of the PNF. The duties of the PNF are typically included in the operator's aircraft operating manuals and/or in the maneuvers and procedures document. These duties include normal, abnormal, and emergency duties (that are performed by the PNF) and the crew participation activities (crew resource management (CRM) concepts) used by the operator. Both pilots are receiving essential "crew-concept" training throughout the training session. Therefore, the total training hours accomplished during the training session can be credited to each of the participating pilots. For example, if a PIC and an SIC participated in a 4-hour flight simulator session, both pilots would receive 4 hours of training credit. This method of crediting training hours is valid only when both student pilots manipulate the controls for approximately equal amounts of time. This method of crediting training hours is not valid when the instructor is providing instruction and also is occupying one of the pilot seats of the flight simulator, flight training device, or aircraft. This method of crediting training hours is also not valid for LOFT. Both recurrent and qualification LOFT training sessions should be based on at least 4 hours of total crewmember training activity. All crewmembers who participate in a LOFT training ses-

sion are credited with 4 hours of training time, as follows:

(1) Two Trainees. When the crew consists of two PIC trainees or two SIC trainees, both pilots should receive full credit (4 hours), provided the following conditions are met:

- The LOFT session conforms to the minimum 4-hour format described in Advisory Circular (AC) 120-35, "Line Operational Simulations: Line-Oriented Flight Training, Special Purpose Operational Training, Line Operational Evaluation"
- At least 2 1/2 hours are spent in the flight segment
- The pilots swap seats at approximately the midpoint in the LOFT flight segment

(2) One Trainee. When only one trainee participates in qualification LOFT, that trainee should receive full credit (4 hours), provided the following conditions are met:

- The LOFT session conforms to the minimum 4-hour format described in AC 120-35
- At least 2 1/2 hours are spent in the flight segment

NOTE: A 2-hour qualification LOFT session for one pilot does not meet the training requirements of FAR Part 121, Appendix H. A qualification LOFT program consists of at least a 4-hour course of training for each flightcrew.

E. Tables 3.2.6.2. and 3.2.6.3. specify established national norms for flight training curriculum segments. These norms are based on the assumption that there is reasonable training support, such as proficient instructors and well-organized flight instructor guides. The national norms in table 3.2.6.2. are for flight training when most or all of it is being conducted in a flight training device or flight simulator, and when two pilots are being trained at the pilot controls during the same training session (see subparagraph D). The national norms in table 3.2.6.3. are for flight training when only one pilot is being trained in a flight training device or flight simulator, or when flight training is conducted entirely in an aircraft.

F. When determining the adequacy of flight training hours, a POI should use these national norms as a point from which other factors shall be weighed. There may be many reasons why the training hours need to be greater than the national norm. The operator may need to specify more hours because of the complexity of the aircraft or types of operation. The POI may need to require more hours because of inadequate training support. Conversely, training hours fewer than the national norm may be fully acceptable due to the use of highly sophisticated, modern training methods, effective systems integration in aircraft ground training, less complex aircraft, or the conduct of a less complex type of operation. Some factors that would indicate a need for more training hours may be counterbalanced by other factors indicating that fewer training hours are necessary. The following diagram illustrates some of the factors that should be considered when determining the adequacy of flight training hours:

Special Operations	No Special Operations
New Entrant Operator	Basic Servo/Mechanical Instruments
Complex Pilot Operation of Aircraft Systems, Engines, Propellers	Pilot Experience with Similar Aircraft
Critical Aircaft Performance	Modern Simulators and Training Devices
EFIS, FMS, Autoflight	Well Organized Flight Instructor Guides
Dissimilar Flightcrew Experience Levels	Basic Navigation System
Low Visibility Capabilities	Simple Flight Handling Characteristics
Complex Navigation Systems	Effective System Integration Training

More than National Norm	National Norm	Less than National Norm

TABLE 3.2.6.5.—Continued
FLIGHT TRAINING
PIC/SIC TRANSITION AND UPGRADE FLIGHT TRAINING: TRANSPORT AND COMMUTER CATEGORY AIRPLANES (BACK)

FLIGHT PHASE	TRAINING EVENT	LEVEL OF FLT TRNG DEVICE				LEVEL OF FLT SIM				ACFT
		4	5	6	7	A	B	C	D	
				ATD		VIS	PH I	PH II	PH III	
APPROACHES (Cont'd)	MISSED APPROACHES M From Precision Approach					X	X	X	X	X
	From Nonprecision Approach					X	X	X	X	X
	With Powerplant Failure					X	X	X	X	X
	NOTE: At least one MAP must be a complete approved procedure. At least one MAP must be with a powerplant failure.									
LANDINGS	Normal							X	X	X
	With Pitch Mistrim PIC					X	X	X	X	X
	From Precision Instrument Approach							X	X	X
	From Precision Instrument Approach With Most Critical Engine Inoperative							X	X	X
	With 50% Loss of Power on One Side PIC (2 engines inoperative on 3-engine airplanes					X	X	X	X	X
	With Flap/Slat Malfunction					X	X	X	X	X
	Crosswind							X	X	X
	With Manual Reversion/Degraded Control Augmentation					X	X	X	X	X
AFTER LANDING	Parking #							X	X	X
	Emergency Evacuation #			X	X	X	X	X	X	X
OTHER FLIGHT	Holding			X	X	X	X	X	X	X
PROCEDURES	Ice Accumulation On Airframe #			X	X	X	X	X	X	X
DURING ANY	Air Hazard Avoidance #				A	A	X	X	X	X
AIRBORNE PHASE	Windshear/Microburst #					X	X	X	X	X
SYSTEMS	Pneumatic/Pressurization	A	A	X	X	X	X	X	X	X
PROCEDURES	Air Conditioning	A	A	X	X	X	X	X	X	X
TRAINING	Fuel and Oil	A	A	X	X	X	X	X	X	X
DURING ANY	Electrical	A	A	X	X	X	X	X	X	X
PHASE	Hydraulic	A	A	X	X	X	X	X	X	X
	Flight Controls	A	A	X	X	X	X	X	X	X
	Anti-Icing and Deicing Systems			X	X	X	X	X	X	X
	Autopilot		A	X	X	X	X	X	X	X
-Normal	Flight Management Guidance Systems and/or Automatic or Other Approach & Landing Aids		A	X	X	X	X	X	X	X
-Abnormal	Stall Warning Devices, Stall Avoidance Devices, and Stability Augmentation Systems			X	X	X	X	X	X	X
-Alternate	Airborne Weather Radar	A	A	X	X	X	X	X	X	X
	Flight Instrument System Malfunction		A	X	X	X	X	X	X	X
	Communication Equipment	A	A	X	X	X	X	X	X	X
	Navigation Systems	A	A	X	X	X	X	X	X	X
SYSTEMS	Aircraft Fires	A	A	X	X	X	X	X	X	X
PROCEDURES	Smoke Control	A	A	X	X	X	X	X	X	X
TRAINING	Powerplant Malfunctions	A	A	X	X	X	X	X	X	X
DURING ANY	Fuel Jettison	A	A	X	X	X	X	X	X	X
PHASE	Electrical, Hydraulic, Pneumatic Systems	A	A	X	X	X	X	X	X	X
	Flight Control Systems Malfunction	A	A	X	X	X	X	X	X	X
-Emergency	Landing Gear and Flap Systems Malfunction	A	A	X	X	X	X	X	X	X

503. PIC/SIC RECURRENT FLIGHT TRAINING (RFT): TRANSPORT AND COMMUTER CATEGORY AIRPLANES.

A. Required Maneuvers and Procedures. Training in the maneuvers and procedures in table 3.2.6.6., in accordance with the following paragraphs, must be conducted for the satisfactory completion of recurrent flight training.

(1) FAR Part 135 RFT. FAR Part 135 RFT must be conducted periodically for both PIC's and SIC's, at least once every 12 months. FAR § 135.351(c) specifies that RFT for pilots must include at least, "flight training in the maneuvers or procedures in this subpart, except that satisfactory completion of the check required by § 135.293 (the competency check) . . . may be substituted for recurrent flight training." The competency check may include any of the maneuvers and procedures currently required for the original issuance of the particular pilot certificate, for the operations authorized, and appropriate to the category, class, and type of aircraft involved. The instrument proficiency check, as specified in FAR § 135.293(c), may be substituted for the competency check. Additionally, there are no provisions in FAR Part 135 that allow recurrent training to substitute for required checks or tests. There are no training appendices in FAR Part 135 containing lists of the required maneuvers and procedures for flight training or checking. Training on the events in the applicable tables in this section meets the FAR Part 135 competency and instrument proficiency check requirements and, therefore, the RFT requirements.

NOTE: When training or evaluating the ability of a pilot to control an aircraft on instruments and to navigate without reference to outside cues, the inspector, check airman, or instructor must restrict the pilot's vision to the aircraft's instrument panel. This can only be ensured with the use of an appropriate view-limiting device. When a flight simulator is not available for training or checking, the dilemma is how to safely perform these maneuvers under the "see and be seen" requirements of visual meteorological conditions (VMC) flight and still be able to accurately assess the pilot's ability to control and navigate an aircraft without reference to outside cues. On one hand, the use of a view-limiting device must not restrict the ability of the check airman or other observers to safely clear the area and conduct outside vigilance during all maneuvers. On the other hand, the check airman must be certain that the pilot is not using any outside references. In final analysis, the check or training should not be conducted if the requirements of safety and test integrity cannot be met (see also volume 5, paragraph 133).

(2) FAR Part 121 RFT. FAR Part 121 RFT is training that must be conducted for PIC's once each 6 months and for SIC's once each 12 months, and must include training on the maneuvers and procedures listed in Appendix F of FAR Part 121. Levels B, C, and D flight simulators qualify for "training and checking to proficiency" on all the maneuvers and procedures required for RFT by FAR Part 121. RFT can always be conducted in an airplane. A proficiency check (FAR § 121.441) may be substituted for RFT.

(3) FAR Part 121 Level-A RFT. Level-A RFT is training that is conducted in a visual simulator. Level-A RFT is referenced in several different ways in FAR Part 121. The following are examples: "A course of training in an airplane simulator" (FAR § 121.409(b)); "flight training program approved by the administrator" (FAR § 121.427(d)(1)); and "the approved simulator course of training" (FAR §§ 121.433(c)(2) and 121.441(a)). For the purpose of standardization and mutual understanding, the term "level-A recurrent flight training" or "level-A RFT" should be used in reference to this type of training when it is conducted entirely in a visual simulator. Level A flight simulators are not qualified to be used for "training to proficiency" on certain maneuvers listed in Appendix F (such as takeoffs and landings). However, level A flight simulators can be used for training and practice on the procedures used to accomplish these maneuvers. These maneuvers are annotated by a "C" in the Recurrent Flight Training Maneuvers and Procedures Table (table 3.2.6.6.). Level-A RFT may be substituted for alternate periods of RFT (required by FAR § 121.433(c)(2)) or for alternate proficiency checks (required by FAR § 121.441(e)), provided the person being trained is evaluated by a check airman during the subsequent proficiency check (for PIC's once each 12 months; for SIC's once each 24 months). The proficiency check may be conducted in a level A (visual) simulator, provided the person being checked is evaluated during the conduct of two landings on the line (or other check) by a check airman (or, for SIC's, by a line PIC). The entire proficiency check (without the landings on the line requirement) may be conducted in a level B, C, or D simulator.

B. Training Emphasis Considerations. Operators should develop RFT and Level-A RFT curriculum segments that serve to maximize training on certain maneuvers and procedures. An airman's competency to function in an assigned duty position is evaluated during an annual proficiency check (or a competency check). During that check, at least the events required by FAR Part 121, Appendix F (for FAR Part 121

operators), and any of the events required for the original issuance of the particular pilot certificate involved (for FAR Part 135 operators) must be accomplished. The RFT curriculum outline should address all the required training events listed in table 3.2.6.6. However, during RFT or level-A RFT, specific training on every event is unnecessary unless it is needed for maintaining pilot proficiency on particular events. It is national direction and guidance that during periods of RFT or level-A RFT, that training emphasis should be on those events or other maneuvers or procedures not normally encountered during routine line operations, such as abnormal or emergency procedure training or windshear training. Additionally, training on new or revised maneuvers or procedures, new equipment, or other similar areas is ideally suited for periods of RFT or level-A RFT. Time should be allotted to conduct training in maneuvers or procedures the airman wishes to practice, or in certain operational areas in which deficiencies have surfaced during proficiency or line checks, indicating a need for additional training.

NOTE: Even though all of the maneuvers and procedures may not be accomplished during RFT or level-A RFT, the RFT curriculum segment outline should address all of the required training events listed in table 3.2.6.6.

TABLE 3.2.6.6. FLIGHT TRAINING
PIC/SIC RECURRENT FLIGHT TRAINING: TRANSPORT AND COMMUTER CATEGORY AIRPLANES (FRONT)

FLIGHT PHASE	TRAINING EVENT	LEVEL OF FLT TRNG DEVICE				LEVEL OF FLT SIM				ACFT
		4	5	6	7	A	B	C	D	
				ATD		VIS	PH I	PH II	PH III	
PREPARATION	Visual inspection (Use of pictorial display authorized)									X
	Pretaxi Procedures		X	X	X	X	X	X	X	X
	Performance Limitations	A	A	X	X	X	X	X	X	X
SURFACE OPERATION	Pushback	A	A	X	X	X	X	X	X	X
	[ ] Powerback Taxi					X	X	X	X	X
	Starting			X	X	X	X	X	X	X
	Taxi					C	C	X	X	X
	Pretakeoff Checks	A	A	X	X	X	X	X	X	X
TAKEOFF	Normal M					C	C	X	X	X
	Crosswind					C	C	X	X	X
	Rejected M			X	X	X	X	X	X	X
	Power Failure V_1 M					X	X	X	X	X
	Powerplant Failure During Second Segment #					X	X	X	X	X
	[ ] Lower than Standard Minimum					X	X	X	X	X
CLIMB	Normal			X	X	X	X	X	X	X
	One-Engine Inoperative During Climb to En Route Altitude #					X	X	X	X	X
EN ROUTE	Steep Turns PIC			X	X	X	X	X	X	X
	Approaches to Stalls: M (Takeoff Config.) (En Route Config.) (Landing Config.) X* Only if stall warning/stall avoidance provides first stall indication			X*	X*	X	X	X	X	X
	In-flight Powerplant Shutdown	A	A	X	X	X	X	X	X	X
	In-flight Powerplant Restart		A	X	X	X	X	X	X	X
	High Speed Handling Characteristics					X	X	X	X	X
DESCENT	Normal			X	X	X	X	X	X	X
	Maximum Rate			X	X	X	X	X	X	X
APPROACHES	**VFR Procedures** Normal					C	X	X	X	X
	With 50% Loss of Power on One-Engine PIC M (2 engines inoperative on 3-engine airplanes)					X	X	X	X	X
	With Slat/Flap Malfunction PIC M					X	X	X	X	X
	IFR Precision approaches M ILS/Normal					X	X	X	X	X
	ILS/One-Engine Inoperative					C	X	X	X	X
	[ ] MLS/Normal					X	X	X	X	X
	[ ] MLS/One-Engine Inoperative					C	X	X	X	X
	[ ] PAR/Normal			X	X	X	X	X	X	X
	[ ] PAR/One-Engine Inoperative #					X	X	X	X	X
	IFR Nonprecision Approaches M NDB/Normal			A*	A	X	X	X	X	X
	VOR/Normal A* At least one nonprecision approach must be accomplished in a level A or higher simulator or the aircraft			A*	A	X	X	X	X	X
	Nonprecision Approach One Engine Inoperative #					X	X	X	X	X
	[ ] LOC Backcourse Procedures		A	X	X	X	X	X	X	X
	[ ] SDF/LDA Procedures		A	X	X	X	X	X	X	X
	[ ] TACAN Procedures		A	X	X	X	X	X	X	X
	[ ] ASR Procedures		A	X	X	X	X	X	X	X
	[ ] RNAV Procedures		A	X	X	X	X	X	X	X
	[ ] GPS Procedures		A	X	X	X	X	X	X	X
	[ ] **Circling Approach M** (Simulator must be qualified for training/checking on the circling maneuver)					X	X	X	X	X

(4) Line Check Pilot—Observer's Seat Only. An inspector must evaluate a candidate for this type of check airman designation while the candidate conducts an actual line check, either in revenue or nonrevenue service, from the forward jumpseat. When the evaluation is conducted in revenue operations, in an aircraft with only one jumpseat, a candidate who holds a second class medical (and who has not yet reached 60 years of age for FAR Part 121 operations) may be evaluated while conducting a line check from the right pilot seat. In this case, the pilot-in-command (PIC) must be fully qualified. When the evaluation is conducted in nonrevenue operations in an aircraft with only one available jumpseat, a candidate who holds a third class medical or who is over 60 years of age (FAR Part 121 operations) may be evaluated while conducting a line check from the right pilot seat. A check airman who is designated to conduct line checks from the observer's seat and who does not maintain line currency, must be evaluated by an inspector at least once every 12 calendar months. Therefore, the letter approving this type of designation must contain an expiration date not later than 12 calendar months from the date of the evaluation. If an evaluation within this time period is not given, the check airman is not authorized to conduct line checks.

(5) Check Pilot—All Checks. An inspector must evaluate a check airman candidate for this designation in accordance with paragraphs 645, 647, 649 (if applicable), 651, 653, and 655. The evaluations for this designation may be cumulative. For example, an airman may have been a proficiency check pilot—aircraft for a number of years and then qualify as a line check pilot—all seats. If the operator does not use flight simulators in the training program, then, upon completion of the line check evaluation, the check airman would be designated to conduct all checks.

(6) Check Flight Engineer—Airplane. An inspector must evaluate a candidate for a check flight engineer—airplane designation while the candidate conducts an entire flight engineer proficiency check in an airplane in flight.

(7) Check Flight Engineer—All Checks. An inspector must evaluate a candidate for a check flight engineer—all checks designation while the candidate conducts a flight engineer proficiency check in a flight simulator. The abnormal and emergency procedures segments of the check must be accomplished in the flight simulator. The normal procedures section of the check may be conducted either in the flight simulator or in the airplane in flight.

C. Conduct of a Check Airman Evaluation.

(1) An inspector conducting a check airman evaluation must arrange to meet with the check airman candidate in sufficient time for a pre-evaluation briefing. The inspector shall inform the candidate of the purpose of the evaluation and that the check should be conducted as if the candidate were fully qualified for the requested check airman designation. During the briefing, the inspector should also ask questions of the candidate to determine if the candidate has a thorough knowledge and understanding of applicable FAA regulations, operator policies, methods and procedures, and of the actions to be taken when acceptable standards are not met. Inspectors should not ask questions of this nature while the check is actually being conducted.

(2) While the check is in progress, the inspector must observe, but should not interrupt or interfere with, the techniques and actions taken by the check airman candidate. The inspector must determine if all required events were accomplished and if each event was properly conducted. The candidate's evaluation of the airman's performance must be accurate. The candidate's debriefing of the airman must be accurate, complete, and constructive. See volume 6, chapter 2, section 8, for additional guidance on conducting proficiency check airman evaluations.

691. PHASE FIVE—CHECK AIRMAN APPROVAL. All check airmen designated for FAR Part 121 or FAR Part 135 operations must be approved by the operator's POI.

A. Approval of a check airman shall be in the form of a letter addressed to a responsible official of the operator and signed by the POI (or designated representative). This letter of approval may be transmitted to the operator by mail or by electronic means. The letter shall contain the following:

- Check airman name and applicable FAA certificate number
- Specified check airman designation
- Specified aircraft
- Operator or operators the check airman may serve
- Effective date of each designation (Since different designations may occur at different times, this information simplifies record checks. The same date the check airman was evaluated and recommended for approval by an inspector shall be the effective date of designation.)

B. A check airman shall be approved for only the types of check airman functions defined in section 1

of this chapter. Only one letter of approval may be in effect at any time. The letter of approval should contain instructions to the operator that a copy of the approval letter must be placed and retained in the individual check airman's training records. Copies of all check airman approval letters must be maintained in the district office files for 2 years after the designation is cancelled or superseded. See figures 3.3.2.1. and 3.3.2.2. for sample letters of approval.

C. A copy of the check airman designation letter shall be sent to the geographic program manager having surveillance responsibility for the check airman.

D. The POI shall ensure that a record of the designation is entered in the Program Tracking and Reporting Subsystem (PTRS). Each time a check airman is designated or terminated, the POI shall ensure that the operator's Vital Information Subsystem (VIS) file accurately reflects the current number of check airmen designated for the operator.

On satisfactory completion of this process, the POI shall issue a letter designating the initial cadre check airman as a check airman, in accordance with paragraph 1051.

697. DESIGNATION OF A CHECK AIRMAN IN MULTIPLE AIRCRAFT. Before an airman may be designated as a check airman in more than one type of aircraft, the operator must show that there is a need for the designation. The airman must be fully qualified and current in each of the aircraft types. It is national safety policy that POI's closely monitor and control such designations. There are various acceptable combinations of designations.

A. A check airman may be designated to serve in all single-engine, general-purpose airplanes that an operator operates under FAR Part 135.

B. A check airman may be designated to serve in two different series of multiengine, general-purpose airplanes that an operator operates under FAR Part 135.

C. A check airman may be designated to serve in two different types of helicopters.

D. For FAR Part 135 operations, a check airman may be designated to serve in two of the following aircraft families:

- One series of multiengine, general-purpose airplanes
- Single-engine, general-purpose airplanes
- Helicopters

E. Before airmen can be designated in two commuter category aircraft or transport category aircraft, POI's must ensure that the following conditions are met:

- Pilot proficiency check airmen—must have logged 500 hours as PIC in each type of aircraft involved
- Line check airmen—must have logged 100 hours as PIC in each type of aircraft involved and 1,000 or more hours in command of transport or commuter category airplanes
- Flight engineer check airmen—must have logged 500 hours as a flight engineer in the specific type of aircraft

699. APPROVAL OF A CHECK AIRMAN TO SERVE MULTIPLE OPERATORS. This paragraph provides a standardized method for designating a check airman to serve multiple operators. The designation of a check airman to serve more than one operator is limited to those cases in which the operators' aircraft, aircraft operating manuals, procedures, and checklists are compatible. The provision for a multiple designation is made for FAR Part 135 single pilot operators, FAR Part 135 single PIC operators, and for FAR Part 121 and FAR Part 135 operators who contract with recognized training centers for a standardized course of training. POI's may also designate a check airman to serve multiple FAR Part 121 or FAR Part 135 operators on a temporary basis, such as when an operation is originally being introduced or when new equipment is being introduced. Other multiple designations may be made with the concurrence of the regional office.

NOTE: Check airmen are currently designated for training centers under exemptions to FAR Part 121 or FAR Part 135. Rulemaking is currently in progress to standardize the management of training centers and to regulate the designation of check airmen and designated examiners working for training centers. The guidance of this section may be applied to check airmen employed by training centers as long as it does not conflict with the provisions of the exemption, and until FAR Part 142 is published. At that time, the guidance of this section will be revised.

A. Before a multiple designation is made, the POI shall ensure that the operators involved understand that the scheduling and use of the check airman is solely their responsibility. An operator entering into a multiple-use arrangement may employ the check airman on a part-time basis, may contract with another operator or training facility to provide the check airman, or may obtain the check airman's services through a contract with the individual. Each operator will be responsible for ensuring that the check airman maintains current qualification as specified in section 1 of this chapter and performs adequately when serving the operator.

B. An operator seeking a check airman designation for an individual who is currently serving as a check airman for another operator should first discuss the designation with the POI. The operator's POI shall then determine what means the operator will use to train, initially qualify, and then maintain the qualification of the check airman as a crewmember and check airman. The check airman should be able to accomplish recurrent training for both operators simultaneously. When the operator and the POI have agreed on the training and qualification necessary for the check airman, the operator shall submit a written request for designation, as described in paragraph 1043 of this chapter. A copy of the candidate's current check airman letter of designation must be attached to the request.

C. If the airman's qualifications are acceptable to the first operator's POI, the first operator's POI shall contact the POI for which the check airman is currently serving. Both POI's must agree on the means by which the check airman will maintain qualification and as to which POI will subsequently have the primary responsibility for supervising and conducting surveillance of the check airman. The POI who originally designated the check airman will usually retain this responsibility. When the check airman is employed by a training center, the POI of the training center will usually assume this responsibility. The POI that does not have the primary responsibility for surveillance of the check airman does not have to conduct routine surveillance, but may do so whenever the POI considers it to be necessary.

D. A check airman may hold only one letter of approval for designation as a check airman. When being designated as a check airman for a second or subsequent operator, the check airman must be issued a revised letter of approval showing the type of equipment and types of checks that are authorized for each operator. Sample check airman letters of approval that may be used for this purpose are in figures 3.3.2.3. through 3.3.2.5. The POI preparing the letter of approval shall send a copy to each operator involved and to each POI concerned. Should it be necessary to remove the check airman designation for one or both operators, the POI having responsibility for designation and surveillance shall prepare the revised letter of approval and mail it to each operator and to each POI concerned.

E. Each participating operator is required by the FAR to maintain training and qualification records for the check airman. It is acceptable for one operator or a training center to keep the records on the check airman for all operators the check airman is authorized to serve. This arrangement must be acceptable to each POI concerned. Each POI shall record the consent and retain the memorandum in the operator's file. A copy of the memorandum should also be provided to the operator to be retained in the operator's file.

CHAPTER 4. THE ADVANCED QUALIFICATION PROGRAM

SECTION 1. DISTINGUISHING FEATURES OF THE ADVANCED QUALIFICATION PROGRAM

727. GENERAL. This chapter contains information, direction, and guidance to be used by Federal Aviation Administration (FAA) personnel responsible for the evaluation, approval, and surveillance of flightcrew training programs conducted under Special Federal Aviation Regulation (SFAR) 58 by Federal Aviation Regulations (FAR) Part 121 or 135 air carrier certificate holders, or by a training center for such operators. The advanced qualification program (AQP) provides certificated air carriers with a voluntary alternative for training, qualifying, and certificating aircrew personnel. AQP was established to permit a greater degree of regulatory flexibility for the approval of innovative pilot training programs tailored to an individual operator's needs and circumstances. AQP provides a systematic basis for matching technology to training requirements and for approving training program content based on relevance to operational performance. Based on a documented analysis of operational requirements, an air carrier under AQP may propose to depart from traditional practices with respect to what, how, when, and where training and testing is conducted, subject to FAA approval of the specific content of each proposed program.

729. CHARACTERISTICS OF AQP. The principal differences between AQP and traditional FAR Part 121 or 135 training programs are as follows:

A. Job Task Analysis and Qualification Standards. Programmed hours are replaced by a proficiency-based curriculum. Proficiency requirements are embodied in applicant-developed qualification standards, which specify the performance, standards, and conditions to be employed for training or evaluation purposes. Qualification standards are derived from a job task analysis that is specific to an individual carrier's aircraft, operating environment, and pilot population. The job task analysis documents each major task and subtask, together with their associated knowledge and skills, to be addressed in an AQP curriculum. AQP job task analysis and qualification standards are aircraft make, model, series, variant, and duty-position specific. The content of the job task analysis and qualification standards derived therefrom must be approved by the FAA.

B. Replacement of Certain Requirements. An applicant may propose to replace certain requirements of FAR Parts 61, 121, or 135 with an AQP curriculum, subject to FAA Headquarters approval. An AQP may employ substitutes for the practical test requirements of FAR Part 61, such as the progressive sign-off of knowledge and individual maneuver proficiency in training, and replacement of a maneuver-oriented final check ride with an approved line operational evaluation (LOE) focusing on the integration of technical and crew resource management (CRM) skills. Each requirement of FAR Parts 61, 121, or 135 that is not specifically addressed in an approved AQP curriculum continues to apply to the certificate holder. For all applicants, approved AQP qualification standards replace FAR Part 61, Appendix A and the Practical Test Standards (PTS); FAR Part 121, Appendix E; and FAR Part 121, Appendix F. AQP requires that all departures from traditional regulatory requirements be justified based on a level of analysis sufficient to establish at least an equivalent level of safety.

C. Crew-Oriented Training and Evaluation. AQP emphasizes crew-oriented training and evaluation. It extends this concept from line-oriented flight training (LOFT) and special purpose operational training (SPOT) to LOE. It requires that an AQP curriculum not only include scenario-based training conducted, where feasible, with a full crew in a flight simulator or flight training device, but that proficiency evaluations be conducted on the same basis, where feasible. LOFT/SPOT/LOE scenarios must be approved for their intended use in an AQP by the appropriate FAA authority in the responsible Flight Standards District Office (FSDO). LOFT/SPOT/LOE scenarios must be designed to provide the opportunity for training or evaluation, as appropriate, on approved AQP qualification standards.

D. Crew Resource Management. Training of CRM is mandatory. A means of evaluating the effectiveness of such training is also mandatory, but pass/fail CRM standards are not required. Applicant-developed pilot evaluation strategies must at least include provisions for assessing the extent to which poor CRM skills are a contributory factor in a pilot's failure to meet technical standards of operational flight

performance in proficiency evaluations and line checks.

E. Evaluation Periods. In order to facilitate crew-oriented training, AQP establishes a common time interval, called an evaluation period, for training and evaluation of all cockpit crew personnel. The duration of an evaluation period in an AQP approved for initial operations is 12 months, plus or minus 1 month. Each evaluation period must include at least one training session devoted to both training and evaluation activities. Under AQP, training or checking for pilots-in-command (PIC) at 6-month intervals is replaced by a full crew line check conducted at the midpoint of each evaluation period, plus or minus 1 month. AQP also includes limited provisions for extending these intervals under certain circumstances following program implementation, based upon the acquisition of data, acceptable to the FAA, which would justify doing so. The FAA may approve extension of evaluation periods in 3-month increments, up to a maximum of 26 months.

F. Single-Visit Training Program (SVTP). In order to facilitate transition to an annualized training and evaluation schedule for all crews, pending the implementation of AQP across all fleets, AQP applicants may request an exemption to permit an SVTP. Application for an SVTP exemption is made in accordance with FAR § 11.25. It is FAA policy that exemption to permit an SVTP shall only be granted to FAR Part 121 and FAR Part 135 air carriers who have applied for AQP. The SVTP exemption shall be renewed at 2-year intervals, subject to a determination by the FAA that reasonable progress towards AQP implementation has been accomplished by the air carrier. AQP applicants must provide the FAA with a planned schedule for transitioning all pilots in all fleets to the AQP. Such scheduling will normally be structured to occur on a staggered basis over a period of years.

G. Two Curriculums. AQP collapses the traditional categories of air carrier pilot training into two distinct curriculums:

(1) AQP Qualification Curriculum. This includes Initial Equipment Training, Transition Training, and Upgrade Training (Different Aircraft).

(2) AQP Continuing Qualification Curriculum. This includes Recurrent Training, Requalification Training, and Upgrade Training (Same Aircraft).

NOTE: AQP retains the existing category of Indoctrination Training.

H. Additional Requirements. AQP requires the development and implementation of approved AQP indoctrination, qualification, and continuing qualification curriculums for all pilots, AQP instructors and AQP evaluators, including the specification of qualification standards for such personnel (AQP entails no changes to the regulatory eligibility requirements for such personnel). AQP requires that aviation safety inspectors (ASI) who will be responsible for surveillance of an air carrier's AQP be familiar with the specifics of that carrier's approved program. ASI's who will be responsible for conducting pilot certification under an air carrier's approved AQP curriculum must have attended that air carrier's training course for AQP evaluators in that curriculum. ASI's may meet this AQP requirement by attending the air carrier's differences course for existing instructors and check airmen.

I. Data Reporting. AQP requires air carriers to report data on aircrew, instructor, and evaluator performance in training and evaluation to the Advanced Qualification Program Branch (AFS-230) at FAA Headquarters. This data must be submitted in a digital electronic format approved by AFS-230 to facilitate trend analysis for program validation and safety surveillance purposes. All such data is de-identified with respect to individual pilots. AQP data augments, but does not replace, inspector physical surveillance of air carrier pilot training and evaluation programs.

J. Conformance to Handbook Standards. In most other respects, AQP follows the direction and guidance provided in volume 3, chapter 2, for training programs and airman qualification. All AQP curriculums must be structured in accordance with the guidance provided in volume 3, chapter 2, for segment, module, lesson, and element. Similarly, procedures for the qualification of flight training equipment are identical under AQP. However, an applicant may propose to depart from the permissible-use tables for flight training equipment provided in volume 3, chapter 2, section 6, subject to acceptable justification and FAA approval of the intended use of such equipment in a specific AQP curriculum. Although AQP follows its own phased approval process, the activities described in volume 3, chapter 2, with respect to inspector review of curriculum content, as well as inspector monitoring and evaluation of initially approved training curriculums, are virtually identical under AQP.

K. Headquarters Approval of Training Programs. AQP application, development, and approval is centrally managed by AFS-230.

731. KEY CONCEPTS AND SPECIAL TERMINOLOGY. AQP employs certain unique concepts and terminology. The following is an expla-

nation of selected concepts and terms that are pertinent to inspector review, surveillance, and approval activities:

A. Terminal and Supporting Proficiency Objectives. Terminal proficiency objectives (TPO) generally are derived at the task level from the job task analysis. They reflect the end-level proficiency to be achieved in training and demonstrated in evaluation. Supporting proficiency objectives (SPO) generally are derived at the subtask level from the job task analysis. They reflect the subtasks on which proficiency must be achieved in training in order to perform at a satisfactory level on a given TPO. However, a consistent one-to-one correlation between all tasks/subtasks and TPO's/SPO's is not expected. Multiple TPO's may be derived from a single task, or multiple tasks may produce a single TPO, depending on how significantly the performance is altered due to conditions and/or contingencies. Both TPO's and SPO's require specification of the performance to be accomplished, the standards that must be met or exceeded to demonstrate proficiency, and the conditions under which training or evaluation of performance will be conducted. A complete list of TPO's and SPO's would encompass all major tasks and subtasks for all phases of flight.

B. Qualification Standards. When an AQP TPO or SPO is coupled with a training and/or evaluation strategy, together with specification of a media range, the result is an AQP qualification standard. Qualification standards created at the terminal level generally reflect objectives for pilot evaluation, although some such objectives may be addressed only in training to proficiency in the applicant's approved AQP. Qualification standards created at the supporting level generally reflect objectives for pilot training, although some such objectives may also be identified for checking in the applicant's approved AQP. Figure 3.4.1.1. presents an example of an AQP qualification standard established at the terminal level.

NOTE: Variation in the format of a given air carrier's qualification standards is permissible, provided that all of the categories of information in the example are addressed.

C. Currency Events. An AQP applicant may elect to identify certain TPO's as currency events, based on an analysis of the frequency with which a given flight task and condition set occurs during line operations. Candidates for such a designation include only those tasks on which skills are maintained by virtue of their frequent exercise in flight, such as normal takeoff in fair weather. The purpose of identifying currency events is to enable training and evaluation to focus on areas of greatest need. Approved currency events do not need to be specifically trained in continuing qualification curriculums, provided that the applicant implements a means acceptable to the FAA of periodically verifying that proficiency on such items is being maintained. As a minimum, proficiency on currency events shall be assessed during on-line evaluations.

D. Continuing Qualification Cycles. An AQP continuing qualification cycle is comprised of two evaluation periods of equal duration (plus or minus 1 month). For an AQP approved for initial operations, a continuing qualification cycle has a duration of 24 months (plus or minus 1 month), incorporating 2 evaluation periods, each of which is 12 months long, plus or minus 1 month). AQP also contains limited provisions for extending the duration of a continuing qualification cycle under certain circumstances following program implementation, based upon the acquisition of data acceptable to the FAA which would justify doing so. The FAA may extend a continuing qualification cycle in 3-month increments up to a maximum of 39 months.

E. Criticality of Proficiency Objectives. An applicant may elect to identify certain TPO's as critical or non-critical, based on the applicant's job task analysis. The principal consideration with respect to criticality is the frequency of proficiency training or evaluation required to ensure a margin of safety with respect to pilot performance. Critical TPO's must be evaluated during every evaluation period. Under an AQP approved for initial operations, this means that evaluation of critical TPO's must occur within 12 months, plus or minus 1 month. Training or evaluation of non-critical TPO's for such a curriculum must occur within every continuing qualification cycle. For initially approved AQP's, this means that evaluation of non-critical TPO's must occur within a 2-year interval, plus or minus 1 month. If the applicant elects not to categorize TPO's in terms of criticality, all TPO's derived from the applicant's job task analysis shall be considered critical.

F. First Look. Since the interval between training and checking in AQP may exceed traditional regulatory time limits, AQP employs a method known as First Look to assess the extent to which pilot skill degradation may have occurred between AQP training sessions. First Look entails the assessment of level of proficiency on a selected sample of maneuvers the first time they occur in training (prior to the repeated execution or training of any such maneuvers). The maneuvers to be addressed on a sampled basis in a given applicant's First Look shall be specified in the applicant's approved AQP.

G. Evaluators. AQP entails no changes to the existing policies and procedures as they apply to the

eligibility requirements for aircrew program designees (APD), air transport pilot examiners (ATPE), or authorized training center evaluators, nor to the FAA approval process for such personnel, nor to the FAA management of such personnel. However, under an approved AQP, an applicant may employ alternatives to the practical test requirements of FAR Parts 61, 121, and 135. Therefore, APD's, ATPE's, and authorized training center evaluators must be qualified to conduct airman certification in accordance with the respective air carrier's approved AQP. This must be accomplished by completion of approved AQP evaluator indoctrination and qualification curriculum modules for new personnel, or a differences course for existing such personnel, and the maintenance of such qualification under an approved AQP evaluator continuing qualification curriculum.

(1) APD's, ATPE's, Training Center Evaluators, and FAA Inspectors. These personnel must be authorized by the respective principal operations inspector (POI) to conduct airman certification for a given air carrier's AQP.

(2) Other Evaluators. In addition to APD's, ATPE's, and training center evaluators authorized to conduct certification, AQP recognizes other categories of evaluators who do not have signatory authority for certification, such as ground school evaluators or proficiency check airmen. In most cases, such individuals will also serve in the role of curriculum instructors. All such individuals must complete evaluator indoctrination, qualification, and continuing qualification training that qualifies them to assess proficiency on the type of activities for which they are responsible within a given AQP curriculum, in addition to complying with existing FAA eligibility requirements and approval procedures.

733. INSTRUCTORS. AQP entails no changes to the eligibility requirements for instructors. All new instructors must complete FAA-approved AQP indoctrination, qualification, and continuing qualification curriculums that qualify them for the instructional duties for which they are responsible in a given AQP curriculum. Instructor and evaluator AQP curriculums may be combined in a modular fashion. For existing instructors, an approved AQP differences curriculum may be employed for transition to an initial AQP in a given aircraft.

735. TRAINING AND EVALUATION UNDER AQP.

A. Training Sessions. For continuing qualification curriculums, a training session shall begin with a First Look in which performance on a sampling of critical and non-critical TPO's shall be graded. Although the applicant may elect to schedule simulator time dedicated to First Look, it is not required. First Look data may be obtained during a normally scheduled LOFT, SPOT, or by assessment on an individual maneuver basis, or a combination thereof, as long as the requirement to make such assessments on the first occasion of the maneuver in training is maintained. The remainder of the continuing qualification training session will entail a combination of LOFT, SPOT, and individual maneuvers (event sets) conducted on a full crew-oriented basis, where feasible. The content of such training must be in accordance with the applicant's approved continuing qualification curriculum. LOFT scenarios must be approved for their intended use by the POI.

B. Proficiency Evaluations. For PIC's, seconds-in-command (SIC), and flight engineers (FE), at least one proficiency evaluation must be completed during each evaluation period. While such evaluations will normally be scheduled to occur in conjunction with a training session, an applicant's approved AQP may permit that they be otherwise scheduled. Proficiency evaluations shall be conducted using LOE and a full crew, where feasible. LOE scenarios must be approved for their intended use by the POI. LOE's may be supplemented by individual maneuver (event sets), when necessary.

C. On-line Evaluation. Each PIC must receive at least one on-line evaluation (line check) per evaluation period, scheduled to occur at the midpoint (plus or minus 1 month) of the period. Under an AQP approved for initial operation, the PIC on-line evaluation shall occur at 6 months, plus or minus 1 month, following a training session. Although scheduling of on-line evaluations shall be determined solely on the basis of PIC requirements, when such line checks are conducted they shall include all cockpit crewmembers present.

D. Extensions. The FAA may approve extensions of the continuing qualification cycle and evaluation period, in increments not exceeding 3 calendar months, upon demonstration by an applicant that the extension is warranted. To obtain approval for extension, an applicant must show that individuals subject to the AQP are able to maintain their knowledge and skills under the already approved schedules and that a rational basis exists for believing that no loss of knowledge, skill, or abilities would result from the extension. An extension shall be allowed to continue, or an additional extension shall be granted, only if an operator's record and independent FAA evaluation show that the extension is appropriate as a means to maintain or increase the level of crewmember competency. The FAA will consider duration extensions

if evidence substantiates that the extension will maintain or increase the level of safety in air transportation. This could occur, for example, if the applicant proposes to increase the number of training sessions per evaluation period. The number and frequency of training sessions must be approved by AFS-230. The maximum permissible duration of a continuing qualification cycle is 39 months, and the maximum permissible duration of an evaluation period is 26 months. Extensions beyond the initial evaluation and continuing qualification cycle periods permitted by AQP (12 and 24 months respectively plus or minus 1 month) will require strong justification, and shall only be issued by AFS-230.

E. Validation. AQP curriculums shall be subject to continued demonstration of overall effectiveness. This demonstration shall be based on physical surveillance by FAA personnel, as well as on the submission of de-identified data on pilot performance to the FAA for program tracking and trend analysis purposes. Such data shall be submitted on both qualification and continuing qualification curriculums, and shall include such information as First Look and proficiency evaluation grades on TPO's, repetitions to proficiency, and the frequency of occurrence of CRM factors in substandard technical performance. All such data shall be submitted in digital electronic format directly to AFS-230. The detailed requirements for data acquisition and reporting for a given applicant will be specified in that applicant's approved AQP. Since an AQP may be customized to a particular operator's circumstances, data requirements may differ between applicants. AFS-230 shall provide POI's with quarterly written reports in graphical and narrative format summarizing the significant content of each applicant's AQP trend analysis. In addition, each applicant is responsible for analysis of data and initiation of refinements to its AQP, as warranted.

F. Establishment of a Designated Examiner Program Under AQP. Under the philosophy of AQP as it pertains to pilot training, the POI's activities should be focused on the review of curriculum content, approval of line-operational scenarios (LOFT, SPOT, and LOE), surveillance of initial and continuing instructor and evaluator qualification, and verification of compliance with AQP qualification standards. In order to execute this philosophy effectively, an air carrier designated examiner (ADE) or ATPE program must be in place prior to initial operation of an AQP pilot training curriculum. For regional airlines that do not already have such a program, an ATPE program should be established in accordance with volume 5, chapter 5.

736.–746. RESERVED.

FIGURE 3.4.1.1.
XYZ AIRLINES, INC.
AQP QUALIFICATION STANDARD (TERMINAL)
DATE: 12/06/93 REVISION NUMBER: 0

AIRCRAFT: Boeing 757, 767-200, 767-300, 767-300ER

PHASE OF FLIGHT: 6 APPROACH

TASK: 6.4 PERFORM CAT II PRECISION APPROACH OPERATIONS

CREW (DUTY) POSITION: CAPTAIN (PF)*
ER FIRST OFFICER (PNF)*
FIRST OFFICER (PNF)*

CRITICALITY: Yes

CURRENCY: No

CURRICULUM	SEGMENTS				
QUALIFICATION	SPEC PURP	GRND TRNG	FLT TRNG	OE	EVAL
			X		X
CONTINUING QUALIFICATION	SPEC PURP	GRND TRNG	FLT TRNG	LINE CH	P-CHECK
			X		EVERY

MEDIA (MINIMUM FOR EVALUATION)	CLASS/ BRIEF	CBT	CAPT	FTD	SIM	AIRCRAFT
				LEVEL 5	LEVEL C	

PERFORMANCE STATEMENT:
The pilot will demonstrate the ability to perform Precision Approach Operations by performing CAT II ILS Precision Approach/Preparation and Final Approach Procedures, by programming the FMC while complying with ATC clearances and appropriate navigation procedures, operating the Autopilot Flight Director System in LEVEL 3 of Automation, monitoring flight and navigation instruments, monitoring approach progress on Map Display, configuring the aircraft, complying with standard policies and limitations, and completing Before Landing Checklist.

*In this Standard, the Captain is designated as Pilot Flying (PF), and as such is responsible for the performance of both procedure and maneuver standards. The F/O, is designated as Pilot Not Flying (PNF), and is responsible for the performance of procedures and a knowledge of the tolerances within the maneuver standards.

CONDITIONS:

NATURAL ENVIRONMENTAL:

TEMPERATURES
TEMPERATURE 38F TO 100F

FIGURE 3.4.1.1.—Continued
XYZ AIRLINES, INC.
AQP QUALIFICATION STANDARD (TERMINAL)

WINDS
CROSSWIND 10 KNOTS OR GREATER

VISIBILITY
VISIBILITY 1200 RVR (CAPT CERTIFICATION)

AIRCRAFT CONFIGURATION:

GROSS WEIGHT HEAVY
757 - 175K TO 195K
767-200 - 245K TO 265K
767-300 - 260K TO 290K
767-300ER - 270K TO 300K

STANDARDS:

PROCEDURES:

ACCOMPLISH CHECKLISTS WITHOUT ERROR OR OMISSION

IN ACCORDANCE WITH XYZ AIRWAY MANUAL, PROCEDURES, WEATHER AND TERMINAL SECTIONS

IN ACCORDANCE WITH XYZ PILOTS OPERATING MANUAL, NORMAL PROCEDURES, ABNORMAL, SUPPLEMENTAL AND LIMITATIONS SECTIONS

IN ACCORDANCE WITH XYZ PILOTS REFERENCE MANUAL, FLIGHT TRAINING SECTION

MANEUVERS:

COMPLIES WITH ATC CLEARANCES AND RESTRICTIONS

COMPLIES WITH CURRENT PRECISION APPROACH PLATE PROCEDURES

PRIOR TO FINAL APPROACH SEGMENT MAINTAINS HEADING WITHIN + OR - 10 DEGREES

PRIOR TO FINAL APPROACH SEGMENT MAINTAINS ALTITUDES WITHIN + OR - 100 FEET

PRIOR TO FINAL APPROACH SEGMENT MAINTAINS AIRSPEED WITHIN + OR - 10 KNOTS

PRIOR TO FINAL APPROACH SEGMENT INTERCEPTS AND TRACKS COURSES, RADIALS, AND BEARINGS

DISCONTINUES THE APPROACH ANY TIME FULL SCALE DEFLECTION OF THE HSI CDI OCCURS DURING THE FINAL APPROACH SEGMENT

AVOIDS DESCENT BELOW LOCALIZER MINIMUMS IF THE AIRCRAFT IS MORE THAN 1 DOT BELOW OR 2 DOTS ABOVE THE GLIDE SLOPE. IF THE GLIDE SLOPE IS RECAPTURED TO WITHIN THE ABOVE TOLERANCE, DESCENT MAY BE CONTINUED TO THE DECISION REGION

(FOR 757/767-200) MAINTAINS TARGET AIRSPEED ON FINAL APPROACH WITHIN + OR - 5 KNOTS

(FOR 767-300/300ER) MAINTAINS TARGET AIRSPEED ON FINAL APPROACH WITHIN -5 TO + 10 KNOTS

MAINTAINS VREF 30 + 5 AS TARGET AIRSPEED ON FINAL APPROACH WITHIN + OR - 5 KNOTS DURING AUTOLAND OPERATIONS WITH AUTOTHROTTLES ENGAGED

MAINTAINS A MAXIMUM OF 1/3 DOT LOCALIZER DISPLACEMENT WHILE IN THE DECISION REGION WITH NO SUSTAINED OSCILLATIONS

MAINTAINS A MAXIMUM OF 1/2 DOT GLIDESLOPE DISPLACEMENT WHILE IN THE DECISION REGION WITH NO SUSTAINED OSCILLATIONS

training and evaluation: line-oriented flight training (LOFT)/special purpose operational training (SPOT)/line-operational evaluation (LOE)

- Why the proposed program will provide an equivalent or better level of safety compared to the applicant's existing approved program
- A Transition Plan outlining the proposed method and schedule for entry into the program (The applicant should also include information on how the applicant might exit the program should it become necessary to do so.)
- A listing of applicable publications and manuals on aircraft, flight operations, and pilot training pertinent to the applicant's proposed AQP
- A summary of trainee, instructor, and evaluator pilot population characteristics sufficient to indicate flight training backgrounds and relative levels of flight experience pertinent to the proposed AQP
- A summary listing of existing or planned training equipment, to include level of existing or anticipated FAA qualification (airplane flight simulator and flight training device)
- Facilities description
- Operating environment description

(2) FAA Review. AFS-230 shall accomplish review and analysis of the application as follows:

- The applicant's proposed methodology for program development (The applicant may elect to employ the AQP development process described in existing FAA advisory materials, or may elect to propose modifications to that methodology. In any case, the process proposed must be deemed adequate by the FAA for the development of AQP qualification standards and associated curriculums.)
- Evidence of the applicant's ability to execute the processes of development, implementation, and operation
- Missing or incomplete application information

(3) Application Approval. After determining that the applicant's submittal is satisfactory, the manager of AFS-230 shall approve acceptance of the application. This approval will permit the applicant to proceed to phase two.

B. Phase Two: Curriculum Development. This phase is the most demanding in terms of program development activity. Accordingly, it has been further divided into three distinct steps: Step 1 is the derivation of terminal and supporting proficiency objectives from the job task analysis; Step 2 is syllabus development; and Step 3 is development of training requirements and plans. AFS-230 shall lead the review of applicant activities in this phase and shall designate an interdisciplinary core of key FAA personnel to assist in this review, as well as in succeeding phases. Core FAA personnel shall include (but not necessarily be limited to) the following:

- The POI (or a designated representative)
- The assigned aircrew program managers (APM), if any
- AQP-qualified air carrier operations specialists
- An instructional system design specialist
- A data management specialist
- Additional personnel as required in specific areas of technical expertise, such as civil aviation security and aircraft evaluation group/flight standardization board (AEG/FSB) personnel

(1) Required Documents. The applicant shall submit the following documents to AFS-230:

(a) For Step 1:

- A current, complete copy of the flight operations training manual (or comparable document), with permanent distribution to AFS-230 of future changes thereto
- Such other publications, air carrier manuals, and manufacturer documentation as requested by AFS-230 to assist in the review team's activities
- Supporting task analysis
- Qualification standards

(b) For Step 2:

- Curriculum development methodology
- AQP syllabus

(c) For Step 3:

- AQP training resource requirements
- AQP implementation and operations plan

(2) Review and Evaluation.

(a) For Step 1. The FAA core review team shall evaluate the supporting task analysis for completeness and accuracy of technical content. The content of qualification standards shall be reviewed for comparison to the FAR appendices they replace (Appendices A, E, and F), the Practical Test Standards (PTS), and to the air carrier's operations specifications. The purpose of this review is to accomplish a determination of equivalent or better level of safety. AFS-230 shall request modifications to either document as recommended by the review team. Upon satisfactory completion by the applicant of all requested changes, the manager of AFS-230 shall approve the supporting task analysis and qualification standards documents in writing. This will permit the applicant to continue with step 2, syllabus development.

(b) For Step 2. AFS-230 shall review the applicant's curriculum development methodology with respect to the means proposed for ensuring that the content of the supporting task analysis will be incorporated into the curriculum, and for consistency with the guidelines of volume 3, chapter 2. The FAA review team shall evaluate the syllabus in terms of its completeness, training and evaluation strategies, and adequacy for achieving the approved AQP qualification standards. AFS-230 shall request the applicant to make changes as required, based on the recommendations of the FAA review team. Upon satisfactory completion by the applicant of all requested changes, the manager of AFS-230 shall approve the applicant's curriculum development methodology and AQP syllabus. This will permit the applicant to proceed with step 3, training requirements and plans.

(c) For Step 3. The FAA review team shall evaluate the training resources requirements document and the implementation and operations plan for completeness, feasibility, and adequacy of the applicant's resources to support and maintain the proposed AQP curriculum. AFS-230 shall request the applicant to make modifications as required, based on the recommendations of the FAA review team. Upon satisfactory completion by the applicant of all requested changes, the manager of AFS-230 shall approve the applicant's step 3 documentation. This approval will allow the applicant to proceed to phase three.

C. Phase Three: Implementation. In this phase, the applicant will complete development of required courseware and conduct preliminary assessment of training resources and materials, such as dry running new LOFT and LOE scenarios, testing the feasibility of proposed data acquisition strategies, or other such activities as are called for in the applicant's implementation and operations plan. AQP qualification of instructors and evaluators shall be accomplished in this phase. Similarly, if not already completed, flight training equipment must be qualified by the FAA in accordance with existing FAA regulations, policies, and procedures.

(1) Documentation. Results of this step shall be supplied to the FAA in the form of a single document entitled, "Implementation and Operations Plan Update." The AQP qualification records for instructors and evaluators shall be generated and maintained by the applicant.

(2) FAA Review and Evaluation. FAA activities in this phase will consist principally of observing or participating in new LOFT/SPOT/LOE scenarios, and monitoring the AQP training provided to instructors and evaluators.

(a) Surveillance of Phase Three Activities. Assigned FAA field inspectors shall accomplish this surveillance. These inspectors shall also attend the applicant's evaluator training for their own qualification. The POI shall ensure inspection of all instructor and evaluator qualification records for completeness and correctness. Surveillance shall be augmented with visits from representatives of the manager of AFS-230. Representatives of the national simulator program manager (NSPM) shall conduct any required flight training device or flight simulator evaluation and qualification.

(b) The Implementation and Operations Plan Update Document. The FAA review team shall evaluate this document for a determination of the applicant's readiness to conduct and maintain the proposed AQP pilot training curriculum. The POI and the manager of AFS-230 shall conduct a joint final review of the applicant's proposed program. AFS-230 shall coordinate the resolution of any remaining concerns as required. The manager of AFS-230 shall then notify the POI that the AQP has been approved under SFAR 58 for initial operations. The POI in turn shall provide the air carrier with written notification of FAA approval. A recommended format for the AQP approval letter is presented in Figure 3.4.2.1.

1. Operations Specifications Entry. In addition, upon receipt of the approval document, the POI shall make the following entry into the air carrier's operations specifications:

"OPERATIONS SPECIFICATIONS A4. SUMMARY OF SPECIAL AUTHORIZATIONS AND LIMITATIONS. . . .

"A4. . . . a. Conduct initial operations of an approved Advanced Qualification Program, *[enter qualification,*

continuing qualification curriculum, or both, as appropriate], under SFAR 58 for *[enter make/model/series]* aircraft only."

2. Initial approval and operations specifications authorization allows a FAR Part 121 or 135 operator to execute the Implementation and Operations Plan for the AQP through one complete continuing qualification cycle.

(c) Provisional Approval for a Training Center. Provisional approval under SFAR 58 allows a training center to engage with a FAR Part 121 or 135 operator in tailoring a generic AQP curriculum to a given air carrier's specific operations. An application for provisional approval shall contain the same information as that specified in this chapter for an air carrier, except that air carrier-specific information may be omitted. A training center may seek approval for initial operation by modifying a provisionally approved AQP to meet an air carrier's requirements, or by developing an entirely new program for that carrier. A training center that elects to develop a new program for a specific air carrier is not required to seek provisional approval as an intermediate step. In either case, a letter of intent to employ a training center to accomplish initial operation of an AQP must be submitted by the interested FAR Part 121 or 135 air carrier directly to AFS-230.

1. Upon receipt of the letter of intent, AFS-230 shall notify the air carrier, the training center, and the POI by letter specifying the documentation required to establish the operator-specific training center AQP. Depending on whether a previous AQP has been approved for the training center or for the air carrier operator, or on whether a provisional AQP has been approved for the training center, AFS-230 shall request those additional elements of the application necessary to complete the standard AQP information requirements specified for phases one, two, and three.

2. Upon receipt of any additional required documentation, AFS-230 shall designate an FAA AQP core review team to evaluate the package for completeness, accuracy, and appropriateness for the specific certificate holder for whom the AQP is being proposed. AFS-230 shall notify the POI, training center, and air carrier of any required modifications.

3. Upon satisfactory completion of any required modifications, AFS-230 shall notify all concerned parties that the AQP has been approved.

4. Upon receipt of the written notification of approval, the POI shall notify the air carrier that the AQP has been approved for initial operations by the specific training center, and the POI shall enter the appropriate authorization in the air carrier's operations specifications.

D. Phase Four: Initial Operations.

(1) Applicant. The applicant operates and maintains its own AQP curriculum, submits updated training program evaluation results through the POI to AFS-230 as appropriate, and submits digital performance proficiency data directly to AFS-230 in accordance with the requirements specified for the applicant's program.

(2) Review and Evaluation. The FAA shall monitor phase four activities in accordance with the guidance provided in volume 3, chapter 2, regarding initially approved curriculums. AFS-230 shall accomplish trend analysis for AQP data.

(a) Surveillance of all of the applicant's phase four operations shall be accomplished by field inspectors who are knowledgeable concerning the applicant's approved AQP, and by other FAA representatives, as appropriate.

(b) Representatives of the manager of AFS-230 shall witness training and evaluation activities on a sampled basis for all curriculums.

(c) A joint (FAA and applicant) program review should be held within approximately 45 days after completion of the first AQP curriculum, with periodic reviews as required thereafter during the first continuing qualification cycle. The purpose of these reviews is to identify, recommend, and plan needed changes.

(d) An additional review should be jointly accomplished by the FAA and the applicant as soon as feasible after the second evaluation period of a newly established continuing qualification curriculum (that is, after 24 months). Before that review, the applicant is responsible for submitting an AQP "Implementation and Operations Plan Results Report" to document the following:

- Changes to the implementation and operations plan engendered by initial experience in operating the curriculum
- That the current proficiency measures for AQP qualification standards are reliable and valid
- That AQP curriculums are being maintained in accordance with the approved implementation and operations plan
- That recordkeeping is complete and accurate

(e) Based on the outcome of this review, AFS-230 shall notify the POI by letter of AQP program deficiencies or recommended modifications, if any. When the POI notifies AFS-230 by letter that the applicant has corrected any deficiencies noted or has implemented all required modifications, if any, AFS-230 shall notify the POI by letter that the AQP has been approved for phase five. The POI in turn shall notify the air carrier of the AQP phase five approval, and modify the previously issued operations specifications entry to read as follows:

"OPERATIONS SPECIFICATIONS A4. SUMMARY OF SPECIAL AUTHORIZATIONS AND LIMITATIONS. . . .

"A4. . . . a. Conduct continuing operation of an approved Advanced Qualification Program, *[enter qualification, continuing qualification curriculum, or both, as appropriate]*, under SFAR 58 for *[enter make/model/series]* aircraft only."

Final approval and operations specifications authorization will permit the air carrier to proceed to AQP phase-five status.

E. Phase Five: Continuing Operations. Phase five involves continuing operation of the applicant's AQP under local FAA surveillance. The operator's procedures for curriculum maintenance, as documented in the current implementation and operations plan, shall be executed on a continuing basis and shall be reviewed periodically by the FAA, as appropriate. The air carrier shall submit pilot, instructor, and evaluator proficiency data to AFS-230 on a continuing basis for trend analysis purposes. AFS-230 shall provide POI's with periodic reports on the results of those analyses, as required.

751. DATA BASE MANAGEMENT AND ANALYSIS. AFS-230 shall accomplish proficiency analysis, validation of performance measures, and other statistical analysis and research for approved AQP's. AFS-230 shall also apprise POI's and applicants of pertinent analysis results, as appropriate.

753. METHOD OF GRANTING INITIAL OR PROVISIONAL APPROVAL.

A. Approval by Letter. The FAA shall grant initial or provisional AQP approval by letter. The approval letter shall include at least the following information:

- The specific identification of the curriculums and curriculum segments initially or provisionally approved, including page numbers and revision control dates (date of revision for any page)
- A statement that initial or provisional approval is granted and what the effective and expiration dates are (for initial approval)
- Any specific conditions affecting the approval
- A request that the applicant provide the FAA with advanced notice of scheduled activities so evaluations may be planned

B. Copies. A copy of the approval letter shall be maintained by the POI in the certificate-holding district office (CHDO), and by AFS-230. For a training center, copies of a provisional approval letter shall be maintained at the training center, at the FAA district office responsible for oversight of the training center, and by AFS-230. When a training center's AQP is approved for a specific air carrier, copies of the approval letter shall be maintained by the latter three offices, as well as by the air carrier's POI, and by the air carrier itself.

755. METHOD OF DENYING INITIAL OR PROVISIONAL APPROVAL. If the FAA determines that initial (or provisional approval for training centers) must be denied, the FAA shall notify all the affected operators in writing. The letter shall identify any deficiency that was the cause of denial. The principal applicant may redevelop or correct the deficiencies and resubmit the AQP for approval.

757. WITHDRAWAL OF INITIAL OR PROVISIONAL APPROVAL. The FAA may decide to withdraw initial or provisional approval at any time the AQP is not in regulatory compliance, does not provide for safe operations, or does not effectively prepare crewmembers or dispatchers to meet qualification objectives. The FAA shall withdraw initial or provisional approval in writing to all affected operators, stating the reasons for the withdrawal and the effective date of withdrawal. An applicant who receives a letter of withdrawal may revise or refine the curriculum and resubmit it for initial or provisional approval.

759. FINAL APPROVAL. Based on the results of evaluations accomplished during the period of initial approval, the FAA shall grant or deny final approval of an AQP. Final approval is accomplished by stamped endorsement of AQP documents and by approval letter.

A. Stamped Approval Endorsement. For final approval, the original and a copy of each title page and table of contents pages of all AQP required documents are stamped approved, dated, and signed by the FAA operations official designated by AFS-230

to do so. The approval stamp shall be a facsimile of the following:

FAA FINAL APPROVAL

OFFICE DESIGNATOR: _____
EFFECTIVE DATE: _____
NAME: _____
SIGNATURE: _____

NOTE: As approved changes are made to AQP documents, the "Final Approval" endorsement shall be reaccomplished on each table of contents page.

B. Approval Letter. The manager of AFS-230 shall sign all letters of final approval. The manager may delegate this authority to the operator's assigned POI. The letter shall specifically identify the subject curriculums, contain a statement that final approval is granted, and provide the effective date of approval.

C. Copies. A copy of the approval letter shall be kept on file in the operator's assigned district office; at AFS-230; by the operator; and, where applicable, at the location designated as the principal training site of a training center approved under SFAR 58.

761. REVISIONS TO AN AQP. Following approval for continuing operation, circumstances that typically trigger revisions are changes in the kinds, size, or complexity of operations; changes in the configuration of aircraft; and changes in special authorizations permitted through operations specifications, maintenance programs, minimum equipment lists (MEL); exemptions or deviations. Revisions that entail changes to approved AQP qualification standards require coordination and approval from AFS-230. All other revisions to curriculum content may be locally approved in writing by the POI or other authorized FAA representative, provided information copies of such approval documents are forwarded to AFS-230 to facilitate program tracking activities.

763. GENERAL PROVISIONS FOR WITHDRAWAL OF FINAL APPROVAL. The FAA may withdraw final approval of a curriculum at any time if the FAA determines that sufficient safety reasons exist or that required data is not being maintained and provided. Before withdrawing approval, the FAA shall make reasonable efforts to convince an applicant to correct its AQP. The FAA shall withdraw approval by letter. The letter shall identify the affected curriculums, state the reasons for the withdrawal, and state the effective date of the withdrawal (except in an emergency, not less than 7 days after receipt of the letter). The letter shall advise the certificate holder that withdrawal may be appealed and shall provide instructions on how to appeal.

765. APPEAL OF A WITHDRAWAL. To appeal withdrawal of final approval, an operator should petition the Director of Flight Standards Service (AFS-1) for reconsideration within 30 days after receiving withdrawal notification. The petition should be in writing and should explain in detail why the operator believes the withdrawal should not occur.

A. Denial of Appeal. The Director may immediately deny the petition after considering all relevant information presented if the Director believes that an emergency exists that directly affects aviation safety. In this case, the Director shall inform the operator, by letter, of the decision to deny the appeal due to the existence of an emergency. The letter shall state that an emergency exists and shall describe the deficiencies and the actions necessary to correct them.

B. Stay of Withdrawal. If the Director does not believe that an emergency exists, the Director shall carefully consider both the operator's petition for appeal and the FAA's reason for withdrawal of approval. In this case, the operator's petition, provided it goes out within 30 days, stays withdrawal, and the operator may continue to use the AQP curriculum pending the decision of the Director. The Director may find it necessary to conduct additional evaluations of the operator's AQP.

C. Director's Final Decision. In any case, the Director shall make a final decision within 60 days of receiving the operator's petition. The Director may rescind or modify the letter of withdrawal or uphold the withdrawal. If the decision is to modify or uphold the withdrawal, the operator shall be notified by letter. The letter shall contain the reasons for denying all or part of the petition.

NOTE: Final approval does not expire.

766.–776. RESERVED.

FIGURE 3.4.2.1.
RECOMMENDED FORMAT—AQP APPROVAL LETTER

Manager, Appropriate Airline Office Title
XYZ Airline

Dear xxxxxx,

I am pleased to inform you that your Advanced Qualification Program (AQP) pilot training *[enter qualification or continuing qualification]* curriculum, pages 01 through *[enter total inclusive pages]*, dated *[enter date on document]*, for the *[enter make/model/series]* aircraft, has been approved under Special Federal Aviation Regulation (SFAR) 58 for AQP Phase Four, Initial Operations, effective *[enter desired effective date]*. Future page changes to that curriculum must reflect a revision control system that includes page number, revision number, and preparation date.

This approval is contingent on *[enter specific principal operations inspector (POI) or Federal Aviation Administration (FAA) Headquarters-levied conditions and limitations, if any]*.

The expiration date of this initial approval is *[enter a date 2 years from the initial effective date]*. Please provide this office with at least *[enter desired number]* days' advance notice of any training conducted under this curriculum to allow for evaluation of the training in accordance with Federal Aviation Regulations (FAR) § 121.405(b), § 121.405(c), and SFAR 58.

POI Signature Block

[PAGES 3–438 THROUGH 3–448 RESERVED]

CHAPTER 4. THE ADVANCED QUALIFICATION PROGRAM

SECTION 3. ADVANCED QUALIFICATION PROGRAM AIRMAN CERTIFICATION

777. GENERAL. A pilot candidate for certification must be eligible under the applicable requirements of Federal Aviation Regulations (FAR) Part 61, except that an operator may develop alternative methods for the assessment of pilot proficiency. These alternative methods, when specifically authorized under an approved advanced qualification program (AQP) qualification curriculum, may be used in place of the practical tests required under FAR Part 61.

779. COMPLETION OF QUALIFICATION CURRICULUM. An applicant for airman certification under an AQP shall successfully complete the appropriate qualification curriculum. Signature on FAA Form 8710-1, "Airman Certificate And/Or Rating Application," shall be accomplished in AQP only by aircrew program designees (APD), air transport pilot examiners (ATPE), training center evaluators authorized by the FAA to do so, or by an FAA inspector qualified to do so. Under an AQP, signature on FAA Form 8710-1 constitutes verification by competent authority that all of the requirements under the specific provisions of an air carrier's particular AQP qualification program have been satisfactorily accomplished.

781. DEMONSTRATION OF INDIVIDUAL SKILLS. Applicants for certification shall show competence in required technical skills and crew resource management (CRM) skills in actual or simulated operational scenarios that assess both types of skills together.

783. AUTHORIZED EVALUATION PERSONNEL. Principal operations inspectors (POI) shall only authorize APD's, air carrier designated examiners (ADE/ATPE), or qualified training center evaluators to conduct pilot examination activities who have completed the requisite AQP evaluator training. POI's shall only authorize aviation safety inspectors (ASI) who have attended the requisite AQP evaluator training to conduct such activities. POI authorization shall be accomplished by appropriate entry on FAA Form 8710-6, "Examiner Designation and Qualification Record," block 10, (with limitations, if any, noted on side two); and FAA Form 8430-9, "Certificate of Authority," under "is authorized to act in the capacity of a," specifying the aircraft on which AQP certification activity is authorized. Only the following personnel may be authorized signatory authority in the "Inspector's Report" on side two of FAA Form 8710-1:

- ASI's who are currently qualified on the make, model, and series of aircraft, and who have attended training on the specific alternative evaluation process in the particular operator's AQP
- APD's and training center evaluators (currently qualified on the make, model, and series of aircraft) who have completed evaluator qualification and maintain continuing evaluator qualification for the particular operator's AQP (APD's and training center evaluators shall be designated by the FAA, and their special training shall be noted on FAA Form 8710-6, block 10. Each APD must comply with the requirements outlined in volume 5, chapter 6, section 3. Each training center evaluator must comply with the requirements specified by the Administrator for such personnel.)
- ATPE's currently qualified on the make, model, and series of aircraft, who have completed the particular operator's AQP evaluator qualification curriculum, who maintain continuing evaluator qualification under the particular operator's AQP, and who have been authorized by the responsible Flight Standards District Office (FSDO) manager to conduct such evaluations
- Aircrew program managers (APM) qualified on the make, model, and series of aircraft, who have attended the particular operator's AQP evaluator qualification training program (APM's must complete the same proficiency, currency and recurrent training requirements as the operator's check airmen, with the exception of line checks. APM responsibilities under AQP remain as specified in volume 5, chapter 6.)

785. AIRMAN CERTIFICATION DOCUMENTS. Execution of FAA Form 8710-1 is no different under AQP than under a traditional FAR Part 121 or 135 program, except as follows:

A. On side one, under block II-E "Completion of Air Carrier's Approved Training Program," section 3, "Which Curriculum," pilot applicants shall enter either "AQP Qualification" or "AQP Continuing Qualification," and no other blocks in section 3.

B. On the reverse side under "Evaluator's Record for Airline Transport Certificate/Rating Only," the authorized examiner or FAA inspector shall check only the block entitled "Advanced Qualification Program," and sign the document in the space provided next to that block. No other blocks or signatures under that section shall be accomplished.

C. Persons authorized to conduct airman certification evaluations under an AQP shall issue either a "Temporary Airman Certificate" (FAA Form 8060-4) or a "Notice of Disapproval of Application" (FAA Form 8060-5) for each certification evaluation conducted. The completed file shall be transmitted through the responsible FSDO in accordance with existing FAA directives.

786.–796. RESERVED.

[PAGES 3–451 THROUGH 3–460 RESERVED]

CHAPTER 4. THE ADVANCED QUALIFICATION PROGRAM

SECTION 4. ADVANCED QUALIFICATION PROGRAM SURVEILLANCE

797. GENERAL. Surveillance activities on approved advanced qualification program (AQP) certificate holders and training centers shall be conducted in accordance with the guidance provided in volume 6.

799. REPORTING ON SURVEILLANCE. When reporting surveillance actions on an AQP-approved certificate holder or training center for any of the inspection activities listed in this section, inspectors shall ensure that the letters "AQP" are annotated in the "National Use" field of FAA Form 8000-36, "Program Tracking and Reporting Subsystem Data Sheet."

801. SPECIFIC TYPES OF INSPECTIONS. The following surveillance activities are applicable to AQP:

- Cabin En Route Inspections (Program Tracking and Reporting Subsystem (PTRS) Code 1625)
- Cockpit En Route Inspections (PTRS Code 1624)
- Manuals Inspections (PTRS Code 1621)
- Overwater En Route Inspections (PTRS Code 1624)
- Proficiency and Competency Check Inspections (PTRS Code 1632)
- Crew and Dispatcher Records Inspections (PTRS Code 1627)
- Line Check Inspections (PTRS Code 1633)
- Federal Aviation Regulations (FAR) Part 121 Pilot-In-Command (PIC) Operating Experience Observations (PTRS Codes 1356 and 1631)
- Training Program Inspections (PTRS Code 1628)

802.–1044. RESERVED.

[PAGES 3–462 THROUGH 3–524 RESERVED]

other than the operational control department, but must establish procedures by which operational control personnel can verify that these requirements have been accomplished.

1165. CREW MEDICAL QUALIFICATION AND PROCEDURES DURING TEMPORARY MEDICAL DEFICIENCY.

A. Responsibility of Operators and Flight Crewmembers. FAR § 61.53 and FAR § 63.19 preclude required flight crewmembers from flight duty while they have a known medical or physical deficiency. These sections rely solely on the ability of flight crewmembers to honestly determine their medical fitness. It is incumbent on individual airmen to be certain that they have no illness or physical impairment that would affect their medical fitness for flight. The NTSB believes that air carrier operators should share the responsibility for verifying flight crewmembers' medical fitness for flight duty. However, it is not always easy for operators to determine the extent of a crewmember's medical fitness. In order to maintain the highest level of safety, required flight crewmembers must not fly under conditions that would make them unable to meet the requirements for their current medical certificate. This decision should not be influenced by fear of company reprisals.

B. POI Responsibility. POI's should encourage their assigned air carriers to have established sick leave policies and procedures, especially those concerning the release of flight crewmembers from duty when they develop sudden temporary illnesses, such as colds, flu, or fevers. These policies and procedures should not discourage flight crewmembers from taking sick leave when they are ill.

1166.–1174. RESERVED.

[PAGES 3-596 THROUGH 3-602 RESERVED]

CHAPTER 8. AIR CARRIER MANAGEMENT EFFECTIVENESS

SECTION 1. SCOPE AND CONCEPTS

1473. GENERAL. The Department of Transportation (DOT) is dedicated to, and the flying public expects, the highest degree of safety in air transportation and air commerce. Section 44702(b) of Title 49, United States Code (U.S.C.) (formerly § 601(b) of the Federal Aviation Act (FA Act) of 1958) requires the Administrator to emphasize the role of safety in all air carrier operations. Accordingly, air carriers shall have as their highest priority the assignment and maintenance of safety. The issue of safety permeates both managerial competence and compliance disposition. This section describes the responsibilities of air carrier management and the required methods of program implementation.

A. Air Carrier Management Responsibilities. Air carrier management has the responsibility for recognizing procedures that fail to attain the goal of safety. However, it is not enough for an experienced and capable air carrier management to be prepared to step in only when problems arise, nor is it enough for air carrier management to correct problems only as they are brought to its attention by outside agencies such as the Federal Aviation Administration (FAA). Management expertise entails taking an active role, not simply reacting to events. It requires taking the initiative to ensure a safe operation. It is not sufficient for management personnel to establish policies and procedures; they must also ensure that the policies and procedures are effective and that employees implement and follow them. Management may be held accountable for compliance problems even if they do not have actual knowledge of the problems, if they should have known of the carrier's safety and compliance deficiencies.

B. Role of the Department of Transportation. Under the provisions of §§ 41711 and 44709 respectively of Title 49, U.S.C. (formerly §§ 415 and 609(a) of the FA Act), the DOT, when necessary, may inquire at any time into the management of the business of any air carrier. Further, the DOT and/or FAA may reinspect any air operator and, if necessary, may amend, modify, suspend, or revoke an air carrier operating certificate or DOT Economic Authority.

1475. MANAGEMENT OVERVIEW.

A. Safe Operations. Air carrier management has the responsibility to conduct safe operations and to ensure regulatory compliance. To achieve this purpose, air carrier management must accomplish the following:

- Ensure that it possesses and maintains both the intent and ability to comply with the laws governing the airlines' operations, particularly the FAA's safety regulations
- Establish a high level management position to direct continuing analysis and surveillance program functions (This position shall have the authority to investigate, report, change inspection/maintenance programs, require training, or change procedures as necessary to provide the high degree of safety mandated by Title 49, U.S.C.)
- Ensure that personnel in positions such as check airman, designated maintenance examiner (DME), instructor, and those with required inspection item (RII) authority possess the higher level of responsibility necessary to perform to the standards incumbent on their positions
- Strive to exceed minimum Federal Aviation Regulations (FAR) requirements in all areas of air carrier responsibility
- Acquire and utilize all of the elements needed for safe operation, including a competent and willing workforce
- Demonstrate the ability and willingness to work with the FAA to ensure continued safe operations

B. Internal Evaluation Program. Air carriers are encouraged to develop internal evaluation programs that continually monitor company policies and procedures and ensure that the highest level of safety compliance is maintained. This auditing effort must also encompass those companies from which parts and services are procured.

C. Voluntary Self-Disclosure Program. Air carriers may voluntarily self-disclose apparent violations of the FAR even if an internal evaluation program is not established. FAA Advisory Circular (AC) 120-56, "Air Carrier Voluntary Disclosure Reporting Procedures," sets forth the procedures for the voluntary reporting process. The FAA believes that the open sharing of apparent violations and a cooperative, advisory approach to solving problems will enhance and promote aviation safety.

1477. AIR CARRIER COMPLIANCE ALERT INDICATORS. The FAA has identified certain air carrier compliance alert indicators that are areas of concern in certificate holder operations that may accompany potential safety deficiencies. Some of these indicators are as follows:

- Failure to prevent and correct operational problems that compromise safety
- Operational policies and programs that inhibit the ability to resolve safety-related problems
- Repeated violation of regulations designed to ensure compliance with safety standards
- When the FAA, through increased surveillance, must assume an ongoing quality control role at the air carrier
- Increases in accidents, incidents, violations, and emergencies
- Slow or incomplete implementation of new regulations and programs
- A major change in operating scope, such as significant route expansion, fleet expansion, and introduction of new aircraft or personnel
- Corporate and management problems, such as poor or non-existent internal audit procedures and limited experience levels of management personnel
- Significant increases in employee turnover
- Financial or labor/management problems, such as bankruptcies or strikes
- Major increases in wet or dry lease activity
- Corporate mergers

1479. EMPHASIS AREAS. A safe and compliant airworthiness operation includes a trained and experienced work force, adequate technical guidance, adequate time for maintenance, and an effective quality assurance program. Trends that negatively affect airworthiness and safety have been identified through inspections conducted by the FAA and DOD. Some standard areas of inspection are as follows:

- Training programs
- Manuals and procedures
- Recordkeeping systems
- Flight and rest times
- Operational control
- Use of minimum equipment lists (MEL) and configuration deviation lists (CDL)

1481. TRAINING PROGRAMS. Training programs are systems of instruction that include curriculums, facilities, instructors, instructional delivery methods, and testing and checking procedures. A program must satisfy the training requirements of FAR Parts 121 and 135 and ensure that each employee remains adequately trained for each aircraft operation in which that person serves.

A. Effectiveness. Effective training of all personnel is critical in order for an operator to gain and maintain the highest level of proficiency and safety.

B. Need for Flexibility. All air carrier operations are directly influenced by changes within the company or in industry in general. These changes will normally result in a need to revise training curriculums. Changes that may dictate revision of training include the following:

- Management personnel
- Regulatory requirements
- Equipment
- Financial status
- Scope of operation
- Public demands

C. Evaluation. When any one or more of these changes occur, the air carrier should re-evaluate its training program.

D. Instilling Respect for Compliance and Safety. The respect that management personnel have for compliance and safety can directly affect the attitudes their employees have toward compliance and safety. Some indicators of effectiveness in developing positive attitudes toward compliance and safety through a training program are the following:

- Credible, qualified, and motivated instructors
- Positive student attitude toward training
- Achievement of satisfactory results after testing
- Professional behavior traceable to effective training

- Training presented in a timely manner (for example, training in cold weather operation before the winter months)
- Company-instilled atmosphere of reward for self improvement and professionalism

NOTE: Volume 3, chapter 2, contains detailed information on training programs.

1483. MANUALS AND PROCEDURES. The FAR require certificate holders, except for single-pilot operators, to have and maintain a general operations manual (GOM). The GOM is the one document that best describes the operator's methods of conducting business and assigning responsibilities to its employees. The content of the manual may vary, depending upon the operator's size and scope. The manual, when required, must have complete and detailed information for all employees to perform their duties. FAR Parts 121 and 135 contain the minimum content requirements.

NOTE: See volume 3, chapter 15, "Manuals, Procedures, and Checklists," for detailed information.

1485. RECORDKEEPING SYSTEMS. Situations involving the presence of one or more of the compliance alert indicators outlined in paragraph 1477 of this section usually change the capability and character of the affected certificate holder. A transition period often follows when the original capabilities of the certificate holder are in a state of change until new capabilities have been established and stabilized. Air carriers must be on the alert for changes in operating philosophy that could cause negative changes in attitude on the part of their employees toward professionalism, compliance, and safety. Air carrier management's increased surveillance of its recordkeeping may be necessary to more carefully monitor the system. In other cases, particularly if a change is made to the recordkeeping system, FAA acceptance or approval will be required, along with a more aggressive approach to the surveillance itself.

NOTE: Familiarity with recordkeeping requirements is important for inspectors and air carrier management. See the following: FAR § 121.681 through § 121.715, or FAR §§ 135.63 and 135.65, as appropriate; and volume 3, chapter 11; and volume 6, chapter 2.

A. Definition. A record is an account of an occurrence or event and includes proof of the event's occurrence through certification by signature or other means.

B. Errors and Omissions. Minor errors and omissions may not constitute a lack of compliance on the part of the operator and may not require enforcement action.

C. Regulatory Requirements. FAR Parts 121 and 135 require that operators maintain records on crewmembers and dispatchers participating in flight operations, as well as on aspects of aircraft flight operation and aircraft maintenance deficiency reporting.

1487. FLIGHTCREW SCHEDULING. The physical and mental condition of employees is directly related to the sleep, rest, and relaxation they receive. Management personnel should employ fatigue countermeasure strategies to ensure that employees are adequately rested before they accept a flight time assignment. Some employees, such as flight crewmembers, must receive a minimum amount of rest before flight. The required rest times are varied, and depend upon the particular FAR under which the crewmember operates.

A. Required Records. Certificate holders must maintain records showing flight and rest period times for each flight crewmember. There is no single method approved by the FAA to maintain these records. The certificate holder may use any method, including computer records, that clearly show the rest periods and flight times of each flight crewmember.

(1) FAR Part 121. FAR Part 121 has a number of different requirements based upon the type of certificate held. There are flight time limitations and rest requirements for domestic operators, flag operators, supplemental air carriers, and commercial operators. FAR Part 121 also places restrictions on duty times for dispatchers under domestic and flag operations.

(2) FAR Part 135. FAR Part 135, like FAR Part 121, has a number of different operating conditions and types of flying (scheduled versus non-scheduled, one or more pilots) that determine the number of flight hours a pilot may accrue during a given period. There are also circumstances in which a pilot may exceed the flight time limitations. Should that occur, the pilot must get additional rest before accepting a flight time assignment.

NOTE: The Office of the Chief Counsel has responded to numerous questions concerning flight and rest time. The questions and responses are in the Flight Standards Aviation Safety Analysis System (ASAS), Policy and Reference Subsystem. Air carriers that encounter a situation requiring an interpretation may find that it has already been addressed and entered in the Policy and Reference Subsystem.

B. Flightcrew Fatigue and Stress Indicators. There are a number of factors that affect crew functions and should be addressed by air carrier management. These factors directly affect a pilot's physical, mental, and overall well-being. It may be appropriate to reduce flight times and/or increase rest periods based upon the effects of the following causes of fatigue and stress:

- A large volume of passengers and baggage
- Climatic conditions, such as extreme heat and humidity, cold, frost, ice, and snow
- Long workdays
- Inadequate time allowed for meals
- Unavailability of food and drink
- Noisy working environments
- High number of instrument takeoffs, approaches, and landings
- Inordinate schedule demands and changes
- Low-experienced flightcrews
- Overnight accommodations not conducive to adequate rest
- Situations that compromise safety, such as insufficient rest times, exceeding MEL limits, and other operational excesses

1489. OPERATIONAL CONTROL. Air carrier operators conduct operational control by making decisions and performing those actions on a daily basis that are necessary to operate flights safely and in compliance with applicable regulations. Air carrier operational control systems vary with the kind of operation the operator is authorized to conduct, the complexity of the operation, the means of communication, and the persons who are involved in preparing for and conducting flights under the operator's system. There are three general operational control systems: flight dispatch, flight-following, and flight-locating.

A. Flight Dispatch Systems. FAR §§ 121.533 and 121.535 require that both flag and domestic operators employ certificated aircraft dispatchers to exercise control of flights. FAR § 121.99 requires that flag and domestic operators provide radio communication facilities that are capable of quickly and reliably contacting a flight at all points while en route.

B. Flight-Following Systems. FAR § 121.537 places the major responsibility for the operational control of supplemental air carriers and commercial operators with the director of operations (DO) and the pilot-in-command (PIC). The DO may delegate the functions for initiation, continuation, diversion and termination of a flight to other employees, but the DO retains full responsibility for those functions.

C. Flight-Locating Systems. FAR §§ 135.23 and 135.77 require that the name and title of each individual authorized to exercise operational control be listed in the operator's GOM. A FAR Part 135 operator may delegate the authority for a specific flight to the PIC, but the operator always retains full responsibility.

(1) Operator Responsibility. It is the responsibility of the air carrier to ensure that all functions required, such as crew scheduling, load planning, and aircraft routing, be accomplished before the flight is authorized to depart. The operator must establish an internal communications system and administrative procedures that will ensure the achievement of the required functions.

(2) FAA Responsibility. It is the responsibility of the FAA to evaluate the certificate holder's operational control system to ensure that the system complies with the applicable regulations. The system must be effective and provide for the highest level of safety in the operation being conducted. The FAA must be aware of any management problems that may lead to system breakdown. Some indicators of potential problems may be any of the following:

- Personnel not knowledgeable, competent, or proficient
- Inadequate communications systems
- Inadequate facilities
- Above-average workloads
- Poor or improper procedures
- Ineffective training
- Any of the air carrier compliance alert indicators listed in paragraph 1477

NOTE: Air carriers that are certificated under FAR Parts 121 or 135 are authorized to conduct training flights under the provisions of FAR Part 91. Therefore, there are no dispatch or flight-locating requirements for those operations. Operations conducted while on special flight permits are required to operate under FAR Part 91. These flights should be conducted on an FAA flight plan to facilitate search and rescue operations, in case the aircraft become overdue or lost. Also, company personnel should be available and in a position to communicate with the aircraft if necessary.

NOTE: For detailed information on operational control, see volume 3, chapter 6, section 1.

1491. USE OF MEL AND CDL. Another area in which air carrier management must be especially observant, when involved in situations created by any of the indicators set forth in paragraph 1477, is that of MEL and CDL requirements and procedures. The presence of one or more of the indicators will usually change the capability and character of the affected certificate holder. Any breakdown or degradation of MEL and CDL procedures due to management ineffectiveness, or from any other cause, could have an immediate and significant impact on flight safety.

1492.–1550. RESERVED.

[PAGES 3-702 THROUGH 3-716 RESERVED]

CHAPTER 11. OPERATOR RECORDKEEPING

SECTION 3. CURRENCY PERIODS FOR RECORDS

1807. GENERAL. Principal operations inspectors (POI) shall determine if an operator's recordkeeping system provides the necessary documentation to demonstrate compliance with the Federal Aviation Regulations (FAR). Adequate historical data must be maintained by the operator to enable the POI to determine compliance at any time. This section contains information and guidance to be used by POI's when determining the necessary currency periods for records.

1809. CATEGORIES OF RECORDS. In order to demonstrate regulatory compliance, training and qualification records must be retained to document currency and prerequisite qualification.

A. Permanent Records. Permanent records are the documentation of the successful completion of training or qualification events that are prerequisites for subsequent assignments. These records must be retained for the duration of the individual's employment with that operator to substantiate the individual's qualifications. Examples of permanent records include the following:

- Basic indoctrination records
- Initial qualification records
- Transition and upgrade aircraft training records
- Required operating experience (OE) observation of by FAA inspector records

B. Currency Records. Currency records are the documentation of training or qualification events that qualify individuals for their present assignments and are required to be reaccomplished at scheduled intervals. In order to show continuity of qualification, this type of record must be retained until superseded by a record of similar training or qualification.

NOTE: Many operators revise FAR § 21.409 line-oriented flight training (LOFT) scenarios annually in order to preclude any crewmember from receiving the same scenario more than once. An operator that revises LOFT scenarios less frequently should be required to maintain additional records to ensure that the crewmember does not receive the same scenario in two consecutive training cycles.

C. Records of Action. Regulations require that an operator record each action taken concerning the release from employment or physical or professional disqualification of any flight crewmember or aircraft dispatcher and keep the record for at least 6 calendar months.

NOTE: For FAR Part 121 operators, permanent records, including records of action, may be discarded 6 months after release, termination, or disqualification from employment. For FAR Part 135 operators, these records may be discarded after 12 months.

D. Additional Records. The operator may need to keep additional records as a condition of special operational authorizations. For example, a record of successful operation is required before the Federal Aviation Administration (FAA) can grant approval to increase the extended-range operations with two-engine airplanes (ETOPS) en route alternate time requirements from 90 to 120 minutes. Operators may be required to keep additional training and qualification data in order to justify changes in the authorization of such areas as ETOPS, training hour reductions, and operations specifications. POI's should encourage operators to establish additional recordkeeping for analysis purposes. Operators may depersonalize those records not required by the FAR.

NOTE: Operators that have been granted exemption to the FAR may be required by the terms of those exemptions to retain additional records for a specified period.

1811. CURRENCY PERIODS FOR RECORDKEEPING SYSTEMS. When evaluating any recordkeeping system, POI's shall ensure that the system has the capability for entry, storage, retrieval, and archiving of all required records in the categories of records for which the operator is seeking acceptance or approval (see job aids 3.11.3.1. and 3.11.3.2. for currency periods and regulatory references).

1813. RECOMMENDED ADVANCED QUALIFICATION PROGRAM (AQP) CURRENCY PERIODS. The AQP recordkeeping requirements are similar to those discussed in paragraphs 1809 and 1811; however, some differences do exist. POI's should read the sections on AQP in volume 3, chapter 4, and see Advisory Circular (AC) 120-54, "Advanced Qualification Program," chapter 9, section 5, for detailed guidance.

NOTE: Job Aid 3.11.3.1. is not intended for use with AQP.

1814.–1826. RESERVED.

JOB AID 3.11.3.1.
CREWMEMBER TRAINING AND QUALIFICATION RECORDS PARTS 121 AND 135

Type of Record	Airman Position	Relevant FAR	Currency Period
Proficiency Check	Pilot-In-Command (PIC)	121.441 and 135.63	8 months; 14 months if qualified in two aircraft; 20 months if alternating recurrent LOFT with proficiency checks and recurrent training
	Second-In-Command (SIC)		14 months
	Flight Engineer (FE)		14 months
Recurrent Flight Training	PIC	121.427 and 135.63	8 months; 14 months if qualified in two aircraft; 20 months if alternating recurrent LOFT with proficiency checks and recurrent training
	SIC		14 months
	FE		14 months
Flight Attendant (F/A) Competency Check/Test	F/A	121.421 (initial)	permanent
		121.427	14 months
		135.351 (recurrent quiz/review)	14 months

CHAPTER 12. ENVIRONMENTAL CONSIDERATIONS AND RESPONSIBILITIES

SECTION 2. AIRCRAFT NOISE

1861. PERTINENT REGULATIONS AND ORDERS.

A. As a result of § 44715 of Title 49, United States Code (U.S.C.) (formerly § 611 of the Federal Aviation Act (FA Act) of 1958), the Federal Aviation Administration (FAA) adopted Federal Aviation Regulations (FAR) Part 36, which establishes noise standards for issuance of aircraft type certificates, changes to those certificates, and to standard airworthiness certificates. To complement FAR Part 36, the FAA issued FAR Part 91, Subpart I, requiring civil, subsonic turbojet aircraft over 75,000 pounds, which do not meet the FAR Part 36 noise standards, to be modified by January 1, 1985, if these aircraft are to operate at United States (U.S.) airports.

B. Special Federal Aviation Regulation (SFAR) 47, effective February 26, 1985, provides for limited issuance of special flight authorizations to conduct certain nonrevenue operations that are otherwise prohibited by the noise restrictions in FAR Part 91, Subpart I. Permissible operations include flights to an airport for alterations to achieve noise compliance, for exportation of the aircraft, and for scrapping the airplane. These special flight authorizations are issued by the Office of Environment and Energy (AEE-1).

C. FAA Order 1050.13, "Replacement, Apportionment, and Compliance Plans Submitted Under Subpart E of FAR Part 91," (this order predates Subpart I) establishes procedures and assigns responsibilities for aircraft noise compliance plans submitted by U.S. operators under Subpart I of FAR Part 91.

1863. FLIGHT STANDARDS RESPONSIBILITIES. As of January 1, 1985, all civil turbojet aircraft with maximum weights of more than 75,000 pounds that are U.S. registered and have standard airworthiness certificates (or equivalent aircraft that are foreign registered) operating into U.S. airports, must have been shown to comply with Stage 2 or Stage 3 noise levels as specified in Appendix C of FAR Part 36. The showing of compliance, for aircraft issued original standard airworthiness certificates after the appropriate dates specified in FAR § 36.1, is accomplished during the aircraft certification process. Operators of these aircraft automatically comply with FAR Part 91, Subpart I, aircraft noise requirements and no specific flight standards responsibilities are defined. Operators of aircraft issued original standard airworthiness certificates before the appropriate dates specified in FAR § 36.1 were required by FAR Part 91, Subpart I, to make a specific showing of compliance or submit a compliance plan and status reports to AEE-1. Alternatively, the operator may apply for an exemption from that office. Questions concerning a specific aircraft type or a specific operator's compliance status with FAR Part 91, Subpart I, should be directed to AEE-110. In addition, AEE-110 will provide copies of compliance plans, status reports, and any exemptions upon request. With respect to aircraft noise and FAR Part 91, Subpart I, requirements, Flight Standards inspectors are responsible for the following:

A. For any flight operation suspected of being in violation of FAR Part 91, Subpart I, inspectors must initiate an investigation and prepare an Enforcement Investigation Report (EIR), if appropriate (see FAA Order 2150.3A, "Compliance and Enforcement Program"). Upon initiation of an investigation, AEE-1 and the Regional Flight Standards Division (RFSD) shall be notified. Assistance may be requested from these offices if considered necessary.

B. When known, the RFSD will be notified of any operator who has failed to submit the compliance plans and status reports required by FAR § 91.813. The Flight Standards division will also be notified when it is suspected that an operator has failed to comply with its submitted compliance plan. The Flight Standards division will, in turn, notify AEE-1 and regional counsel. Flight Standards field inspectors will take action only when directed by the RFSD in coordination with both the regional counsel and AEE-1.

C. Inspectors shall surveil assigned FAR Part 121, 125, and 135 certificate holders (including FAR Part 125 deviation holders) who operate Stage 1 aircraft under FAR § 91.801 to determine the following:

- That an appropriate exemption (either under FAR Part 11 or FAR § 91.811) is aboard each aircraft

- That the operator continues to provide AEE-1 with current compliance plan status reports as required by FAR § 91.813 (FAA Order 1050.13 provides additional information on required compliance plans and status reports.)
- That the operator is complying with all exemption restrictions, such as night curfews

D. District offices having responsibility for FAR Part 129 operators should conduct liaison and/or surveillance as necessary to determine compliance with the FAR Part 91 noise limits (the operator is using only aircraft that are compliant or exempted). Suspected violations must be investigated, and an EIR must be prepared, if appropriate.

E. Inspectors shall surveil flight operations conducted under SFAR 47 to determine the following:

- That a special flight authorization is on board the airplane during all operations at U.S. airports
- That the operator is complying with all conditions and limitations established by the authorization
- That the airplane has an appropriate airworthiness certificate or ferry permit to perform the flight

1865. HEAVY AIRPLANE OPERATORS' COMPLIANCE WITH APPROVED NOISE ABATEMENT DEPARTURE PROFILES (NADP).

A. Background. To resolve a continuing problem of nonstandard NADP's, the FAA published an advisory circular (AC) that contains the minimum performance criteria for noise abatement vertical departure profiles where configuration (thrust and/or flap) changes are required below 1,500 feet above ground level (AGL) for noise. These minimum criteria were formalized in AC 91-53, "Noise Abatement Departure Profiles," dated July 22, 1993. This AC establishes minimum acceptable criteria for speed, thrust settings, airplane configurations, and the criteria for both the "Close-In" (for close-to-the-airport communities) and "Distant" (for distant airport communities) NADP's. These NADP's can be combined with preferential runway selection and flight path techniques to minimize the community noise impact.

B. Principal Operations Inspector (POI) Responsibilities.

(1) Familiarization with AC 91-53. POI's should become familiar with the material in AC 91-53 before approving an assigned certificate holder's NADP manual procedures. The certificate holder shall not use or be approved for any other departure profile (except as stated in FAR Part 91) that is not defined within the AC. FAR Part 91 departure procedures require an airplane to "climb to an altitude of 1,500 feet above the surface as rapidly as practicable," and are not required to conform to AC 91-53.

(2) Vertical Departure Profiles. POI's must ensure that all airplane vertical departure profiles (profiles with configuration changes below 1,500 feet) described in the certificate holder's operations and/or training manuals comply with the minimum criteria established in AC 91-53 for NADP's (Close-In and Distant). AC 91-53 offers the operator one means of complying with the noise abatement departure procedure, but not the only means. If the operator chooses a procedure that differs from the criteria in the AC, then the proposed procedure must be addressed by the certificate holder to the certificate holder's POI for concurrence by AFS-400 of the Flight Standards Service.

(3) Operations Specifications. POI's should review operations specifications nonstandard paragraph C68 before approving the certificate holder's operations specifications. Volume 3, chapter 1, section 5, paragraph 196, contains instructions for issuance of paragraph C68 for approval of the NADP's.

NOTE: POI's must review the certificate holder's operations and training manuals that describe the certificate holder's departure profiles for compliance with the minimum criteria as stated in the revised operations specifications paragraph C68.

1867. AIRTOUR AND SIGHTSEEING OPERATIONS.

A. Background. Aviation accidents within and around the Grand Canyon and other prominent tourist attractions have heightened public interest in safety of sightseeing and airtour operations. Also, patrons of the Grand Canyon and other national parks have expressed concern to their congressional representatives about the noise generated by overflying aircraft. Environmental lobby organizations have also expressed their concerns for potential environmental damage and harm to the natural inhabitants of these areas. Overuse of these natural preserves will impede their preservation for future generations.

B. Grand Canyon National Park and the State of Hawaii.

(1) Congressional concerns over air safety and aircraft noise resulted in the enactment of Public Law 100-91 on August 18, 1987. This law required a study of aircraft noise effect at a number of national parks.

The law also imposed flight restrictions at the following three parks: Grand Canyon National Park in Arizona, Yosemite National Park in California, and Haleakala National Park in Hawaii.

(2) Presently, the Grand Canyon National Park and the state of Hawaii are the only areas with special operating rules governing aircraft overflights and requirements for operators conducting sightseeing flights under FAR Part 135.

NOTE: SFAR 71 prescribes special operating rules for airplane and helicopter visual flight rules (VFR) airtour operations conducted in the state of Hawaii under FAR Parts 91 and 135. This rule does not apply to flights conducted in gliders or hot air balloons. Future revisions to this handbook will contain additional guidance concerning special operating rules for airtour operations in the state of Hawaii.

C. Identification of Other Scenic Areas. The appropriate FAA regional offices and Flight Standards District Offices (FSDO) are responsible for the acknowledgment and identification of scenic areas attracting airtours and sightseeing operations in each FAA region. These offices should encourage meetings of joint users in order to develop acceptable flight programs. The FAA Regional Environmental Office and Air Traffic Control Service (ATC) should be included in meetings for planning special-use airspaces. POI's should encourage all assigned operators, including non-certificated commercial sightseeing and FAR Part 135 operators, to cooperate in complying with procedures established for each scenic flight area. FSDO's should extensively distribute information regarding special routes to prevent conflicts among airspace users. The following procedures apply to POI's who are working with FAR Part 135 operators conducting airtour operations and with other operators conducting sightseeing operations in other areas under FAR Parts 91 and 135:

- Identifying scenic areas subject to airtour/sightseeing operations
- Identifying actual and potential airtour/sightseeing operators
- Coordinating with ATC, when appropriate, and with airspace users in cooperatively establishing recommended routes, entry/exit points, altitudes, direction of flight, and reporting points
- Encouraging the participation of non-certificated sightseeing operators

NOTE: An environmental impact study (EIS) may be required for any routes developed below 3,000 feet AGL.

D. Operations Specifications.

(1) Airtours and sightseeing flights conducted within the Grand Canyon National Park Special Flight Rules Area require FAR Part 135 operators to hold a special operations specifications authorization. Inspectors with operators aspiring to conduct operations within the Grand Canyon National Park Special Flight Rules Area should coordinate with the Western-Pacific regional office.

(2) Special regulations, which may be developed in the future for another area, park, or prominent attraction, should be identified, and any special operational authority should be listed as a note in paragraph B of the operations specifications. The suggested wording for such an entry follows:

Special Requirements: Note 1.
Airtour/sightseeing operations are authorized to be conducted over *[list appropriate area, river, or prominent point of interest]* in accordance with procedures outlined within the operator's operations manual.

(3) The routes and altitudes depicted in the operator's operations specifications should enhance collision avoidance procedures and aircraft noise abatement. The identification of sightseeing areas and routes does not relieve the pilot-in-command (PIC) from the responsibility to see and avoid other aircraft.

E. Operations Manual.

(1) The POI must coordinate with the Las Vegas FSDO through the Western-Pacific regional office in order to grant approval for an operator to conduct sightseeing and/or airtours in the Grand Canyon. Special programs developed through the Las Vegas FSDO require the operator to hold operations specifications that grant flight authority in Special Flight Rule airspace.

(2) For attractions and areas other than the Grand Canyon, POI's should recommend that operators have a chapter in their operations manual containing an outline of procedures for crewmembers conducting airtour/sightseeing operations. This chapter should contain the following:

(a) The airtour/sightseeing area should be clearly depicted on a chart and explained in words to ensure the reader's comprehension of the tour area.

(b) All tour area entry/exit points should be points for radio reports on a common-use air-to-air frequency.

(c) There should be a clear description of tour routes, altitudes, and reporting points.

(d) It should include procedures for obtaining current weather information and weather deviations. (The operator should consider higher VFR weather minimums for flight operations in high density traffic where airtour/sightseeing operators enter and depart special airspace.)

(e) Any collateral duties should be listed, such as the pilot narrating a tour or operating tape players for passengers. (These shall only be performed when the pilot's workload permits; compliance with FAR § 135.100(b) is still required.)

(f) There should be provision for additional crewmember training, if necessary. Ground and flight training may be required for each additional airtour/sightseeing operation.

1868. RESERVED

[PAGES 3-993 THROUGH 3-998 RESERVED]

CHAPTER 14. FLIGHT ATTENDANT TRAINING AND QUALIFICATION PROGRAMS

SECTION 4. FLIGHT ATTENDANT GENERAL EMERGENCY TRAINING CURRICULUM SEGMENT

1973. GENERAL. This section provides direction and guidance on the content, evaluation, and approval of the flight attendant (F/A) general emergency training curriculum segments. For direction and guidance on aircraft-specific emergency training, see volume 3, chapter 14, section 5, "Flight Attendant Ground Training."

A. Emergency training requirements are specified by Federal Aviation Regulations (FAR) § 121.417 and by FAR § 135.331. These FAR may be divided into two types of training, which will be referred to in this handbook as "general" emergency training and "aircraft-specific" emergency training. General emergency training is training on those emergency items that are common to all aircraft. An example of general emergency training is training on fire extinguishers and firefighting procedures—which would be applicable to all aircraft in the operator's fleet. Aircraft-specific emergency training is training on those items that are specific to each aircraft. An example of aircraft-specific emergency training is instruction on the location of emergency equipment and crewmember emergency assignments for a DC-9-30 aircraft.

B. The objective of general emergency training is to provide F/A's with the necessary knowledge concerning emergency equipment, situations, and procedures to ensure implementation of the correct actions in the event of an emergency.

C. When a certificate holder operates a number of different aircraft, it is to the certificate holder's advantage to obtain Federal Aviation Administration (FAA) approval for training curriculums that have distinct general emergency training and aircraft-specific emergency training segments. A certificate holder may, however, design a training curriculum that does not make a distinction between general emergency training and aircraft-specific training, such as when a certificate holder operates only one make and model of aircraft.

(1) General emergency training is required in the initial new-hire, recurrent, and requalification categories of training, but not in transition training. Only aircraft-specific emergency training is required in the transition category of training. A certificate holder may choose to limit initial new-hire training to a specific make and model of aircraft and then conduct transition training to qualify F/A's in each additional aircraft. When the F/A completes initial new-hire training, a training/checking month is established and general emergency training is not required again until the next recurrent training cycle.

(2) A certificate holder may choose to train its F/A's in all makes and models of aircraft in the operator's fleet during initial new-hire training. In this case, a general emergency training curriculum segment provides the basis for all aircraft-specific training to follow. If a general emergency training curriculum segment is not defined, the operator must duplicate this training on each specific aircraft type.

D. Wet Ditching Training and Drills.

(1) Water impact accidents, while they rarely occur, severely test the emergency procedure skills of all flight crewmembers. The chances of human survival from these types of accidents have been increased by advances in cabin design and better passenger safety awareness. However, improved aircrew emergency training is the major factor contributing to human survival.

(2) Principal operations inspectors (POI) should encourage their assigned air carriers to provide realistic environments for wet ditching training and drills. Training objectives should be accomplished in swimming pools or other safe aquatic environments using the flotation devices required to be on board the aircraft.

(3) Emergency equipment and drill training should be fully integrated into the operator's situational awareness training modules. POI's should ensure that inadvertent water impact accidents (ditch-

ing), such as those occurring with little or no warning, are emphasized during wet ditching training.

1975. GENERAL EMERGENCY TRAINING SUBJECT AREAS. In the F/A general emergency training curriculum segment there are three distinct subject areas of training that are required in the conduct of general emergency training. These three subject areas, which need to be covered in the curriculum segment modules, are as follows: "emergency equipment" training, "emergency situation" training, and "emergency drill" training. Emergency equipment training consists of individual instruction, demonstration, and practice in the functions and operation of emergency equipment, such as fire extinguishers and oxygen bottles. Emergency situation training consists of instruction in the factors involved and the procedures to be followed when emergency situations occur, such as training on ground evacuations and in-flight medical emergencies. Emergency drill training provides an opportunity for F/A's to perform emergency procedures with hands-on practice in the actual operation of emergency equipment, such as a firefighting drill with the use of a fire extinguisher and protective breathing equipment (PBE).

NOTE: While emergency drills are always designated under the general emergency training curriculum segment, these drills can be taught as either general to all aircraft or as aircraft-specific. In addition, the training modules for general emergency training must cover the necessary training for the type of operation performed by the operator. For example, when an operator conducts extended-overwater operations, the training modules must include training on the use of sliderafts or liferafts.

A. Emergency Equipment Training. FAR § 121.417(b)(2) requires training on certain equipment. In addition to the required equipment, training should be conducted on any additional emergency equipment located on the operator's aircraft such as demo equipment, cardiopulmonary resuscitation (CPR) equipment, cockpit key, seatbelt extensions, and lavatory smoke detectors. Inspectors shall ensure that training modules cover the function and operation of at least the following emergency equipment:

- Equipment used in ditching and evacuation
- First aid equipment (including its proper use)
- Portable fire extinguishers (with emphasis on type of fire extinguisher to be used for different classes of fires)
- Emergency exits in the emergency mode with the evacuation slide/raft pack attached, if applicable (with training emphasis on the operation of the exits under adverse conditions)

B. Emergency Situation Training.

(1) The second subject area, emergency situation training, must, according to FAR § 121.417(b)(1),(3), and (4); and FAR § 121.417(e), include training modules that cover emergency procedures and coordination among crewmembers in at least the following emergency situations:

- Rapid decompression
- Fire in flight or on the surface, and smoke control procedures (with emphasis on electrical equipment and related circuit breakers found in cabin areas including all galleys, service centers, lifts, lavatories and movie screens)
- Ditching and other evacuations (including the evacuation of persons and their attendants, if any, who may need the assistance of another person to move expeditiously to an exit in the event of an emergency)
- Illness, injury, or other abnormal situations involving passengers or crewmembers (to include familiarization with the emergency medical kit)
- Hijacking and other unusual situations
- Review and discussion of previous aircraft accidents or incidents pertaining to actual emergency situations
- For crewmembers who serve in operations above 25,000 feet, instruction in respiration, hypoxia, duration of consciousness without supplemental oxygen at altitude, gas expansion, gas bubble formation, physical phenomena and incidents of decompression

(2) Emergency situation training modules may also include information on any additional unusual situations that could result in an emergency situation, such as passengers who may jeopardize aircraft or passenger safety, turbulence, blown tires, and engine/auxiliary power unit (APU) torching.

C. Emergency Drill Training.

(1) The third subject area, emergency drill training, must, according to FAR § 121.417(c)(1)(2), include training modules that ensure crewmember accomplishment of these emergency drill requirements, as follows:

(a) The following one-time emergency drills must be performed by each crewmember during initial

training: the PBE/firefighting drill and the emergency evacuation drill.

(b) The following additional emergency drills must be accomplished during initial training and once every 24 calendar months during recurrent training—with each crewmember *performing* the following drills while operating the appropriate equipment: the emergency exit drill, hand fire extinguisher drill, emergency oxygen system drill, flotation device drill, and the ditching drill (if applicable).

(c) The following additional emergency drills must be accomplished during initial training and once every 24 calendar months during recurrent training—with each crewmember *observing* the following drills: liferaft removal and inflation drill; slideraft transfer drill; slide or slideraft deployment, inflation, and detachment drill; emergency evacuation slide drill.

(2) Emergency drill training modules may also include any additional drills deemed necessary by the operator, such as a CPR equipment drill or a megaphone drill.

NOTE: For the required differences in FAR Part 135 for each of the three training subject areas, see FAR § 135.331, "Crewmember Emergency Training."

D. One element of effective emergency training is to simulate realistic emergency situations by having participants actively involved in situational problem-solving activities. These types of activities provide students with the opportunity to practice emergency procedures in a controlled environment until proficiency is obtained. An example of a simulation for "emergency situation" training is one in which some F/A's prepare a "cabin" (classroom, mockup, or actual aircraft) for a land evacuation, while others assume the roles of crewmembers and passengers. An example of a situation for emergency drill training is one in which F/A's perform after-impact commands and actions while opening an emergency exit (in the emergency mode) and directing the evacuation of passengers.

1977. CONTENT OF F/A GENERAL EMERGENCY TRAINING CURRICULUM SEGMENT OUTLINE. A general emergency training curriculum segment outline must include appropriate modules of emergency equipment training, emergency situation training, and emergency drill training. The modules, elements, and events listed on the outline only have to contain enough detail to ensure that the FAR-required training is provided.

A. FAR § 121.417(b) and FAR § 135.331(b) specify that crewmembers must receive instruction in the function and operation of emergency "equipment" and the handling of emergency "situations." Emergency equipment training and emergency situation training are distinguished for the use of the building block approach to reinforce basic concepts. For example, emergency equipment training for the Halon fire extinguisher should provide training on the extinguisher's function and operation. Emergency situation training, however, should provide training on appropriate actions and commands to use when operating the Halon fire extinguisher in a particular firefighting situation.

B. FAR § 121.417(c) and FAR § 135.331(c) specify the emergency "drills" that crewmembers must perform and the equipment that must be operated during emergency training.

1979. GENERAL EMERGENCY TRAINING MODULES. A general emergency training curriculum segment must include as many training modules as necessary to ensure adequate training. Each training module outline must provide at least a descriptive title of the training module and a list of the related elements or events that are to be presented during instruction on the module.

A. The general emergency training module outline must contain sufficient elements or events to ensure that students will receive adequate training in the emergency equipment, emergency situation, and emergency drill subject areas. Operators do not have to include detailed descriptions of each element or event within a training module outline. Detailed descriptions are more appropriate when included in the operator's courseware. During the approval process, the POI should review courseware as necessary to ensure that the scope and depth of the training modules are adequate.

B. The training modules designated to fulfill the requirements of FAR § 121.417 are contained in both the general emergency training curriculum segment and the aircraft ground training curriculum segment. Operators have flexibility in the arrangement of general emergency training modules as follows:

(1) The training modules required by the FAR for general emergency training must be included in the general emergency training curriculum segment outline and counted toward the hour requirement for this curriculum segment. The sequence of the actual training can be determined by the operator. For example, while a module on decompression must be contained in the general training curriculum segment outline, the operator may actually conduct training on decompression procedures immediately before or after conducting training on a related aircraft-specific train-

ing module designated in the aircraft ground training curriculum segment.

(2) An operator may choose to put a training module in more than one curriculum segment. For approval purposes, however, that training module must be placed in the curriculum segment designated in this handbook. For example, FAR § 121.417 requires that a first aid training module be placed in the general emergency training curriculum segment. At the operator's discretion, however, the first aid training module could also be covered in the basic indoctrination curriculum segment.

C. The following is an example of one of the many acceptable methods of presenting a general emergency training module outline:

5. FIREFIGHTING EQUIPMENT

(a) Preflight: Inspection tags, dates, seals, proper charge levels, security of mounting, accessibility

(b) Individual Extinguishers: Removal, function, operation and operating techniques, cautions

(c) Classes of Fires: Appropriate extinguishers, specific firefighting techniques

(d) Protective Breathing Equipment, Smoke Goggles: Donning, use

(e) Lavatory Equipment: Integrity of trash container spring-loaded doors, smoke alarms, fire extinguishers, placards

Elements Within a Training Module

FYI: In the preceding example, the number and location of each type of fire extinguisher and its location on each aircraft are not included. These elements are included in the aircraft-specific emergency training module found in the F/A aircraft ground training curriculum segment (see section 5 of this chapter).

D. The following example illustrates the interrelationship between training modules in the F/A general emergency training curriculum segment:

FLIGHT ATTENDANT GENERAL EMERGENCY TRAINING CURRICULUM SEGMENT — *Title of Curriculum Segment*

A. Training Objective: That students will be able to recognize and evaluate an emergency situation and to properly implement and use the appropriate emergency procedures and equipment — *Statement of Training Objectives*

B. Emergency Situation Training: — *Title of Subject Area*

1. Basic Principles
2. Decompression
3. Fires
4. Ditching
5. Ground Evacuation
6. Unwarranted Evacuation
7. Illness or Injury
8. Abnormal Situations Involving Passengers or Crewmembers
9. Hijacking/Bomb Threat
10. Turbulence
11. Other Unusual Situations
12. Previous Aircraft Accidents and Incidents

— *Training Modules Within a Curriculum Segment*

3. Fires

(a) Principles of Combustion and Classes of Fires
(b) Fire Prevention
(c) Basic Firefighting Procedures
(d) Extinguishing Cabin Fires
(e) External Fires on Ground
(f) Electrical Equipment and Circuit Breakers

— *Elements Within a Training Module*

1981. EMERGENCY EQUIPMENT TRAINING MODULES. Emergency equipment training modules consist of instruction in the function and operation of that emergency equipment common to all aircraft that the student is qualifying for in the operator's fleet. Emergency equipment training must provide for the demonstration of emergency equipment that duplicates the specifications of the emergency equipment on the actual aircraft. For example, if the operator's fleet of aircraft is equipped with both portable oxygen bottles and chemical oxygen generators, then both types of oxygen devices must be used during the course of instruction. Any pertinent information related to the function of a piece of emergency equipment should also be addressed during the emergency equipment training. For example, the different types of fires must be addressed before adequate training can be given on the selection of appropriate fire extinguishers. Specifically, a training element for water fire extinguishers must emphasize that water extinguishers can only be used on Class A fires (ordinary combustibles).

FYI: Instruction on the operation and location of pieces of emergency equipment specific to each aircraft type is addressed in the aircraft-specific emergency training module found in the F/A aircraft ground training curriculum segment (see section 5 of this chapter).

A. Training Criteria. Emergency equipment training should be developed to ensure that F/A's meet the following knowledge and ability criteria:

- Use of proper preflight techniques (when part of F/A duties)
- Procedures to be used if equipment fails to meet preflight requirements

- Methods to be used for removing equipment from securing devices
- Methods to be used for properly securing equipment
- Operation of equipment, including awareness of operational limitations
- Functions of equipment, including operation under adverse conditions

NOTE: Passengers, at times, have consciously or inadvertently moved door operating mechanisms, even when the mechanisms are located under protective plastic covers. POI's should ensure that their assigned operators inform crewmembers of the potential problem of and the need to be alert to the possibility of passengers moving an exit mechanism, and have procedures for crewmembers on unpressurized aircraft to check the position of the door handles periodically during flight.

B. Training Module Content. The following are examples of training modules for the emergency equipment subject area. These examples of training modules encompass different types of operations and may not be applicable to an operator's specific type of operation. It should be noted that there are elements and events contained in these training modules that are not specified in the FAR, but that are intended to provide POI's with further examples of material that may be included in training modules. These are examples only, and it is not intended that these examples indicate the only acceptable methods, sequence of instructional delivery, subject titles, or amount of detail.

(1) Ditching Equipment.

- Preflight: Inspection tags; dates; pressures; accessibility; integrity of casings
- Life Preservers: Removal; function; donning; inflation; activation and deactivation of locator light; donning an adult vest on a small child or infant; special use for children, nonswimmers, handicapped, elderly; swimming techniques
- Flotation Seat Cushions: Removal; function; donning; swimming techniques
- Liferafts: Removal and handling; positioning; lanyard attachment; launching, including under adverse conditions; inflation; detachment from aircraft; boarding techniques
- Sliderafts: Deployment; inflation; detachment from aircraft; move from door to door; boarding techniques
- Slides: Deployment; inflation; detachment from aircraft for use as a flotation device; boarding techniques
- Raft Survival Equipment (Including Canopy and Survival Kit): Function; use
- Megaphones, Flashlights, Emergency Lights, Emergency Locator Transmitters, First Aid Kits: Removal; function; use; operation during a ditching

(2) Ground Evacuation Equipment.

- Preflight: Inspection tags; seals; dates; operable/pressures; security; accessibility
- Window Exit Escape Ropes: Removal; function; use during ditching or ground evacuation
- Slides or Sliderafts: Deployment; inflation; sliding techniques; use under adverse conditions
- Megaphones, Flashlights, Emergency Lights, Emergency Locator Transmitters: Removal; function; use; operation during ground evacuation

NOTE: The National Transportation Safety Board (NTSB) has indicated, in Safety Recommendation A-90-57, that there may be a need for a megaphone to be located in the upper deck passenger compartment of those B-747's in which passengers are permitted to be carried in the upper deck passenger compartment. FAR § 121.309(f)(2) requires two megaphones to be located in the passenger cabin on each airplane having a seating capacity of more than 99 passengers. One megaphone is to be located at the forward end of the passenger cabin and the other at the most rearward location where it would be readily accessible from a normal F/A seat. While there is no requirement for a megaphone to be located in the upper deck passenger compartment of a passenger-carrying B-747 for use in an emergency situation, the FAA believes it would be prudent for operators to install one. POI's shall encourage those certificate holders to install a megaphone in a location on the upper deck that would be readily accessible to an F/A to use during an emergency evacuation.

(3) First Aid Equipment.

- *Preflight:* Inspection tags; dates; integrity of casing; accessibility
- *Emergency Medical Kit:* Removal; contents; use, including reporting requirements
- *First Aid Kit:* Removal; contents; use

(4) Portable Oxygen Systems (Oxygen Bottles, Chemical Oxygen Generators, PBE).

- *Preflight:* Inspection tags; dates; seals; pressures; integrity of tubing and masks, casings, or smokehoods; security; accessibility
- *Portable Oxygen Devices/Masks (Oxygen Bottles and Chemical Oxygen Generators):* Removal and handling; function; operation including donning, activation, and cautions; procedure for administering oxygen to self, to passengers, and to persons with special oxygen needs; methods of securing an oxygen device while administering oxygen
- *PBE:* Removal; function; limitations; operation, including donning, activation, and cautions; use with fire extinguisher in a firefighting situation, including methods of maneuvering in limited space with reduced visibility; utilization of communications system
- *Passenger-Supplied Oxygen:* Function; operation; requirements for carriage

(5) Firefighting Equipment.

- *Preflight:* Inspection tags; dates; seals; proper charge levels; properly serviced; security of mounting; accessibility
- *Individual Extinguishers:* Removal; function; operation and operating techniques; cautions
- *Classes of Fires:* Appropriate extinguishers; specific firefighting techniques
- *PBE, Smoke Goggles:* Donning; use
- *Lavatory Equipment:* Integrity of trash container; spring-loaded doors; smoke alarms; fire extinguishers; placards

(6) Emergency Exits.

- *Exits with Slides or Sliderafts:* Preflight door seals; integrity and condition of girt bar and brackets; slide or slideraft connections and pressure indicators; slide or slideraft engaging/disengaging mechanism; markings and placards; door opening controls; signs; lights; assist handles; function; operation, including under adverse conditions; impact of wind, weather, and fire on slides
- *Window Exits:* Preflight window seals, window opening controls, markings, placards, signs, lights, tactile indicators for non-visual conditions; function; operation and positioning, including under adverse conditions

(7) Exits Without Slides: Preflight door seals; door opening controls; markings and placards; signs; lights; assist handles; function; operation, including under adverse conditions

(8) Additional Emergency Equipment.

- *Preflight:* Equipment integrity; equipment accessibility
- *Cockpit Key, Demo Equipment, CPR Equipment, Seatbelt Extensions, Lavatory Smoke Detectors:* Function; use

1983. EMERGENCY SITUATION TRAINING MODULES. Emergency situation training modules consist of instruction, demonstration, and practice in the handling of emergency situations common to all aircraft on which the student is qualifying in the operator's fleet. "Emergency situation" training provides the opportunity for the student to correlate the concepts developed in "emergency equipment" training with the procedural applications of various types of emergency situations that can occur. For example, this training could include instruction on the use of a water extinguisher on a seat cushion fire. To reinforce the development of these procedural concepts, emergency situation training should incorporate situational problem-solving activities that depict in-flight emergencies. These simulations should be as realistic as possible and should reflect the operator's type of operation.

> *FYI: Instruction for specific emergency assignments and procedures for each aircraft are addressed under aircraft-specific emergency training which is included in the F/A aircraft ground training curriculum segment (see section 5 of this chapter).*

A. Training Criteria. Emergency situation training should be developed to ensure that F/A's meet the following knowledge and ability criteria:

- Knowledge of crew coordination, emergency procedures, and emergency equipment
- Knowledge of each crewmember's emergency procedures, signals, and safety-related duties

- Ability to recognize an emergency situation and select appropriate procedures
- Ability to take the initiative and promptly implement the appropriate emergency procedures
- Ability to assume decisive leadership in the event flight crewmembers are incapacitated or unable to participate
- Knowledge of requirements for reporting accidents and incidents

B. Training Module Content. The following are examples of training modules for the emergency situation subject area. These examples of training modules encompass different types of operations and may not be applicable to an operator's specific type of operation. It should be noted that there are elements and events contained in these training modules which are not specified in the FAR but which are intended to provide POI's with further examples of material that may be included in training modules. These are examples only and it is not intended that these examples indicate the only acceptable methods, sequence of instructional delivery, subject titles, or amount of detail.

(1) Basic Principles:

- *General:* Types of emergencies; need for standardization of procedures between crewmembers; crew coordination and communication, including team responsibilities, assertive command and control, response initiation, passenger behavior and management

(2) Decompression:

- *General:* Causes and recognition of cabin pressure loss; physiological effects of reduced atmospheric pressure; time of useful consciousness
- *Rapid Decompression (Immediate Action/ Secondary Action Procedures):* Possible causes; cabin effects; physiological effects; crew coordination procedures; "immediate action procedures," including recognition of signs of decompression, grasping nearest oxygen mask, sitting down or holding onto something solid, waiting for notification from the flight deck before moving around; "secondary action procedures," including obtaining and putting on portable oxygen, checking other F/A's, assisting passengers, treating injuries, damage assessment and control
- *Insidious Decompression:* Possible causes; cabin effects; physiological effects; crew coordination; immediate action procedures
- *Cracked Window/Pressure Seal Leaks:* Cabin effects; crew coordination; immediate action procedures

(3) Fires:

- *Principles of Combustion and Classes of Fires:* Characteristics of an aircraft fire, including flash-over and time element; toxic fumes and chemical irritants; review of function and use of firefighting equipment; firefighting techniques; special factors, including cabin material flammability and toxicity; confined space; cabin ventilation
- *Fire Prevention:* F/A readiness; cabin checks, including stowage of articles which could contribute to fire; lavatory checks, including condition of trash container, spring-loaded door, smoke detectors, and fire extinguishers; galley checks, including ovens and electrical equipment; enforcement of smoking regulations; procedures for use of circuit breakers
- *Basic Firefighting Procedures:* Flight crewmember notification procedures; source identification; firefighting and crew coordination procedures; proper use of PBE; effective use of aircraft communication systems; methods of gaining access to a fire source; smoke control and removal procedures
- *Extinguishing Cabin Fires:* Crew coordination, including team response; procedures for extinguishing cabin fires to include lavatories; galleys/lower-lobe galleys; ovens; volatile fuel vapors; light ballasts; cabin furnishings; stowage bins/hatracks; trash containers; clothing
- *External Fires on Ground:* Crew coordination; role of F/A's for exterior aircraft, APU, jetway, ramp fires
- *Electrical Equipment and Circuit Breakers:* Procedures for circuit breaker use with galleys, service centers, lifts, lavatories, and movie screens

(4) Ditching:

- *Basic Practices:* Description of ditching and unanticipated water landings (prior to impact/after impact); crew notification, including time before touchdown, type of

landing, signal to assume protective brace position; crew coordination, including cabin and passenger preparation; passenger briefings; helper briefing; passenger protective brace positions ; F/A protective brace positions (forward-facing jumpseat—head forward, aft-facing jumpseat—head back); impact on water; assessing conditions; commands; opening primary/secondary exits; use of flotation devices; evacuation at overwing exits including use of escape ropes; redirection techniques; evacuating persons needing assistance; passenger control

- *Prior to Impact—Unanticipated:* F/A readiness; protective brace positions; commanding passengers to assume protective brace positions
- *After Impact—Unanticipated:* Assessing conditions; crew coordination procedures; releasing F/A seatbelts; ensuring activation of emergency lights; commanding passengers to release seatbelts and don individual flotation devices; assessing exits; redirection techniques; opening exits, including deploying flotation devices and commanding helpers to assist; commanding passengers to evacuate at exit, inflate vests, and use flotation devices; assisting incapacitated passengers and crewmembers; removing appropriate emergency equipment from aircraft
- *Prior to Impact—Anticipated:* Crew notification and coordination; passenger briefing and preparation; donning life vests; cabin preparation; helper briefings; assuming protective brace positions; F/A review of ditching duties
- *After Impact—Anticipated:* Assessing conditions; crew coordination procedures; releasing F/A seatbelts; ensuring activation of emergency lights; commanding passengers to release seatbelts; assessing exits; redirection techniques; opening exits, including deploying sliderafts or launching rafts, commanding helpers to assist;commanding passengers to evacuate at exit, inflate life vests, and board sliderafts or rafts; assisting incapacitated passengers and crewmembers; removing appropriate emergency equipment from aircraft
- *Evacuation Techniques:* Aircraft flotation characteristics; adverse conditions; assisting handicapped; directing passenger flow; boarding rafts
- *Survival at Sea:* Raft management; basic survival procedures in a raft environment; signalling

(5) *Ground Evacuation:*

- *Basic Practices:* Description of unanticipated and anticipated evacuations (prior to impact/after impact); crew notification, including time before touchdown, type of landing, signal to assume protective brace position; crew coordination, including cabin and passenger preparation; passenger briefings; helper briefings; passenger protective brace positions; F/A protective brace positions (forward-facing jumpseat—head forward, aft-facing jumpseat—head back); impact and post-crash fire; assessing conditions; initiation evacuation; commands; opening primary/secondary exits; evacuation at overwing exits, including use of escape ropes; redirection techniques; evacuating persons who may need assistance; passenger control
- *Prior to Impact—Unanticipated:* F/A readiness; assuming protective positions; commanding passengers to assume protective positions
- *Prior to Impact—Anticipated:* Crew notification and coordination; passenger briefing and preparation; cabin preparation; helper briefings; assuming protective positions; F/A review of evacuation duties
- *After Impact—Unanticipated or Anticipated:* Assessing conditions; crew coordination procedures; releasing F/A seatbelts; ensuring activation of emergency lights; initiation of evacuation, including decision and signal to evacuate or not to evacuate; commanding passengers to release seatbelts and evacuate; assessing exits; redirection techniques; opening exits, including deploying slides; commanding helpers to assist; commanding passengers to evacuate at exit and run away from aircraft; assisting incapacitated passengers and crewmembers; removing appropriate emergency equipment from aircraft
- *Evacuation Techniques:* Aircraft landing attitudes; adverse conditions; assisting handicapped; directing passenger flow; slide egress

- *Post-Crash Rescue:* Role of F/A's
- *Survival in Uninhabited Area:* Group management; basic survival procedures on land

(6) *Unwarranted Evacuation:*

- *Passenger- or Crew-Initiated:* F/A readiness; assessing situation
- *Crew Coordination:* Method of communicating that an unwarranted evacuation is in progress
- *Stopping the Evacuation:* Commands; actions

(7) *Illness or Injury:*

- *General Principles of Care:* Effects of aircraft environment; crew medical responsibilities; crew coordination, including flightcrew notification; requesting and verification of medically qualified personnel; rules for administering medication; documentation and written reports; ground-to-air assistance; removal of ill or injured passengers
- *In-flight Medical Emergencies/Incidents:* Illness or injury symptom recognition and examination; attempt to obtain medical history; assessment of passenger; appropriate medical treatments; handling of passenger; aircraft limitations; crewmember incapacitation; apparent death in flight; review of contents and use of first aid equipment

(8) *Abnormal Situations Involving Passengers or Crewmembers:*

- *Passenger Abuse of F/A:* Crew coordination; recommended procedures
- *Passengers Who Appear to be Under the Influence of Intoxicating Substances:* Crew coordination; recommended procedures
- *Passengers Who May Jeopardize Aircraft or Passenger Safety:* Crew coordination; recommended procedures

(9) *Hijacking/Bomb Threat:*

- *Hijacking:* Specific company hijacking procedures; reinforcement of security training procedures; methods of communicating with other crewmembers when hijacking is threatened or in progress
- *Bomb Threat:* Specific company security procedures; reinforcement of security training procedures; crew coordination procedures; specific bomb search procedures; bomb handling and stabilization procedures for each aircraft

(10) *Turbulence:*

- *Basic Action (Dependent on Severity of Turbulence):* Flight crewmember notification procedures; communication procedures for securing passengers, crewmembers, cabin, galleys, serving carts
- *Severe Turbulence (Anticipated or Unanticipated):* Crew coordination procedures; appropriate actions
- *Mild Turbulence (Anticipated or Unanticipated):* Crew coordination procedures; appropriate actions

(11) *Other Unusual Situations (Recommended but not Required):*

- *Blown Tires:* F/A readiness
- *Condensation:* Passenger briefing; appropriate actions
- *Engine Shutdown:* Passenger briefing; appropriate actions
- *Engine/APU Torching:* Passenger briefing
- *Fuel Dumping:* Passenger briefing; appropriate actions
- *Rejected Landing/Missed Approach/ Rejected Takeoff:* F/A readiness
- *Malfunction of Lift Safety Interlock System:* Immediate actions and appropriate procedures

(12) *Previous Aircraft Accidents and Incidents:*

- *General:* Types and major causes of accidents; NTSB recommendations; survivability factors, including crewmember and passenger preparation for impact; ability of aircraft to withstand impact; ability of crewmembers to perform assigned duties after impact; emphasis on crew coordination and communication as critical elements in emergency situations
- *Accident/Incident Aftermath:* Coping with survival

1985. EMERGENCY DRILL TRAINING MODULES. Emergency drill training modules provide an opportunity for F/A's to gain experience in the performance of emergency procedures with the actual operation of emergency or safety equipment. Emer-

gency drill training consists of an integration of emergency equipment, emergency situation, and aircraft-specific training. These drills can be taught as either general to all aircraft or as aircraft-specific. For example, if all aircraft in an operator's fleet are equipped with the same type of portable oxygen bottle, the emergency drill would be taught as "general" to all aircraft. If, however, the aircraft in an operator's fleet are equipped with various types of portable oxygen bottles, the emergency drill would be taught as "aircraft-specific." The sequence of emergency drill training should be adjusted according to the complexity of the operator's type and number of aircraft, training mockups, and other training devices. For certain emergency drills it is appropriate to sequence emergency drill training after aircraft-specific training. For example, emergency drill training on emergency exits is more effective after training on the functions and controls of the emergency exits for specific aircraft. Emergency drill training is the performance and demonstration phase of emergency training. The objective of this training is to train each F/A to proficiency by reinforcing the concepts developed in the instruction phase of emergency training. The drills require the use of the specific type of emergency equipment as the equipment that is installed on the operator's aircraft; the equipment must have the identical dimensions, weight, forces, and specifications. Each of the drills should be as realistic as possible. For example, if artificial smoke is not used in an emergency evacuation drill, attempts should be made to simulate darkened conditions.

A. Training Criteria. Emergency drill training should be developed to ensure that F/A's obtain proficiency in emergency situations and have the ability to do the following:

- Correctly preflight and prepare emergency/safety equipment for each type of aircraft (when part of assigned duties)
- Identify the type of emergency and correctly utilize the appropriate emergency equipment
- Exercise good judgment in assessing an emergency situation
- Implement the appropriate emergency procedures and to coordinate actions and signals with other crewmembers
- Operate emergency/safety equipment for each type of aircraft
- Communicate effectively with crewmembers and passengers in an emergency situation

B. Training Module Content. The following are examples of training modules for the emergency equipment subject area. These examples of training modules encompass different types of operations and may not be applicable to an operator's specific type of operation. It should be noted that there are elements and events contained in these training modules which are not specified by the FAR but which are intended to provide POI's with further examples for consideration when evaluating training module content. These are examples only, and it is not intended that these examples indicate the only acceptable methods, sequence of instructional delivery, subject titles, or amount of detail.

1987. EMERGENCY DRILLS.

A. One-Time Emergency Drill Requirements. The following emergency drills are required to be accomplished at least one time during initial new-hire training (for the one-time emergency drill requirements of transition training see section 5 of this chapter). Included with each emergency drill are recommended elements or events that F/A's should be able to demonstrate satisfactorily.

(1) PBE Firefighting Drill. During a PBE firefighting drill, the student is required to fight an "actual" fire by actually discharging a fire extinguisher charged with the appropriate fire retardant agent while wearing PBE. PBE must be worn while fighting the actual fire. The following recommended elements and events apply to fighting the fire:

- *Approach to Fire/Smoke:* Ability to locate source of fire or smoke
- *Crew Coordination:* Ability to implement procedures for effective crew coordination and communication, including notification of flight crewmembers about fire situation
- *Donning and Activating PBE:* Ability to maneuver in limited space with reduced visibility and to effectively use the aircraft's communication system
- *Selection of Appropriate Fire Extinguisher:* Ability to identify class of fire; to select the appropriate extinguisher; to properly remove extinguisher from securing device
- *Actual Discharge of Fire Extinguisher on Fire:* Ability to prepare extinguisher for use; to operate and discharge extinguisher properly; to utilize correct firefighting techniques for type of fire
- *Fire Saturation:* Ability to completely extinguish fire

(2) Emergency Evacuation Drill. During an emergency evacuation drill, each student is required

to egress the aircraft or approved training device using at least one type of installed emergency evacuation slide.

- *Prior to Impact:* Ability to recognize and evaluate emergency; to assume appropriate protective position; to command passengers to assume protective position
- *After Impact:* Ability to implement crew coordination procedures; to release seatbelt; to ensure activation of emergency lights; to assess aircraft conditions; to initiate evacuation (dependent on signal or decision); to command passengers to release seatbelts and evacuate; to assess exit and redirect, if necessary; to open exit, including deploying slides and commanding helpers to assist; to command passengers to evacuate at exit and run away from aircraft
- *Actual Exit on Emergency Evacuation Slide:* Ability to correctly jump onto slide; to maintain correct body position while sliding; to land on feet and run away from aircraft
- *Special Sliding Techniques:* Awareness of methods for assisting special need passengers, such as handicapped, elderly, and persons in a state of panic

B. Additional Emergency Drill Requirements. The following emergency drills must be accomplished by students during initial new-hire and initial equipment training, and once every 24 calendar months during recurrent training. Included with each emergency drill are recommended elements or events that F/A's should be able to demonstrate satisfactorily.

(1) Emergency Exit Drill. During an emergency exit drill, students must operate each type of emergency exit in the normal and emergency modes, including the actions and forces required for deployment of the emergency evacuation slides.

- *Preflight Exit:* Ability to correctly preflight each type of emergency exit and evacuation slide or slideraft (if part of F/A's assigned duties)
- *Actual Disarming and Opening of Each Type of Door Exit in Normal Mode:* Ability to open exit properly by disarming door either manually or automatically; to verify girt bar disengagement; to assume correct body position; to use door controls correctly; to secure exit in open and locked position; to secure safety strap
- *Actual Closing of Each Type of Door Exit in Normal Mode:* Ability to close exit properly by removing safety strap (if installed); to release locking mechanism; to assume correct body position; to use door controls correctly; to secure exit in closed and locked position
- *Actual Arming of Each Type of Door Exit in Emergency Mode:* Ability to arm exit properly by checking if threshold is free of debris; to arm door either manually or automatically; to verify girt bar engagement
- *Actual Opening of Each Type of Door Exit in Emergency Mode:* Ability to open exit properly by assuming correct body/protective position; to use door controls correctly; to ensure that door is in open and locked position; to use manual slide inflation system to accomplish or ensure slide or slideraft inflation
- *Actual Opening of Each Type of Window Exit:* Ability to open exit properly by assuming correct body/protective position; to use controls correctly; to place window safely; to remove escape rope and position for use

(2) Hand Fire Extinguisher Drill. During a hand fire extinguisher drill, students must operate and discharge each type of installed hand fire extinguisher (such as Halon 1211, water, carbon dioxide, and dry chemical fire extinguishers). Fighting an actual or a simulated fire is not necessary during this drill.

- *Preflight:* Ability to correctly preflight each type of hand fire extinguisher (if part of F/A's assigned duties)
- *Operation:* Ability to correctly operate each type of hand fire extinguisher and to implement appropriate firefighting procedures; to locate source of fire or smoke and identify class of fire; to select appropriate extinguisher and remove from securing device; to prepare extinguisher for use; to actually operate and discharge extinguisher; to utilize correct firefighting techniques for type of fire

NOTE: The discharge of Halon extinguishing agents during firefighting drills is not appropriate unless a training facility is used that is specifically designed to prevent harm to the environment from the discharged Halon. When such facilities are not used, other fire extinguishing agents that are not damaging to the environment should be used during the drills.

- *Crew Coordination:* Ability to implement procedures for effective crew coordination and communication, including notification of flight crewmembers about the type of fire situation

(3) Emergency Oxygen System Drill. During an emergency oxygen system drill, each student must operate each type of emergency oxygen system, including PBE.

- *Preflight and Operation of Portable Oxygen Devices:* Ability to correctly preflight (if part of F/A's assigned duties) and actually operate portable oxygen bottles, including masks and tubing; ability to preflight and verbally demonstrate operation of chemical oxygen generators, including procedures for administering oxygen
- *Administering Oxygen from Portable Oxygen Bottles:* Ability to properly remove from securing device; to prepare for use; to operate oxygen device properly, including donning and activation; to administer oxygen to self, passengers, and to those persons with special oxygen needs; to utilize proper procedures for effective crew coordination and communication
- *Preflight and Operation of PBE:* Ability to correctly preflight (if required) and properly put on equipment; to actually activate equipment and maneuver in limited space with reduced visibility; to utilize the aircraft's communication system for effective crew coordination

NOTE: Several operators equip their aircraft with approved PBE units that have approved storage pouches fastened with two metal staples at one end. However, considerations of practicality and cost compel operators to use a less durable storage pouch for training purposes, one that lacks the staple fasteners. As a result, pilots and F/A's have been surprised that opening the pouch furnished on board requires more force than opening the training pouch. POI's should require crewmember training that includes the appropriate procedures for operating PBE. In those cases where pouches with staples are used for storage of the PBE unit, special emphasis in training should highlight the difference between the training pouch and the onboard pouch. The training pouch may be easy to open, but the approved, onboard pouch may require as much as 28 pounds of force to overcome the 2 staple fasteners.

- *Utilization of Aircraft Oxygen System:* Ability to manually open each type of oxygen mask compartment and deploy oxygen masks; to identify compartments with extra oxygen masks; to implement immediate action decompression procedures; to reset oxygen system (if applicable)

(4) Flotation Device Drill. During a flotation device drill, the student must put on, use, and inflate (as applicable) each type of individual flotation device.

- *Preflight:* Ability to correctly preflight (if part of F/A's assigned duties) each type of individual flotation device
- *Donning and Inflating Life Vests:* Ability to locate and remove from packaging; to properly put on and inflate (automatically and manually); to activate and deactivate locator light; to put on a small child or infant; to instruct children, nonswimmers, handicapped, and elderly on how to use and when to inflate; to demonstrate swimming techniques with a life vest
- *Flotation Seat Cushions:* Ability to remove from seat and properly use; to demonstrate swimming techniques using a seat cushion

(5) Ditching Drill (if applicable). During a ditching drill, students must perform the "prior to impact" and "after impact" procedures for a ditching, as appropriate to the specific operator's type of operation.

- *Crew Coordination:* Ability to implement crew coordination procedures, including briefing with captain to obtain pertinent ditching information and briefing F/A's; to coordinate timeframe for cabin and passenger preparation
- *Passenger Briefing:* Ability to adequately brief passengers on ditching procedures, including information on the removal and stowage of restrictive personal articles; removal, donning, inflation of life vests; positioning of seats and tray tables; stowage of carry-on baggage; securing and release of seatbelts; appropriate brace positions; location of exits; location and boarding of rafts; helper briefings
- *Passenger and Cabin Preparation:* Ability to ensure that all passenger briefing procedures are implemented properly; to ensure that cabin is prepared, including the securing of carry-on baggage, lavatories, and galleys

- *Launching of Sliderafts or Rafts:* Ability to assess conditions; to demonstrate how to properly deploy and inflate sliderafts; to remove, position, attach to aircraft, and inflate rafts; to use escape ropes at overwing exits; to command helpers to assist; to use slides and seat cushions as flotation devices; to remove appropriate emergency equipment from aircraft
- *Boarding of Passengers and Crew into Slideraft or Raft:* Ability to command passengers to exit aircraft, to inflate life vests, to board rafts properly; to initiate raft management procedures, including disconnecting rafts from aircraft, applying immediate first aid, rescuing persons in water, salvaging floating rations and equipment, deploying sea anchor, tying rafts together, activating or ensuring emergency locator transmitter in operation; to initiate basic survival procedures, including removing and utilizing survival kit items, repairing and maintaining raft, ensuring protection from exposure, erecting canopy, communicating location, providing continued first aid, providing sustenance
- *Use of Life Lines:* Ability to use heaving line to rescue persons in water; to tie sliderafts or rafts together; to use life line on edge of slideraft or raft as a handhold and to secure survival kit items

(6) Liferaft Removal and Inflation Drill (if applicable). During a liferaft removal and inflation drill, students must observe the removal of a liferaft from the aircraft or training device, as well as the inflation of a liferaft.

- *Raft Removal:* Removal of raft from raft compartment, including using correct method of handling raft; positioning raft at exit; removing raft lanyard; securely attaching raft lanyard to aircraft interior before raft launching; commanding helpers to assist
- *Raft Launching and Inflation:* Ensuring that exit is open and usable; launching raft into water and inflating raft; commanding passengers to evacuate at exit and board raft; detaching raft from aircraft; commanding helpers to assist; initiating raft management and basic survival procedures
- *Raft Launching at Window Exits:* Removing and positioning raft from raft compartment to window exit; removing raft lanyard; securely attaching raft lanyard to aircraft interior; ensuring that window exit is open and usable; removing escape rope and attaching to fitting on wing; carrying raft onto wing and launching raft off leading edge of wing into water; inflating raft; commanding passengers to evacuate at window exit, to walk onto wing holding escape rope, and to board raft; detaching raft from aircraft; commanding helpers to assist

(7) Slideraft Transfer Drill. During a slideraft transfer drill, students must observe the transfer of each type of slideraft pack from an unusable door to a usable door.

- *Disconnecting Slideraft at Unusable Door:* Crew coordination procedures, assessing conditions to determine usable door, redirecting passengers to usable slideraft, completing specific steps for slideraft disconnection at unusable door
- *Slideraft Installation and Deployment at Usable Door:* Positioning slideraft pack at usable door, completing specific steps for slideraft installation at usable door

(8) Slide or Slideraft Deployment, Inflation, and Detachment Drill. During a slide or slideraft deployment, inflation, and detachment drill, students must observe the deployment, inflation, and detachment of the slide or slideraft pack from the aircraft or training device.

- *Slides With Quick-Release Handle:* Engaging slide girt bar in floor brackets; opening of door and verification of slide deployment; inflating slide either manually or automatically; disconnecting slide from aircraft for use as a flotation device
- *Slides Without Quick-Release Handle:* Engaging slide girt bar in floor brackets; opening door and verifying slide deployment; disconnecting slide from aircraft; inflating slide for use as a flotation device
- *Sliderafts:* Arming sliderafts for automatic inflation; opening door and verifying inflation; disconnecting slideraft from the aircraft

(9) Emergency Evacuation Slide Drill. During an emergency evacuation slide drill, students must observe the deployment and inflation of an evacuation slide, including participants egressing from the cabin via the evacuation slide.

- *Opening Exit:* Opening armed exit with slide or slideraft deployment and inflation

- *Evacuation of Aircraft:* Commanding the evacuation; having participants egress from aircraft via the evacuation slide and run away to a safe distance

NOTE: In drills No. 6, 7, 8, and 9, F/A's are not required to actually remove and inflate liferafts or to deploy, inflate, detach, or transfer slides or sliderafts. FAR § 121.417(c)(2)(ii), however, requires that these drills at least be observed. FAR § 121.417(f) defines "perform" and "observed." "Perform" is defined as the accomplishment of "a prescribed emergency drill using established procedures that stress the skill of those persons involved in the drill." "Observe" is defined as watching "without participating actively in the drill." When evaluating an "observed" drill, either with audiovisual aids or with participants performing the drill, the inspector must determine whether it adequately conveys a clear understanding of each of the steps involved to perform a required function.

1989. ADAPTATION OF GENERAL EMERGENCY TRAINING CURRICULUM SEGMENTS TO THE VARIOUS CATEGORIES OF TRAINING. The general emergency training curriculum segment is required in the following categories of training: initial new-hire, recurrent, and requalification. When determining if general emergency training curriculum segments are appropriately adapted to the different categories of training, POI's should use table 3.14.4.1.

A. Initial New-Hire Category of Training. Operators must develop and obtain approval of a general emergency training curriculum segment for the initial new-hire category of training. An operator who operates both reciprocating-powered and turbojet-powered aircraft may be required to develop separate general emergency curriculum segments for incorporation into the initial new-hire category of training appropriate to these types of aircraft.

B. Transition Category of Training. There is requirement for a separate general emergency curriculum segment for the transition category of training. For this category of training, F/A's will have previously received the appropriate general emergency training during initial new-hire training. Aircraft-specific emergency training, however, must be included in the aircraft ground training segment of a transition curriculum. Aircraft-specific emergency training may require elements that are in a general emergency training curriculum segment. For example, an operator may not operate an aircraft equipped with escape slides. If the operator subsequently adds an aircraft so equipped, training on slides must be included in transition training.

C. Recurrent Category of Training.

(1) FAR Part 121. FAR Part 121 operators must develop and obtain approval for a separate general emergency training curriculum segment for the recurrent category of training. Usually it will be appropriate to have two general emergency curriculum segments, one which reflects a 12-month cycle of emergency equipment and emergency situation training, and another which reflects a 24-month cycle of emergency drill training. It is acceptable, however, to incorporate the emergency drill "hands-on" training into a single curriculum segment, provided the segment contains a requirement that F/A's must receive the emergency drill training at least once every 24 months.

(2) FAR Part 135. FAR Part 135 operators should develop and obtain approval for a separate general emergency training curriculum segment for the recurrent category of training. The recurrent general emergency curriculum segment must contain "hands-on" training in each annual cycle.

D. Requalification Category of Training—FAR Parts 121 and 135. The determination of whether a general emergency curriculum segment is appropriate for the requalification category of training depends on the length of time an F/A has been unqualified. In general, F/A's become unqualified for not completing recurrent training for more than 1 year.

1991. CURRICULUM SEGMENT COMPLETION REQUIREMENTS. Completion of the curriculum segment must be certified by an instructor or a supervisor indicating that the student has successfully completed the course. This certification is usually based on the satisfactory evaluation of a student's performance. With some training methods, such as computer-based instruction (CBI), the certification may be based on student progress checks administered during the course.

1993. EVALUATION OF TRAINING HOURS.

A. FAR Parts 121 and 135 do not specify a minimum number of training hours for general emergency training curriculum segments. When approving these curriculum segments, the FAA must consider the complexity of the type of operation to be conducted and the complexity of the aircraft to be used. The following table provides guidance and direction for POI's when approving general emergency training curriculum segments. The table provides "national norms" for the initial new-hire general emergency training hours. The purpose of having established national norms is to assist the POI when evaluating

proposed programs for new operators or when evaluating proposed programs introducing new aircraft by existing operators. For a complex type of operation the training hours may need to exceed the national norm, while for a less complex type of operation the training hours below the national norm may be acceptable. National norms have not been established for recurrent general emergency training.

TABLE 3.14.4.1.

TRAINING HOURS			
TYPE OF OPERATION	EMERGENCY EQUIP/ SITUATIONS	EMERGENCY DRILLS	TOTAL HOURS
LAND OPERATIONS	10.0	4.0	14.0
EXTENDED OVERWATER OPERATIONS	4.0	3.0	7.0
OPERATIONS ABOVE 25,000 FEET	2.0	1.0	3.0

B. Table 3.14.4.1. lists three general levels of operational complexity. The basic level of complexity for the initial new-hire training category is considered to be "land operations." The national norm for land operations is 14 hours for the general emergency training curriculum segment, divided into 10 hours for emergency equipment/situations and the remaining 4 hours for emergency drills. The national norm for "extended overwater operations" is an additional 7 hours divided into 4 hours for emergency equipment/ situations and the remaining 3 hours for emergency drills. The national norm for "operations above 25,000 feet" is an additional 3 hours, divided into 2 hours for emergency equipment/situations and the remaining 1 hour for emergency drills. For an operator conducting all three operational complexities, the national norm is a total of 24 hours for the general emergency training curriculum segment.

1995. EVALUATION OF CABIN AND EXIT MOCKUPS. Hands-on emergency drill training for items such as emergency exits and passenger oxygen systems should be conducted in either a static aircraft, an approved cabin mockup training device, or an approved exit mockup training device. Cabin and exit mockup training devices should be representative of a full-scale section of an aircraft. Cabin mockups should include operational doors, window exits, slides, rafts, and other equipment used in emergency drill training. Cabin or exit mockup training devices shall not be approved unless they have been evaluated by an FAA inspector and determined to be adequate. Generally, cabin mockups are acceptable if they are representative of the operator's aircraft with the appropriate equipment installed, and they are full-scale in cross section. Generally, exit mockups are acceptable if the forces required to open them closely duplicate normal and emergency conditions with the slide or slideraft installed, and if the mechanisms and instructions required to operate them are representative of the operator's aircraft.

1997. EVALUATION OF F/A GENERAL EMERGENCY TRAINING CURRICULUM SEGMENT OUTLINE FOR INITIAL APPROVAL. When evaluating a general emergency training curriculum segment outline for initial approval, inspectors must determine whether the training modules contain the information required for F/A's to perform emergency duties and procedures without supervision. Inspectors should use the job aid in this section when evaluating the proposed curriculum segment outline (see figure 3.14.4.1.).

1999. F/A GENERAL EMERGENCY CURRICULUM SEGMENT JOB AID.

A. The F/A General Emergency Curriculum Segment Job Aid (see figure 3.14.4.1.) is provided to assist the inspector when evaluating this curriculum segment. This job aid covers the three distinct subject areas of general emergency training: "emergency equipment" training, "emergency situation" training, and "emergency drill" training. The job aid is intended to assist inspectors during the evaluation of individual general emergency training curriculum segment modules.

B. When using the job aid, an inspector should make a side-by-side comparison of the operator's proposal to make the following determinations:

- Whether the training modules provide for training on the required elements and events in terms of F/A duties and procedures

- Whether sufficient training module elements and events are outlined to ensure that the appropriate depth and scope of the material will be presented

C. The job aid is organized with training subjects listed vertically in the left column and evaluation criteria listed horizontally across the top. Inspectors may use the spaces within the matrix for items such as notes, comments, dates, or checkmarks. There are also blank columns and rows on the job aid for inspectors to include additional training modules or evaluation criteria.

2000.–2010. RESERVED.

FIGURE 3.14.4.1.
F/A GENERAL EMERGENCY CURRICULUM SEGMENT JOB AID
SUBJECT AREA 1: EMERGENCY EQUIPMENT TRAINING

TRAINING SUBJECTS	EVALUATION CRITERIA			
	ADEQUACY OF ELEMENTS/ EVENTS	ADEQUACY OF COURSEWARE	TRAINING AIDS AND FACILITIES	
Ditching Equipment*				
Ground Evacuation Equipment*				
First Aid Equipment*				
Portable Oxygen Systems				
Firefighting Equipment*				
Emergency Exits				
Additional Emergency Equipment				

*Required by FAR § 135.331(b)(2)

FIGURE 3.14.4.1.—Continued
F/A GENERAL EMERGENCY CURRICULUM SEGMENT JOB AID
SUBJECT AREA 2: EMERGENCY SITUATION TRAINING

TRAINING SUBJECTS	EVALUATION CRITERIA			
	ADEQUACY OF ELEMENTS/ EVENTS	ADEQUACY OF COURSEWARE	TRAINING AIDS AND FACILITIES	
Decompression*				
Fires*				
Ditching*				
Ground Evacuation*				
Unwarranted Evacuation				
Illness or Injury*				
Abnormal Situation with Passenger or Crewmember*				
Hijacking/Bomb Threat*				
Turbulence				
Other Unusual Situations*				

*Required by FAR § 135.331(b)(3)

FIGURE 3.14.4.1.—Continued
F/A GENERAL EMERGENCY CURRICULUM SEGMENT JOB AID
SUBJECT AREA 3: EMERGENCY DRILL TRAINING

TRAINING SUBJECTS	EVALUATION CRITERIA			
	ADEQUACY OF ELEMENTS/ EVENTS	ADEQUACY OF COURSEWARE	TRAINING AIDS AND FACILITIES	
ONE-TIME DRILLS: Initial New-Hire Training				
PBE/Firefighting				
Emergency Evacuation*				
PERFORMANCE DRILLS: Initial New-Hire and Initial Equipment Training; Once Every 24 Months During Recurrent Training				
Emergency Exit*				
Hand-Held Fire Extinguishers*				
Emergency Oxygen System*				
Flotation Devices*				
Ditching*				
OBSERVATION DRILLS: Initial New-Hire and Initial Equipment Training; Once Every 24 Months During Recurrent Training				
Liferaft Removal and Inflation*				
Slideraft Transfer				
Slideraft Deployment, Inflation, and Detachment				
Emergency Evacuation/Slide				

*Required by FAR § 135.331(c) (Time Sequence not specified.)

[PAGES 3-1093 THROUGH 3-1104 RESERVED]

CHAPTER 15. MANUALS, PROCEDURES, AND CHECKLISTS

SECTION 2. APPROVAL AND ACCEPTANCE OF MANUALS AND CHECKLISTS

2099. GENERAL. This section contains direction and guidance for principal operations inspectors (POI) when approving or accepting an operator's manuals and checklists. This process is based on the general process for approval or acceptance described in volume 1, chapter 4, section 6, of this handbook.

A. The Approval Process. The approval process for a Federal Aviation Regulations (FAR) Part 121 operator's checklist normally consists of phases one, two, three, and five of the general process. It may be necessary, however, for a POI to require that phase four (the demonstration phase) be included in the approval process.

B. The Acceptance Process. The acceptance process for a manual, manual section, or a FAR Part 135 operator's checklist normally consists of phases one, two, and three of the general process. The operator must submit current copies of required manuals to the POI, and in the case of FAR Part 135 operators, the operator must also submit aircraft checklists for Federal Aviation Administration (FAA) review. An operator's entire manual system must be reviewed during the document compliance phase of initial certification (see volume 2, chapter 2, section 3, of this handbook). Once an operator is certified, the operator may revise, distribute, and use accepted material even though the POI has not completed a review of it. If, after a thorough review, the POI determines that portions of the manuals or checklists are unacceptable, the operator must revise the unacceptable portions.

NOTE: Each phase of the general process for approval or acceptance is discussed as if it is separate and distinct; however, at times the phases may overlap.

C. Evaluation of Manuals for FAA Acceptance or Approval. An operator may develop and publish in its manual any policy, method, procedure, or checklist that the operator finds necessary for the type of operations conducted. These policies, methods, procedures, and checklists, however, must comply with the FAR and be consistent with safe operating practices. POI's should encourage operators to be innovative and progressive in developing such policies, methods, procedures, and checklists. The POI's role in the review process is to provide an independent and objective evaluation of the operator's manual material. The POI must ensure that the operator's material complies with the FAR, is consistent with safe operating practices, and is based on sound rationale or demonstrated effectiveness.

D. Discrepancies. When a POI finds a discrepancy in an operator's existing manual material, the POI shall take action to have that discrepancy resolved. Usually such discrepancies can be resolved through informal discussions. When an informal discussion cannot resolve the discrepancy, however, the POI is required to formally withdraw FAA approval or acceptance from the operator (see paragraph 2111 of this section for guidance on the formal actions that may be taken).

2101. PHASE ONE: ESTABLISHING A FRAMEWORK FOR REVIEW. The first phase of the approval or acceptance process begins with communication between the FAA and the operator (either a current certificate holder or an applicant for a certificate). There are three occasions when approval or acceptance of manuals and checklists is required, as follows:

- When an applicant applies for a certificate
- When an existing operator determines if a change is necessary
- When, as the result of an investigation or normal surveillance, the POI determines if a manual, a manual section, or a checklist is inadequate or deficient

A. Determining Basic Requirements Applicable to the Operator. The primary task of the POI during phase one is to determine the basic requirements that the operator must meet to obtain acceptance or approval of a manual or checklist. The POI must communicate these requirements to the operator. To do this, the POI should review the appropriate sections of this handbook (particularly figures 2.1.1.1. through 2.1.1.3. in volume 2, chapter 1, section 1) and any advisory circulars (AC), air carrier operating

bulletins (ACOB), exemptions the operator may hold or is applying for, operation specifications, and any deviations applicable to subjects the operator must address in its manual or checklist. Both the POI and the operator must clearly understand the topics and level of detail the operator is required to have in the material to be submitted during phase two of the process. During phase one, the POI should make the following determinations and communicate them to the operator:

- Whether the submission will involve approval or acceptance
- Whether there is a need for validation tests or other demonstrations
- Whether there is a need for supplementary documentation, analysis, or other data to support the submission

B. Methods for Manual or Checklist Organization. During phase one, the POI should inform the operator that there are various methods that can be used to organize and format those manuals, manual sections, and checklists requiring FAA approval/acceptance. The POI may inform the operator of the content of the following subparagraphs, which describe at least four possible methods that an operator may use:

(1) Limited Content. An operator may choose to limit the content of the manual solely to approved material. When this method is used, the entire manual must be accepted and the operator may not revise the manual without additional review by the POI. While this method facilitates FAA review and acceptance, the manual may be difficult to use because the intended user may have to frequently switch back and forth between the approved checklists and other manuals containing accepted material. When the operator chooses this method, POI's must ensure that a header or footer is on each page indicating that the material is FAA-approved.

(2) Grouping Material. An operator may choose to group the FAA-approved material in specified sections of the manual and place accepted material in the remaining sections. With this method, the POI must ensure that a header or footer is on each page of the approved sections indicating that the material on that page is FAA-approved. The operator may submit the approved and accepted sections to the POI as separate packages.

(3) Interspersed Material. An operator may choose to intersperse FAA-approved material and accepted material throughout the manual. When an operator chooses this method, the POI must ensure that the operator has clearly identified approved material each time it appears in the manual. This method of organization allows for efficient manual use, but makes the operator's publication process and the approval process difficult.

(4) "Approval Document." The operator may choose to place material in an "approval document" solely for the purpose of obtaining FAA approval of that material. An approval document is a document and therefore may not be used as a manual. After the document has been approved, the operator must develop user manuals that incorporate the approved information from the document along with detailed guidance and supplementary information. When this method is used, the user manuals are treated as "accepted" material and do not have to be individually approved. The POI must, however, review the user manuals to ensure that the information in them is consistent with the approval document. When using this method, the operator may revise the information in user manuals without prior FAA approval, provided the revision is consistent with, and does not conflict with, the information in the approval document. If the operator or the POI finds it necessary for the approval document to be revised, the operator must submit the proposed revision for review and approval. A revision to an approval document must be approved before the operator can incorporate the changed information into the user manuals. When an operator uses this method for submitting manual or checklist material for FAA approval, POI's must ensure that the operator has stated on the first page of the user manuals that the manual contains FAA-approved material. The manuals or checklists provided to the user, however, do not have to be specifically identified as being FAA-approved ones.

C. Submission of Material. During phase one, the POI should advise the operator on how to submit the documents, manuals, checklists, and subsequent revisions for approval or acceptance.

(1) FAA Approval Submission. For material that requires FAA approval, the POI should advise the operator to submit the following:

- Two copies of the document, manual, manual section, checklist, or revision to be approved; one copy of the printed version of the electronic checklist (as applicable); one copy of a report indicating differences between the proposed and current versions of the electronic checklist (as applicable); or
- One copy of the document, manual, manual section, checklist, or revision, and two cop-

ies of the page control sheets for the material (The page control sheets must show an appropriate revision number or original page number for each page and the effective date of each page.)

- A copy of any supporting documentation or analysis

(2) FAA Acceptance Submission. For material that is to be evaluated for acceptance by the FAA, the POI should advise the operator to submit the following:

- A copy of the manual, manual section, checklist, or revision to be reviewed
- A copy of the page control sheets for the material to be reviewed, when appropriate

D. Coordination of Submitted Documents. POI's should encourage operators to coordinate drafts of manuals and checklists and revisions before making a formal submission. Mutual agreement on major points should be reached between the operator and the POI before the material is put in final form. Operators should be advised by the POI's not to publish or distribute material requiring FAA approval until after they have received written notification that the material has been approved. An operator who prepares and distributes such material before receiving approval may have to make costly changes. The POI should encourage the operator to establish methods that streamline and simplify the process for both the operator and the POI.

2103. PHASE TWO: PRELIMINARY REVIEW. Phase two consists of the POI or a qualified inspector conducting a preliminary review (as opposed to a detailed analysis) of the operator's submission. This preliminary review is intended to ensure that the operator's submission is clear and contains all required documentation. The phase two review should be conducted promptly after receipt of the operator's submission. If, after preliminary review, the submission appears to be complete and of acceptable quality, or if the deficiencies are immediately brought to the operator's attention and can be quickly resolved, the POI may begin the phase three in-depth review (see paragraph 2105 of this section). If the submission is incomplete or obviously unapprovable or unacceptable, the process is terminated and the POI must immediately return the submission (preferably within 5 working days) with an explanation of the deficiencies. POI's should return the submission to the operator promptly so that the operator will not erroneously assume that the POI is continuing the process to the next phase.

2105. PHASE THREE: IN-DEPTH REVIEW. Phase three is a detailed analysis of the operator's submission. During this phase, a qualified inspector must review the operator's submission in detail to determine that the submission is complete and technically correct. The time to complete phase three depends on the scope and complexity of the submission. During the phase two preliminary review, the POI should determine whether the review can be completed within 10 working days. If any part of the submission requires FAA approval, and the POI determines that it will take longer than 10 working days to complete the review and approval process, the POI shall give the operator an estimate of the time it should take to complete the process.

A. The phase three review and analysis should confirm that the operator's submission conforms to, or is consistent with, the following:

- The FAR
- Criteria and guidance in this handbook
- The operator's operations specifications
- Criteria and guidance in AC's
- Applicable aircraft flight manuals, manufacturer's operating bulletins, and airworthiness directives
- Safe operating procedures
- The operator's cockpit resource management policies
- Flight Standardization Board (FSB) and Flight Operations Evaluations Board (FOEB) training recommendations

NOTE: The direction and guidance in this chapter for reviewing procedures and checklists have been developed after consultation with knowledgeable and experienced personnel in the air transportation industry, aircraft manufacturers, and the FAA. The information presented is considered to be the best guidance currently available on the topic. POI's should realize, however, that circumstances vary widely. The best set of procedures for one circumstance may not work well in another circumstance. Two recommendations may be in conflict. In such cases, the appropriate resolution must be achieved through compromise. For example, it may be more important for an operator's checklist and procedures design policies to be internally consistent than for an individual procedure to be designed in a specific way.

B. The POI should thoroughly consider the operator's experience and history when evaluating proce-

dures and checklists. When an operator has a history of successful operations, the POI should normally approve submissions consistent with the operator's existing procedures. When an operator has an incident or accident attributable to crew error, the POI must thoroughly examine the basic assumptions and policies in the design of the operator's checklists and operating procedures.

C. Review of electronic checklist modifications in applications with the ability to automatically detect the completion of an action shall include verification that this detection is based on monitored conditions that are consistent with the objective of the action (for example, a checklist action item for LANDING GEAR . . . DOWN would show complete on the sensing of the gear handle being down and the gear indication being down). The review and verification should be accomplished using a paper copy of the electronic checklist annotated with the monitored condition for each action whose completion is automatically detected.

2107. PHASE FOUR: VALIDATION TESTS. Operators should be encouraged by POI's to conduct validation tests of operating procedures and checklists during the development process. These validation tests should be conducted before the operator submits the proposed procedures and checklists for FAA review and approval. Whenever possible, the POI or a qualified inspector should observe these tests. Under certain circumstances, a validation test may have to be conducted after the phase three in-depth review. In other circumstances, especially for minor types of revisions or simple procedures or checklists, validation tests may not be warranted or appropriate. Before approving operating procedures and checklists, POI's should consider the following guidance concerning validation tests.

A. Aircraft operating procedures and checklists should be tested in realistic real-time scenarios, with a full crew complement.

B. Validation tests of normal procedures may be conducted in a flight simulator, in a flight training device, on training flights, or in conjunction with proving tests.

C. Validation tests of nonnormal, abnormal, and emergency procedures or checklists should be conducted in a flight simulator or training device. Tests of nonnormal and emergency procedures and checklists may be conducted in an aircraft; however, the operator must ensure that the test can be conducted safely. Testing of nonnormal and emergency procedures and checklists shall not be conducted during revenue service.

D. Operators may submit evidence that a qualified party (such as the manufacturer or another operator) has already conducted a validation test of a procedure or checklist. When such evidence is available, the POI should not require a validation test unless the operator's circumstances are significantly different from those in which the original tests were conducted.

E. Changes in the wording of a procedure may not actually change the procedure. In such cases, validation tests are not necessary.

F. POI's shall require that operators validate the safety and effectiveness of any addition, deletion, or change of sequence in the steps of a nonnormal or emergency checklist, through validation testing.

G. For those operators who intend to convert immediate action items to or from challenge-do-verify items on an emergency checklist, POI's shall require that they test the modified procedure to ensure that it is safe, effective, and has no adverse effects. POI's shall consult with the appropriate Aircraft Evaluation Group (AEG) before approving such changes.

H. The addition or deletion of individual items to a normal phase checklist does not usually need to be validated by a test. If the POI is of the opinion that the change significantly alters crewmember assignments or workload distribution, the POI shall require a validation test.

I. While electronic checklists must comply with the same guidelines discussed here, modification to an existing electronic checklist does not in itself require a validation test if the POI deems the modification to be minor.

2109. PHASE FIVE: GRANTING FAA APPROVAL. Phase five consists of the POI's granting FAA approval to manuals, manual sections, and checklists. During this phase the POI must formally notify the operator of the approval and also complete a specific record of the approval. For manuals, manual sections, and FAR Part 135 aircraft operating checklists, which are not required to have FAA approval, written notification of acceptance is not required and shall not be given (see paragraph 2099 of this section).

A. Notification of Approval. When the POI decides to approve a document, manual, manual section, or checklist, the following procedures apply:

(1) For a document, manual, or checklist that contains page control sheets, the POI shall annotate both copies of the page control sheets with the phrase "FAA-Approved." Under the words "FAA-Approved," POI's shall enter the effective date of approval and sign both copies. The operator may

preprint the words "FAA-Approved" and blank lines for the date and signature on the page control sheets, or the POI may use a stamp to add the approval annotation on each sheet.

(2) For manuals, manual sections, or checklists that do not contain page control sheets, the approval annotation must be placed by the POI on each page of the material. In this case the approval annotation must be made on two copies of the material. The annotation shall be the same as discussed in subparagraph 2109A(1). This procedure should be used only for very short manuals, manual sections, or checklists (usually fewer than five pages) or when the use of page control sheets is not practical or serves little purpose.

(3) When page control sheets are used, the POI shall return one copy of the annotated page control sheets to the operator. In the remaining cases, one copy of the approved material must be returned to the operator with a notification letter that states that the material is approved. This letter should also contain a statement advising the operator to maintain for its records the signed page control sheets or the material with the approval annotation. The POI shall retain the second copy of the signed page control sheets or the annotated material in the district office files.

(4) When electronic checklists are submitted for approval, the operator will prepare a release/cover sheet for the printed version of the electronic checklist. The release/cover sheet will contain the preprinted words and lines as discussed in subparagraph 2109A(1). The POI's annotation shall be the same as discussed in subparagraph 2109A(1).

B. Notification of Disapproval. The coordination, revision, and editing activities that take place throughout all phases of the process should eventually result in approved products. Under certain circumstances, however, it may be appropriate for the POI to terminate the process. For example, the operator may not take any action on the material for 30 days. To terminate the approval process, the POI shall return the entire submission to the operator with a letter stating that the FAA is unable to grant approval, along with the reasons why it cannot be granted.

C. District Office Records. The POI shall maintain a record of approval for each operator-submitted document, manual, manual section, and checklist. Records of approval to revisions of this material must also be maintained. The records should consist of page control sheets (or approved material if page control sheets are not used), notification letters, and any other related correspondence. While superseded portions of documents, manuals, or checklists do not have to be retained, POI's may retain this type of material if they determine that it is appropriate. The POI should include with the material in the operator's file a brief memorandum containing the reasons for retaining the material.

2111. NOTIFICATION OF DEFICIENCIES. When any portion of approved material that is currently in use is found to be deficient, the POI shall notify the operator and request prompt action to resolve the deficiency. Deficiencies can usually be resolved through an informal process; however, when this cannot be done, the POI must formally notify the operator by letter that the deficiency must be corrected.

A. Deficiency Involves FAA-Approved Material. If the deficiency involves FAA-approved material, the letter must contain a clear statement that FAA approval of the material will be withdrawn as of a specific date if corrective action is not taken. The letter should also contain a statement that the material does require FAA approval and that after the specified date, any operations without that approval will be in violation of the FAR.

B. Deficiency Involves Operator-Developed Material. If the deficiency involves operator-developed material that is accepted by the FAA, the letter should clearly indicate the material that is deficient and the reasons why it is deficient. If, after such notification, the operator still fails to take appropriate corrective action, the POI should attempt to negotiate a reasonable solution. When these attempts fail, the POI may, with Regional Flight Standards Division (RFSD) approval, amend the operator's operations specifications to withdraw the authorization for conducting the operations affected by the deficiency.

2113. EMERGENCY REVISIONS. For safety reasons, an operator may sometimes find it necessary to immediately revise FAA-approved material before there is an opportunity to coordinate the revision with the POI. In such cases, the operator should take action as necessary to make the revision effective (such as alert bulletins and dispatch messages). For example, an operator may become aware of a deficiency after business hours, on a weekend, or on a holiday. In such cases, the operator should take immediate action. When emergency revisions to FAA-approved material are made, the operator shall notify the POI of the revision at the earliest practical opportunity (preferably

the first working day after the action). Since there is a wide variety of reasons that an emergency revision action may be necessary, the POI must determine the best course of action to be taken after being notified of the emergency revision. POI's shall make assigned operators aware of this guidance.

2114.–2124. RESERVED.

[PAGES 3-2075 THROUGH 3-2080 RESERVED]

- Procedures for post-flight handling of passenger injury, illness, or incidents involving passenger altercations and interference with crewmembers
- Employee/passenger accidents and injuries
- Adverse weather conditions, such as tornadoes and hurricanes or other adverse conditions such as earthquakes (if such conditions are likely to occur at the operator's line stations)
- Emergency evacuation of aircraft while parked (This should include procedures for both the flightcrew and flight attendants (F/A's) to activate the aircraft emergency lighting systems during an emergency evacuation, regardless of the perceived ease with which an evacuation can be accomplished; and passenger egress procedures for crewmembers and other operations personnel. These procedures should include the requirement that whenever passengers are on board the aircraft prior to airplane movement on the surface, that at least one floor-level exit must be usable for the egress of passengers through normal or emergency means.)
- Aircraft rescue and firefighting (ARFF) emergency notification procedures while parked (POI's shall encourage their assigned operators to develop explicit ARFF emergency notification procedures for crewmembers and other operations personnel to employ in the event of an emergency occurrence on their aircraft while they are parked.)

NOTE: ARFF notification procedures apply to situations where ARFF equipment is located both on and off airports. These procedures should include information concerning (1) whom to notify (such as airport fire department, airport control tower, alternate facility if control tower is closed); (2) the means of notification to be used (such as jetway telephone, including ARFF telephone numbers; and aircraft radio communication system, including ARFF radio frequencies); and (3) the persons by job title whom the operator determines shall implement notification procedures in the event of an emergency occurrence on the operator's aircraft. For passenger-carrying operations, if the operator's ARFF procedures require its crewmembers to implement these procedures, then the following guidance should be included: In the event of an aircraft fire or other emergency scenario involving aircraft evacuation, the first actions of crewmembers and/or other personnel qualified in accordance with FAR § 121.391(a) should be to initiate the evacuation of the aircraft occupants. Once the crew has determined that all aircraft occupants have been evacuated, then the crewmember(s) designated by the operator should initiate the ARFF emergency notification procedures.

(8) Contract Services. POI's must ensure that the GOM and GMM, as appropriate, contain policy and guidance concerning the interrelationship between the operator's personnel and the personnel of organizations who provide contract services at line stations. Contractor personnel are required to be trained on operator-specific procedures. The appropriate manual must contain the specifications for the following: the types of training to be given to contractor personnel, who is responsible for providing the training, and who is responsible for keeping records of the training. Although the contractor may be delegated this responsibility, the operator has final responsibility.

(9) Trip Records. POI's must ensure that the operator's GOM contains policies, procedures, and guidance concerning the preparation and disposition of trip records at line stations. Trip records include documents such as dispatch and flight releases, flight plans, weather, NOTAM's, oceanic plotting charts, load manifests, and weight and balance documents. The manual material must specify who is responsible for preparing the trip records, the coordination activities that must be accomplished during the trip record preparation process, and the intermediate and final disposition of the trip records. The POI must ensure that the policies, procedures, and guidance in this manual material consistently contain accurate information for crewmembers and flight operational control personnel.

(10) Local Conditions at Line Stations. Personnel at line stations have immediate access to and knowledge of various conditions and activities that could affect flight operations at those line stations. Examples of local conditions and activities include the following: weather conditions, runway and taxiway conditions, airport construction activities, and new obstacles observed in the airport takeoff flight paths. As such, inspectors must ensure that an operator's GOM contains instructions and procedures so that line station personnel can provide the operator with local condition reports. This manual material must contain clear instructions about the circumstances in which line station personnel are authorized to suspend or delay flight operations.

2149. PASSENGER BRIEFING PROCEDURES. POI's must ensure that the operator's GOM or flight manual, as appropriate, specifies the procedures to be used for pre-takeoff, en route, and post-landing briefings of passengers. Operators who use F/A's may pub-

lish F/A user manuals as sections in their GOM's. The GOM or F/A user manual must contain the briefings to be given. Passenger briefing cards must be used to supplement the oral briefings. These passenger briefing cards must depict all of the required items that are addressed during the oral briefings. AC 121-24, "Passenger Safety Information Briefing and Briefing Cards," contains guidance on passenger safety information and briefing cards.

2151. EXIT SEATING PROGRAM. FAR §§ 121.585 and 135.129, "Exit Seating," regulate exit seating in aircraft operated by U.S. air carrier and commercial operators, except for on-demand operations with aircraft having 19 or fewer passenger seats and commuter operations with aircraft having 9 or fewer passenger seats. These regulations prescribe requirements relating to the seating of airline passengers near emergency exits. POI's must ensure that FAR Parts 121 and 135 operators' manuals, as appropriate, contain the applicable portions of the operators' approved exit seating program. Figure 3.15.3.1. provides POI's with a job aid containing guidance for determining operator compliance with FAR §§ 121.585 and 135.129.

2153. USE OF PORTABLE ELECTRONIC DEVICES. POI's and principal avionics inspectors (PAI) shall review the provisions contained in FAR § 91.21 and AC 91.21-1, "Use of Portable Electronic Devices Aboard Aircraft," with their assigned operators. POI's and PAI's shall ensure that their operators have adequate procedures in place to determine whether or not portable electronic devices are acceptable for passenger use on board their aircraft. POI's shall ensure that their operators specify in their operations manuals those portable electronic devices that may not be operated on board their aircraft. Although FAR §§ 121.571, 125.327, and 135.117 do not require the following briefing information to be given, POI's should encourage their assigned operators to include information regarding the operation of portable electronic devices in their operators' pretakeoff passenger safety briefings. These briefings should include any specific restrictions that apply to passenger use of portable electronic devices. An example briefing might be the following: "Some portable electronic devices may interfere with the aircraft's communications and navigation systems. Please refrain from using any electronic device other than portable voice recorders, hearing aids, and *[the operator should add to this list of portable electronic devices, the generic identification of any device that it determines will not cause interference]*. For your safety and the safety of others, please stow all carry-on portable electronic devices during taxi, takeoff, and landing."

2154.–2160. RESERVED.

FIGURE 3.15.3.1.
EXIT SEATING PROGRAM JOB AID

This preapplication phase job aid provides guidance for determining operator compliance with FAR §§ 121.585 and 135.129, Exit Seating. The POI should complete the initial review of the program and coordinate with the regional office focal point for initial approval of the program. The region will retain a copy of the program and will advise AFS-500 of those air operators that have approved exit seating programs.

Certificate Holder Name:

Doing Business As (DBA):

Address:

Certificate Holder Certificate No:

POI Name:

Office & Phone No:

Review Completed
Signature & Date:

Regional Office Focal Point:

Office & Phone No:

Review Completed
Signature & Date:

Date Program Approved:

Date AFS-500 Notified:

Comments:

REQUIRED ATTACHMENTS: Detailed on attached pages - Complete the lines with Y (for Yes) or N (for No):

Exit Seating Procedures

Airport Information

Passenger Information Cards

Aircraft Floor Plans

EXIT SEATING PROCEDURES. Procedures should be submitted as manual sections/training program sections/bulletins, etc. as appropriate to the individual carrier. Attach all applicable sections pertinent to exit seating only.

NOTE: The POI should check for applicability and manual format and ensure that all applicable publications are revised. THE PROCEDURES MUST ADDRESS THE FOLLOWING REGULATORY REQUIREMENTS, AND MUST ADDRESS WHEN, HOW, AND BY WHOM THE ITEMS WILL BE ADDRESSED.

FIGURE 3.15.3.1.—Continued
EXIT SEATING PROGRAM JOB AID

Selection Criteria: Reference FAR §§ 121.585(b) and 135.129(b).	
Do carrier procedures address when, how, and by whom the screening and/or selection will be accomplished?	
Do carrier procedures address the following selection criteria?	
1. Does a person lack sufficient strength, dexterity or mobility in both arms and hands, and both legs to perform the following functions?	
a. Reach upward, sideways, and downward to the location of emergency exit and exit slide operating mechanisms.	
b. Grasp and push, pull, turn, or otherwise manipulate those mechanisms.	
c. Push, shove, pull, or otherwise open emergency exits.	
d. Lift out, hold, deposit on nearby seats, or maneuver over the seat backs to the next row objects the size and weight of overwing exit doors.	
e. Remove obstructions similar in size and weight of overwing exit doors.	
f. Reach the emergency exit expeditiously.	
g. Maintain balance while removing obstructions.	
h. Exit expeditiously.	
i. Stabilize an escape slide after deployment.	
j. Assist others in getting off an escape slide.	
2. Is the person less than 15 years of age or does the person lack the capacity to perform one or more of the functions listed in FAR §§ 121.585(d) or 135.129(d) without the assistance of an adult companion, parent or other relative?	
3. Does the person lack the ability to read and understand instructions related to emergency evacuation provided by the certificate holder in printed or graphic form or the ability to understand oral crew commands in the language used by the carrier?	
4. Does the person lack a sufficient visual capacity to perform one or more of the functions listed in FAR §§ 121.585(d) or 135.129(d) without the assistance of visual aids beyond contact lenses or eyeglasses?	
5. Does the person lack a sufficient aural capacity to hear and understand instructions shouted by crewmembers without the assistance beyond a hearing aid?	
6. Does the person lack the ability to adequately impart information orally to other passengers?	
7. Does the person have either of the following?	
a. A condition or responsibility, such as caring for small children, that would prevent the person from performing one or more of the functions listed in FAR §§ 121.585(d) or 135.129(d).	
b. A condition that might cause the person harm if he or she performs one or more of the listed functions.	
Seating Assignments/Verification Procedures	
Are exit seats identified for seat assignment purposes?	
Reference FAR §§ 121.585(g) and 135.129(g). Does the certificate holder have a procedure that taxi or pushback will not be allowed until at least one required crewmember has verified that no exit seat is occupied by a person the crewmember determines is likely to be unable to perform the functions listed in FAR §§ 121.585(d) and 135.129(d)?	
Are verifying crewmembers specifically identified?	
Reference FAR §§ 121.585(j)(k) and 135.129(j)(k). Does the certificate holder have procedures to honor a passenger's request to be relocated and the procedures for relocation?	

FIGURE 3.15.3.1.—Continued
EXIT SEATING PROGRAM JOB AID

Does procedure reference that a person does not need to disclose his or her reason for the request?	
Reference FAR §§ 121.585(l) and 135.129(l). Does the certificate holder have procedures to move a passenger to accommodate a relocated passenger, in the event of full booking of non-exit seats?	
Denial of Transportation/Resolving Disputes	
Reference FAR §§ 121.585(m) and 135.129(m). Does the certificate holder have procedures to deny transportation because of either or both of the following?	
1. The passenger refuses to comply with instructions.	
2. The only seat that will physically accommodate the person's handicap is an exit seat.	
Reference FAR §§ 121.585(n) and 135.129(n). Does the certificate holder have procedures for resolving disputes, including identification of the employee at the airport to whom complaints should be addressed for resolution?	
Oral Briefing Procedures	
Reference FAR §§ 121.585(i) and 135.129(i). Does the oral briefing reference the following?	
1. Passenger information cards.	
2. The selection criteria in FAR §§ 121.585(b) or 135.129(b).	
3. The functions to be performed under FAR §§ 121.585(d) or 135.129(d).	
4. A request for reseating if any of the following conditions are met:	
a. Cannot meet the selection criteria.	
b. Has a nondiscernible condition that would prevent him or her from performing the listed functions.	
c. May suffer bodily harm as the result of performing one or more of those functions.	
d. Does not wish to perform those functions.	
AIRPORT INFORMATION	
Reference FAR §§ 121.585(f) and 135.129(f). Does the certificate holder have written procedures for making determinations in regard to exit seating available for inspection by the public at all passenger loading gates and ticket counters at each airport where it conducts passenger operations?	
Is a copy of the information attached?	
Is the content complete and the method of inspection identified, such as flyers, signs, and so forth?	
PASSENGER INFORMATION CARDS	
Are copies of applicable cards attached?	
Are cards appropriate to carrier's aircraft and configurations?	
Do procedures address the use and location of cards?	
Reference §§ 121.585(d) and 135.129(d). Do the briefing cards contain the following functions?	
1. Locate the emergency exit.	
2. Recognize the emergency exit opening mechanism.	
3. Comprehend the instructions for opening the emergency exit.	
4. Operate the emergency exit.	
5. Assess whether opening the emergency exit will increase the hazards to passengers being exposed.	
6. Follow oral directions and hand signals given by a crewmember.	

FIGURE 3.15.3.1.—Continued
EXIT SEATING PROGRAM JOB AID

7. Stow or secure the emergency exit door so that it will not impede use of the exit.	
8. Assess the condition of the escape slide, activate the slide, and stabilize the slide after deployment to assist others in getting off the slide (where applicable to aircraft type).	
9. Explain how to pass expeditiously through the emergency exit.	
10. Explain how to assess, select, and follow a safe path away from the emergency exit.	
Does the briefing card contain the selection criteria listed in FAR §§ 121.585(b) or 135.129(b)?	
Does the briefing card contain a request that a passenger identify himself or herself to allow reseating if he or she meets one of the following criteria?	
1. Cannot meet the selection criteria.	
2. Has a nondiscernible condition that will prevent him or her from performing the applicable functions listed above.	
3. May suffer bodily harm as the result of performing one or more of those functions.	
4. Does not wish to perform those functions.	
5. Lacks the ability to read, speak, or understand the language, or the graphic form specified by the carrier, or lacks the ability to understand oral crew commands (in every language used by the certificate holder for the card).	
AIRCRAFT FLOOR PLANS	
Are the aircraft passenger seating floor plans submitted for each aircraft make, model, and series, and for each passenger seating configuration used by the certificate holder?	
Are exits and exit seats identified?	
List aircraft operated: Aircraft Make/Model/Series — Configurations (same or show each configuration)	

[PAGES 3-2093 THROUGH 3-2094 RESERVED]

CHAPTER 15. MANUALS, PROCEDURES, AND CHECKLISTS

SECTION 5. AIRCRAFT CHECKLISTS

2197. GENERAL. This section contains direction and guidance for principal operations inspectors (POI) for the review of aircraft checklists for Federal Aviation Regulations (FAR) Parts 121 and 135 operators. All FAR Parts 121 and 135 operators must provide aircraft checklists to their flight crewmembers. Flight crewmembers are required to use these aircraft checklists in air transportation operations. For FAR Part 121 operators, aircraft checklists must be approved by the Federal Aviation Administration (FAA), and for FAR Part 135 operators these checklists must be acceptable to the FAA (see section 1 of this chapter for definitions of acceptance and approval).

A. Definition. A checklist is a formal list used to identify, schedule, compare, or verify a group of elements or actions. A checklist is used as a visual or oral aid that enables the user to overcome the limitations of short-term human memory. Although a checklist may be published in a manual, it is designed for independent use so that the user does not have to reference a manual. Checklists are used to ensure that a particular series of specified actions or procedures are accomplished in correct sequence. Aircraft checklists, in particular, are used to verify that the correct aircraft configuration has been established in specified phases of flight.

B. Standardization. Aircraft checklists and the operator's policies for the use of checklists are one means by which operators structure and define flight crewmember roles. Research has shown that standardized procedures and effective cockpit communications are significant factors in flight safety. POI's must review the operator's policies and procedures for checklist use as an integral part of the checklist review process. POI's shall ensure that checklists and the operator's procedures for checklist use are standardized (to the extent allowed by individual aircraft differences) for all aircraft in the operator's fleet.

C. FAA Approval or Acceptance for Specific Operators. POI's and operators must understand that aircraft checklists published in airplane flight manuals (AFM) or rotorcraft flight manuals (RFM) are not approved by the Aircraft Certification Office (ACO). When a FAR Part 121 operator proposes to use an AFM checklist, the POI must review and approve that checklist for that operator. When a FAR Part 135 operator proposes to use an AFM or RFM checklist, the POI must review the checklist and determine that it is acceptable for that operator's use.

2199. CHECKLIST CONTENT. Aircraft checklists have traditionally been divided into three categories. For the purpose of this handbook, these categories are referred to as normal, nonnormal, and emergency. Operators may use other titles for these categories, such as abnormal instead of nonnormal. Operators may also further divide these categories into subcategories, such as alternate and supplemental. POI's shall use the following guidance when evaluating the content of an operator's checklists.

A. Content. POI's shall ensure that aircraft checklists are limited to action items or verification items. The aircraft checklist should not contain elaboration or explanation. POI's must ensure that the required actions and decisions for flightcrews when performing a checklist are thoroughly described in the operator's manual and training program. POI's should consider the following when evaluating aircraft checklist content:

(1) Nonnormal and emergency checklists must contain each sequential step of a procedure.

(2) A normal checklist is typically a listing of action items to be performed and verified at a particular point in flight. Normal checklist items do not necessarily represent a procedural step and may even represent completion of an entire procedure. For example, the item "Gear - Up and Locked" could indicate that the gear handle had been raised, the gear indications checked, the gear handle had been placed in the neutral position to check the up-locks, and that the handle had then been returned to the up position. Most normal procedures do not require itemization or incorporation into a checklist. For example, the procedures for making normal takeoffs and landings are not itemized in a checklist format but described in a narrative format.

B. Criticality of Checklist Items. Checklist items can be ranked in criticality according to the potential effect of the crewmember failing to perform the action. Critical items are those items which, if not correctly performed, have a direct, adverse effect on safety. Noncritical items are "housekeeping" items or systems management items, which for operating practices must be routinely accomplished during a specific phase of flight, but if omitted would have a minimal effect on safety. An item may be considered to be critical on one checklist but noncritical on another checklist. For example, a flightcrew's failure to set the flaps while accomplishing the before-takeoff checklist has had extremely adverse consequences. A flightcrew's failure to retract the flaps while performing the after-landing checklist, however, has had little effect on safety. The operator and POI shall analyze each phase of flight to identify critical items for that phase of flight and to ensure that all critical items are included on the checklist.

C. Diversion of the Flightcrew's Attention. The flightcrew's attention is diverted from other tasks when performing a checklist. Checklists must be kept as short as practical to minimize "heads-down" time and diversion of the crew's attention while performing the checklist.

(1) Each additional item that is added to a checklist increases the potential for interruption when the checklist is accomplished, diversion of the crew's attention at a critical point, and the missing of critical items. Operators and POI's must weigh the benefit of including each item on a checklist against the possible adverse effects.

(2) Items not associated with aircraft operations (such as calls to the company) shall not be placed on the checklist.

D. Aircraft Sophistication and Checklist Design. The degree of technological sophistication in the design of the aircraft directly affects checklist items. In older aircraft, the flightcrew must manually select and monitor most items. In technologically advanced aircraft, the same items are accomplished and monitored by automatic systems that relieve the flightcrew of these tasks. Checklists for technologically advanced aircraft tend to be shorter and simpler than those for older aircraft. POI's shall ensure that the operator's aircraft checklists are based on a careful task analysis of the operational requirements of the specific aircraft.

E. Fleet Standardization. POI's shall ensure that operators standardize checklist items and the sequence of items to the extent allowed by individual aircraft differences across all aircraft in the fleet. Checklists for technologically sophisticated aircraft are typically shorter and simpler than those for older aircraft. The items on checklists for technologically advanced aircraft, however, are normally present on checklists for aircraft with older technology. POI's shall require operators to evaluate the feasibility of placing common checklist items on checklists with standard titles for all aircraft (such as before-start, before-takeoff, or before-landing checklists). Items should appear in a standard sequence to the degree possible. POI's should not normally approve placing an item on a checklist that is not required for that specific aircraft solely because the item is required in other aircraft of the fleet. POI's may make exceptions, however, when the operator provides adequate justification.

2201. METHODS OF CHECKLIST DESIGN. Operators may choose from at least two accepted methods of checklist design: the "challenge-do-verify" (CDV) method and the "do-verify" (DV) method. Available evidence suggests that safety is enhanced when the operator adopts and applies a consistent checklist design policy. POI's should use the following informative guidance when reviewing the design of an operator's aircraft checklists.

A. "Challenge-Do-Verify." The CDV method consists of a crewmember making a challenge before an action is initiated, taking the action, and then verifying that the action item has been accomplished. The CDV method is most effective when one crewmember issues the challenge and the second crewmember takes the action and responds to the first crewmember, verifying that the action was taken. This method requires that the checklist be accomplished methodically, one item at a time, in an unvarying sequence. The primary advantage of the CDV method is the deliberate and systematic manner in which each action item must be accomplished. The CDV method keeps all crewmembers involved (in the loop), provides for concurrence from a second crewmember before an action is taken, and provides positive confirmation that the action was accomplished. The disadvantages of the CDV method are that it is rigid and inflexible and that crewmembers cannot accomplish different tasks at the same time.

B. "Do Verify." The DV method (or "clean-up" method) consists of the checklist being accomplished in a variable sequence without a preliminary challenge. After all of the action items on the checklist have been completed, the checklist is then read again while each item is verified. The DV method allows the flightcrew to use flow patterns from memory to accomplish a series of actions quickly and efficiently. Each individual crewmember can work independently, which helps balance the workload between crewmembers. The DV method has a higher inherent risk

of an item on the checklist being missed than does the CDV method.

C. Selection of Design Method. Both the CDV and the DV methods of checklist design are currently being successfully used for normal checklists. Traditionally, operators have preferred the DV method for normal checklists and the CDV method for nonnormal and emergency checklists. Operators have, however, successfully used the CDV method for all checklists. POI's may approve either method for normal checklists. In most circumstances nonnormal and emergency checklists are more effective when the CDV method is used. The correct accomplishment of the actions and procedures incorporated in the nonnormal and emergency checklist categories is critical and warrants a methodical approach. Since these checklists are seldom used, however, crewmembers are usually not as familiar with the procedures incorporated into these checklists as they are with the procedures in normal checklists. In addition, many nonnormal and emergency checklists do not lend themselves to developing flow patterns that crewmembers can readily recall. The CDV method also enforces crew coordination, cross-checking, and verification, all of which aid the crewmember in overcoming the adverse effects of stress. POI's should not approve or accept the DV method for nonnormal or emergency procedures unless the operator can provide substantial evidence that the method is effective for this application.

D. Mechanical or Electronic Checklists. Mechanical or electronic devices differ in format from paper, hand-held checklists, but not in the design method or use. The actions these checklists contain and their sequencing shall be consistent with the paper version (when required) available to the flightcrew. Some electronic checklists will have an ability to automatically detect the completion of an action based on switch position, system state, or both. In electronic checklists, the verification in the CDV or DV methods may be a matter of observing that the items are complete via the display method used (for example, completed items turn green). The CDV or DV methods can be applied to any type of checklist. POI's should encourage the use of such aids when operators find them effective.

E. Verification. POI's should keep in mind that all checklist designs are subject to human error. Crewmembers may omit and skip checklist items. Crewmembers may erroneously respond to a checklist at times believing that an item or task was accomplished when it was not. At times, crewmembers may see what they expect to see rather than what has actually been accomplished. Both the CDV and the DV methods are subject to such human errors. POI's must ensure that operators have developed policies for using checklists that require stringent cross-checking and verification to overcome these human limitations. These policies must be compatible with the operator's crew resource management (CRM) philosophy. POI's shall review the operator's policies as an integral part of the review process.

2203. POLICIES FOR MANAGING THE ACCOMPLISHMENT OF CHECKLISTS. POI's must ensure that the appropriate sections of the operator's manuals contain the specific crewmember responsibilities for monitoring, verifying, and managing the accomplishment of checklists. These responsibilities should appear either as policy statements or as specific directives. POI's should use the guidance that follows when evaluating an operator's policies for the accomplishment of checklists.

A. Objective of Policy Statements and Directives. The primary objective of the operator's policy statements or directives is to standardize crewmember interaction. These statements should include, but not be limited to, the following items:

- Flightcrew responsibilities for maintaining aircraft control, analyzing situations, and for requesting the appropriate checklist in nonnormal and emergency situations
- The specified crewmember responsible for initiating each checklist
- The specified time when each checklist is to be initiated
- The specified crewmember responsible for accomplishing each item on the checklist
- The specified crewmember responsible for ensuring that each checklist is completed and for reporting that completion to the crew
- Crewmember responsibilities for bringing to the attention of the pilot-in-command (PIC) and the rest of the crew any observed deviation from prescribed procedures

B. Methods for Managing Checklist Accomplishment. The following subparagraphs each contain a discussion of recommended methods an operator may use for managing checklist accomplishment. These methods are not all-inclusive and may not meet all of the operator's needs. POI's shall not interpret these methods as the only ones that are acceptable.

(1) For single-pilot aircraft, the FAA recommends that operators mount the before-takeoff checklist and the before-landing checklist on the instrument panel by means of a placard. When aircraft

characteristics allow, the operator should develop touch-verification procedures that contain a requirement that the pilot touch each control to verify it is in the correct position.

(2) For two-pilot aircraft in which only the PIC has ground steering control, the recommended method for accomplishing checklists is for the second-in-command (SIC) to read all checklists when the aircraft is in motion on the ground. The recommended method for those aircraft in which either pilot can steer on the ground is for the pilot-not-flying (PNF) to read all checklists. In all two-pilot aircraft, the PNF should read all checklists when the aircraft is airborne.

(3) For three-crewmember aircraft, the recommended method is for the SIC to read the flight engineer (FE) portion of the before-engine-start checklist, so that the PIC can observe and verify the configuration of the FE panel as the FE responds to each item on the checklist. Since the PNF is the crewmember most subject to interruptions from radio communications, it is recommended that the FE should read all normal checklists and verify that each pilot action has been taken when the aircraft is in motion. The FE should have the explicit task of verifying that critical items have been performed by the pilots, whether or not the FE has verbal responses for those items. In those nonnormal or emergency situations that involve significant activity by the FE, it is recommended that the PNF read the checklist and verify FE actions while the FE performs and responds to the items.

(4) For all aircraft, the crewmember responsible for reading the checklist should be responsible for ensuring that the checklist is completed systematically and expeditiously. This crewmember should be responsible for managing interruptions, cross-checking controls and indicators to ensure that the required actions have been accomplished, and for reporting that the checklist has been completed.

(5) The pilot-flying (PF) should not be distracted from controlling the aircraft to perform a checklist item that another crewmember can accomplish. The PF should activate only those switches or controls (other than the manual or automatic flight controls, throttles, and nosewheel steering) that are not within practical reach of another crewmember. Only one pilot should be "heads down" at any time.

(6) In the prestart phase, flight guidance and navigation checklist items have proven to be critical items. A response should be required from both pilots (and FE, if applicable) when the same setting is required for more than one device (such as computers, flight instruments, and altimeters). Inertial platform alignment and computer programming should be accomplished by one crewmember and independently confirmed by another crewmember. As many of these checklist items as possible should be accomplished and verified before the aircraft is moved.

(7) In the taxi and pretakeoff phases, aircraft configuration (such as flaps, trim, and speedbrakes) and flight guidance items (such as heading, flight-director, altitude select panel settings, and airspeed bugs) have proven to be critical. All flight crewmembers should confirm these items, and at least two crewmembers should respond to applicable checklist items.

(8) On approach, flight guidance checklist items have proven to be critical items. At least two crewmembers should confirm and respond to these items. A response should be required from each pilot when the same setting is required on two separate devices (such as computers, flight instruments, or altimeters).

NOTE: One operator was able to reduce altitude deviations from an average of two per week to one per quarter by using stringent procedures for setting and verifying the altitude alerter.

(9) All checklist items that are critical in the before-landing phase vary with the type of airplane involved. In the operation of small airplanes, the landing gear has proven to be a critical checklist item, and both pilots should confirm and respond to this item. Although the landing gear and flaps are critical items for large, transport category airplanes, the multiple warning devices and systems that are associated with these systems make the need for a response and confirmation by both pilots less critical.

(10) All checklists, except the after-takeoff and after-landing checklists, should be accomplished by one crewmember reading the checklist items and a second crewmember confirming and responding to each item. POI's shall ensure that critical items on the before-takeoff and before-landing checklists are confirmed and responded to by at least two crewmembers.

(11) All checklists must be designed so that the flightcrew can maintain an adequate visual scan and monitor air traffic control (ATC) communications while simultaneously controlling the aircraft. The recommended method is for the operator to group the systems management checklist items after the configuration, thrust, and flight guidance items for each phase of flight. When systems management checklist items must be accomplished in a high workload environment, it is recommended that they be accomplished

by a single crewmember. Usually the after-takeoff and after-landing checklists items can be accomplished silently as these items have not proven to be critical. POI's should carefully evaluate the operator's overall operation and experience before approving other checklists in which a single crewmember may accomplish a checklist.

(12) Operators should direct crewmembers to refrain from accomplishing action items assigned to other crewmembers. Crewmembers should be directed that when they observe that another crewmember is not taking or has not taken a required action they must inform the crewmember, the PIC, or the whole crew, as appropriate.

(13) Checklists should not be depended on to initiate changes in aircraft configuration. Operators should key aircraft configuration changes to specific operational events. For example, the operator may direct the landing gear to be extended at glideslope intercept. For any adjustment of thrust, or configuration, a command from the PF and an acknowledgement from the crewmember taking the action is required.

(14) Flight crewmembers frequently cannot complete a checklist when initiated either because of an interruption or because an item on the checklist has not yet been accomplished. POI's shall ensure that each operator has developed policies for the management of these situations. For short delays, the recommended policy is for the flightcrew to hold the checklist until the interruption is over and the item can be completed. When the checklist item is completed, the challenge should be repeated, the proper response given, and the checklist continued. POI's shall not accept policies that allow flightcrews to skip checklist items that have not been completed and then to depend on memory to accomplish the item later. When a mechanical or electronic device allows checklist items to be accomplished in a random sequence, the POI may allow policies appropriate to the system used.

(15) WITHDRAWN—CHG 10.

C. Checklist Interruptions. Operators must establish procedures to ensure that the correct checklist sequence is reestablished when unusual events interrupt the normal sequence of a flight. For example, crewmember actions during normal sequences of flights are interrupted when long delays are encountered on taxi-out or when crewmembers vacate the flight deck.

(1) Vacating Flight Deck with Visitors in Cockpit. Operators must establish additional checklist management procedures for checklist interruptions that occur when any flight crewmember who is assigned to a flight deck duty station vacates the cockpit to perform other duties, leaving persons who are occupying cockpit observer seats or who visit the cockpit during such absence with unsupervised access to unmanned flight deck duty stations. If any checklist interruption of this kind occurs and any person, other than those specified in FAR §§ 121.547(a), 121.583(a)(1) through (3) or 135.85(a) and (f), has unsupervised access to an unmanned flight deck duty station, then each checklist item in all of the checklists prior to engine start must be reaccomplished.

(2) POI Responsibilities. FAR Part 121 POI's shall ensure that their assigned certificate holders conform to the policies described in this subparagraph. FAR Part 135 POI's shall encourage their assigned certificate holders to conform to these policies.

NOTE: The following policies apply when interruptions of checklists occur before engine start; are caused by the vacating of an assigned flight deck duty station by one or more flight crewmembers to perform duties outside the flight deck; and any person, other than those specified in FAR §§ 121.547(a), 121.583(a)(1) through (3) or 135.85(a) and (f), occupies a cockpit observer seat or has access to the cockpit during the flight crewmember's absence.

(3) Verification of Items Accomplished. The flightcrew must verify the accomplishment of all items on checklists that have been accomplished up to the point where the current checklist was interrupted.

(a) Minimum Requirement. As each checklist item is reaccomplished, the minimum that is required is a verification that switches, control handles, knobs, or levers are in the positions prescribed and that the associated indicator lights and instrument readings confirm the proper positioning of the applicable switches, control handles, knobs, or levers.

(b) Additional Requirements.

1. If the verification check reveals that any switch, control handle, knob, or lever is not in the position prescribed, then the full procedure, including any associated checks for the particular checklist item(s), must be reaccomplished.

2. If the indicator lights or instrument readings associated with the proper positioning of particular switches, control handles, knobs, or levers are not in agreement with the prescribed positions of these control means and reaccomplishment of the full procedure, including any associated checks for the particular checklist item(s), does not correct the disagreement, then the flightcrew must log the discrepancy in the aircraft maintenance log. The operator

must either correct this discrepancy before the next flight or, if permitted, defer correction in accordance with the certificate holder's approved minimum equipment list (MEL) procedures.

2205. DEVELOPMENT AND SEQUENCING OF CHECKLIST ITEMS. POI's must ensure that checklists are developed from a careful task analysis and are consistent with the procedures section of the operator's flight manual. Phase checklist items must be in an appropriate and logical sequence. When a checklist represents an abbreviated procedure, that checklist must follow the procedural sequence. POI's should use the following additional guidelines concerning individual topics of checklist design.

A. Operators should standardize the sequence of checklist items as much as possible across aircraft types (see subparagraphs 2199D and E).

B. When the operator has a choice as to where an item should be placed on a checklist, it should be placed at a point where the crew workload is lowest.

C. Operators should keep checklists as short as possible in order to minimize interruptions. When an operator is using an electronic checklist with the ability to automatically detect the completion of an action, the POI shall encourage the use of that ability to the maximum extent possible.

(1) Operators should sequence checklist items to minimize interruptions of checklist accomplishment. For example, sequencing the "INS NAV MODE" as the first item on the engine-start checklist may allow the flightcrew to call for and complete the before-engine-start checklist at a convenient time even though INS alignment is not complete.

(2) Two short checklists may be preferable to a single long one. Operators may place a line or otherwise mark a checklist where the checklist can be held until a specific event occurs. This practice is acceptable because in essence, it creates two separate checklists.

D. Operators must include required preflight tests on checklists, but should design checklists to preclude the unnecessary testing of systems.

(1) Warning systems with built-in test and automatic monitor circuits do not need to be checked or included on checklists unless required by the AFM.

(2) Many test switches in the cockpit are designed for use by maintenance personnel. Operators should not require flight crewmembers to perform these tests as a normal procedure.

(3) With concurrence of the aircraft evaluation group (AEG), POI's may approve the operator grouping required functional checks on a specific checklist which is performed before the first flight of the day (or at some other logical interval) and not repeated on subsequent flights.

E. Operators must clearly identify decision points and indicate the correct alternative action or alternative sequence of actions to be taken after each decision point. If the effect of adverse weather requires an alternate action, the operator should design the checklist to account for that alternate action. For example, if the autothrottles are normally engaged for takeoff except when engine anti-ice is being used, the checklist should contain a requirement that the autothrottles cannot be engaged with the engine anti-ice on.

2207. IMMEDIATE ACTION ITEMS. Immediate action items are those items accomplished from memory by crewmembers in emergency situations before the checklist is called for and read.

A. A flightcrew's failure to correctly accomplish all immediate action items can result in a threat to continued safe flight. For example, should a flightcrew fail to close the tank valve during an engine fire procedure, leaking fuel in the engine pylon may be ignited. In such cases, the first items on the corresponding checklist must be a verification that each immediate action item has been accomplished.

B. In some cases, an immediate action procedure may not be incorporated in a checklist. For example, there is no point in verifying that each item of an aborted takeoff procedure has been accomplished after the aircraft has been brought to a stop. In most cases, however, there should be a "follow-on" or "clean-up" checklist to be accomplished after the situation has been brought under control.

C. Immediate actions may be stated as policies rather than as checklist items when appropriate. An example of an immediate action item that can be stated as a policy rather than as a checklist item is the following statement: "All flight crewmembers shall immediately don O_2 masks and report to the captain on interphone in the event of loss of cabin pressure." In this example, the loss-of-cabin-pressure checklist would contain subsequent items based on the assumption that the flightcrew is on oxygen and has established interphone contact.

2209. CHECKLIST TERMINOLOGY. POI's should ensure that the operator's aircraft checklists contain terminology that is tightly controlled to ensure clarity and common understanding. The following rec-

ommendations should be considered by POI's when reviewing checklists.

A. The challenges and responses on the checklist should be consistent with the labeling on the switches and controls in the cockpit.

B. Terms such as "tested," "checked," and "set" are acceptable terms only when they are clearly defined and consistently used.

C. Operators should have a consistent policy concerning responses to items with variable settings. "As required" may be printed on the checklist, but should not be an authorized response. A response that gives the actual setting is normally appropriate. Items that require variable responses should be carefully evaluated. Such items may not actually be required on the checklist or may be more appropriately included in the system management portion of a checklist.

D. Responses to checklist items concerning liquid or gas quantities should be made in terms of the actual quantities on board compared to the specific quantity required, for example: "10,000 pounds required, 10,400 on board." When specific quantities are required, a response of "checked" is not acceptable. A response of "checked" is acceptable when a range of quantity is permitted and the range is marked on an indicator, such as a green arc on an oil quantity gauge.

E. Excess verbiage on checklists should be discouraged. For example, a checklist item of "Reduce airspeed to 130 KIAS for best glide" can be abbreviated as "BEST GLIDE - 130 KIAS."

F. Ambiguous verbiage on checklists is not acceptable. For example, "takeoff power" can mean either to advance the power or to retard the power.

2211. AIRCRAFT DIFFERENCES. POI's shall ensure that operators account in the aircraft checklists for differences in various series of aircraft or in installed equipment. When there are only a few minor differences, this may be accomplished by using symbols to designate those checklist items that apply to only one series of airplanes or that apply only when the equipment is installed. When there are a significant number of differences, operators should prepare separate checklists for each series of aircraft. Policies and procedures should be established to account for differences in checklist responses when operations are conducted with equipment removed or inoperative, in accordance with MEL's and configuration deviation lists (CDL).

2213. SEQUENCING NORMAL CHECKLISTS AND OTHER CHECKLISTS. Normal checklist items may be incorporated in nonnormal or emergency checklists to simplify cockpit management. An acceptable alternative method is to require both the normal and nonnormal or emergency checklists to be accomplished in a specified sequence. This method has the advantage of allowing the normal checklist to be requested and accomplished at the time that it would normally be accomplished. Checklists should be designed so that two checklists are not in progress simultaneously. The method may depend on the degree of sophistication of the airplane involved. In technologically advanced aircraft with short, simple checklists, it is usually preferable to keep the normal and the nonnormal checklists separate. Some nonnormal checklist actions may be deferred until initiation of the appropriate normal checklist. In airplanes with electronic checklists, checklists may be combined based on the priority of any one action, and/or the deferred nonnormal checklist items may be automatically inserted in the appropriate normal checklist. In older airplanes, however, it may be necessary to add the normal checklist items to the nonnormal or emergency checklist simply to keep the checklist manageable.

2215. CHECKLIST FORMAT. POI's shall ensure that operators present checklists to flightcrews in a practical and usable format. POI's should use the following guidance when evaluating aircraft checklists for proper format.

A. Paper checklists should be protected either by plastic lamination or by being printed on heavy, folded pasteboard stock.

B. Nonnormal, alternate, and emergency checklists must be in a format that allows crewmembers to quickly and accurately find the correct procedure while the crewmember is under stress. To expedite the referencing of these checklists, a tabbed manual or other quick reference format is recommended. When a paper checklist is required on the airplane, the methods used in an electronic checklist and the associated paper checklist for referencing a particular checklist shall be sufficiently similar to minimize flightcrew confusion or inappropriate flightcrew response. The methods for accessing electronic checklists may determine the format used to reference checklists in the paper version.

C. For single-pilot aircraft, the before-takeoff checklist and before-landing checklist can be appropriately presented as placards on the instrument panel.

D. The type size and contrast used on a checklist is a compromise. A large type size is preferred for legibility. A small type size is preferred to keep the number of checklist pages to a minimum, which then

further ease the locating of a specific checklist. The legibility of printed material depends on the size of the letters, the spacing between letters, and the type of font used. The following is offered as a suggestion to POI's for what to consider in evaluating the legibility of checklists. This guidance must not be interpreted as being the only acceptable print size and contrast that can be used for checklists:

- Checklist headings or titles—12 point type, all caps, boldface, and a plain (sans serif) font
- Checklist text (challenge and response) and notes—10 point type, boldface, and a plain (sans serif) font
- Contrast for headings or titles—either black print on white or reversed for emphasis
- Contrast for text—black print on white
- Colored borders for ease of identification—green for normal checklists, yellow for nonnormal checklists, and red for emergency checklists

NOTE: On airplanes with electronic checklists, these selections should be consistent with the display and symbology standards used by that system.

2216.–2226. RESERVED.

[PAGES 3-2117 THROUGH 3-2122 RESERVED]

VOLUME 4. TABLE OF CONTENTS

AIRCRAFT EQUIPMENT AND OPERATIONAL AUTHORIZATIONS

Page

CHAPTER 1. AIR NAVIGATION AND COMMUNICATIONS

Section 1. General Navigation Concepts, Policies, and Guidance

1. General 4-1
3. The Objective of Air Navigation 4-1
5. General Concepts 4-1
7. The Concept of an ATC Clearance 4-2
9. Concept of Navigation Performance 4-2
11. Concept of the Degree of Accuracy Required for Control of Air Traffic 4-5
13. Concept of Operational Service Volume 4-5
15. Categories of Navigational Operations 4-5
17. U.S. Public Law, International Agreements, and Standards Related to Air Navigation 4-9
19. Relationship Between the FAR, ICAO, SARP's, and National Regulations 4-10
21. Relationship of U.S. Operational FAR to Air Navigation 4-11
23. FAR Specifying Air Navigational Equipment Requirements 4-12
25. Protection of Persons and Property 4-16
26.-30. Reserved 4-16

Section 2. Air Navigation Approval Requirements

31. General 4-23
33. Inspector-Subject Familiarization and Approval Requirements 4-23
35. Determining the Class of Navigation 4-23
37. Special Operations 4-24
39. Airworthiness of Navigation Equipment 4-24
41. Training Programs and Manuals 4-25
43. Minimum Equipment Lists 4-25
45. Navigation Practices, Techniques, and Procedures 4-25
47. Validation Testing Requirements 4-25
49. Guidance for Use of Aircraft Equipment Suffix /G 4-26
50.-70. Reserved 4-26

Section 3. Class I Navigation

71. General 4-33
73. VFR Class I Navigation 4-33
75. Types of VFR Class I Navigation 4-34
77. VFR Class I Navigation Approvals 4-34
79. Part 135 Pilotage VFR Class I Navigation Standard Practices (TBD)* 4-35
81. Part 135 Station-Referenced VFR Class I Navigation Standard Practices (TBD) 4-35
83. Part 121 Station-Referenced VFR Class I Navigation Standard Practices (TBD) 4-35
85. IFR Class I Navigation 4-35
87. Types of IFR Class I Navigation 4-35
89. IFR Class I Navigation Approvals 4-36
91. Standard ICAO NAVAID IFR Class I Navigation Standard Practices (TBD) 4-37
93. Area Navigation Systems IFR Class I Navigation Standard Practices (TBD) 4-37
95. Part 135 Single Pilot IFR Class I Navigation Standard Practices (TBD) 4-37
97. Part 135 Helicopter IFR Class I Navigation Standard Practices (TBD) 4-37

**(TBD)=TO BE DEVELOPED*

VOLUME 4. TABLE OF CONTENTS—Continued

Page

98.-110. Reserved 4-37

Section 4. Class II Navigation

111. General 4-43
113. VFR Class II Navigation 4-43
115. Part 135 Airplane VFR Class II Navigation Standard Practices (TBD) 4-43
117. Helicopter VFR Class II Navigation Standard Practices (TBD) 4-43
119. IFR Class II Navigation 4-43
121. Types of IFR Class II Navigation 4-43
123. IFR Class II Navigation Approvals 4-46
125. Class II Navigation Using ICAO Standard NAVAID'S Supplemented by Dead Reckoning Standard Practices (TBD) 4-47
127. Pilot-Operated Electronic Long-Range Navigation Systems Standard Practices (TBD) 4-47
129. Flight Navigator Standard Practices (TBD) 4-47
131. Confirmation of System Accuracy and Reliability (TBD) 4-47
132.-140. Reserved 4-47

Section 5. Special Navigation Areas of Operation

141. General 4-54
143. Areas Requiring High Levels of Long-Range Navigation Performance 4-54
145. North Atlantic Minimum Navigation Performance Specifications Airspace (NAT/MNPS) 4-54
147. Canadian Minimum Navigation Performance Specifications Airspace 4-57
149. Operations in Airspace Where Composite Separation is Applied by ATC 4-57
151. Areas of Magnetic Unreliability 4-60
153. Areas With Significant Communications and/or Air Traffic Control Difficulties 4-63
155. Evaluation Criteria for Areas with Communications and ATC Difficulties 4-63
157. Operations in Sensitive International Areas 4-64
159. South Atlantic and Gulf of Mexico Control Areas (Atlantic and Gulf Routes) 4-64
161. Special Areas Where Redundant Long-Range Navigation Systems are Usually Not Required 4-65
163. Air Transportation Operations Within the Former Soviet Union 4-66
164.-174. Reserved 4-69

Section 6. General Communications Concepts, Policies, and Guidance

175. General 4-81
177. Very High Frequency (VHF)/High Frequency (HF) Communications (TBD) 4-81
179. Communications Equipment Requirements for Over-Water Operations 4-81
181. Data Link (TBD) 4-82
183. Automatic Dependent Surveillance (TBD) 4-82
185. Satellite Voice (TBD) 4-82
186.-400. Reserved 4-82

CHAPTER 2. ALL-WEATHER TERMINAL AREA OPERATIONS

Section 1. Introduction to and Evolution of All-Weather Terminal Area Operations

401. General Background 4-121
403. Evolution of AWTA Operations 4-121
405. Current Category I (CAT I) Operations 4-122
407. Evolution of Current Category II (CAT II) Operations 4-123
409. Evolution of Current Category III (CAT III) Operations 4-124
411. Future Reductions to Landing Minimums 4-125

VOLUME 4. TABLE OF CONTENTS—Continued

		Page
413.	Authority and Responsibility for Approval of AWTA Operations	4-125
414.-440.	Reserved	4-126
Section 2.	General Concepts for All-Weather Terminal Area Approach Procedures	
441.	General	4-134
443.	Basic Types of AWTA Approach and Landing Operations	4-134
445.	Categories of Instrument Approach Procedures	4-134
447.	Operating Minimums	4-135
449.	Controlling Minimum Concept	4-135
451.	Look-See Approaches	4-136
453.	Instrument Approach Procedures	4-136
455.	U.S. Standard Instrument Approach Procedures (SIAP)	4-137
457.	Other Instrument Approach Procedures (IAP)	4-137
459.	Special Approach and Landing Operations	4-138
460.-470.	Reserved	4-140
Section 3.	Factors Affecting All-Weather Terminal Area Operations	
471.	General Factors Affecting Operating Minimums	4-145
473.	Precision of Flightpath Control	4-145
475.	Obstacle Clearance	4-145
477.	Function of External Visual References	4-145
479.	Maximum Sink Rates	4-146
481.	Cockpit Design	4-146
483.	Minimum Instrument Flight Altitudes	4-147
485.	Minimum Visibility, Runway Visibility Values, and/or Runway Visual Range	4-148
487.	Safety During Go-Arounds	4-148
489.	Concept of Decision Height (DH)	4-149
491.	Concept of Minimum Descent Altitude and Missed Approach Point (MDA/MAP)	4-150
493.	Concept of Circling Maneuvers	4-151
495.	Concept of Runway Visual Range	4-151
497.	General Factors Affecting Seeing Conditions	4-152
499.	Weather Conditions/Fog Structure	4-152
501.	Visual Aids and Runway Environment	4-153
503.	Effects of Aircraft/Cockpit Design on Seeing Conditions	4-154
505.	Eye Reference Position	4-155
507.	Threshold Crossing Height (TCH) Concept	4-155
509.	Visual Illusions	4-156
511.	Stabilized Approach Concept	4-158
513.	Air Traffic Control Concepts	4-158
515.	Airport Facilities and Services	4-160
516.-530.	Reserved	4-161
Section 4.	Category I Operations	
531.	General	4-173
533.	Definition of CAT I Approach and Landing Operations	4-173
535.	Generic CAT I Operational Concepts	4-173
537.	Fundamental Operating Principles	4-174
539.	Cat I Operating Minimums for Public Instrument Approaches	4-174
541.	Basic Air Carrier Operating Minimums	4-175
543.	Standard Air Carrier Operating Minimums	4-176
545.	Authorized CAT I Instrument Approach Procedures	4-177
547.	Basic IFR and Standard CAT I Operating Practices	4-177
549.	The Standard AWTA Operating Procedure	4-180

VOLUME 4. TABLE OF CONTENTS—Continued

Page

551. Evaluation and Approval of CAT I Operations 4-181
553. CAT I Airport, Runway, and Ground-Based Equipment Requirements 4-183
555. CAT I Operations Using Basic Air Carrier Operating Minimums 4-184
557. CAT I Operations Using Standard Air Carrier Operating Minimums 4-187
559. Use of Standard Operating Minimums in Turbojet, Turbofan, and Propfan Airplanes . 4-188
561. Special CAT I Operations 4-190
563. Approval of CAT I All-Weather Operations 4-192
564.-580. Reserved 4-192

Section 5. Category II Operations

581. General 4-211
583. CAT II Operational Concepts 4-212
585. Standard CAT II Operations 4-213
587. Special CAT II Operations 4-215
589. CAT II Terminal Instrument Approach Procedures (U.S. Airports) 4-216
591. Foreign CAT II Instrument Approach Procedures 4-217
593. Foreign Flag CAT II Operations in the U.S. 4-217
595. CAT II Evaluation and Approval Process 4-218
596.-610. Reserved 4-219

Section 6. Category III Operations

611. General 4-241
613. CAT III Operational Concepts 4-242
615. Establishing CAT III Operating Minimums 4-243
617. Functional Requirements for Visual Reference 4-245
619. Decision Region 4-245
621. Radio Altimeter and Pre-Threshold Terrain 4-246
623. Types of ILS Systems 4-247
625. Approval of CAT III Operating Minimums 4-248
627. Standard CAT III Operations 4-250
629. Special CAT III Operations 4-252
631. CAT III Terminal Instrument Approach Procedures (U.S.) 4-252
633. Foreign CAT III Instrument Approach Procedures 4-252
635. Foreign Flag CAT III Operations in the U.S. 4-253
637. CAT III Evaluation and Approval Process 4-255
639. Operations Specifications for CAT III Operations 4-260
640.-644. Reserved 4-260

Section 7. Lower-Than-Standard Takeoff Minimums

645. General 4-281
647. Training 4-281
648.-658. Reserved 4-281

Section 8. MLS, GPS, and Loran-C Systems (TBD)

659.-670. Reserved 4-299

Section 9. Authorization for the Use of Special Terminal Instrument Procedures

671. General 4-321
673. Background 4-321
675. Authority and Responsibility for Special Terminal Instrument Procedures 4-321
677. Special Procedures 4-322
679. POI Authorization for Operator Use of a Special Terminal Instrument Procedure 4-322
681. Practices and Policies for IFR Departure Procedures 4-323

VOLUME 4. TABLE OF CONTENTS—Continued

		Page
683.	Flight Procedures Standards Waiver to Special Terminal Instrument Procedures	4-323
685.	Provisional Authorizations	4-323
687.	Special IFR Departure Procedures for Departure from Airports Without Instrument Approach Procedures (Part 135 Operators Only)	4-324
689.	NOTAM's	4-324
690.-900.	Reserved	4-324

CHAPTER 3. AIRPLANE PERFORMANCE AND AIRPORT DATA

Section 1. Airplane Performance Computation Rules

901.	General	4-331
903.	Overview of Airplane Performance Rules	4-331
905.	Large Airplane Certification	4-333
907.	Determining Applicable Operating Rules	4-333
909.	Small Airplane Certification	4-333
911.	V Speed Definitions	4-335
913.	Runway Length	4-336
915.	Runway Limit Weight—Transport and Commuter Categories	4-337
917.	Takeoff Conditions	4-337
919.	Wind Conditions During Takeoffs and Landings	4-338
921.	Water and Contamination of Runways	4-339
923.	Tire Speed and Brake Limits	4-339
925.	Takeoff Climb Limit Weight	4-339
927.	Takeoff Weights Limited by Obstacles	4-339
929.	En Route Performance Limits	4-340
931.	Approach and Landing Climb Limits	4-342
933.	Landing Distance	4-342
934.-946.	Reserved	4-343

Section 2. Airplane Performance Rules

947.	General	4-365
949.	Large, Reciprocating-Powered, Transport Category Airplane Performance	4-365
951.	Large, Turbine-Powered Transport Category Airplane Performance	4-369
953.	Performance Rules for Large Nontransport Airplanes	4-377
955.	Rules for Release of Commuter Category Airplanes	4-379
957.	Small Transport Category Airplanes Operated Under Part 135	4-381
959.	Small, Nontransport Category Airplanes with 10 to 19 Passenger Seats and Up to 12,500 MTOW	4-381
961.	Rules for Release of SFAR 41.1(b) Airplanes	4-383
963.	Rules for Release of Small, Normal Category Airplanes with Less than 10 Seats	4-383
964.-974.	Reserved	4-385

Section 3. Approval of Performance Data Sections of CFM's

975.	General	4-409
977.	Manual Computation System From AFM Data	4-410
979.	Tabulated Data Method	4-410
981.	Simplified Data Method	4-410
983.	Real Time Method	4-411
985.	Evaluation of an Operator's System	4-411
986.-996.	Reserved	4-412

Section 4. Airport Data Acquisition Systems

997.	General	4-435

VOLUME 4. TABLE OF CONTENTS—Continued

Page

999. Obstacle Data Sources 4-435
1001. Approval of Data Acquisition Systems 4-436
1002.-1012. Reserved 4-437

Section 5. Selected Practices

1013. General 4-459
1015. Non-Transport Category Airplane Operating Limitations 4-459
1017. Approval of Drift-Down and Fuel-Dumping Procedures 4-459
1019. En Route Operations with Landing Gear Extended 4-460
1021. High-Speed Taxi Starts with One Powerplant Inoperative 4-460
1023. Approval of Unpaved Runways for Turbojet Operations 4-460
1025. Air Carrier Winter Operations 4-460
1027. Deviation for Obstacle Clearance Data for Certain Turbojet Airplanes in Part 135 Operations 4-461
1028.-1064. Reserved 4-462

CHAPTER 4. MINIMUM EQUIPMENT LISTS (MEL) AND CONFIGURATION DEVIATION LISTS (CDL)

Section 1. General

1065. Background 4-561
1067. General 4-561
1069. Applicability 4-561
1071. POI's Responsibilities 4-561
1073. Definitions 4-561
1075. Purpose of MEL 4-562
1077. Items Listed on the MEL 4-562
1079. Timely Repair of Items that are Inoperative 4-563
1081. Recordkeeping 4-563
1083. Multiple Items that are Inoperative 4-563
1085. Fleet Approval 4-563
1087. MEL Revisions 4-563
1089. Access to MEL 4-563
1091. Conflict with Other FAA-Approved Documents 4-563
1092.-1104. Reserved 4-563

Section 2. Master Minimum Equipment Lists (MMEL) Development and Approval Process

1105. General .....
1107. Proposed Master Minimum Equipment List (PMMEL) 4-577
1109. Initial MMEL Approval Process 4-577
1111. MMEL Revision Procedures 4-577
1113. Lead Airline Concept 4-578
1114.-1122. Reserved 4-578

Section 3. MEL Approval Process

1123. General 4-589
1125. MEL Acceptability 4-589
1127. Initial Phase of MEL Approval 4-589
1129. Final Phase of MEL Approval Process 4-590
1131. Terms and Conditions of Relief 4-594
1133. Demonstration Phase 4-595
1135. POI Approval of the Operator's MEL 4-595
1137. Program Tracking and Reporting Subsystem (PTRS) Input 4-595

VOLUME 4. TABLE OF CONTENTS—Continued

Page

1139. Final Step 4-595
1140.-1148. Reserved 4-595

Section 4. MEL Use in Service

1149. General 4-609
1151. Revision Procedures 4-609
1153. Tracking of Revision Status 4-610
1155. Availability of MEL for Flight Crewmembers 4-610
1157. Method of Authorizing Flight Crewmember Access to MEL 4-610
1159. Discrepancies Discovered During Flight 4-611
1161. Documentation of Discrepancies 4-611
1163. Conflict with Airworthiness Directives 4-611
1165. Interrelationships of Inoperative Components 4-611
1167. Repair Categories 4-611
1169. Program Tracking and Reporting Subsystem (PTRS) Input 4-612
1170.-1180 Reserved 4-612

Section 5. Master Minimum Equipment List Subsystem (MMEL Subsystem)

1181. Background 4-623
1183. General 4-623
1185. System Capability 4-623
1187. System Access Instructions and Support 4-623
1189. Automatic Notification 4-623
1191. MEL Status Reports 4-623
1193. Global Changes 4-623
1195. Public Access to MMEL 4-623
1196.-1206. Reserved 4-624

Section 6. Configuration Deviation Lists

1207. General 4-637
1209. Development and Approval of a CDL 4-637
1211. Use of the CDL 4-637
1213. Operational Control 4-637
1214.-1334. Reserved 4-637

CHAPTER 5. AIR AMBULANCE OPERATIONS

Section 1. Background and Definitions

1335. Introduction 4-759
1337. Operators Requiring Air Ambulance Operations Specifications Paragraphs 4-759
1339. Definitions 4-760
1341. Overview of Helicopter Air Ambulance Services 4-760
1343. Overview of Airplane Air Ambulance Services 4-761
1345. FAA Policy Regarding "Compensation or Hire" Considerations for Charitable Flights or Life Flights 4-762
1346.-1354. Reserved 4-762

Section 2. Authorizations for FAR Part 135 Air Ambulance Services

1355. General 4-775
1357. Existing Operators Initiating Air Ambulance Operations 4-775
1358.-1368. Reserved 4-776

VOLUME 4. TABLE OF CONTENTS—Continued

Page

Section 3. Air Ambulance Service Operational Procedures

1369. General 4-789
1371. Administrative Procedures 4-789
1373. Pre-flight Planning 4-790
1375. Inflight Procedures 4-790
1377. Emergency Procedures 4-791
1379. Servicing of Aircraft With Patients On Board 4-791
1381. Postflight Procedures 4-792
1382.-1392. Reserved 4-792

Section 4. Air Ambulance Service Training Programs

1393. General 4-805
1395. Helicopter Training Programs 4-805
1397. Airplane Training Programs 4-805
1399. Medical Personnel and Flightcrew Coordination Training 4-806
1400.-1460. Reserved 4-806

CHAPTER 6. AIRPLANE AUTHORIZATIONS AND LIMITATIONS

Section 1. Selected Practices

1461. General 4-869
1463. Airborne Thunderstorm Detection Equipment Requirements for Part 135 Operations . 4-869
1465. Passenger Occupancy of a Pilot Seat 4-869
1466.-1532. Reserved 4-870

CHAPTER 7. ROTORCRAFT AUTHORIZATIONS AND LIMITATIONS

Section 1. IFR Offshore Operations

1533. Introduction 4-941
1535. General 4-941
1537. Application Process for Helicopter IFR Offshore Operations 4-941
1539. Specific Operator Requirements and Procedures 4-941
1541. Geographic Coordination 4-942
1542.-1552. Reserved 4-942

Section 2. Helicopter En Route Descent Areas (HEDA)

1553. General 4-949
1555. Request for Approval of HEDA 4-949
1557. District Office Approval Procedures 4-949
1559. HEDA Pictorial and Plan View Criteria 4-950
1560.-1570. Reserved 4-950

Section 3. Offshore Instrument Approach Procedures

1571. General 4-961
1573. Approach Approval Procedures 4-961
1574.-1682. Reserved 4-961

CHAPTER 8. GROUND DEICING/ANTI-ICING PROGRAMS

Section 1. General

1683. Background 4-1061
1685. Rule 4-1061
1687. FAR Part 121 Ground Deicing/Anti-Icing 4-1061
1689. FAR Part 121 Definitions 4-1062

VOLUME 4. TABLE OF CONTENTS—Continued

Page

1691. FAR Part 121 Ground Deicing/Anti-Icing Program 4-1062
1693. Management Plan 4-1062
1695. Holdover Timetables and the Procedures for Their Use 4-1062
1697. FAR Part 135 Ground Deicing/Anti-Icing Training and Checking Rule 4-1063
1699. Pretakeoff Contamination Check 4-1064
1701. Applicability of the Part 135 Ground Deicing Rule 4-1064
1703. Training Requirements of the FAR Part 135 Ground Deicing Rule 4-1064
1705. Sources of Information 4-1065
1706.-1738. Reserved 4-1066

Section 2. Approval of FAR Parts 121 and 135 Procedures

1739. General 4-1091
1741. Approval Process 4-1091
1743. Phase One—Initial Discussion 4-1092
1745. Phase Two—Initial Operator Submission 4-1092
1747. Phase Three—Preliminary Approval 4-1093
1749. Phase Four—Validation Testing 4-1094
1751. Phase Five—Final Approval 4-1095
1753. OpSpecs Issuance Instructions 4-1095
1754.-1774. Reserved 4-1095

CHAPTER 9. LOW VISIBILITY TAXI OPERATIONS

Section 1. Background and Responsibilities

1775. General 4-1141
1777. Background 4-1141
1779. Applicability 4-1141
1781. Air Carrier Responsibilities 4-1141
1783. FAA Responsibilities 4-1141
1784.-1794. Reserved 4-1142

Section 2. Implementation and Surveillance

1795. General 4-1153
1797. Implementation 4-1153
1799. Surveillance 4-1153
1800.-1810. Reserved 4-1153

CHAPTER 1. AIR NAVIGATION AND COMMUNICATIONS

SECTION 2. AIR NAVIGATION APPROVAL REQUIREMENTS

31. GENERAL. This section contains direction and guidance to be used by inspectors for approving operator requests for air navigation operations. Inspectors approve these operations by issuing appropriate operations specifications paragraphs, such as B36. Except for Class I navigation, the approval process normally requires validation testing. The five phases of the validation test process are described in volume 3, chapter 9, section 2. Volume 3, chapter 9, section 8, contains a detailed discussion of validation testing requirements. This section provides additional guidance specifically related to air navigation requirements.

33. INSPECTOR—SUBJECT FAMILIARIZATION AND APPROVAL REQUIREMENTS. Once an operator has requested approval for air navigation operations, it is essential that inspectors fully understand the concepts, national policies, standard practices, direction, and guidance related to the area of proposed operations. Section 1 and subsequent sections of this chapter contain much of this information and additional references for more detailed information and guidance. In addition, Federal Aviation Administration (FAA) navigation technical specialists are available to assist principal inspectors in understanding, evaluating and approving air navigation operations. When processing operator requests for air navigation operations (especially for new approvals), principal inspectors should request guidance from a navigation specialist at one of the following locations: the San Francisco (SFO) International Field Office (IFO) at (415) 876-2765, the New York (NYC) Flight Standards District Office (FSDO)-15 at (718) 553-1848, or the operations section of AFS-400.

35. DETERMINING THE CLASS OF NAVIGATION. The first determination that must be made concerning an air navigation approval request is the category of operation proposed. The inspector must determine whether the proposed operation is Class I navigation, Class II navigation, or both. The decisive factor in this determination is the operational service volume of public navigational aids (NAVAID) within the proposed area of operation. If the minimum en route flight altitudes specified and the locations of the public NAVAID's ensure that the flight will always be within the operational service volume, the entire en route operation is Class I navigation. In situations where the entire area of operation (at the minimum flight altitude specified) is outside (beyond) the operational coverage volume of public NAVAID's, the operation is Class II navigation. When portions of the proposed area of operation ensure that flights are continuously within the operational service volumes of public NAVAID's, that portion of the flight is Class I navigation, and the remaining portion is Class II navigation (see sections 3 and 4 of this chapter for in-depth discussions of Class I and Class II navigation).

A. Flight Altitude. It is important to understand that the minimum flight altitude is a key factor in the determination of the category of navigation (Class I or Class II). The operational service volume of a particular public NAVAID is heavily influenced by flight altitude. For example, at high altitude (above flight level (FL) 180), most very high frequency omnidirectional range stations (VOR) published for use at these altitudes have an operational service volume that extends to a radius of at least 130 nautical miles (nm) from the facility. However, at low altitudes (below 10,000 feet), the operational service volume of many VOR's seldom exceeds 40 nm. Therefore, it is highly probable that, for a route length of 260 nm between VOR's, operations above FL 180 would be Class I navigation and operations conducted below 10,000 feet would include both Class I and Class II navigation. The Class II navigation portion would begin at the edge of the operational service volume of the first VOR and end at the edge of the operational service volume of the second VOR. If the inspector determines that the proposal only involves Class I navigation, the direction and guidance in section 3 will be used. If the proposal involves both Class I and Class II navigation, the direction and guidance in sections 3 and 4 will be used for evaluation and approval or denial of the proposal.

B. Range of NAVAID's. Generally, determination of the exact range (operational service volume) of the NAVAID's intended to be used is not necessary.

A flight departing from the continental United States (U.S.) with a destination in Europe, for example, would obviously perform both Class I and Class II navigation and require equipment appropriate for both. In other situations it can be readily determined that flight operations will be conducted entirely within the operational service volume of federal NAVAID's. However, sometimes a determination of the exact range of a NAVAID is required to evaluate compliance with the requirement for a reliable fix once each hour. In the U.S., the frequency management branch in each region may be contacted to determine if a particular NAVAID has been flight-checked to a range greater than standard.

C. U.S./Coastal Operations. Within the U.S. and in nearby coastal areas under U.S. control, the Class I/Class II determination is simplified since any published instrument flight procedure (victor or jet airway, standard instrument departure (SID), or standard terminal arrival (STAR)) must be within the operational service volume of federal NAVAID's. Therefore, within the U.S., any route or fix published for instrument flight can be authorized for Class I navigation provided that the flight is conducted at or above the specified instrument flight rules (IFR) minimum altitude and at or below any IFR maximum authorized altitude specified.

D. Foreign/Remote Operations. In foreign countries and in oceanic/remote areas, this determination is more complex. In these cases, the determination is based on an equivalence to U.S. standards. In general, VOR, VOR/distance measuring equipment (DME) routes and fixes published in those areas are within the operational service volume (or foreign equivalent) of the NAVAID's specified. However, most air traffic service (ATS) routes based on nondirectional beacons (NDB) in oceanic/remote areas are Class II navigation over a considerable portion of the route. For example, the standard service volume (or coverage) of high-powered NDB's seldom exceeds 75 nm. (In special cases, a few NDB's have been evaluated by flight inspection and have an officially designated extended service volume significantly greater than 75 nm.) The flight inspection field office (FIFO) assigned responsibility for the geographic areas in question is the best and most up-to-date source of information on the operational service volume of these NAVAID's.

37. SPECIAL OPERATIONS. After determining whether a particular operation is Class I navigation, Class II navigation, or a combination of both, another important step is to determine if the operation involves any specific navigation authorizations to operate into special areas of operation or to use special navigation equipment or special navigation techniques.

A. Special Areas of Operation. Examples of special areas of operation include the following:

- Areas of magnetic unreliability
- North Atlantic Minimum Navigation Performance Specification (NAT/MNPS) airspace
- Canadian MNPS airspace
- Central East Pacific (CEPAC) Composite airspace
- North Pacific (NOPAC) airspace
- Sensitive international areas
- Arctic Ocean or Antarctic
- Western Atlantic, the Caribbean Sea, and the Gulf of Mexico
- South Atlantic and Gulf of Mexico control areas (Atlantic and Gulf routes)

B. Special Navigation Equipment. Examples of special navigation equipment include the following:

- Private NAVAID's or broadcast stations
- Area Navigation (RNAV)
- Long-Range Navigation (Loran-C)
- DECCA
- Tactical Air Navigation (TACAN)
- Omega
- Inertial Navigation Systems (INS) and Inertial Reference Systems (IRS)
- Doppler
- Global Navigation Satellite System (GNSS)

C. Special Navigation Techniques. Examples of special navigation techniques and/or procedures include the following:

- Pilotage
- Flight navigator
- Dead reckoning (DR)
- Celestial
- Pressure pattern
- Free gyro or grid

39. AIRWORTHINESS OF NAVIGATION EQUIPMENT. After determining the requirements related to any special operation, another important step is to determine whether the navigational equipment

and systems are airworthy and can perform their required functions. In all cases, it is necessary for the operator to provide written evidence that the proposed navigational systems and equipment are certificated for the type of operation (visual flight rules (VFR) or IFR) and the category of operation (Class I or Class II). In certain cases involving special areas of operation, such as areas of magnetic unreliability and NAT/MNPS, the airworthiness approval must reflect that these special requirements are also met. The written evidence may take the form of a type certificate (TC), supplemental type certificate (STC), or a Field Approval (FAA Form 337, "Major Repair and Alteration (Airframe, Powerplant, Propeller, or Appliance)"). This determination must be coordinated closely with the principal avionics inspector (PAI), or the regional Flight Standards airworthiness branch.

A. Class I Navigation. In the case of Class I navigation with conventional navigation equipment (such as VOR, VOR/DME, NDB), a statement in the FAA-approved flight manual (or an STC) that the navigation system and/or equipment is approved for IFR flight is usually sufficient.

B. Area Navigation (RNAV). RNAV systems used for IFR Class I navigation (except operations in the U.S. Class A airspace) must reflect a statement that the system meets the reliability and performance criteria of Advisory Circular (AC) 90-45, "Approval of Area Navigation Systems for Use in the U.S. National Airspace System," (or equivalent). RNAV systems used for VFR operations (Class I and/or Class II) must reflect an approval for VFR use.

C. Class II Navigation. Class II navigation systems used for IFR operations must reflect a statement that the system is approved for IFR flight and, if required, for any special areas of operation. The following are examples of Class II navigation systems requiring airworthiness approvals:

(1) Omega systems used as the sole means of Class II navigation must be approved under the provisions of AC 120-37, "Operational and Airworthiness Approval of Airborne Omega Radio Navigational Systems as a Sole Means of Long Range Navigation Outside the United States," (or equivalent).

(2) Omega systems used to update self-contained Class II navigation systems must be approved under the provisions of AC 120-31, "Operational and Airworthiness Approval of Airborne Omega Radio Navigation Systems as a Means of Updating Self-Contained Navigation Systems," (or equivalent).

(3) Loran-C systems must be approved for the area of operation under the provisions of AC 20-121, "Airworthiness Approval of Airborne Loran-C Navigation Systems for Use in the U.S. National Airspace System (NAS)," (or equivalent). See also AC 90-92, "Guidelines for the Operational Use of Loran-C Navigation Systems Outside the U.S. National Airspace System (NAS)."

(4) Inertial-based and Doppler systems must be approved under the provision of Federal Aviation Regulations (FAR) § 121.355 and Appendix G. This approval is not specifically required for FAR Part 135, but the same approval criteria apply.

41. TRAINING PROGRAMS AND MANUALS. Other important areas that must be considered are training programs and company manuals for the equipment used. The training programs and company manuals must adequately address the special characteristics of the proposed area of operation and the operational (navigation) practices and procedures that must be used. Other sections of this chapter provide additional direction and guidance on some specific requirements for training programs and company manuals for the various navigation systems and/or areas of operation.

43. MINIMUM EQUIPMENT LISTS. Additionally, most approvals of navigation equipment and/or areas of operation new to a particular operator also require changes to the company minimum equipment list (MEL). In all cases, principal inspectors shall review the company MEL to ensure that complete and accurate direction and guidance are provided to company personnel.

45. NAVIGATION PRACTICES, TECHNIQUES, AND PROCEDURES. Navigation practices, techniques, and procedures are other important parts of the approval process. They are especially significant in long-range navigation systems and in operations using RNAV systems. The approval of these operations almost always necessitates changes in cockpit checklists and operating practices and procedures. Due to the complexity of these operations, the necessary changes must be determined on a case-by-case basis considering the operator, the equipment, and the area of operations. In the case of Class II navigation, it is FAA policy that the practices, techniques, and procedures in AC 90-79, "Recommended Practices and Procedures for the Use of Electronic Long-Range Navigation Equipment," (or equivalent) shall be incorporated in the operator's approved long-range navigation programs.

47. VALIDATION TESTING REQUIREMENTS. It is essential for the inspector to evaluate the need for validation testing. In a simple case, such as approving Class I navigation in additional areas within the U.S. using conventional VOR/DME systems, a validation test is not necessary. However, in

more complex cases, validation testing is essential to demonstrate the operator's capability and competence to safely conduct the proposed operation (see volume 3, chapter 9, section 8).

49. GUIDANCE FOR USE OF AIRCRAFT EQUIPMENT SUFFIX /G. This paragraph describes a new equipment suffix available for use by aircraft equipped with a flight management system (FMS) and the eligibility of these aircraft to use new and evolving terminal area and en route flight operations. POI's should refer to this paragraph for policy, guidance, and descriptions of the specific aircraft equipment capability required to use the /G suffix.

A. General. FAA Order 7100.11, "Flight Management System (FMS) Procedures Program," contains the criteria to develop FAR Part 97 procedures, SID's, and STAR's, which will contain the note "FOR USE BY SLANT GEE (/G) AIRCRAFT ONLY." The order defines "/G" as an aircraft equipment suffix denoting that the aircraft has an FMS that meets the requirements of the following: AC 20-129, "Airworthiness Approval of Vertical Navigation (VNAV) Systems for Use in the U.S. NAS and Alaska"; AC 20-130, "Airworthiness Approval of Multi-Sensor Navigation Systems for Use in the U.S. National Airspace System (NAS) and Alaska"; AC 25-15, "Approval of Flight Management Systems in Transport Category Airplanes"; ARINC Specification 424-11; and RTCA DO-187. (FAA Order 7110.65, "Air Traffic Control," and the "Airman's Information Manual" (AIM), paragraph 5-7, are being amended to avoid conflict in the collective definitions.) Compliance with the following criteria will enable the operator to file /G on flight plans. The /G designation will also permit air traffic service personnel to initiate clearances at their discretion without receiving prior requests from flightcrews. To be eligible to utilize the /G suffix on a flight plan, the following criteria must be met:

NOTE: The AC's listed in this subparagraph are available from the Department of Transportation (DOT), Utilization and Storage Section, in Washington, D.C., or through regional distribution channels.

(1) Required Airborne Equipment. This consists of dual or single FMS's that meet the specifications of AC's 20-129, 20-130, and 25-15; or equivalent criteria accepted by the FAA.

(2) Additional Requirements.

(a) Flightcrews must have the procedural information and charts depicting the procedure to be flown.

(b) Unless otherwise authorized by the FAA, the waypoints describing any applicable route or procedure must be automatically loaded into the FMS flight plan from the FMS data base in the sequence they are to be flown. Manual input is not acceptable.

(c) Until international agreement is reached, use of the /G classification is authorized only in airspace where a U.S. air traffic facility provides air traffic separation service. For the /G designation to continue to be used in flight after a failure, the required navigation capability must still be met, or the flight plan classification must be downgraded to the appropriate capability classification (such as /R, /A).

B. Aircraft /G Eligibility and Assessment. Aircraft considered eligible to meet the criteria listed in this paragraph include the following:

- A-300-600; A-310; A-320; A-330; A-340
- B-737-300/400/500; B-747-400; B-757; B-767; B-777
- FK-100
- G-IV
- MD-11; MD-88

C. Inquiries. Any comments or inquiries concerning the criteria and guidance to qualify and use the /G equipment suffix or any requests for assessment of additional aircraft should be directed to the Technical Programs Division, AFS-400, at (202) 267-8452.

50.–70. RESERVED.

[PAGES 4-27 THROUGH 4-32 RESERVED]

by dead reckoning. The special provision of radar surveillance provides the equivalent level of safety for aircraft separation even through dead reckoning may be required for relatively long periods of time (approximately 45-50 minutes). In addition, due to the proximity of these routes to shore-based facilities, the accuracy of dead reckoning can be enhanced by using position fixing information from shore-based VOR/DME NAVAID's. Dead reckoning techniques and procedures must be included in the FAA-approved training program for operation on these routes. It should include contingency training for diversions such as weather avoidance or emergencies. See paragraphs 121A and 123.

C. Approval of the use of ICAO standard NAVAID's supplemented by dead reckoning in the South Atlantic and Gulf of Mexico control areas is granted by entering these areas in paragraph B50 of the operations specifications.

161. SPECIAL AREAS WHERE REDUNDANT LONG-RANGE NAVIGATION SYSTEMS ARE USUALLY NOT REQUIRED. Certain special areas have been identified where long-range navigation can be conducted with a single long-range navigation system.

A. Concept. The provisions of the FAR related to Class II navigation do not specifically require redundant or dual long-range navigation systems. The primary Class II navigation requirements are related to the level of navigational performance necessary for the control of air traffic. The objective of requirements for redundant navigational systems is to permit the flight to continue to navigate to the degree of accuracy necessary for the control of air traffic in the event a failure occurs in the navigational system being used.

(1) In certain situations, Class II navigation can be safely conducted using ICAO standard NAVAID's supplemented by dead reckoning. See section 4. Operations can also be safely conducted in much larger areas using a combination of redundant ICAO standard NAVAID's and a single, long-range navigation system. The basic concept for these operations considers the availability of ICAO standard NAVAID's, the lateral separation minimums applied by ATC (the navigational performance required), the length of the route or route segment, the complexity of the route structure, and the density of the air traffic.

(2) When the long-range navigation segment of the route flown is relatively short (several hours), the ATC lateral separation minimums are large (usually 90 nm or more), and the upper air winds are relatively stable, single long-range navigation systems may be adequate. The primary concern related to the use of single long-range navigation systems is preserving the ability to navigate to the degree of accuracy required for the control of air traffic following a failure in the long-range navigation system. Historically, the required navigational performance (following such failures) has been provided by the use of dead reckoning and ICAO standard NAVAID's. Since dead reckoning is much less accurate than using a long-range navigation system, the period of time that dead reckoning must be used is the most critical factor. Operational experience and analysis has shown that turbojet operations can be safely conducted (within special areas described in this paragraph) with an approved, single long-range navigation system and the redundant means of using ICAO standard NAVAID's.

B. Special Provisions for the Western Atlantic Ocean, Caribbean Sea, and Gulf of Mexico. The unique nature of the Western Atlantic Ocean, the Caribbean Sea, and the Gulf of Mexico permits operations with turbine-powered airplanes and certain offshore helicopter operations to be safely conducted with a single approved long-range system. Approval of the use of a single long-range navigation system is granted by entering a note in the limitations, provisions, and reference paragraphs column of paragraph B50 of the operations specifications. The note should indicate that a single system (specify the system make) is authorized. The areas of operation where these operations may be authorized in paragraph B50 of the operations specifications are as follows:

- The Gulf of Mexico
- The Caribbean Sea
- The North Atlantic Ocean west of the western boundary of NAT/MNPS airspace and west of a line from 27 degrees N/60W to 10 degrees N/55W

C. Special Provisions for Certain Routes in NAT/MNPS Airspace. Special contingency routes have been established in limited portions of NAT/MNPS airspace where aircraft equipped to use standard ICAO NAVAID's can operate with a single long-range navigation system. These routes are specified in the International Flight Information Manual (IFIM). Operations over these routes can be authorized provided the operator shows that the long-range navigation system/aircraft combination used and the operational procedures used meets NAT/MNPS requirements (AC 120-33). The approval is granted in accordance with paragraph B39(d) of the operations specifications and by adding that area of en route operation to paragraph B50 of the standard operations specifications.

D. Other Special Areas. Inspectors shall not authorize operations with single long-range navigation

systems in any other areas of operation without the review and concurrence of AFS-200. When a request to operate with single long-range navigation systems in areas not described in this paragraph is received, inspectors shall request assistance from one of the agency's navigation specialists. If the responsible inspector and the navigation specialist determine that the proposed operation can be safely conducted, a request for review and concurrence should be forwarded, through regional office, to AFS-200. AFS-200 will provide national direction and guidance for evaluating and approving or denying the proposed operation.

163. AIR TRANSPORTATION OPERATIONS WITHIN THE FORMER SOVIET UNION. The geopolitical area formerly known as the Soviet Union is now comprised of the Commonwealth of Independent States (C.I.S.) and other independent states. This group of aligned and independent states will be referred to as the C.I.S. throughout this volume.

A. General. As a result of the new bilateral air transportation agreement between the U.S. and the Russian Federation, a significant increase in air transportation between the two countries is expected. Due to the short distance between the state of Alaska and the C.I.S., significant increases in air traffic are expected in the far eastern portion of this region. This area, traditionally called the Soviet Far East (SFE), is now known as the Russian Far East (RFE). This section contains specific guidance to be used by POI's who have been asked to approve operations by U.S. air carriers within the C.I.S. Prior to beginning such approval, coordination with AFS-500 is required.

(1) Overview of Regional Differences in the C.I.S. The C.I.S. is more than twice the size of the U.S. and is significantly more diverse in aviation infrastructure. Flight operations within the western part of the country (generally west of the Ural mountains) are considerably less challenging than flights in the eastern part of the country. In the east, primarily due to limited facilities, sparse population, and harsh winter weather, routine flight planning may be difficult. Communications, navigation, and airport availability require special emphasis before the initiation of flights within this region. Operating aircraft in the western C.I.S. is generally less demanding; however, many significant operational differences exist.

(2) Overview of Airport and Airway Differences Within the C.I.S. The airports and airways in the C.I.S. are divided into two categories: international and domestic.

(a) International Airports and Airways. International routes and airports in the C.I.S. are generally available for use by foreign aircraft operators, provided the operators have received appropriate flight authorizations from C.I.S. and FAA authorities. These routes and airports are published in the Russian AIP. ATC communications are provided in English, and airports have customs and immigration services as well as fuel (AVGAS availability is limited). Instrument approach procedures are generally available in ICAO format and are similar to approach procedures used worldwide.

(b) Domestic Airports and Airways. Domestic airports and routes in the C.I.S. are generally not usable by foreign aircraft operators unless a Russian navigator is utilized to communicate with ATC and provide instructions to the flightcrew regarding navigation principles and procedures. En route and terminal air traffic control within the domestic systems are accomplished in the Russian language since a large percentage of C.I.S. air traffic controllers do not speak English. En route charts and instrument approach procedures for the domestic system are not published in English, are generally not available to foreign aircraft operators, and may not meet ICAO requirements. Weather and NOTAM information will be difficult or impossible to obtain and will not be provided in English or in standard format.

(3) General Navigational Considerations.

(a) The conduct of navigation off established airways in the C.I.S. is generally not permissible; therefore, foreign aircraft operations are restricted to published international routes and airports, even for refueling stops and alternate airports. Appropriate flight crewmember training on metric conversion and the availability in flight of conversion charts are necessary to enable crewmembers to convert metric altitudes, weights, and windspeeds. Although operators are permitted to conduct flights to or within the C.I.S. under visual flight rules (VFR), there are significant C.I.S. flight rule differences that normally preclude foreign aircraft operators from conducting flights under VFR.

(b) In some areas, ATC procedures have been developed that allow operations off published routings by using radar vectors. If clearance is received to operate off airways, the carrier is authorized to accept the clearance. However, due to military concerns, it is possible that the radar vectors received may not be most expeditious for the carrier.

B. Areas of Consideration. When reviewing an operator's proposal for operations within the C.I.S., POI's should review the following:

(1) Russian AIP. This is the primary document available concerning foreign aircraft operations

within the C.I.S. The Russian AIP is published by the Aeronautical Information Service (AIS), which is part of the Department of Air Transport (DAT) of the C.I.S. It is published in both Russian and English and contains detailed flight operational requirements as well as terminal, airport, and instrument approach charts in ICAO format. It is available from the AIS on an annual subscription basis, including monthly revisions. Subscription service or further information may be obtained from the following address:

Aeronautical Information Service
Department of Air Transport
67 Svoboda Street
Moscow, Russia
Telephone 492-82-85
AFTN: UUUUYOYX
Telex: 411182, AIS

NOTE: The navigation charts and standard instrument approach procedures (SIAP) for the C.I.S. domestic system are not included in the AIP and are usually not available in English.

(2) Communications. POI's should be aware that communications to, from, and within the C.I.S. can be difficult. Some specific areas of communication that POI's should consider include the following:

(a) ATC Communications. The ATC communication system within the C.I.S. is generally good. VHF is commonly used for en route communications, but HF is required for certain routes. The communication equipment requirements are listed in the Russian AIP. POI's are encouraged to evaluate all routes used by their assigned air carriers to ensure the adequacy of communications. Unlike U.S. controllers, C.I.S. air traffic controllers have limited access to weather and NOTAM information.

(b) Aeronautical Fixed Telecommunications Network (AFTN) or Society Internationale de Telecommunications Aeronautique (SITA) Networks. Data transmission and reception is accomplished by using the AFTN or SITA networks, although in remote areas only AFTN may be available. Transmitting or receiving messages by using the AFTN system within the C.I.S. (to and from many remote areas, especially in the RFE) may be less timely than desirable. This is because most messages enter and depart the C.I.S. in Moscow, and manual manipulation of messages is required at many transfer stations before and after reaching Moscow. Also, the existing telecommunications infrastructure is not reliable. No error checking is done; for example, if, because of a formatting error or for some other reason, a message is rejected en route, no one checks on this; the message is just dumped.

(c) Telephone Service. Telephone service to, from, and within the C.I.S. is limited. Various systems are used, including an HF troposcatter system which, due to technical limitations, makes communication extremely difficult. Establishing necessary reliable communications to and from line stations within the C.I.S. may be more difficult than in other areas.

(3) Navigation. It is permissible to conduct navigation on international routes within the C.I.S. by utilizing Class I or Class II navigation systems. Route widths vary from 8 km to 20 km, as indicated in the Russian AIP. It is the pilot's responsibility to keep the aircraft within established airway boundaries. Available altitudes also vary from one route to another as identified in the Russian AIP. When planning flights, operators must ensure that the desired altitudes are available for particular routes. This is especially important in the RFE where there is usually only one route available for flights. In the RFE, Class I en route navigation on international routes is primarily accomplished by utilizing NDB's); however, numerous compatible VOR transmitters will be installed in the coming years. In the western C.I.S., compatible VOR transmitters are also utilized to define international routes. In certain situations, especially in the RFE, it may be necessary to require operators to utilize Class II navigation to supplement Class I navigation due to the distance between NAVAID's and the limited width of airways. Class II en route navigation on international routes should be relatively simple, provided two conditions are properly addressed. The first condition is that, depending on the published route widths, length of flight, and type of Class II navigation equipment utilized, it may not be possible for an operator to maintain the course centerline accuracy required by the C.I.S. Limitations on the operation of some VLF/Omega systems, as shown in the flight manual supplement of the AFM, may preclude their use in some areas of the C.I.S. The second condition concerns the lack of VOR/DME transmitters, especially in the RFE, which means that special consideration must be given by operators to navigation accuracy requirements when utilizing inertial reference systems (IRS), such as B-757, B-767, and A-310. Again, it may not be possible to obtain the required navigation accuracy unless, considering the specific route and length of flight, VOR/DME updates are provided to the IRS. Other areas concerning navigation that POI's must consider when evaluating operator requests include the following:

(a) Alternate Airports. For flight planning purposes, operators must give careful consideration to the location of, and routing to, suitable alternate airports. Fuel planning must be carefully considered

due to potential difficulties with communications, diversion airport routings, and the lack of suitable airports.

(b) Extended Range Operation With Two-Engine Airplanes (ETOPS). Operations in certain areas with two-engine aircraft may require ETOPS approval due to the lack of adequate/suitable airports within 60 minutes of the operator's route. AC 120-42, "Extended Range Operation With Two-Engine Airplanes (ETOPS)," as amended, contains additional information.

(c) C.I.S. Navigator Assistance. The conduct of navigation within the C.I.S. is the responsibility of the pilot-in-command (PIC). Flights operating off of established international routes, or on the domestic route system, usually will not be permitted by the C.I.S. unless a C.I.S. navigator is aboard. In unique situations, a radio operator will also be required; however, these two functions are usually performed by the navigator. The assistance of a navigator will also be required for flights to or from any C.I.S. domestic airport. Although the navigator may be required by the C.I.S., the navigator is not a required flight crewmember according to the FAR and is not responsible for the conduct of the flight. The purpose of the navigator is to provide assistance in cross-checking course guidance information en route and to provide assistance in cross-checking information on terminal arrivals and departures, as well as instrument approach procedures (IAP). Due to jumpseat management considerations, POI's and operators should consider carefully any requests to carry C.I.S. navigators/radio operators. POI's shall obtain the concurrence of AFS-200 before approving an operator's carriage of these persons. When evaluating C.I.S. navigator/radio operator requirements, inspectors and operators should consider the following information:

1. Due to the lack of informational and technical data pertaining to operations in the C.I.S. domestic system, which are needed to meet requirements of FAR Parts 121 and 135, it may not be possible for operators to conduct operations at most domestic airports at this time.

2. C.I.S. navigators are required to use a cockpit jumpseat, which may preclude an FAA inspector from accomplishing a required en route inspection or validation test on a particular flight or series of flights.

3. The charts for the domestic system are usually not available in English.

4. The Russian DAT charges a substantial fee for the use of navigators.

(d) Area of Magnetic Unreliability. Depending on the latitude of the routes flown, operations may be conducted within the C.I.S. area of magnetic unreliability. Procedures for approving flights within an area of magnetic unreliability can be found in volume 3, paragraph 139; and in volume 4, paragraph 151.

(e) Approval of VFR-Only Flights for FAR Part 135 Operators. Due to complex VFR flight requirements (as identified in the Russian AIP) and requirements that aircraft operate on established airways at assigned altitudes, the approval of VFR-only flights by FAR Part 135 air carriers is not recommended. Deviations around clouds under C.I.S. flight rules will be difficult or impossible to achieve due to the rigidity of the C.I.S. airspace requirements to maintain airway altitude and airway centerline. Approval of FAR Part 135 VFR-Only air carrier operations within the C.I.S. shall be coordinated with AFS-200.

(4) Terminal IAP's. Terminal IAP's at international airports within the C.I.S. are conventional and should not be confusing to foreign operators. Arrival and departure procedures are similar to U.S. standard terminal arrival routes (STAR) and standard instrument departures (SID). Radar vectoring is uncommon; therefore, flight crewmembers should expect to fly full procedures as published in the AIP or Jeppesen charts. Flight crewmembers should be aware that use of QFE (atmospheric pressure at airport elevation) is common, and transition levels vary from one sector to another. IAP's are standard (instrument landing system (ILS), VOR, NDB). Precision radar approaches (PAR) are also very common throughout the C.I.S.; however, it is recommended that POI's exercise caution when approving requests by air carriers to conduct PAR's within the C.I.S., due to the lack of English language proficiency by most local air traffic controllers. POI's whose operators wish to conduct PAR's within the C.I.S. should approve these operations on an airport-by-airport basis. AFS-500 should be consulted for information as to current problems and policies. Terminal IAP's at domestic airports are usually neither published in English nor readily available to foreign air carriers. Therefore, POI's must ensure that their operators have obtained and demonstrated the adequacy of the data and meet the applicable portions of appropriate FAR concerning routes, airports, weather, and communication. C.I.S. navigators, who are required for foreign aircraft operators within the domestic system, will carry en route, terminal area, and instrument approach charts for their use within the domestic system. These charts are generally available in Russian language only. During all operations, the flightcrew shall utilize only publica-

tions that have been translated into English. These may be obtained from commercial sources. Class II navigation capability will likely be required for operators navigating within the domestic system, due to the inability of foreign aircraft to receive signals from the C.I.S. VHF RSBN (short-range navigation system). Many NAVAID's (VHF RSBN and NDB) within the domestic system use identifiers that do not have an English translation. POI's must reference FAA Order 8260.31,"Foreign Terminal Instrument Procedures," for guidance and approval criteria to ensure that established safety standards are met.

(5) Air Carrier Training Programs. Revisions to air carrier training programs and/or international procedures training for flight crewmembers may be required prior to issuing operations specifications. POI's should ensure that appropriate information contained in the Russian AIP is incorporated into air carrier training programs. For further guidance on training programs, refer to volume 3, chapter 2.

(6) Flight Approval. According to both the Russian AIP and the IFIM, an operator must receive written approval from DAT-Moscow before initiating a flight that will enter C.I.S. airspace. Operators shall not request flight approval through any regional ministry or Aeroflot office. Any approval granted by a regional office should not be considered sufficient unless accompanied by approval from DAT-Moscow. Aircraft operators intending to utilize standard air corridors and international airports in the C.I.S. should submit their request, via telex, directly to the DAT, far enough in advance so as to reach the ministry at least 5 working days (3 weeks is suggested) before departure. The telegraphic address is as follows:

International Department
Department of Air Transport
Leningradsky Prospect 37
Moscow, Russia
Telex: 411182 AFL SU

It is recommended that a simultaneous request be made to the Central Department of Operational Services (CDOS). The telegraphic address is as follows:

Central Department of Operational Services
Telex: 412303 CDS SU
AFTN: UUUUYAYW
SITA: MOWZGSU

Operator requests for aircraft using nonstandard routings and/or intending to land at airports normally serving domestic traffic should be submitted through the Economic Section of the U.S.Embassy in Moscow, APO, NY, 09862. The telegraphic address is as follows:

Amembassy Moscow
Telex: 413160 USGSO SU

Information to be included in Telex is listed in the AIP and IFIM. Recent operator experience indicates that the communication infrastructure may preclude receiving this authority in a timely manner. Personal presentations, to include objectives and justification, may be more effective.

(7) Validation Test Requirements. These are required for all U.S. operators seeking approval to operate within C.I.S. airspace. Guidance for validation tests is contained in volume 3, chapter 9.

164.–174. RESERVED.

[PAGES 4-70 THROUGH 4-80 RESERVED]

CHAPTER 1. AIR NAVIGATION AND COMMUNICATIONS

SECTION 6. GENERAL COMMUNICATION CONCEPTS, POLICIES, AND GUIDANCE

175. GENERAL. For all operations, Federal Aviation Regulations (FAR) § 91.183 requires that the pilot-in-command (PIC) of each aircraft maintain a continuous watch on the appropriate frequency when operating under instrument flight rules (IFR) in controlled airspace. This section contains information and guidance concerning the communication equipment requirements for FAR Parts 121 and 135 over-water operations.

177. VERY HIGH FREQUENCY (VHF)/HIGH FREQUENCY (HF) COMMUNICATIONS. (TBD)

179. COMMUNICATION EQUIPMENT REQUIREMENTS FOR OVER-WATER OPERATIONS.

A. Over-water Operations. FAR § 91.511 identifies the radio equipment that is required when operating "over water" more than 30 minutes' flying time or 100 nautical miles (nm) from the nearest shore. Different from the "extended over-water" definition found in FAR Part 1, this term is applied to FAR Part 91 operations of large and turbine-powered multi-engine airplanes.

B. Extended Over-water Operations. FAR Part 1 defines "extended over-water operation" for airplanes as "an operation over water at a horizontal distance of more than 50 nautical miles from the nearest shoreline . . ." and, for helicopters, as "an operation over water at a horizontal distance of more than 50 nautical miles from the nearest shoreline and more than 50 nautical miles from an off-shore heliport structure." The definition applies to both FAR Part 121 and 135 operations.

C. Regulations. The appropriate regulations and accompanying guidance for conducting extended over-water operations under FAR Part 121 are as follows:

(1) FAR § 121.351(a) states that no person may conduct an extended over-water operation unless the airplane is equipped with the radio equipment necessary to comply with FAR § 121.349 and an independent system that complies with FAR § 121.347(a)(1).

(2) FAR § 121.349 requires all of the equipment required in FAR § 121.347(a) to be installed. In addition, the radio equipment must be able to satisfactorily receive all radio navigational facilities to be used by either of two independent systems.

(3) FAR § 121.347(a)(1) requires the radio equipment necessary for the crew to communicate with at least one appropriate ground station from any point en route.

(4) FAR § 121.347(a)(2) requires the radio equipment necessary for the crew to communicate with appropriate air traffic control (ATC) from any point in the control zone within which flights are intended.

(5) FAR § 121.347(a)(3) requires the radio equipment necessary for the crew to receive meteorological information from any point en route by either of two independent systems, and further states that one of the means provided to comply with this subparagraph may also be used to comply with subparagraphs (a)(1) and (2) of FAR § 121.347.

D. Applicable FAR Part 121 Guidance. To ensure adequate communication with ground stations, FAR § 121.351 requires FAR Part 121 operators engaged in extended over-water operations to have all aircraft equipped with two independent communication systems. Each of these independent communication systems must be capable of communicating with at least one appropriate ground station from any point on the route.

(1) If this requirement can be complied with on all over-water routes by using VHF equipment, the airplane need only be equipped with two VHF receivers and two VHF transmitters.

(2) On the other hand, if compliance with FAR § 121.347(a)(1) can only be accomplished with HF equipment, the airplane must be equipped with two HF systems and at least one VHF system to also comply with FAR § 121.347(a)(2).

NOTE: Principal operations inspectors (POI) should be aware that Exemption No. 2081, as amended, grants relief from FAR § 121.99 by authorizing FAR Part 121 operators to dis-

patch airplanes over certain ocean areas with one of the two required HF radios inoperative at the time of departure, subject to certain conditions and limitations.

(3) The term "appropriate ground station" in FAR § 121.347(a)(1) includes, for example, aeronautical radio stations for ATC en route and air carrier dispatcher and flight-following services. Where there are gaps in air-ground communication capabilities that require the use of both VHF and HF systems en route to comply with FAR § 121.347(a)(1), there must be two VHF and two HF systems to comply with the requirement of FAR § 121.351.

E. FAR Part 135 Guidance. FAR § 135.165 prohibits operators from flying under IFR or on extended over-water operations unless the aircraft is equipped with certain communication and navigation equipment. Guidance for FAR Part 135 operators regarding this equipment is specified in FAR § 135.165 as follows:

(1) Turbojet Airplanes with 10 or More Passenger Seats and Multiengine Commuter Airplanes. FAR § 135.165(a) pertains to turbojet airplanes with a passenger seating configuration of 10 or more and to multiengine airplanes carrying passengers as a commuter air carrier. FAR § 135.165(a) requires, in part, for IFR or for extended over-water operations, that those airplanes have radio communications equipment appropriate to the facilities to be used and that the equipment be capable of transmitting to, and receiving from, at least one ground facility at any place on the route. It also requires, in part, that two "independent" transmitters and two "independent" receivers for communication be used. For the purpose of this section, a receiver or transmitter is "independent" if it does not depend on the functioning of any part of another receiver or transmitter.

(2) Other Aircraft. FAR § 135.165(b) pertains to all other aircraft and requires, in part, only one transmitter and two independent receivers for communications under IFR or during extended over-water operations.

(3) Use of an Additional Transmitter. FAR § 135.165(b)(7) also requires that an additional communications transmitter be used for extended over-water operations. This would mean that if an HF radio is required to communicate with ATC over any part of an extended over-water route, the aircraft will be required to be equipped with two HF independent transmitters and two independent HF receivers.

F. FAR Parts 121 and 135 Operations Ferrying Aircraft Under FAR Part 91. FAR § 91.511 requires those FAR Part 121 and 135 operators who ferry aircraft under FAR Part 91 to carry certain operable communications equipment on large and turbine-powered, multiengine airplanes when they are flown over water. For example, when both VHF and HF communications equipment are required for the intended route under FAR § 91.511, FAR § 91.511(d) allows the FAR Part 91 operator to conduct over-water operations with only one HF transmitter and one HF receiver, provided the aircraft is equipped with two independent VHF transmitters and receivers.

181. DATA LINK. (TBD)

183. AUTOMATIC DEPENDENT SURVEILLANCE. (TBD)

185. SATELLITE VOICE. (TBD)

186.–400. RESERVED.

[PAGES 4-83 THROUGH 4-120 RESERVED]

- A position from which a landing can be made visually
- A position from which a missed approach can be executed and completed if external visual references necessary to complete the landing are not established before passing DH or MDA/MAP

B. An instrument approach and its operating minimums are usually prescribed and approved for a specific airport and/or runway by the aviation authority that has jurisdiction over flight operations at that airport. The FAA is responsible for developing all civil IAP's and for specifying the operating minimums for all IAP's in the U.S., its territories, and the U.S. Army IAP's worldwide. In the case of other military IAP's, an instrument approach and its operating minimums are prescribed and approved for a specific airport and/or runway by the authority having jurisdiction over flight operations. There are various types of IAP's that are or may be approved for use by U.S. air carriers. These types of IAP's include the following:

- IAP's published in accordance with FAR Part 97
- IAP's authorized in operations specifications
- FAA-approved special IAP's (FAA Form 8260-7, "Special Instrument Approach Procedure")
- Department of Defense (DOD) IAP's at U.S. military airports
- IAP's published by a foreign country
- IAP's developed by an air carrier in a foreign country in accordance with FAA Order 8260.31, "Foreign Terminal Instrument Procedures"

455. U.S. STANDARD INSTRUMENT APPROACH PROCEDURES (SIAP). SIAP that are approved for all users of the U.S. National Airspace System (NAS) are published in accordance with FAR Part 97 and are incorporated in the operations specifications by reference. Even though CVFP are available for public use by aircraft on IFR flight plans, they are not instrument flight procedures. Except for CVFP's, it may be assumed that any SIAP charted in a National Oceanic Service (NOS) flight information publication is appropriately published in FAR Part 97.

457. OTHER INSTRUMENT APPROACH PROCEDURES (IAP). If an IAP is published in accordance with FAR Part 97 and is based on International Civil Aviation Organization (ICAO) standard NAVAID's, it is available for all users of the U.S. NAS. If, however, an IAP and its operating minimums are not published in accordance with FAR Part 97, other means have been established to authorize their use. In such cases, IAP is incorporated in operations specifications by reference (either with or without additional restrictions). This group of instrument procedures not published in Part 97, includes IAP's developed by certain U.S. military organizations, foreign governments, air carriers, and IAP's based on nonstandard NAVAID's such as TACAN, TALAR, airborne radar, or commercial broadcast stations. Many of these approach procedures are not available to all users due to the special training, knowledge, or equipment required to safely conduct them.

A. U.S. Military IAP's. U.S. military IAP's are approved by the local base commander and published by the DOD. Since these procedures comply with U.S. terminal instrument procedures (TERPS) criteria, U.S. military IAP's must be used by air carriers when operating at military airports, unless the procedure is noted "Not For Civil Use" by the military. IAP's published by the DOD for U.S. military airports are incorporated in the operations specifications by reference.

B. Foreign Government IAP's. IAP's and their operating minimums at foreign airports are established by the foreign authority having jurisdiction over flight operations at the airport. In general, the IAP's and operating minimums (if specified) at most foreign airports are developed in accordance with U.S. TERPS or ICAO procedures for air navigation services aircraft operations (PANS-OPS) criteria. IAP's developed by foreign authorities using TERPS or PANS-OPS are approved for use by U.S. air carriers in accordance with FAA Order 8260.31 and are incorporated in the operations specifications by reference. In some cases it may be necessary to restrict certain foreign IAP's to make them equivalent to U.S. or ICAO criteria. FAA Order 8260.31 provides direction and guidance for restricting such foreign IAP's. When a restriction to a foreign IAP is required, it must be specified in paragraph C58 of the operations specifications.

C. IAP's Developed By An Air Carrier. At some foreign airports, an air carrier may need to develop or choose to develop an IAP. The operations specifications enable an air carrier to exercise this option, provided the developed procedure meets either U.S. TERPS or ICAO PANS-OPS criteria. In such cases, the IAP developed by the air carrier may be authorized for use by listing it in paragraph C64 of the operations specifications, provided the air carrier submits appropriate supporting information in accordance with FAA Order 8260.31. These procedures may be based on either public or private NAVAID's.

D. Non-Federal NAVAID's. Non-federal NAVAID's can be used for public and special IAP's. Approval for the use of these NAVAID's within the NAS is established in FAA Order 6700.14, "Ground Certification of Non-FAA Federally Owned (Non-Military) Navigational Aids," and FAR Part 171. An inspector should become familiar with these documents before issuing approval to use these IAP's. Approval to use these IAP's is accomplished by listing them in paragraph C64 of the operations specifications.

E. Commercial Broadcast Station IAP's. In the past, limited authorizations to use commercial broadcast stations have been granted in unique situations. The need for these procedures has been steadily declining because of the increased availability of standard NAVAID's. In general, new approach procedures based on commercial broadcast stations will not be approved. In any case, AFS-400 review and concurrence must be obtained before an inspector may approve an IAP based on commercial broadcast stations.

F. Special IAP's. Special IAP's are those procedures developed by the FAA but not published in accordance with FAR Part 97. These special IAP's are not approved for general use due to the special training, procedures, knowledge, and/or equipment required to safely conduct them. Due to these special requirements, the use of special IAP's must be authorized on an operator-by-operator basis. Special IAP's are issued on FAA Form 8260-7 and authorized in paragraph C64 of the operations specifications.

G. IAP's Outside of Controlled Airspace. Since ATC separation services are an important element of safe instrument approach operations, special consideration and evaluation is required before operations can be authorized outside of controlled airspace (no ATC separation services available). This situation occurs when conducting an IAP at an airport that does not have an operating control tower or when a control zone is not active. The airports at which portions of IAP's are outside of controlled airspace must be authorized by paragraph C64 of the operations specifications.

459. SPECIAL APPROACH AND LANDING OPERATIONS. U.S. TERPS contains the established minimum criteria for standard IAP's within the U.S. NAS. PANS-OPS, volume II contains the established minimum criteria for IAP's in most foreign countries. These criteria allow for safe instrument approach and landing capabilities for aircraft equipped with ICAO standard NAVAID's (ILS, MLS, VOR, VOR/DME, NDB). Many operators have chosen to use airborne equipment exceeding the minimum capabilities required for instrument flight. A means of granting operational credit for using equipment with these increased capabilities has been established. The operations specifications provide the method to approve approach and landing operations using such airborne equipment. Examples of airborne equipment with increased capabilities include automatic landing systems (autoland), manually flown electronic landing systems (HUD), area navigation systems (RNAV), Loran-C systems, and airborne radar approach systems (ARA). The following subparagraphs briefly discuss these systems.

A. Autoland.

(1) General. Many large transport category airplanes are equipped with autoland systems, and a few helicopters are equipped with automatic deceleration and hover systems. As technology evolves, the trend of using autoland systems is increasing. Autoland systems are already standard features on many new airplanes. An air carrier, however, is not authorized to use autoland systems to touch down in FAR Parts 121 and 135 operations unless the particular flight control guidance system is authorized for autoland by the operations specifications. FAR § 121.579 and FAR § 135.93 prohibit the use of most autopilots below certain heights (50 feet or greater) during approach and landing operations, even during VFR weather conditions. The intent of these rules is to provide pilots with the terrain or obstacle clearance and reaction time necessary to safely intervene if the autopilot malfunctions. This is especially critical if the autopilot abruptly commands a hard-over, nose-down condition. Many autopilots ("single-channel" autopilots) used in FAR Parts 121 and 135 operations are not designed to provide the redundancy necessary to automatically detect all failure combinations. If such failures occur, the pilot must intervene, disconnect the autopilot, and recover manually. Since an aircraft will lose altitude if a hard-over, nose-down condition occurs, the autopilot must be routinely disengaged before descending below the height above terrain specified by FAR § 121.579 or § 135.93, as appropriate. Failure to disconnect the autopilot before descending below these heights could lead to ground contact during a recovery attempt if a malfunction should occur. Many aircraft are now equipped, however, with an automatic flight control guidance system designed to provide the performance, redundancy, and reliability necessary to detect all significant failure combinations and to prevent the autopilot from failing in a hard-over, nose-down condition (zero height loss). With these aircraft and equipment combinations, the safety objective of FAR § 121.579 and § 135.93 can be met even if the system is used to touchdown. "Fail-passive" and "fail-operational" automatic landing

systems provide this capability and can be approved for use to touchdown. The operator's approved training curriculum must include training on autoland operations, and the autoland equipment must be properly certificated and maintained. POI's shall authorize the use of autoland to touch down by issuing paragraph C61 of the operations specifications, "Flight Control Guidance Systems for Automatic Landing Operations Other Than Categories II and III," in accordance with FAA Order 8400.10 and FAR § 121.579(c) or § 135.93(d).

(2) Use of Autoland to Meet Recency of Experience Requirements for Landings Required by FAR § 121.439. Paragraph C61 of the operations specifications, dated January 11, 1988, states that the certificate holder is authorized to conduct automatic approach and landing operations (other than CAT II and III) at suitably equipped airports. The certificate holder shall conduct all automatic approach and landing operations in accordance with the provisions of this paragraph. POI's shall observe and adhere to the following direction and guidance involving the granting of landing credit for the use of autoland to meet recency requirements:

(a) Restriction. Only one autoland may be used toward satisfying the three landing currency requirements.

(b) Credit for Autoland. Credit for one landing each may go to both the pilot-in-command (PIC) and to the second-in-command (SIC).

(c) Definitions. For the purposes of this paragraph, the following definitions are applicable:

1. Autoland Approach: An autoland approach is a precision instrument approach to touchdown, and in some cases, through the landing rollout. An autoland approach is performed by the aircraft autopilot, which is receiving position information and/or steering commands from onboard navigation equipment. Autoland approaches are flown in VFR and IFR. It is common for operators to require their aircrews to fly coupled approaches and autoland approaches (if certified) when the weather conditions are less than approximately 4,000 feet RVR.

2. Automatic Landing Systems: An example of modern airborne equipment, the autoland is often standard on many new airplanes. This modern system gives the aircrew increased capabilities by enabling them to make safer instrument approaches and landings than those being done without the autoland. Autoland also refers to the landing that is accomplished with the autoland when activated during an IFR landing. The aircrew is required to constantly monitor this system to ensure safe operation of the aircraft.

B. Manually Flown Flight Control Guidance Systems Certificated For Landing Operations. Historically, pilots have not had flight director systems and other instrument information that enabled safe manual control of an aircraft to touchdown in instrument conditions. The recent development of flight control guidance systems such as HUD provides the pilot with instrument information in a manner that enables safe manual control of the aircraft through touchdown and rollout. The flight guidance provided by these systems enables a pilot to duplicate the performance and functions of an autoland system. Although the provisions of FAR §§ 121.579 and 135.93 do not specifically address use of manually flown flight control guidance systems, the safety objective of these rules is clearly applicable to their use. These systems provide flight guidance information equivalent to the performance, redundancy, reliability, and the hard-over, nose-down protection provided by autoland systems that are approved for use to touchdown. Manually flown flight control guidance systems certified for landing operations can be approved for use to touchdown. The operator's approved training curriculums must include training on such manually flown operations, and the equipment must be properly certificated and maintained. Use of these manually flown systems to touchdown can be authorized by the issuance of paragraph C62 of the operations specifications in accordance with this handbook.

C. Area Navigation Systems. IAP's based on RNAV's are not published in FAR Part 97. Within the U.S., these approaches are special IAP's developed for special use and issued on FAA Form 8260-7. An RNAV IAP may be developed and used by an air carrier, provided supporting information is submitted to the FAA. Since criteria for RNAV IAP's have not been established in ICAO PANS-OPS, all foreign RNAV IAP's must be developed in accordance with U.S. criteria. The use of RNAV systems to conduct IAP's can be authorized by issuing paragraph C63 of the operations specifications. RNAV IAP's are special IAP's; therefore, each RNAV IAP approved for a particular air carrier must be listed in paragraph C64 of the operations specifications.

D. Airborne Radar Approaches. ARA's are based on the use of airborne radar. Within the U.S, ARA's are classified as special IAP's and are established by the issuance of FAA Form 8260-7. Use of ARA's can be authorized through operations specifications, if the criteria in Advisory Circular (AC) 90-80, "Approval of Airborne Radar Approach (ARA)

Procedures for Helicopters to Offshore Platforms," as amended, and this handbook are met.

E. Offshore Approach Procedures (OSAP). OSAP's are based on the use of Loran-C and the airborne radar systems. OSAP's are established and approved in accordance with the criteria in AC 90-80. The use of OSAP's can be authorized by operations specifications.

460.–470. RESERVED.

[PAGES 4-141 THROUGH 4-144 RESERVED]

CHAPTER 2. ALL-WEATHER TERMINAL AREA OPERATIONS

SECTION 3. FACTORS AFFECTING ALL-WEATHER TERMINAL AREA OPERATIONS

471. GENERAL FACTORS AFFECTING OPERATING MINIMUMS. The external visual references necessary for controlling an aircraft solely by visual means are not available throughout an instrument approach and landing operation in instrument conditions. Therefore, the pilot must control the aircraft along the desired flightpath by reference to instruments, or by reference to a combination of instrument and external visual information. In all-weather operations, the desired level of safety is achieved through the use of special equipment, special training, instrument flight procedures, and associated operating minimums. These factors ensure that the combination of information (available from external sources and airborne instruments and equipment) is sufficient to enable an aircraft to be safely operated along the desired flightpath, provided weather conditions are at or above the operating minimum. As external visual information decreases due to restricted seeing-conditions, the quality and quantity of information from instrument and other equipment sources and the proficiency of the flightcrew must increase. For approach and landing operations, the specific considerations involved when determining operating minimums are related to the following factors:

- Precision with which the aircraft can be controlled along the desired approach path using the guidance provided by navigational aids (NAVAID) through reference to aircraft instrumentation and use of airborne equipment
- Flight characteristics of the aircraft
- Physical characteristics of the aircraft
- Character of the ground environment and obstructions
- Flightcrew proficiency
- Extent to which external visual information must be used to control the aircraft
- Interaction of these factors to provide satisfactory total system performance

473. PRECISION OF FLIGHTPATH CONTROL. The precision of flightpath control is dependent upon at least the following factors:

- Accuracy and integrity of the "signals-in-space" radiated by NAVAID's (accuracy and integrity of NAVAID's)
- Accuracy of airborne equipment in detecting the "signals-in-space" and in providing instrument information to the pilots or autopilot (accuracy of airborne equipment)
- Precision with which the pilot or autopilot maintains the selected flightpath in varying environmental conditions (flight technical error)

475. OBSTACLE CLEARANCE. Obstacle clearance is achieved by the pilot seeing and avoiding the obstacles, by the pilot's use of instrument information, and/or through instrument procedure design. It is not always practical to design an instrument procedure that permits instrument information to be used for avoiding obstacles. In these situations, operating minimums are established which ensure that the flightcrew will have sufficient seeing-conditions to identify obstacles and safely maneuver to landing using external visual references. Accuracy of the guidance and control systems, and the pilot's proficiency, determine the size of the area in which obstacle clearance must be considered. The more precise a total system is, the smaller the area in which obstacles must be considered (fewer obstacles) and usually lower operating minimums can be established. When obstacles are not limiting, the height to which an approach can be conducted without establishing external visual reference is limited by performance of the total system. Generally, lower operating minimums are achieved by increasing precision, reliability, and integrity of the total system (both airborne and ground based).

477. FUNCTION OF EXTERNAL VISUAL REFERENCES. Except for certain Category (CAT) III operations, external visual information is essential for a pilot to safely take off or to complete an instrument approach and landing. This external visual information (visual cues) is necessary for a pilot when assessing the three-dimensional position of the aircraft, its velocity, and its acceleration or deceleration in relation to the intended landing or takeoff surface. This information is essential for a pilot when

manually maneuvering (or when evaluating the autopilot's performance in maneuvering) the aircraft into alignment with the centerline of a landing or takeoff surface. External visual references are essential for a pilot to safely touch down (decelerate to air-taxi/hover for rotorcraft) within the touchdown zone (TDZ) and for maintaining directional control so as to stop on the runway (maintain directional control and avoid obstacles while air taxiing for rotorcraft). In degraded seeing-conditions, the quality of external visual information can be significantly improved by use of visual aids, such as runway markings and lighting. Such visual aids are necessary to increase the conspicuousness of the landing or takeoff surface. These aids provide pilots with the necessary visual references during takeoff, the final stages of approach and landing, and ground movement. The importance of visual aids increases as seeing-conditions decrease.

A. Approach lighting, TDZ lighting, runway centerline lighting, runway edge lighting, and runway markings, provide visual references to pilots for assessing lateral position and crosstrack velocity or acceleration.

B. Approach lighting, threshold lighting, in-runway lighting, and runway markings, provide visual roll references during landing, takeoff, rotation, and initial climb.

C. TDZ lighting and runway markings indicate the plane of a landing surface and identify the touchdown area, thereby providing a vertical and longitudinal reference. These visual aids provide necessary visual information for a pilot to determine vertical position, sink rate, and vertical acceleration or deceleration.

D. The visual guidance information from in-runway lights and/or markings must be sufficient to ensure adequate alignment and directional control information during takeoff or during final stages of landing and deceleration.

E. Reference to external visual aids is a primary requirement for controlling the aircraft's flightpath when operating below the minimum altitude (height) published for instrument flight.

479. MAXIMUM SINK RATES.

A. Perceptual Limitations. Restricted seeing-conditions significantly affect a pilot's ability to visually detect or perceive vertical height, sink rate (vertical velocity), and vertical acceleration. As seeing-conditions decrease, the pilot's ability to perceive vertical height, sink rate, and vertical acceleration degrades faster than the ability to perceive lateral errors and lateral accelerations (see discussion of visual illusions in paragraph 509). Personnel establishing operating minimums must consider these human perceptual limitations.

B. Aircraft Structural Limitations. According to structural design criteria, the aircraft structure must tolerate touchdown sink rates (vertical velocity) of at least 10 feet per second (fps) (600 feet per minute (fpm)). Touchdown sink rates higher than the maximum rates evaluated during the certification of an aircraft can cause serious structural damage including catastrophic failure. Therefore, instrument procedure design must provide for sink rates that give a pilot the capability of detecting unacceptable situations and adjusting the flightpath to achieve a safe landing considering available visual aids and operating minimums. Visual aids and operating minimums must provide a high probability that a pilot will be able to adequately control the aircraft and adjust the vertical flightpath to achieve acceptable sink rates at touchdown and touchdown within the TDZ.

C. Maximum Acceptable Sink Rates. Operational experience and research has shown that a sink rate of greater than approximately 1,000 fpm (16.67 fps) is unacceptable during the final stages of an approach (below 1,000 feet above ground level (AGL)). This is due to a human perceptual limitation which is independent of the type of airplane operated and is equally applicable to helicopters. Therefore, the instrument approach procedures and the operational practices and techniques must ensure that sink rates greater than 1,000 fpm are not required or permitted in either the instrument or visual portions of an approach and landing operation. Operating minimums and available visual aids must provide reasonable assurance that a pilot will have adequate external visual references in the visual portions of all instrument flight procedures (certain CAT III operations excepted). To be considered adequate, these external visual references must permit a pilot to adequately perceive sink rates and manually maneuver the aircraft (or evaluate autopilot performance) to achieve an acceptable touchdown sink rate and touchdown point, considering the operating minimums and the available visual aids.

481. COCKPIT DESIGN. Physical design of an aircraft cockpit has a significant impact on seeing-conditions during takeoff and the final stages of an instrument approach and landing. Cockpit design has a direct effect on a pilot's ability to determine the three-dimensional position of an aircraft in relation to a landing or takeoff surface and, consequently, the ability to safely control the flightpath of the aircraft. Therefore, cockpit design is a significant factor in establishing operating minimums of a particular air-

craft (see discussion in paragraph 503). Generally, aircraft with larger cockpit-cutoff-angles (better downward viewing angles over the nose) and shallower landing pitch attitudes provide for better seeing-conditions. Improved seeing-conditions derived from improved cockpit design can be used to justify lower operating minimums. For example, the entire portion of the fuselage forward of the Concorde cockpit is tilted downward for landing to compensate for the very high pitch attitude in the landing configuration. This Concorde design feature maintains seeing-conditions necessary for the lower operating minimums.

483. MINIMUM INSTRUMENT FLIGHT ALTITUDES. Except for certain CAT III operations, all instrument approach and landing operations have limitations related to obstacles, airborne instrumentation and equipment, ground-based navigation equipment, and/or visual aids. Because of these limitations, external visual information is required to safely complete instrument approaches and landings. Airborne instruments and equipment and the signals-in-space radiated by ground-based NAVAID's must provide pilots adequate guidance to safely control an aircraft by reference solely to instruments until the aircraft arrives at a pre-established minimum height or altitude (decision height (DH) or minimum descent altitude (MDA)) for instrument flight. The total system (airborne and ground-based) does not provide this capability below the minimum height or altitude for instrument flight. Therefore, descent below the specified minimum height or altitude for instrument flight can only be safely accomplished when adequate external visual references are available. If adequate external visual references are not established, a pilot must execute an instrument missed approach at or before passing a preestablished missed approach point (MAP).

NOTE: Descent below the specified minimum instrument flight rules (IFR) altitude without adequate visual reference to control and maneuver the aircraft to a landing is unsafe and prohibited. The minimum height or altitude for instrument flight for an instrument approach and landing is specified in various ways depending on the type and category of instrument approach conducted.

A. Nonprecision Approaches. The minimum heights or altitudes for nonprecision approaches can be specified as an MDA, height above touchdown (HAT), height above airport (HAA), minimum descent height (MDH), obstacle clearance altitude (OCA), obstacle clearance height (OCH), or obstacle clearance limit (OCL). MDA, HAT, and HAA are used by the United States (U.S.) and certain foreign countries who use U.S. Terminal Instrument Procedures (TERPS) criteria. OCA, OCH, and OCL are used in most foreign countries and are established in accordance with International Civil Aviation Organization (ICAO) Procedures for Air Navigation Services Aircraft Operations (PANS-OPS). Although the current version of ICAO PANS-OPS eliminated use of OCL, some countries still use OCL criteria from previous versions of PANS-OPS. Some countries, in addition to OCA and OCH, provide MDA and MDH. MDA and OCA are barometric flight altitudes referenced to mean sea level (MSL). HAT, HAA, MDH, OCH, and OCL are radio or radar altitudes referenced to either the elevation of the airport, the elevation of the TDZ, or the elevation of the landing threshold.

(1) MDA or OCA may be specified for any nonprecision approach procedure.

(2) HAT, MDH, OCH, or OCL may be specified for straight-in, nonprecision approach procedures.

(3) HAA, MDH, OCH, or OCL may be specified for circling maneuvers.

B. Precision Approaches. The minimum height or altitude for instrument flight for precision approaches can be specified as a decision altitude (DA), OCA, DH, OCH, or OCL. In the U.S. and certain foreign countries that use U.S. TERPS criteria, the minimum instrument flight altitude for precision approaches is DH. DH is specified as a decision altitude referenced to MSL for aircraft equipped with only barometric altimeters and as HAT for aircraft equipped with radio or radar altimeters. Within the U.S., both means of specifying this height or altitude are commonly referred to as DH. DA, DH, OCH, and OCL are used in most foreign countries and are established in accordance with various versions of ICAO PANS-OPS. DA and OCA are referenced to a barometric altitude (MSL). DH (in most countries), OCH, and OCL are referenced to a radio or radar height above either the elevation of the airport, the elevation of the TDZ, or the elevation of the landing threshold.

C. Lowest Permissible Height or Altitude for Instrument Flight. The lowest permissible height or altitude for instrument flight for any precision or nonprecision approach cannot be lower than any of the following:

- Minimum height specified by the Federal Aviation Administration (FAA)-approved airplane flight manual (AFM)
- Minimum height or altitude for which the signals from ground-based or space-based navigation equipment can be relied upon for instrument flight
- Minimum height or altitude that provides adequate obstacle clearance

- Minimum height or altitude authorized for the flightcrew
- Minimum height or altitude authorized for the operator for that aircraft and equipment combination
- Minimum height or altitude permitted by the operative airborne and ground-based or space-based equipment
- Minimum height or altitude published or otherwise established for the instrument approach
- Minimum height or altitude authorized in operations specifications for the operation being conducted

485. MINIMUM VISIBILITY, RUNWAY VISIBILITY VALUES, AND/OR RUNWAY VISUAL RANGE. Upon arrival at the minimum height or altitude for instrument flight and before passing a pre-established decision point, a pilot must establish adequate seeing-conditions to safely complete the approach and landing. Operating minimums are expressed as visibility (VIS), runway visibility values (RVV), or runway visual range (RVR). Criteria for establishing operating minimums must provide a reasonable assurance that a pilot can establish the required seeing-conditions before passing the decision point. This criteria provides this assurance if the weather conditions are reported to be at or above the landing minimum when the approach is initiated. To achieve this objective, the operating minimums specified for the procedure (VIS, RVV, RVR) must be compatible with the minimum height or altitude for instrument flight and the decision point specified for the procedure. Therefore, when the reported weather conditions are at the authorized minimums, a pilot should be able to establish external visual references upon arrival at the minimum height or altitude (DH or MDA), and before passing the decision point (DH, MAP, or visual descent point (VDP)). At this point a pilot must be able, by external visual reference, to maneuver to a landing without exceeding a descent rate of 1,000 fpm or exceeding aircraft limitations on touchdown. (See paragraph 497 for a discussion of factors affecting seeing-conditions.) For example, it would not be practical to specify a DH of 200 feet (HAT 200) with an operating minimum of RVR 700 since the first visual contact in a typical aircraft would not occur until approximately 130 feet above the elevation of the TDZ. The specified operating minimum must also permit adequate external visual references to be established early enough for a normal descent to landing (less than 1,000 fpm). For example, it would not be reasonable to specify an MDA equivalent to a HAT of 400 feet and an operating minimum of RVR 1600 for typical turbojet airplanes. In this situation, the pilot would not establish first visual contact until the airplane is within 4,000 feet of the landing threshold and would require a descent rate much higher than 1,000 fpm to land within the TDZ.

487. SAFETY DURING GO-AROUNDS. Most aircraft used in air transportation have the capability, in a normal approach and landing configuration, of safely executing a go-around from any point before touchdown, even when significant failures occur, such as engine, hydraulic, or autopilot failures. This aircraft performance capability for safety in go-arounds should be provided for, particularly for go-arounds caused by operational factors, such as airborne and ground-based equipment failures, air traffic control (ATC) contingencies, loss of external visual references, and misalignment with the landing surface. This capability is required in all CAT II and CAT III operations. When establishing operating minimums for aircraft that do not have this capability, the consequences of the failures that would preclude a safe go-around must be considered. Operating minimums for aircraft without the performance capability to safely go-around following engine failure must provide adequate seeing-conditions to successfully accomplish a forced landing in a pre-established location. The following factors must be considered when evaluating the safety of go-arounds from any point in the approach before touchdown:

A. The go-around capability is based on normal operating conditions at the lowest authorized operating minimum. Factors related to geometric limitations of the aircraft during the transition to a go-around (such as tail strike, or rotor strike) must be considered. Other factors such as the available visual cues, autopilot or flight director mode switching, altitude loss in transition to go-around, and altitude loss due to autopilot malfunction must also be considered.

B. If a go-around could result in an inadvertent touchdown, the safety of such an event must be considered. The aircraft design and/or procedures used must accommodate for relevant factors. Examples of relevant factors that must be considered include operation of engines, the operation of autothrottle, autobrakes, autospoilers, autopilot mode switching, and other systems that could be adversely affected by an inadvertent touchdown.

C. If the occurrence of any failure condition in the aircraft or its associated equipment could preclude a safe go-around from low altitude, then these failure conditions must be clearly identified. In these cases, a minimum height must be specified from which a safe go-around can be initiated if the failure occurs. If the failure occurs below the specified height, pilots

must be made aware of the effects or consequences of any attempt to go-around.

D. Information must be provided to the flightcrew concerning appropriate procedures for low altitude go-arounds and the height loss expected. If the conduct of certain approach and landing operations is authorized with an engine-out, height loss information for engine-out operations must also be provided to the flightcrew.

489. CONCEPT OF DECISION HEIGHT. The DH concept is the foundation for current precision CAT I and CAT II approach and landing operations. It is also an essential concept in certain CAT III operations. This concept evolved after the introduction of turbojets in 1958. It was established to resolve problems created by use of a ceiling as an element of operating minimums, especially during rapidly changing weather conditions. The use of the DH concept also enhances safety of operations in degraded seeing-conditions. A DH is established to require that the pilot, before passing the specified height, decide whether adequate visual references are available for accomplishing the following actions:

- Verifying that the aircraft is in a position that will permit a safe landing in the TDZ
- Determining that sufficient external visual references are available to manually maneuver the aircraft (or assess autopilot maneuvering in CAT II and III operations) into alignment with the runway centerline
- Determining that the aircraft can be maneuvered to touchdown within the TDZ, that directional control can be maintained on the runway, and that the aircraft can be stopped within the available runway length
- For helicopter operations, determining that sufficient visual references are available to maneuver the helicopter to align with the landing area; decelerate to air taxi, or hover; and maintain directional control while air taxiing

A. From an operational viewpoint, DH is the limit to which a pilot can descend before having to decide to continue the approach by visual means. If the visual references required to safely continue the approach have not been established before passing DH, a missed approach must be executed at DH. This does not mean that a pilot waits until arriving at DH before deciding to go-around or to continue the approach based on visual references. The decision-making process begins when the approach is initiated and continues throughout the approach. A pilot must continually evaluate course and glidepath displacement information throughout the approach. Knowing that significant changes cannot occur instantaneously, a pilot begins to formulate a decision concerning the probable success of the approach long before reaching DH. Although DH is a specified point in space at which a pilot must make an operational decision, the pilot accumulates the information required to make that decision throughout the approach. It is incorrect to assume that all aspects of the decision-making process are delayed until the critical instant the aircraft arrives at DH. The visual cues that become available during the descent to DH enhance the pilot's formulation of the decision that must be made at DH. The operational decision to continue the approach by visual means, however, must be made before passing DH. At DH, if a pilot is satisfied that the total pattern of the visual cues provides sufficient guidance and the aircraft is in a position and tracking so as to remain within a position from which a safe landing can be made, a decision to continue the approach by reference to visual cues is appropriate. However, if a pilot is not satisfied that all of these conditions exist, a missed approach must be executed.

B. The decision that the pilot must make before passing DH is not a commitment to land. It is a decision to continue the approach based on visual cues. This distinction is important since the possibility exists that, after passing DH, visual cues may become inadequate to safely complete the landing, or the aircraft may deviate from the flightpath to a point where a safe landing cannot be assured. Since many variables are involved, the final decision to commit to a landing is the pilot-in-command's (PIC) and is primarily a judgment based on all the relevant operational factors. The PIC should usually delay the decision to commit to a landing until the final stages of flare and landing.

C. The following is a list of statements that describe what DH is:

(1) DH is a specified decision point.

(2) DH is the point at which a specific action must be initiated (either the approach is continued by reference to visual aids or the approach is terminated with a go-around).

(3) DH is the lowest permissible height to which a precision approach can be continued by reference to flight instruments alone.

(4) DH is the limit to which a pilot can descend before having to decide to continue the approach using external visual references.

D. The following is a list of statements which describe what DH is not:

(1) DH is not a point where a decision or commitment to land is made.

(2) DH is not a point where the decision-making process begins.

(3) DH is not the latest point at which a go-around could or should be made.

(4) DH is not a point where all aspects of the decision are instantaneously formulated.

491. CONCEPT OF MINIMUM DESCENT ALTITUDE AND MISSED APPROACH POINT (MDA/MAP). The MDA/MAP concept is the foundation for safe, CAT I nonprecision approach operations. Electronic glidepath information cannot be provided at certain locations because of obstacle or terrain problems, NAVAID sighting problems, and cost benefit factors. The MDA/MAP concept provides for safe nonprecision approach operations in instrument conditions without electronic glidepath information.

A. Minimum Descent Altitude. An MDA is the lowest permissible height (in a nonprecision approach) at which an aircraft can be controlled by reference only to instrument information. After passing the final approach fix (FAF) a pilot should descend to the MDA as rapidly as practical so that the pilot can acquire sufficient visual references while still in a position to safely complete the approach and landing by visual means. An MDA is established to require that the pilot, before descending below the specified height and before passing the MAP, determine that adequate visual references are available for accomplishing the following actions:

- Verifying that the aircraft is in a position that will permit a safe landing in the TDZ
- Determining that sufficient visual references are available to manually maneuver the aircraft to align it with the runway centerline, touch down within the TDZ, and maintain directional control on the runway
- For helicopter operations, determining that sufficient visual references are available to maneuver the helicopter to align with the landing area; decelerate to air taxi, or hover; and maintain directional control while air taxiing

(1) The following is a list of statements that describe what MDA is:

(a) MDA is the lowest permissible height at which a nonprecision approach can be continued by reference solely to flight instruments.

(b) MDA is the limit to which a pilot can descend before having to decide whether or not to continue the approach by using external visual references.

(c) MDA is the minimum height above the surface to which the aircraft can descend, unless the pilot determines that the aircraft is in a position from which it can be safely maneuvered using normal rates of descent (less than 1,000 fpm) to a touchdown within the TDZ (decelerate to air taxi or hover for helicopters).

(2) The following is a list of statements that describe what MDA is not:

(a) MDA is not a specified decision point.

(b) MDA is not a point at which a specific action is initiated.

(c) MDA is not a point where the decision process begins.

(d) MDA is not the latest point at which a go-around could or should be made.

(e) MDA is not a point where all aspects of the decision are instantaneously formulated.

B. Missed Approach Point. Since an electronic glidepath is not used in a nonprecision approach, it is necessary to define a point on or near the airport where a missed approach must be executed, if adequate external visual references for safely continuing the approach are not available. This point is specified as the MAP. An MAP is a three-dimensional airborne position where the MDA passes over a specified geographic fix (the MAP).

(1) The following is a list of statements that describe what MAP is:

(a) MAP is a specified decision point.

(b) MAP is the last point at which the approach can be continued by reference solely to flight instruments. After the MAP, the approach must be discontinued.

(c) MAP is the last point at which the published missed approach can be safely executed in instrument conditions.

(2) The following is a list of statements that describe what MAP is not:

(a) MAP is not the last point at which a pilot can decide to continue the approach by external visual references. Often, the MAP is located at a point where a pilot cannot safely descend and land if the MDA is maintained until arriving at the MAP (for example,

when the MAP is located over the very high frequency omnidirectional radio range (VOR) on the airport).

(b) MAP is not a point where a decision or commitment to land is made.

(c) MAP is not a point where the decision process is begun.

(d) MAP is not a point where all aspects of the decision are instantaneously formulated.

493. CONCEPT OF CIRCLING MANEUVERS. In many situations, instrument approach design criteria will not permit a "straight-in" approach to the landing runway. In these situations, a circling procedure is necessary to maneuver the aircraft to a landing on the intended runway. Circling maneuvers are usually necessary when there is an obstacle or terrain problem. Circling maneuvers are also required when a NAVAID is located in a position that precludes a straight-in approach to the intended landing runway. U.S. criteria require a circling maneuver if the inbound course is offset more than 30 degrees from the runway centerline. The circling maneuver can be initiated from either a precision or nonprecision instrument approach procedure and must be conducted entirely by external visual references. Electronic course or glidepath guidance cannot be used to perform a circling maneuver. A circling maneuver is not an instrument maneuver. Sufficient visual references for manually maneuvering the aircraft to a landing must be maintained throughout a circling maneuver. The pilot must keep the aircraft's position within the established maneuvering area while performing the circling maneuver. The circling MDA must be maintained until an aircraft (using normal maneuvers) is in a position from which a normal descent (less than 1,000 fpm) can be made to touchdown (decelerate to air taxi or hover for helicopters) within the TDZ. It is critical for pilots to understand that the published missed approach procedure may not provide adequate obstacle clearance, especially during the initial portion of a missed approach executed during a circling maneuver. The published missed approach is designed to provide obstacle clearance only when the missed approach is executed on the published final approach course at or above the MDA, and before passing the MAP. A published missed approach may not guarantee the necessary safety margin when a missed approach is executed past the MAP and/or below the MDA. The aircraft must remain within the established circling maneuvering area until the aircraft is at or above the MDA and established on the missed approach course. The following statements summarize the basic concepts of a circling maneuver:

A. A circling maneuver is a visual maneuver.

B. Sufficient visual references to manually maneuver the aircraft to a landing must be maintained throughout a circling maneuver.

C. The aircraft must be maintained at the MDA until it is at a position from which a safe landing can be made.

D. A missed approach must be executed when external visual references are lost or sufficient visual cues to manually maneuver the aircraft cannot be maintained.

E. The published missed approach procedure does not guarantee obstacle clearance during the initial phases of a missed approach, if initiated during a circling maneuver after descending below MDA or after MAP. Therefore, when a missed approach from a circling maneuver is executed, the direction of the initial turn must always be toward the airport to ensure obstacle clearance and to keep the aircraft within the maneuvering area until it is above MDA and can safely proceed on the missed approach course.

495. CONCEPT OF RUNWAY VISUAL RANGE. Operating minimums are specified in terms of ground visibility, tower visibility, RVV, and RVR. The RVR concept has evolved over a long period, and its use in the U.S. began in 1955. As operating minimums were reduced due to improvements in airborne and ground-based equipment, it became more likely that pilots would not see the full length of the runway upon arrival at the specified decision point. Positions established for taking visibility observations were often several miles from the approach end of many runways. This resulted in reported visibility values that frequently did not represent the seeing-conditions encountered during the final stages of approach and landing. This deficiency was particularly critical when rapidly changing weather conditions within the terminal area occurred. These factors generated a need for systems such as RVR which could rapidly and reliably provide reports of the seeing-conditions that a pilot could expect to encounter in the TDZ and along the runway.

A. RVR measurements are taken by a system of calibrated transmissometers and account for the effects of ambient background light and the runway light intensity. Transmissometer systems are strategically located to provide RVR measurement associated with one or more of the three basic portions of a runway: the TDZ portion, the mid runway (MID) portion, and the rollout (Rollout) portion.

(1) RVR is an instrumentally-derived value that reflects an artificially created seeing-condition on or near the portion of the runway associated with the RVR report. This artificially created seeing-condition

is achieved by using high intensity runway edge, TDZ, and centerline lights. These lights increase the conspicuousness of the landing surface and "reach out" to the pilot, thereby creating a seeing-condition that is significantly better than the reported ground visibility or tower visibility. For any particular fog density, RVR will be significantly greater than reported visibility because RVR is based on the use of high intensity lights. Since RVR is based on high intensity lights, an RVR report only has meaning when associated with the seeing-conditions on or near the portion of the runway where the report was obtained (TDZ, MID, or Rollout). An RVR report has no meaning unless a pilot is also seeing the high intensity lights on which the report is based.

(2) To properly apply operating minimums, it is important to understand RVR. The following is a list of statements that describe what RVR is:

(a) RVR is an instrumentally derived value.

(b) RVR is currently measured by transmissometers located approximately 400 feet from the runway centerline.

(c) RVR is related to the transmissivity (degree of opaqueness) of the atmosphere.

(d) RVR is an approximation of the distance a pilot should see when an aircraft is on, or slightly above, the portion of the runway associated with the report.

(e) RVR is calibrated by reference to runway lights and/or the contrast of objects.

(f) RVR is a value that varies with runway light setting.

(g) RVR is a value that only has meaning for the portions of the runway associated with the RVR report (TDZ, MID, or Rollout).

(3) The following is a list of statements that describe what RVR is not:

(a) RVR is not a measure of meteorological visibility.

(b) RVR is not a measure of surface visibility or tower visibility.

(c) RVR is not a measure of seeing-conditions on taxiways, ramps, or aprons.

(d) RVR is not a measure of seeing-conditions at or near MDA or DH.

(e) In the U.S., RVR is not measured or reported by a human observer.

(f) RVR is not "visibility."

FYI: RVR is a value that can be five to six times greater than ground or tower visibility at night and two to three times greater during daytime.

B. Concept of Controlling RVR. Controlling RVR means that RVR reports are used to determine operating minimums whenever operating minimums are specified in terms of RVR, and RVR reports are available for the runway being used. All CAT I operating minimums below 1/2 statute mile (RVR 2400) and all CAT II and III operating minimums are based on RVR. The use of visibility is prohibited because the reported visibility may not represent the seeing-conditions on the runway. All takeoff minimums below 1/4 statute mile visibility (RVR 1600 for airplanes and RVR 1200 for rotorcraft) are predicated on RVR, and use of visibility is prohibited. For example, if the takeoff minimum published for a particular operation is TDZ RVR 1200/Rollout RVR 1000, RVR reports are controlling and a takeoff is prohibited unless the TDZ RVR report is at or above RVR 1200 and the rollout RVR report is at or above RVR 1000. In this example, a takeoff cannot be based on visibility if the RVR system is operative, even if the reported visibility is greater than 1 statute mile.

497. GENERAL FACTORS AFFECTING SEEING CONDITIONS. Seeing conditions during all-weather terminal area operations are affected by numerous factors. These factors are related to aircraft design, weather conditions, ambient lighting level (day or night), airport environment, and available visual aids. Seeing conditions are also affected by operational factors, such as aircraft configuration, speed, and gross weight, the maneuver being conducted, use of aircraft lights, level of cockpit lighting selected, and the pilot's eye reference position (proper seat adjustment). Any of these factors can adversely affect seeing-conditions during any particular operation in instrument conditions. The effect of these factors significantly increases as visibility or RVR decreases. For example, a pilot's seat adjustment (eye reference position) used by many pilots for en route or CAT I operations in some aircraft may not provide adequate seeing-conditions for takeoff or landing operations in CAT II and CAT III weather conditions (see paragraph 505). The discussions in paragraphs 499 through 505 are intended to provide a basic understanding of some general factors affecting seeing-conditions.

499. WEATHER CONDITIONS/FOG STRUCTURE. Weather conditions have the most obvious effect on seeing-conditions. Visible moisture such as clouds, rain, snow, and fog, are the most common elements that obstruct pilot vision. Airborne particles such as smoke, dust, or haze can also significantly

obstruct vision. During operations in CAT I weather conditions, the most frequently encountered obstructions to vision are related to cloud bases, visible precipitation, and airborne particles. In CAT II weather conditions and especially in CAT III conditions, various forms of fog are the primary obstructions to vision. The primary factors associated with these types of obstructions to pilot vision, and those which have the most significant effects on seeing-conditions, are as follows:

- Density of the obstruction (number of airborne particles per unit volume)
- Depth of the obstruction (thickness)
- Variation in density as a function of height above the surface (vertical structure)
- Variation in density as a function of distance from the runway (lateral structure)

A. Vertical/Lateral Structure. Cloud bases commonly encountered in CAT I weather conditions represent an extreme example of vertical structure. Cloud bases are created by an abrupt change in the density of water droplets suspended in the atmosphere as a function of height above the surface (abruptly increased density as height increases). Above the cloud base, vision is significantly restricted due to the higher density of suspended water droplets. As a cloud base is penetrated on descent, seeing-conditions rapidly improve because of a significant reduction in the density of the obscuring phenomena. Another example of vertical structure is a condition known as homogeneous fog. The density of water droplets in homogeneous fog is uniform with height and does not change as the aircraft descends. In classic homogeneous fog, the seeing-conditions gradually improve as the aircraft descends, primarily because the depth of the obstruction to vision decreases as the distance between the pilot's eyes and the runway decreases (see figures 4.2.3.1. and 4.2.3.2.). Shallow ground fog represents the opposite extreme of the cloud base example. When shallow ground fog exists, the density of the water droplets increases as the aircraft descends into the fog. In these situations, seeing-conditions can decrease dramatically and result in loss of adequate external visual references necessary to manually maneuver the aircraft in the final stages of landing. Shallow ground fog can be insidious. In some shallow ground fog conditions, the entire landing surface may be visible several miles out on final approach, but, just before touchdown, seeing-conditions may deteriorate to less than 500 feet. Although the variability in fog conditions is almost infinite, there are three general types of fog structures:

(1) Homogeneous Fog. Homogeneous fog is a condition in which the density is uniform with height (uniform vertical structure). Homogeneous fog conditions are fog conditions typically programmed into most flight simulators. In training scenarios using this fog condition, seeing-conditions steadily improve as the aircraft descends. Homogenous fog is usually encountered in very stable meteorological conditions and can exist for long periods of time.

(2) Mature Fog. Mature fog is a condition in which water droplet density increases with height. Seeing conditions rapidly deteriorate with height and conversely rapidly improve as an aircraft descends. Mature fog conditions are seldom programmed into flight simulators. Mature fog is usually encountered when fog begins to "lift" after an extended period of stable homogeneous fog. Often, mature fog will evolve into a cloud base before dissipating.

(3) Shallow Ground Fog. Shallow ground fog is a condition in which water droplet density decreases with height. Seeing conditions rapidly improve with height and conversely rapidly deteriorate as an aircraft descends. In extreme cases during the early formation of shallow ground fog, it is possible from the cockpit of a large aircraft (B-747) to see the control tower and tails of other airplanes but not to see the runway or taxiway at all. Shallow ground fog is usually encountered when radiation fog begins to form as the surface cools following sunset. If appropriate conditions exist for an extended period, shallow ground fog will usually evolve into homogeneous or mature fog.

B. Fog structures and other weather conditions have a major effect on seeing-conditions. The wide variation in weather conditions that routinely occur do not permit the use of "hard and fast" rules to determine the precise seeing-conditions that will be encountered during any particular operation. Variations in weather conditions are the primary reasons why the decision which must be made at DH or MDA/MAP is not a decision to land, but is a decision either to continue the approach using external visual references or to go-around. Instrument procedure design criteria and operational procedures allow for these limitations; therefore, safe alternatives are provided if adequate visual references cannot be established upon arrival at a decision point or maintained after descending below that point.

501. VISUAL AIDS AND RUNWAY ENVIRONMENT. A primary factor in the identification of objects, such as landing surfaces, depends on a pilot's ability to see contrasts between the object and the surrounding background. The ability to see and recognize contrasts in the brightness or color of an object is much greater than the ability to determine the actual

level of illumination of an object. For example, a 100-watt light bulb seems to be much brighter at night than during daylight conditions even though the actual level of illumination is the same. The contrast between a 100-watt light and a dark night background is much greater than it is in a daylight background. The presence of airborne particles or water droplets causes the available light to diffuse or scatter. This scattering effect raises the overall illumination of the background which in turn reduces the level of contrast between an object and its background. This is the primary reason why seeing-conditions decrease when landing into the sun on a hazy or foggy day or when the landing lights of an aircraft are turned on in snow or fog conditions. Reduced levels of contrast increase the difficulty of identifying objects such as snow-covered runways or runways located in heavily lighted urban areas. As a result, contrast levels must be increased to provide the seeing-conditions necessary for the safe conduct of operations with reduced operating minimums. Seeing conditions can be improved by using visual aids and by enhancing the level of contrast within the runway environment. For example, the difference in the level of contrast between a landing or takeoff surface and the surrounding area can be improved through good airport maintenance practices. Such practices as planting and maintaining grass around a runway and between a runway and a taxiway, and plowing snow-covered runways, improves levels of contrast. The most effective way to improve the contrast of a landing or takeoff surface, however, is to use visual aids because they are effective in a variety of weather conditions. Visual aids such as approach lights, runway lights, and runway markings significantly improve the contrast between a landing or takeoff surface and the immediate surrounding area. The improved contrast provided by approach and runway lighting significantly improves seeing-conditions in both night and daylight operations. Approach lighting and runway lighting are essential elements of all landing operations conducted in weather conditions below RVR 4000 and all takeoff operations below RVR 1600.

503. EFFECTS OF AIRCRAFT/COCKPIT DESIGN ON SEEING CONDITIONS. The overall design of an aircraft and the design of a cockpit significantly affect seeing-conditions during the latter stage of an approach and landing and during the initial stage of a takeoff. Seeing conditions are affected by geometric factors related to the design of an aircraft's structure and by aerodynamic factors related to an aircraft's pitch axis. Figure 4.2.3.3. provides an illustration of these factors. Figure 4.2.3.1. provides an illustration of how the visual scene "opens up" as an aircraft descends. The visual segment used in these illustrations represents that portion of the approach light and landing surface visible to the pilot when looking over the nose of the aircraft from the proper sitting position (eye reference position). When analyzing these illustrations, it is important to note the following:

- That the radio (radar) altimeter is calibrated to read the height of the landing gear above the terrain (when in the landing configuration)
- That the glidepath antenna of an aircraft tracks down the centerline of the glideslope when the instruments in the cockpit indicate that the aircraft is on glidepath
- That the pilot's eyes are always higher than what is indicated on the radio (radar) altimeter
- That the pilot's eyes are above the electronic glideslope in most aircraft

A. Aircraft and Cockpit Physical Design. The significant factors related to the physical design of an aircraft and cockpit combination that affect seeing-conditions most are as follows (see figure 4.2.3.3., illustration A):

- Distance along the longitudinal axis from directly above the main landing gear to directly beneath the pilot's eyes
- Vertical distance from the pilot's eyes to a position abeam the main landing gear
- Distance along the longitudinal axis from directly beneath the glideslope antenna to directly beneath the pilot's eyes
- Vertical distance from the glideslope antenna to a position abeam the pilot's eyes
- Cockpit-cutoff-angle

B. The Cockpit-Cutoff-Angle. The cockpit-cutoff-angle (CCO) is the angle, measured downward, from the longitudinal axis of the aircraft (zero pitch reference) to the lowest (most depressed) angle that can be seen over the aircraft's nose from the proper sitting position (eye reference position) (see figure 4.2.3.3., illustration B). The CCO in most transport category aircraft is between 15 and 25 degrees. Although many visual flight rules (VFR) helicopters have an excellent CCO, most IFR helicopters have CCO's equivalent to transport category aircraft.

C. Aircraft Aerodynamic Design. The significant factors associated with the aerodynamic design of an aircraft that affect seeing-conditions are related to pitch attitudes. The pitch attitudes necessary for final approach, flare (deceleration for rotorcraft), and landing (air taxiing for rotorcraft), have a major effect

on seeing-conditions. This is because a "nose-up" attitude reduces the downward viewing angle relative to the horizon, which reduces seeing-conditions (see figure 4.2.3.3., illustration B). For example, an aircraft with an excellent CCO of 21 degrees and a high final approach pitch attitude of 8 degrees would have a seeing-condition comparable to a similar size aircraft having a poor CCO of 13 degrees and a 0 degree pitch attitude. Since the pitch attitude on final approach varies with approach speed, aircraft configuration, and gross weight, the seeing-conditions change as these operational factors change. The aircraft's flare characteristics (deceleration for rotorcraft) can also have a significant effect on the seeing-conditions during landing. The seeing-conditions during flare decrease if any positive pitch change is required. In helicopters, the most severe degradation to the seeing-conditions occurs during deceleration to air taxi or hover. Often, the deceleration rate in a helicopter must be limited to maintain adequate seeing-conditions. For example, when a typical IFR helicopter with an 18-degree CCO and a 0-degree final approach attitude approaches an 18-degree pitch attitude during a maximum effort deceleration, the pilot will lose sight of the landing surface. At an 18-degree pitch attitude with an 18-degree CCO, the lowest downward viewing angle would be parallel with the horizon. Therefore, a deceleration pitch attitude must be maintained significantly below 18 degrees to maintain adequate visual references with the landing surface. A similar situation is encountered in turbojet airplanes during takeoff rotation and initial climb when external visual references can be lost.

505. EYE REFERENCE POSITION. Eye reference position is a critical factor in achieving optimum seeing-conditions. A pilot's seat must be individually adjusted so that the pilot's eyes are located at an optimum eye reference position. When seated in this position, a pilot should be able to take advantage of the full CCO, maintain reference with the necessary flight instruments, and operate all necessary controls. Many aircraft have special devices that indicate proper seat adjustment. Improper seat adjustment, especially in CAT II and III operations, can prevent the pilot from acquiring adequate external visual reference upon arrival at DH or MDA/MAP. The seating position commonly used for en route operations in many aircraft is too low and too far aft for the pilot to achieve optimum seeing-conditions during approach and landing operations. This lower and farther aft seating position results in a reduction of the CCO, which degrades the seeing-conditions by reducing the segment of the approach and landing surface visible over the aircraft's nose. A pilot maintaining this undesirable seating position during approach and landing may tend to compensate for the reduced CCO, and its effects, by leaning forward in an attempt to acquire the necessary external visual references. A consequence of this practice is a tendency to unintentionally reduce the pitch attitude. Since seeing conditions improve as the nose is lowered, this tendency to reduce pitch attitude can contribute to the tendency to "duck under," which has resulted in landings short of the runway.

507. THRESHOLD CROSSING HEIGHT (TCH) CONCEPT. Many complex technical factors must be considered during the installation of instrument landing system (ILS) and microwave landing system (MLS) equipment to support approach and landing operations at any particular runway. The signals-in-space radiated by the facility must meet required flight inspection requirements (accuracy and course structure) for the particular category of operation to be supported. Design of ground support systems must be such that there is an extremely small probability of losing electronic guidance during actual operations (continuity of service). The design must also provide for an extremely high probability of providing continuously reliable electronic guidance (integrity). The ILS or MLS accuracy and course structure, continuity of service, and integrity must meet established standards for the category of operation authorized at that facility. Another critical factor in installing and siting these systems is the TCH. The following discussion addresses significant factors that must be considered when establishing acceptable TCH's.

A. Aircraft Glideslope Antenna Location. The glideslope receiver of the aircraft detects vertical movement (displacement) of the glideslope antenna in relation to the centerline of an electronic glideslope radiated from a ground facility. As a result, the location of the aircraft's glideslope antenna on the aircraft directly relates to terrain and obstacle clearance during the final stages of an approach and landing. The physical dimensions and aerodynamic characteristics of the aircraft (especially pitch attitude) are important factors in the determination of the proper location of a glideslope reception antenna. In conventional aircraft, the glideslope antenna is located above the height of the main landing gear. Since an aircraft is maneuvered so that its glideslope antenna tracks the centerline of the electronic glidepath, the main landing gear will track below the glidepath (see figure 4.2.3.3., illustration A). For example, if the glideslope antenna of an aircraft is located 40 feet above the landing gear and the electronic glidepath crosses 30 feet above the runway threshold, the main landing gear will touch down short of the runway since the glideslope antenna, not the landing gear, flies the glidepath. This example

illustrates the important relationship between the aircraft glideslope antenna location and the electronic glidepath TCH. This situation can be resolved by siting the ILS or MLS to achieve a specified TCH and by requiring proper location of the glideslope antenna on the aircraft. Similar problems are encountered when using visual vertical guidance systems such as visual approach slope indicator (VASI) or precision approach path indicator (PAPI), since the pilot's eyes track the visual glidepath and the gear follows a lower path. The need to maintain certain landing gear crossing heights at the threshold establishes the minimum safe TCH for a particular aircraft. The current (1989) minimum TCH requirements are based on the DC-10 which has, in landing configuration, the greatest vertical displacement between the antenna location and the landing gear.

B. Acceptable TCH's. Siting ILS or MLS equipment to achieve a particular TCH can be a complex task. Operational experience with siting these systems has shown a need to establish a range of acceptable TCH's. The types of aircraft likely to use a particular facility must be considered. Another consideration in establishing the range of acceptable TCH's is the pilot's ability to detect (by external visual references) deviations from the proper glidepath and to make the necessary flightpath adjustments for adequate landing gear clearance at the threshold. Proper TCH's in CAT II and especially CAT III operations are more critical because of the limited visual cues available and the use of automatic landing systems. The TCH siting criteria for facilities used in the U.S. National Airspace System are established in FAA Order 8260.34, "Glideslope Threshold Crossing Height Requirements."

(1) Minimum and Maximum Acceptable TCH's in the U.S. The minimum acceptable TCH at a particular runway is determined by the most "TCH critical" aircraft likely to be used at that facility. The maximum acceptable TCH also depends upon the types of aircraft likely to be used at the facility. The instrument approach and landing system must be sited so that all aircraft have a high probability of a safe touchdown (deceleration to air taxi or hover for rotorcraft) in the TDZ. Landing performance is based on the assumption that touchdown will occur in the TDZ. Very high TCH's will not permit some aircraft to safely touch down within the TDZ; therefore, maximum acceptable TCH's must also be established.

(2) TCH's at Foreign Airports. Glideslope TCH's at foreign airports may not be equivalent to U.S. criteria. It is important for pilots and operators using foreign airports to understand the significance of TCH and to know the minimum TCH's that can be safely used by their aircraft. Operations should not be conducted to runways with TCH's below minimum acceptable TCH's for any particular aircraft, unless special limitations are placed on the conduct of the operation. These special limitations must be such that a pilot can safely and consistently touch down within the TDZ and safely complete the rollout on the available runway length.

509. VISUAL ILLUSIONS. Human perceptual limitations can cause visual illusions during all-weather terminal area operations. Generally, visual illusions are due to limitations in a pilot's ability to accurately perceive the three-dimensional position of the aircraft, its velocity, and/or its acceleration in relation to a takeoff or landing surface. These illusions usually become more prevalent as seeing-conditions deteriorate. The following is a discussion on the significance of some visual illusions that can occur during approach and landing operations.

A. Vertical Height and Flightpath Illusions. The ability to visually perceive vertical height and vertical flightpath in relation to a surface depends upon many factors. These factors include the size and orientation of a surface in relation to its background (level, tilted up/down, or tilted left/right) and the number of discrete visual features available. An example of a vertical position illusion caused by the size of a landing surface is when a pilot perceives that the aircraft is lower than it actually is when landing on a wider than normal runway or on a large, smooth water surface. This illusion can occur even in excellent seeing-conditions and often results in "flaring-high." Conversely, an illusion of "being too high" can occur during a landing on very narrow surfaces. The distance from a particular surface is also difficult to determine visually, unless numerous visual features are available within a pilot's near-field vision. The absence of features in the near-field vision, such as in the situation commonly referred to as a "black hole," can create an illusion of being "too high." This illusion is caused by the absence of discrete features in a pilot's near-field vision resulting in the incorrect perception that the distance to the landing surface is closer than it actually is during an approach. This illusion can cause a pilot to believe the aircraft is too high. The pilot's response to this illusion can be to fly the aircraft below the desired approach path. As weather conditions deteriorate, the reduction in external visual cues in the near-field vision can have similar effects. Visual determination of vertical flightpath is strongly influenced by the orientation of the plane of the landing surface and/or the orientation of its surrounding background. For example, an upward sloping runway or background can create an illusion that a 3-degree vertical flightpath is too steep since a 2-degree upslope

can make a 3-degree flightpath look like 5 degrees. The pilot's ability to accurately perceive vertical height and flightpath rapidly degrades as seeing-conditions deteriorate. This degraded ability is caused by reductions in the number of visual features available in a pilot's near-field vision. For CAT I operations with minimums below 3/4 statute mile, it is necessary to establish certain criteria to negate the adverse effects of vertical height and flightpath illusions. Some of these criteria are as follows:

- Maximum acceptable runway gradients
- Maximum acceptable gradients (up or down) for the approach lights
- The installation of approach and in-runway lights and runway markings to more clearly define the plane of the landing surface

B. Lateral Position and Flightpath Illusions. The ability to accurately perceive lateral position and lateral rates of movement in relationship to the orientation of the landing or takeoff surface depends upon the number of discrete visual features in a pilot's far-field vision. With sufficient visual cues in the far-field vision, a pilot can readily orient the aircraft's lateral position, direction, and rate of movement, with respect to the orientation of the surface. Lateral position errors can also be readily detected by visual features in a pilot's near-field vision. In fact, deteriorating seeing-conditions can enhance a pilot's ability to perceive the aircraft's lateral position with respect to the takeoff or landing surface by restricting the pilot's vision to near-field vision. The pilot's ability to perceive the aircraft's directional orientation in relation to the runway is significantly degraded, however, when there is a deterioration or loss of visual features in the pilot's far-field vision. This deterioration in directional cues increases the difficulty of manually maintaining directional control or manually establishing the drift correction necessary for tracking runway centerline. If the pilot's primary visual task is to assess the performance of an automatic flight control system, near-field visual features permit the detection of an abnormal autopilot tracking performance sooner, because of the enhanced ability to perceive lateral displacement and rates of change in lateral position. During manual takeoffs and landings, however, this lateral illusion can, in certain circumstances, adversely affect the pilot's ability to control the aircraft. This illusion exaggerates lateral position errors and/or the rate of displacement from runway centerline. As a result, a pilot may tend to over-compensate (overcorrect) when making heading changes and get into a "pilot-induced oscillation." Pilot-induced oscillations can lead to loss of directional control and possible departure from the runway. Criteria that have been established to negate the effects of lateral illusions include the following:

- Installation of approach and in-runway lights to more clearly define the orientation (direction) of the landing surface
- Use of automatic flight control systems (autoland) or special flight instruments (such as heads-up display)
- Special flightcrew training and qualification requirements

C. Other Illusions. Poor seeing-conditions, especially in patchy or variable weather conditions, can create illusions that affect a pilot's ability to accurately perceive aircraft attitude and/or ground speed. Visual roll (bank) cues are usually available during the latter stages of approach and landing (even in most CAT III operations). In very poor seeing-conditions, however, a subtle deterioration in visual roll cues can occur, which can affect a pilot's ability to quickly recognize an unacceptable touchdown roll attitude (bank angle). This illusion, that the visual roll cues are better than they actually are, can result in the wingtip or flap track contacting the runway. Pitch attitude illusions can occur during operations conducted in patchy or variable weather conditions. Most pilots have learned through experience that the visual scene expands as an aircraft descends and that it contracts when the aircraft pitch attitude increases. As a result, a descent into rapidly deteriorating seeing-conditions, during the final phases on an approach and landing, can create a "pitch-up" or "leveling off" illusion. Conversely, a descent into rapidly improving seeing-conditions such as "breaking out" in a mature fog condition can create a pitch down or rapid descent illusion. The ability to correctly perceive ground speed can also be significantly degraded by deteriorated visual cues, especially during operations in CAT III weather conditions. Unsafe taxi speeds can result in CAT IIIb taxi operations, unless special equipment (such as inertial navigation system (INS) ground speed) or special procedures are used.

NOTE: Human perceptual limitations and the resulting visual illusions are prime reasons for establishing specific requirements as prerequisites for conducting various categories of all-weather terminal area operations. Some of these specific requirements include the establishment of operating minimums, special operating procedures, special flightcrew training and qualification, and special airborne and ground-based equipment. Operations not in compliance with these specific requirements are unsafe.

511. STABILIZED APPROACH CONCEPT. In instrument weather conditions, a pilot must continuously assess instrument information throughout an approach to properly maneuver the aircraft (or monitor autopilot performance) and to decide on the proper course of action at the decision point (DH or MDA/MAP). Significant speed and configuration changes during an approach can seriously complicate tasks associated with aircraft control, increase the difficulty of properly evaluating an approach as it progresses, and complicate the decision of the proper action to take at the decision point. The handling and engine-response characteristics of most turbojet aircraft further complicate pilot tasks during approach and landing operations. A pilot must begin formulating a decision concerning the probable success of an approach before reaching the decision point. The pilot's decision-making process requires the pilot to be able to determine displacements from the course or glidepath centerline, to mentally project the aircraft's three-dimensional flightpath by referring to flight instruments, and to then apply control inputs as necessary to achieve and maintain the desired approach path. This process is simplified by maintaining a stable approach speed, descent rate, vertical flightpath, and configuration during the final stages of an approach. Maintaining a stable speed, descent rate, vertical flightpaths, and configuration is a procedure commonly referred to as the stabilized approach concept. Operational experience has shown that the stabilized approach concept is essential for safe operations with turbojet aircraft, and it is strongly recommended for all other aircraft. Configuration changes at low altitude should be limited to those changes that can be easily accommodated without adversely affecting pilot workload. A stabilized approach for turbojet aircraft means that the aircraft must be in an approved landing configuration (including a circling configuration, if appropriate), must maintain the proper approach speed with the engines spooled-up, and must be established on the proper flightpath before descending below the minimum "stabilized approach height" specified for the type of operation being conducted. These conditions must be maintained throughout the rest of the approach for it to be considered a stabilized approach. Operators of turbojet aircraft must establish and use procedures that result in stabilized approaches. Pilots operating propeller-driven aircraft should also maintain a stable speed and flightpath on final approach. A stabilized approach must be established before descending below the following minimum stabilized approach heights:

- 500 feet above the airport elevation during VFR or visual approaches and during straight-in instrument approaches in VFR weather conditions
- MDA or 500 feet above airport elevation, whichever is lower, if a circling maneuver is to be conducted after completing an instrument approach
- 1,000 feet above the airport or TDZ elevation during any straight-in instrument approach in instrument flight conditions
- 1,000 feet above the airport during contact approaches

NOTE: Principal inspectors shall not approve an operator's procedure unless the stabilized approach concept is used for all turbojet aircraft operations. It is recommended for all propeller-driven aircraft and rotorcraft in IFR weather conditions.

513. AIR TRAFFIC CONTROL CONCEPTS. ATC services are important elements of operations in instrument weather conditions. These services are essential for the safe conduct of CAT II or CAT III operations. The requirement for ATC to provide certain services to flightcrews becomes more critical as seeing-conditions deteriorate. In such conditions, a higher degree of reliance must be placed on both the guidance provided by the electronic and visual aids, and by the necessary ATC services that ensure that those aids provide reliable guidance. In poor seeing-conditions, controllers and pilots cannot see other traffic in the terminal area, and increased reliance must also be placed on ATC information and collision-prevention services. The objectives of ATC services in all-weather terminal area operations are as follows:

- Preventing collisions between aircraft
- Preventing collisions between aircraft and obstacles during operations on maneuvering areas of the airport
- Expediting and maintaining an orderly flow of traffic
- Providing necessary protection to the runway safety areas, obstacle critical areas, and ILS/MLS critical areas
- Providing advice and information necessary for safe and efficient operations
- Providing notification and assistance during crash, fire, and rescue operations

A. Prevention of Collisions. Seeing conditions associated with most CAT I operations permit pilots to see and avoid other traffic and obstacles during ground movement and during the final stages of landing. Under the same seeing-conditions, however, air

traffic controllers may not be able to visually identify the aircraft or obstacles. In many CAT I situations and during CAT II and CAT III operations, neither controllers nor pilots will be able to see all traffic or obstacles that could affect safe operations. Therefore, it is essential during these conditions, to use a system and/or procedures that effectively ensures the separation of an aircraft from other aircraft and an aircraft from vehicles and obstacles. The systems and procedures used to satisfy these objectives must be tailored to accommodate the unique environment of each airport. The overall system used usually incorporates the following general principles:

- Control procedures that ensure that the runway is kept free of other aircraft and obstructions while an aircraft is landing or taking off on that runway
- Use of procedures, visual aids, and/or systems (such as surface movement radar (ASDE) to facilitate ground movement)
- Training for ground personnel
- Procedures to deny access to nonessential personnel and vehicles in aircraft movement areas
- The requirement for vehicles in movement areas to maintain radio contact with ATC
- Procedures to notify persons operating within movement areas when the restrictions change due to varying weather conditions

B. Maintaining an Orderly Flow of Air Traffic. It is preferable that ATC arrange the traffic flow so that aircraft equipped for CAT II and CAT III operations are not unnecessarily delayed by aircraft not equipped for those operations. ATC may need to provide additional longitudinal separation between successive landing aircraft since poorer seeing-conditions increase the difficulty of ground movement. In these situations pilots require more time to exit the runway and its associated runway safety areas, obstacle-free zones, and ILS/MLS critical areas. During weather conditions requiring precision approaches, adjustments in traffic flow must be made to establish an aircraft on a proper course for interception of the final approach course (maximum of 45 degrees offset) before glidepath interception. In these conditions, speed restrictions must be removed in enough time for the pilot to begin a stabilized approach before descending below 1,000 feet AGL.

C. Runway Safety Area, Obstacle-Free Zone, and ILS Critical Area Protection. Seeing conditions encountered during all-weather terminal area operations may prohibit a pilot from seeing and avoiding all obstacles. As a result, the pilot must rely on the ground-based electronic guidance, ATC control equipment, and ATC procedures and techniques to avoid obstacles. These procedures and equipment must ensure that other aircraft and/or vehicles are not within the runway safety areas, obstacle-free zones, and the ILS or MLS critical areas when an aircraft is in the final stages of an approach and landing or when taking off on that runway. Runway safety areas and obstacle-free zones must be controlled to ensure that obstacle protection is provided during takeoff, approach, and landing, and during a missed approach from low altitudes. ILS or MLS critical areas must be controlled to ensure that electronic guidance signal integrity is maintained. Aircraft and/or vehicles within these critical areas can cause significant disturbances to electronic guidance signals. ILS or MLS signals can also be disturbed by reflections caused by aircraft overflying an ILS or MLS antenna or flying through the on-course signal between an ILS or MLS antenna and a landing aircraft. Aircraft and/or vehicles can also adversely affect glidepath signals if they are in close proximity to a glideslope or elevation antenna. In CAT II and particularly CAT III operations, additional longitudinal separation between landing aircraft may be required to allow an aircraft to complete the landing and to taxi clear of the critical areas or zones before the next aircraft enters a critical phase of an approach.

D. Advice and Information. During instrument flight operations in the terminal area, it is essential for pilots and operators to have accurate information concerning weather conditions, runway surface conditions, and the status of necessary facilities and services. The types of advice and information needed to conduct instrument flight operations in terminal areas include the following:

- Reports of weather conditions (such as altimeter settings, visibility, RVR, winds, and cloud heights)
- Operational status of navigation facilities
- The degree of protection provided to ILS or MLS critical areas, obstacle-free zones, and runway safety areas
- Factors that could significantly affect ground movement and control of ground movement
- Reports on runway surface conditions (such as wet, snow-covered, icy) and braking action reports, if appropriate
- Notices to Airmen (NOTAM) that could affect operations

E. Crash, Fire, and Rescue. Poor seeing-conditions increase the difficulty of identifying, locating, and responding to aircraft requiring crash, fire, and rescue (CFR) services. As seeing-conditions deteriorate, the role of ATC in notifying CFR facilities and assisting CFR efforts increases in significance. Procedures, systems, and techniques must be used to ensure that aircraft requiring assistance can be quickly identified and located, and that CFR services can be dispatched and provided expeditiously.

515. AIRPORT FACILITIES AND SERVICES. The varied seeing-conditions encountered in all-weather terminal area operations require pilots to rely heavily on visual aids, electronic guidance from ground-based facilities, and other facilities and services provided by the airport. Therefore, basic VFR airport facilities and services must be enhanced before safe operations can be conducted in instrument flight conditions. Runways and taxiways must meet more stringent criteria with respect to width, length, marking, and lighting. Instrument approach aids and instrument approach procedures are required. Visual aids are needed to assist a flightcrew during transition from instrument to visual flight and during ground movement. Meteorological observation and measurement equipment must be available to provide real-time information on weather conditions. Equipment and procedures must be established to provide aeronautical information on runway surface conditions and the status of airport facilities and services. Enhancements to basic VFR airport facilities and services necessary to support instrument flight operations include the following general factors:

- Physical characteristics of the runway environment, including approach, departure, and prethreshold terrain characteristics
- Obstacles and the obstacle limitation assessment surfaces
- Visual aids
- Electronic aids
- Secondary (standby) power supplies

A. Physical Characteristics. Physical characteristics of a runway environment become increasingly important as seeing-conditions deteriorate. Excessive runway or approach light gradients can create undesirable visual illusions and can cause hard or long landings. Longer runway lengths are necessary for reasons such as the tendency to land farther down the runway because of visual illusions and the increased difficulty in controlling the aircraft's flightpath. The topography in the approach and prethreshold areas should be regular and preferably level to ensure proper operation of radio (radar) altimeters, flight director systems, and automatic landing systems. The operation of automatic landing systems and other systems that provide flight guidance during flare and landing, such as heads-up display (HUD), are dependent on input from radio altimeters. As a result, the flare profile, touchdown sink rate, and touchdown point can be adversely affected by the profile of the prethreshold terrain. Where the prethreshold terrain for a particular runway could affect safe operations (examples include SEA 16R, CVG 36, MSP 29L, and PIT 10L), an in-flight demonstration must be made to determine that the flight control system of a particular aircraft is not adversely affected by the prethreshold terrain profile. Additionally, the prethreshold terrain at certain runways (examples include, SEA 16R, CVG 36, MSP 29L, and PIT 10L) may not permit a radio altimeter to be used to define DH for CAT II or alert height (AH)/DH for CAT III operations for certain aircraft. In certain situations, an inner marker (IM) can be used to define the CAT II DH or the CAT III AH.

B. Obstacles and Obstacle Limitation Assessment Surfaces. Degraded seeing-conditions decrease a pilot's ability to see and avoid obstacles. Therefore, it is essential that obstacle protection be provided along the approach paths, missed approach and departure flightpaths, and in areas on or near runways used for takeoffs and landings. Obstacle protection criteria for different categories of operations and the various phases of an approach, landing, missed approach, takeoff, and departure are specified in U.S. TERPS, ICAO PANS-OPS, and applicable advisory circulars (AC). In certain situations, obstacles may prevent the conduct of CAT II or CAT III operations. In other situations, higher than normal minimums for CAT I or CAT II operations may be required to provide necessary seeing-conditions to see and avoid controlling obstacles. During precision approach operations, it is essential to provide obstacle protection in runway safety areas and obstacle-free zones. A runway safety area is an area adjacent to the runway that must be free from fixed or mobile "nonfrangible" obstructions. Runway safety areas reduce the potential for catastrophic accidents if portions of the aircraft structure (such as a wingtip) extend beyond the runway edge, or if an aircraft departs the runway during a landing or takeoff roll. An obstacle-free zone is a three-dimensional area including portions of the landing surface, which provides obstacle clearance during landings or during rejected landings, including missed approaches after touchdown. The only fixed obstructions permitted in runway safety areas or obstacle-free zones are frangible objects or obstructions that are fixed by their functional purpose. "Fixed by their functional purpose" means that the installation of the

object in those areas is essential to the safe conduct of operations on the runway; there are no alternative locations (examples include such objects as runway lights, glideslope/elevation antennas, and RVR reporting systems). Mobile obstructions (such as aircraft and/or vehicles) are not permitted within runway safety areas or obstacle-free zones while aircraft are using the runway. Aircraft, vehicles, and other objects that could disturb ILS or MLS electronic guidance are not permitted in ILS or MLS critical areas when other aircraft are critically dependent on this type of guidance. Since protection of these areas or zones is critical to safe operations (particularly during degraded seeing-conditions), visual aids (such as signs, markings, or lighting) must be provided for identifying the boundaries of these areas to pilots and operators of other vehicular traffic. ATC procedures and ground movement restrictions must be provided to ensure that these areas are protected.

C. Visual Aids. Visual aids are essential for most all-weather terminal area operations. The functions of visual aids during takeoffs and landings are discussed in paragraph 477. Visual aids are also important for the safe and expeditious guidance and control of taxiing aircraft. These aids include signs, markings, and lights, which identify holding points or indicate directions, and the marking or lighting of the taxiway centerline and edges. The conspicuousness of runway and taxiway markings deteriorates rapidly, especially at busy airports. These markings must be frequently inspected and maintained, particularly for CAT II or CAT III operations. All lighting systems should be monitored by ATC so that timely information on system failures or malfunctions can be provided to pilots. Regular visual inspections of all sections of the lighting systems are normally used to determine the status of individual lights. Therefore, it is usually only necessary for ATC to remotely monitor lighting circuits to determine whether the proper amount of power is being demanded by, and delivered to, the lighting systems. Remote monitoring of approach, runway edge, and in-runway lighting is essential during CAT II and CAT III operations, unless frequent visual inspections (every 2 hours) or timely pilot reports indicate the lights are serviceable for the operations in progress.

D. Nonvisual (Electronic) Aids. Ground-based or space-based systems that provide electronic guidance must provide the quality of guidance (flight inspected course structure), integrity (degree of trust that can be placed on the accuracy of the guidance), and continuity of service (protection against loss of signal) appropriate to the category of the operation being conducted (CAT I/II/III). Systems used for precision approach operations must provide acceptable glidepath angles and acceptable TCH's. A classification system has been established through ICAO for ground-based electronic precision approach systems. This classification system reflects the ground-based system configuration, course quality, integrity, and continuity of service capabilities (see FAA Order 6750.24, "ILS and Ancillary Electronic Component Configuration and Performance Requirement"). Since the electronic aids provide such a critical function, pilots conducting takeoff or landing operations must be notified immediately of any changes in system status, or of any malfunctions or failures. To meet this requirement, all facilities associated with ILS or MLS ground equipment must be constantly monitored by ATC or other appropriate personnel. The required levels of reliability, integrity, and continuity of service for these facilities are usually provided by automatic electronic monitoring systems, on-line standby equipment (backup transmitters), duplication of key functions, and secondary power supplies.

E. Secondary Power Supplies. Secondary power sources (standby power supplies) are essential for ensuring that visual aids, electronic aids, meteorological reporting systems, and communication facilities continue to function, even if the main source of power is interrupted. Loss of power to these systems becomes more critical as seeing-conditions deteriorate. Therefore, as conditions change from CAT I to CAT II or CAT III, the levels of required redundancy increase, and stand-by power switch-over times decrease. Secondary power supply requirements are established in ICAO annexes 10 and 14 and various FAA orders and AC's.

516.–530. RESERVED

FIGURE 4.2.3.1.
VISUAL SEGMENT VS. RADIO ALTITUDE

HOMOGENEOUS ATMOSPHERE (AIRCRAFT TYPE L1011 ON A 3-DEGREE GLIDEPATH AT 1800 FEET RVR)

Distance to Touchdown	Pilot's Eye Height (Ft.)	Radio Altitude (Ft.)	Segment Visible (Ft.)
7633	404	373	0
6223	331	300	333
5746	306	275	445
5269	281	250	558
4792	256	225	670
4315	231	200 (DH)	782
3838	206	175	893
3361	181	150	1004
2884	156	125	1115
2407	131	100	1225
1930	106	75	1335
1453	81	50	1444
968	61	30	1532
484	44	13	1606
TD	31	TD	1663

FIGURE 4.2.3.2.
COMPARISON OF VISUAL SEGMENT AT 50 FEET AND DURING ROLLOUT

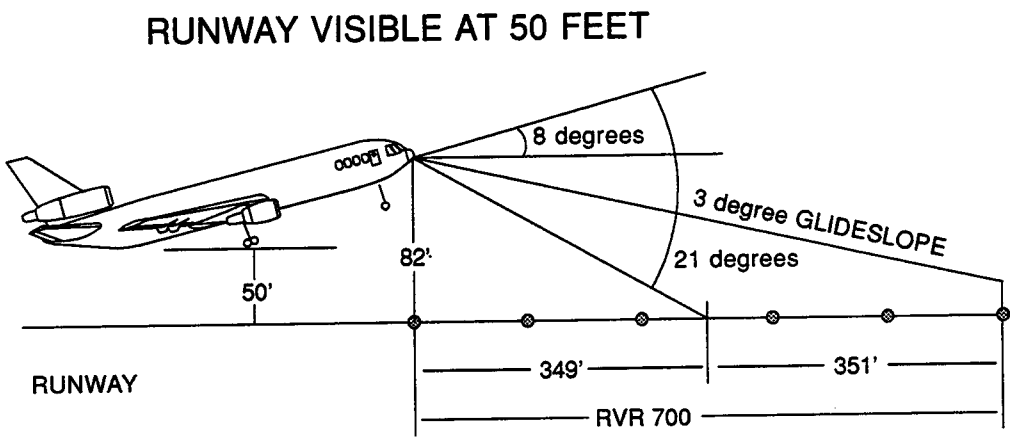

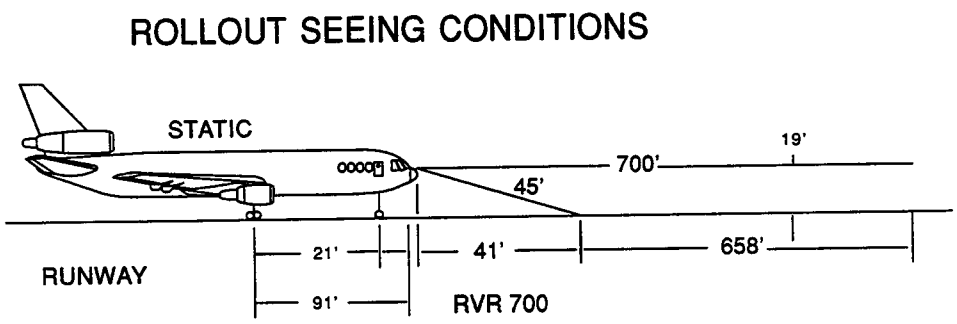

FIGURE 4.2.3.3.
EFFECTS OF AIRCRAFT AND COCKPIT DESIGN ON SEEING CONDITIONS

ILLUSTRATION A

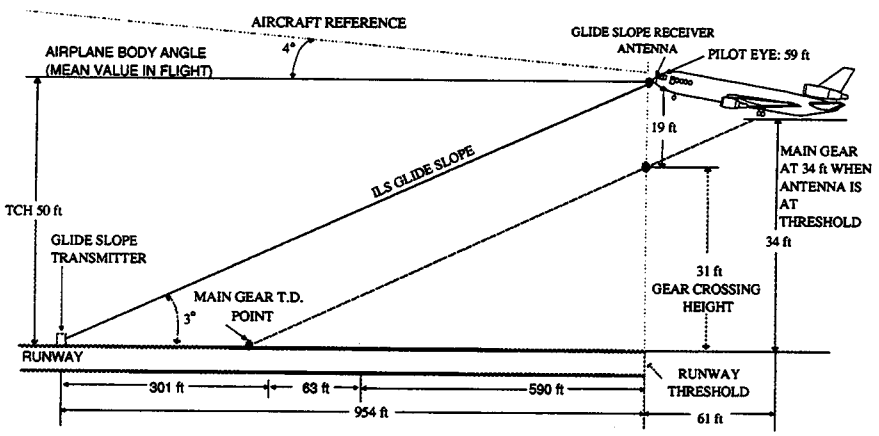

ESTIMATED ILS APPROACH

AIRPLANE FOLLOWING STRAIGHT LINE EXTENSION OF GLIDE PATH AIRPLANE AT THRESHOLD

ILLUSTRATION B

VISUAL GROUND SEGMENTS
LANDING APPROACH

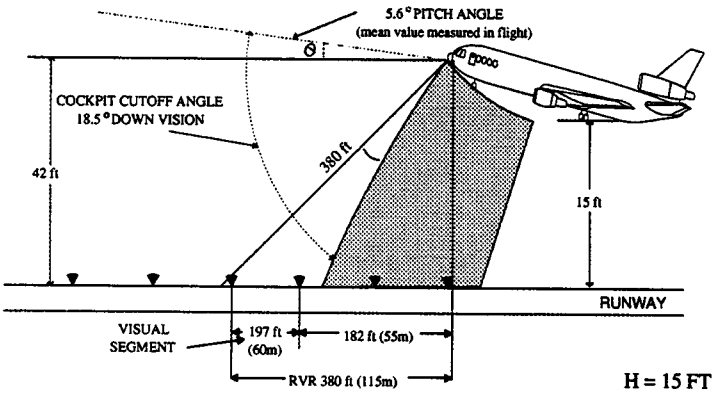

[PAGES 4-165 THROUGH 4-172 RESERVED]

4000 (3/4 statute mile VIS or RVR 3500 for helicopters) are based on the use of ground-based visual aids to enhance seeing-conditions during the final stages of approach and landing operations (deceleration for helicopters). These reductions are known as lighting system credits and cannot be used to reduce operating minimums for circling maneuvers due to the large area required for safe maneuvering (turn radius) at the various speeds used. Therefore, operating minimum reductions based on lighting credits can only be authorized for instrument approaches to runways that provide a straight-in landing capability. The standard minimum IFR altitudes cannot be reduced due to obstacle limitations and/or NAVAID signal limitations. As such, reductions in operating minimums below the basic values established for each NAVAID are expressed only as reductions in the visibility/RVV/RVR required to safely conduct the approach. The minimums for the various NAVAID's and lighting system combinations are specified in U.S. TERPS and in paragraph C53 and H103 of the operations specifications.

B. Nonprecision Straight-In Minimums. The lowest permissible minimums for Categories A, B, and C aircraft during the conduct of straight-in nonprecision instrument approach procedures (IAP) are HAT 250 and 1/2 statute mile VIS or RVR 2400. The lowest permissible minimums for Category D airplanes conducting straight-in nonprecision instrument approach procedures are HAT 250 and 1 statute mile VIS or RVR 5000. The lowest permissible minimums for helicopters operated at 90 knots or less are HAT 250 and 1/4 statute mile VIS or RVR 1600. These minimums for helicopters operated at more than 90 knots are HAT 250 and 1/2 statute mile VIS or RVR 2400. These minimums are the lowest authorized for nonprecision approaches that are restricted to runways that are equipped with MALSR, SSALR, ALSF-1, or ALSF-2 approach lighting systems.

C. Precision Straight-In Minimums. The lowest permissible minimums for all airplanes conducting straight-in precision instrument approach procedures are HAT 200 and RVR 1800. The lowest permissible minimums for helicopters is 1/4 statute mile VIS or RVR 1200. These basic minimums are the lowest authorized for precision approaches and are restricted to runways that are equipped with a lighting system consisting of touchdown zone and centerline lights and MALSR, SSALR, and ALSF-1 or ALSF-2 approach lighting systems.

541. BASIC AIR CARRIER OPERATING MINIMUMS. Although FAR Part 97 establishes standard minimums for the various NAVAID's and lighting system combinations, these standard minimums cannot be automatically used by FAR Parts 121 and 135 certificate holders. Two classes of operating minimums are established for FAR Parts 121 and 135 operators. These classes of operating minimums are "basic air carrier minimums" and "standard minimums." For the purposes of this handbook, the basic air carrier minimums include high-minimum PIC requirements and basic turbojet requirements. These basic air carrier minimums are usually higher than the standard minimums prescribed by FAR Part 97 for the various NAVAID's and lighting system combinations. The basic air carrier minimums must be used by all FAR Parts 121 and 135 operators until the requirements for special airborne equipment, pilot qualification, pilot training, and/or experience requirements for standard operating minimums are met. The POI may then authorize the certificate holder to use the standard operating minimums. "Standard operating minimums," as used in this handbook, are the set of minimums that have been called "lower than standard minimums" in Advisory Circular (AC) 120-29, "Criteria for Approving Category I and Category II Landing Minima for FAR 121 Operators," and in previous versions of the operations specifications.

A. High Minimum PIC. The degraded seeing-conditions and increased difficulty in piloting tasks encountered during CAT I approach and landing operations make it necessary for PIC's to acquire a certain amount of flight experience before operating to the lowest authorized CAT I minimums. The objective of this flight experience requirement is to ensure that the pilot is fully aware of the aircraft's equipment capabilities and limitations, the available external visual cues, and the aircraft's handling characteristics.

(1) Increased Operating Minimums. The flight experience necessary to meet this objective is specified in FAR § 121.652 or FAR § 135.225(d), as applicable. High minimum PIC requirements for FAR Part 135 operations are applicable only to turbine-powered airplanes (turbojet or turbopropeller). These rules require those PIC's who do not meet these experience requirements (high minimum PIC's) to increase the published MDA/DH by 100 feet and the published VIS/RVV by 1/2 statute mile or the RVR equivalent. The RVR that must be used when an RVR is published and available is the applicable high-minimum-PIC-RVR value specified in paragraph C54 of the operations specifications. The increased operating minimums for high-minimum PIC's always result in operating minimums that are higher than standard minimums. For example, if the minimums published for an ILS approach to a certain runway are HAT 200/RVR 1800, the operating minimums that must be used by a high-minimum PIC for an approach to that runway must not be lower than HAT 300 and RVR

4500 (HAT 200 + 100 feet and the high-minimum PIC equivalent of RVR 1800, which is RVR 4500, as specified in paragraph C54 of the operations specifications). If the minimums published for a precision approach were HAT 200 and a VIS of 3/4 statute mile, the high-minimum PIC would have to use a HAT of 300 and a VIS of 1-1/4 statute miles. Therefore, when dispatching or releasing a flight, the increased operating minimums for high-minimum PIC's and the reported and/or forecasted weather conditions at the destination airport must be considered.

(2) Specific Operating Rule Provisions. FAR § 121.652 and FAR § 135.225(d) are similar; however, significant differences exist in the specific details of these rules.

(a) FAR § 121.652. This rule applies to all airplanes operated under FAR Part 121. It raises high-minimum PIC operating minimums by HAT 100 feet and visibility by 1/2 statute mile or by the RVR equivalent. The high-minimum, PIC-RVR equivalents are specified in the operations specifications. The rule specifies that the MDA or DH and visibility minimum required for a high-minimum PIC does not have to be raised above the conditions required to designate the airport as an alternate airport. The new method for determining alternate minimums, however, is to add a buffer to the HAT/HAA and visibility or RVR authorized for landing. This method negates the provision of this rule since alternate minimums will always be higher than the high-minimum PIC's landing minimums. The landing minimums for high-minimum PIC's at destination airports are always determined by adding 100 feet to the HAT/HAA and 1/2 statute mile to the visibility authorized for landing or by using the high-minimum, PIC-RVR equivalents in paragraph C54 when RVR is available. This rule establishes HAT 300 feet and 1 statute mile (or the RVR equivalent as low as RVR 4500) as the lowest straight-in precision approach operating minimums for high-minimum PIC's. This rule also establishes HAT 300 and 1 statute mile (or the RVR equivalent as low as RVR 5000) as the lowest straight-in nonprecision approach operating minimum for high-minimum PIC's. This rule also permits the 100-hour flight experience requirement to be reduced by up to 50% by substituting one landing for 1 required hour of flight experience, provided the PIC has at least 100 hours' PIC time in another type of airplane in FAR Part 121 operations.

(b) FAR § 135.225(d). This rule applies only to turbine-powered (turbojet and turbopropeller) airplanes. It raises operating minimums for high-minimum PIC's by HAT 100 feet and visibility by 1/2 statute mile. When RVR minimums are published and RVR reports are available, the high-minimum, PIC-RVR equivalent values specified in the operations specifications must be used. The operating minimums for FAR Part 135 high-minimum PIC's are the same as those for FAR Part 121 PIC's (see subparagraph 541 A(2)(a)). The rule also specifies that the MDA or DH and visibility minimums required for high-minimum PIC's does not have to be raised above the ceiling and visibility requirements for the airport to be designated as an alternate airport. The new method for determining alternate minimums, however, negates this provision of this rule (see discussion in subparagraph 541 A(2)(a)). This rule does not permit a reduction to the 100-hour flight experience requirement.

B. Basic Turbojet Minimum. A basic turbojet VIS/RVR operating minimum has been established for all turbojet airplanes operated under FAR Parts 121 and 135. The basic turbojet minimum for straight-in nonprecision and precision approaches is 3/4 statute mile visibility or RVR 4000. Any minimum less than the basic turbojet minimum is not authorized in turbojet aircraft until special requirements are met. When the airplane equipment, the runway lighting/marking systems, and the pilots are in compliance and qualified in accordance with AC 120-29 (as amended) and this handbook, the lowest minimums that have been established for various approved approach and runway lighting/marking configurations may be authorized. The turbojet minimums for each of the approved approach and runway lighting/marking configurations are specified in paragraphs C53 and C54 of the operations specifications.

543. STANDARD AIR CARRIER OPERATING MINIMUMS. Standard operating minimums are established in FAR Part 97 for the various combinations of NAVAID's and visual systems used for AWTA operations. Air carriers can be authorized to use standard circling minimums in accordance with paragraph C53 and/or H103 of the operations specifications (see paragraph 543A). An air carrier can also be authorized to use the standard minimums for straight-in precision and nonprecision approaches when all of the high-minimum PIC and, if applicable, basic turbojet requirements have been met. These requirements include special airborne equipment, and special pilot training, qualification, and/or special operating experience (see paragraph 541 and AC 120-29).

A. Standard Minimums for Circling Maneuvers. The minimums for these maneuvers are based on the highest speed used during a particular circling maneuver. The highest speed to be flown (speed category)

CHAPTER 5. AIR AMBULANCE OPERATIONS

SECTION 1. BACKGROUND AND DEFINITIONS

1335. INTRODUCTION. This chapter contains background information on air ambulance operations (previously known as "emergency medical services"). It also contains information, direction, and guidance to be used by inspectors and principal operations inspectors (POI) when evaluating an operator's air ambulance procedures, general operations manual (GOM), or the unique requirements an operator must meet prior to being issued operations specifications paragraph A21a, "Air Ambulance—Helicopter"; or paragraph A21b, "Air Ambulance—Airplane." This chapter also contains specific crew training requirements and operational procedures for both airplane and helicopter air ambulance operations. A sequential breakdown of this chapter follows:

NOTE: Presently, the Operations Specifications Subsystem (OPSS) software will not provide the current paragraph A21, "Air Ambulance Operations." Until the software can be updated, it will be necessary for POI's to make manual revisions to the operations specifications. The guidance in volume 3, paragraph 103, is no longer valid and will be updated in a forthcoming change to 8400.10.

A. Section 1 contains general background information, such as air ambulance operations specifications, and definitions of the terms used in this chapter.

B. Section 2 contains guidance for inspectors when evaluating an operator's request to be issued Federal Aviation Regulations (FAR) Part 135 air ambulance service operations specifications.

C. Section 3 contains special operational procedures pertaining to FAR Part 135 air ambulance helicopter or airplane services.

D. Section 4 contains guidance to be used by inspectors when evaluating a FAR Part 135 operator's air ambulance training program.

1337. OPERATORS REQUIRING AIR AMBULANCE OPERATIONS SPECIFICATIONS PARAGRAPHS. The unique association of the aviation and medical professions has formed a technically sophisticated system of life-sustaining care for ill or injured passengers during air transportation. Air ambulance operators have met the public need and demand for such services by equipping and dedicating aircraft specifically for this purpose. Flight Standards Service, in consultation with pioneering air ambulance operators, has created specific operations specifications paragraphs to clarify the means these operators will use to comply with safety and regulatory requirements while conducting air ambulance operations.

A. Regulatory Requirements. An air ambulance operator must comply with all requirements of the FAR Part under which the operator is certified. Air ambulance operators are not exempted from any requirement of the FAR by reason of conducting air ambulance operations. To ensure industry standardization and a clear understanding between the FAA and air ambulance operators, operations specifications paragraphs A21a and A21b contain the specific means by which air ambulance operators can comply with the FAR. Some of these rules are as follows:

(1) Certification Under a FAR Part. An air ambulance operator must be certified under either FAR Part 121 or FAR Part 135 and comply with all provisions of the Part under which the operator is certified. Special Federal Aviation Regulations (SFAR) 38-2 specifies the FAR Part under which an operator must be certified on the basis of the type and size of aircraft the certificate holder operates.

(2) Certification Under FAR Part 121. All helicopter operations must be conducted under FAR Part 135. At the time of this writing, all air ambulance operations with airplanes are being conducted under FAR Part 135. The information, direction, and guidance contained in this chapter applies to operations under FAR Part 135. In the future, an operator may request to conduct air ambulance operations with an airplane requiring operations under FAR Part 121. In such cases, the POI of a FAR Part 121 operator who receives the request from the assigned operator for issuance of the air ambulance operations specifications paragraph should contact AFS-200 through the applicable regional office for direction and guidance.

B. Advertising. According to FAR § 135.31, an operator may not advertise or conduct an operation unless authorized to do so by the operator's operating

certificate and operations specifications. After January 1, 1993, an operator may not conduct air ambulance operations unless the operator has an operations specifications authorization.

C. Operators Requiring Air Ambulance Operations Specifications Paragraphs. An operator who holds out to the public to provide basic or advanced in-flight life support services during air transport must have been issued the appropriate air ambulance operations specifications paragraph before conducting such operations. Operators may or may not overtly advertise their services. For example, hospital-based air ambulance services must also hold air ambulance operations specifications even though they do not advertise. Operators holding FAR Part 135 operations specifications without paragraphs A21a or A21b may transport medical personnel as passengers who are accompanying a sick or injured person, but must meet the following requirements:

(1) They may not advertise air ambulance or in-flight patient care services.

(2) Any in-flight patient care equipment and medical personnel that accompany the passenger must be provided by the passenger.

(3) The patient-care equipment must not require modification to the aircraft, such as the removal of seats.

(4) The patient-care equipment must not be required for basic or advanced life support.

NOTE: Air ambulance operations are not conducted under emergency authority. When a life-threatening situation exists, a pilot-in-command (PIC) may declare an emergency in accordance with FAR §§ 91.3, 121.557, or 135.19 and transport a sick or injured person. The PIC who takes such actions must report the actions to the Federal Aviation Administration (FAA). The inspector investigating such a report should determine whether the information available to the operator and PIC at the time the flight began indicated that a life-threatening emergency existed and that a suitably equipped air ambulance was not available within the time acceptable to the best medically qualified person available.

D. Terminology. Standardized terminology has become necessary due to the growth of helicopter and airplane air ambulance services. The term "aeromedical operations" as associated with operations specifications has been replaced with the term "air ambulance-helicopter" or "air ambulance-airplane," as applicable. POI's whose operators' operations specifications paragraphs contain the term "aeromedical operations" should amend their operators' operations specifications.

1339. DEFINITIONS. The following terms are defined according to their use in this handbook:

- Medical Personnel: Those persons trained in air-medical environment, who perform medical duties in an air ambulance operation.
- Basic Life Support (BLS) System: The medical personnel and equipment required to provide basic life support to patients (such as oxygen, suction, electrical supply, lighting and climate control) and equipment that provides for air-to-ground medical communications when applicable.
- Air Ambulance: An aircraft equipped with at least a basic life support (BLS) system.
- Air Ambulance Service: The operation of an aircraft equipped as an air ambulance in air transportation service.
- Local Flying Area: An area designated by the operator in which air ambulance services will be conducted. Each local flying area should be defined in a manner acceptable to both the operator and the POI, taking into account the operating environment and geographic terrain features and capabilities of the aircraft.
- Emergency Medical Service (EMS): The term "emergency medical service" has been replaced with the term "air ambulance."
- Response Scene: The location to which an air ambulance has been dispatched for an air ambulance flight.

1341. OVERVIEW OF HELICOPTER AIR AMBULANCE SERVICES. Paragraph A21a of the operations specifications authorizes air ambulance-helicopter service for hospital-to-hospital patient transfer work, accident scene work, offsite (unimproved site) work, or emergency evacuation facility patient pick-ups. A trend of weather-related accidents during aeromedical operations resulted in the inclusion of weather limitations for visual flight rules (VFR) flight with these operations specifications (see volume 3, chapter 1, section 1, of this handbook for additional background information on operations specifications).

A. Paragraph A21a Authorizations. Paragraph A21a of the operations specifications grants latitude to a helicopter operator for landing site selection as well as the authority to land on appropriate sites during both day and night in air ambulance operations.

(1) Higher Minimums. The authorization to conduct helicopter air ambulance operations is based on the operator's using higher ceiling and visibility minimums in uncontrolled airspace than is required for conventional FAR Part 135 operations.

(2) Night Landings. Night landings at unimproved sites are permitted with adequate lighting for the pilot to identify the landing site and surrounding hazards.

NOTE: "Adequate" lighting is lighting that allows a helicopter pilot to conduct a safe terrain and obstacle collision avoidance approach and landing during conditions of darkness. The source of this lighting may be on the helicopter or on the surface and includes the possibility of automobile lights being used to illuminate the landing site. Pyrotechnic road hazard flares are not recommended for marking the touchdown area.

(3) Local Flying Area. The operator must define a local flying area for each base of operation, and the description of the area must be entered in operations specifications paragraph A21a.

NOTE: The dimensions of the local area should be that which an operator could service adequately with a helicopter, taking into account the terrain features and capabilities of the helicopter. The descriptions in an operator's operations specifications should be easy to understand and define; for example, a part of a state or a dimensional distance, such as a 100-mile radius of base.

B. Instrument Flight Rules (IFR) and VFR Requirements. Operators of helicopter air ambulance operations must comply with the following requirements for IFR and VFR:

(1) IFR Operations. POI's of helicopter air ambulance operators conducting IFR operations should carefully evaluate the operator's procedures, training and qualification program, and the operating environment before granting the operator the authority to conduct single-pilot IFR operations with an autopilot.

(2) VFR Operations. When conducting VFR flight, the operator must comply with the weather minimums as specified in paragraph A21a. Operator requests for lower VFR minimums than specified in paragraph A21a must be coordinated with AFS-250 through the regional office.

(3) Training for Stress-Related Issues. Flightcrews may experience high stress levels in air ambulance service operations due to the potential urgency for responding to emergencies related to preserving human life. POI's should ensure that operators give adequate attention to crew resource management (CRM) training to prevent inappropriate actions and decisions during periods of stress. One acceptable means operators may use to guard against inappropriate decisions is to require that both the individual exercising operational control and the PIC agree that the flight can be safely initiated and continued under the present conditions.

C. Flight and Rest Time. Operators may choose to schedule crews under one of several rules. In some cases, operators may conduct operations at different locations under different rules. The operator's GOM must contain the specific method to be used and how records are to be kept to show compliance with the rule used. POI's shall add a statement to paragraph A21a of the operator's operations specifications that lists the specific section of the operator's GOM that contains these procedures.

1343. OVERVIEW OF AIRPLANE AIR AMBULANCE SERVICES. Operations specifications paragraph A21b specifies operational requirements and grants the operator authorization of air ambulance—airplane service. The major requirement of paragraph A21b is that the operator's flight crewmembers must be adequately trained in the special requirements of air ambulance operations.

A. Flightcrew Training. POI's must ensure that an air ambulance—airplane operator trains the flightcrew in the following areas:

- To be capable of interfacing effectively with medical personnel
- To be cognizant of potential stress placed on the patient in various realms of flight, such as unpressurized flight, extreme temperature gradients, or turbulence
- To be able to respond well when under high levels of stress when emergencies related to preserving human life create urgent situations (In response to such stresses, operators must train flightcrews not to jeopardize the safety of either themselves, in-flight medical personnel, or the public.)
- In CRM and operational control procedures to prevent the flightcrew from inappropriate actions and decisions during periods of stress
- In the special communication capabilities for accommodating medical care during flight and/or to coordinate with destination medical personnel

B. IFR and VFR Training. POI's should encourage air ambulance operators to qualify flightcrews to conduct both IFR and VFR operations. POI's of air ambulance operators conducting IFR operations should carefully evaluate the operator's procedures, training and qualification program, and the operating environment before granting the operator the authority to conduct single-pilot IFR operations with an autopilot.

1345. FAA POLICY REGARDING "COMPENSATION OR HIRE" CONSIDERATIONS FOR CHARITABLE FLIGHTS OR LIFE FLIGHTS. Various organizations and pilots are conducting flights that are characterized as "volunteer," "charity," or "humanitarian." These flights are referred to by numerous generic names, including "lifeline flights," "life flights," "mercy flights," and "angel flights." These types of flights will be referred to as "life flights" in this section.

A. Purposes for Life Flights. The types of organizations and pilots involved with or conducting life flights vary greatly. The most common purpose of life flights is to transport ill or injured persons who cannot financially afford commercial transport to appropriate medical treatment facilities, or to transport blood or human organs. Other "compassionate flights" include transporting a child to visit with a dying relative, or transporting a dying patient to return to the city of the patient's birth.

B. FAA Policy. The FAA's policy supports "truly humanitarian efforts" to provide life flights to needy persons (including "compassionate flights"). This also includes flights involving the transfer of blood and human organs. Since Congress has specifically provided for the tax deductibility of some costs of charitable acts, the FAA will not treat charitable deductions of such costs, standing alone, as constituting "compensation or hire" for the purpose of enforcement of FAR § 61.118 or FAR Part 135. Inspectors should not treat the tax deductibility of costs as constituting "compensation or hire" when the flights are conducted for humanitarian purposes.

1346.–1354. RESERVED.

[PAGES 4-763 THROUGH 4-774 RESERVED]

CHAPTER 5. AIR AMBULANCE OPERATIONS

SECTION 2. AUTHORIZATIONS FOR FAR PART 135 AIR AMBULANCE SERVICES

1355. GENERAL. This section contains guidance to be used by principal operations inspectors (POI) when evaluating a Federal Aviation Regulations (FAR) Part 135 operator's request to be issued operations specifications paragraph A21a, "Air Ambulance—Helicopter" or paragraph A21b, "Air Ambulance—Airplane."

A. Certification of New Operators. A district office may receive a request from an individual who does not currently hold a certificate to be certified as an air ambulance operator. In this case, inspectors must follow the policies, direction, and guidance in volume 2, chapter 2, of this handbook. Inspectors should refer to sections 3 and 4 of this chapter to obtain policies, direction, and guidance for evaluating an air ambulance operator during phases two, three, and four of the certification process.

B. Existing Operators Initiating Air Ambulance Operations. Existing operators may request that POI's issue operations specifications paragraph A21a or paragraph A21b. POI's should consider a request to conduct air ambulance operations as a potentially significant change in the certificate holder's operation. POI's of such operators shall conduct a partial recertification of the operator in accordance with this section.

C. Relevant Documents. The inspector conducting a certification or recertification of an air ambulance operator should become familiar with the contents of the following documents and should bring these documents to the attention of the operator:

- Volume 2, of this handbook, "Air Operator Certification"
- Volume 3, chapter 1, section 7, of this handbook, "Amendment, Surrender, and Suspension of Operations Specifications"
- Advisory Circulars (AC) 135.14 and 135.15, "Emergency Medical Services /Airplane or Helicopter"
- "Air Ambulance Guidelines" published by both the U.S. Department of Transportation, National Highway Traffic Safety Administration; and the American Medical Association, Commission on Emergency Medical Services
- AC 120.49, "Certification of Air Carriers"
- Volume 3, chapter 2 of this handbook, "Flightcrew Training and Qualification Programs"
- Volume 3, chapter 15, of this handbook, "Manuals, Procedures, and Checklists"

1357. EXISTING OPERATORS INITIATING AIR AMBULANCE OPERATIONS. POI's shall use the following direction and guidance when issuing paragraphs A21a or A21b of the operations specifications to existing operators.

A. Initial Phase. In the initial phase, the POI and the operator should meet to decide what documents the operator must create or modify and what proving or verification tests the operator must conduct. The POI must coordinate with the principal maintenance and avionics inspectors when scheduling this meeting.

(1) The POI shall inform the operator of the requirement to prepare a new compliance statement. The operator should review each rule of FAR Part 135 and indicate those rules under which changes in the operator's compliance procedures will be required while conducting air ambulance operations. For those rules requiring no change, the POI may accept a simple statement such as "No change."

(2) The POI shall review the applicable air carrier certification job aids (see figures 2.1.1.1. through 2.1.1.3.), to determine the actions required. The "Date item accomplished/ ready for FAA insp." column of the job aid should be marked "N/A" for those items that will not be required. The POI should retain a copy of the job aid, and one should be given to the operator. The principal inspectors should coordinate informally with the regional office at this stage to ensure that all requirements have been identified. The regional office should coordinate with AFS-500 for additional guidance, if required.

(3) The POI and the operator should come to a mutual agreement on the documents listed in volume

2, paragraph 85, that the operator will be required to provide or modify.

(4) Specific areas that should be reviewed include the following:

- Development of the air ambulance procedures section of the operator's general operations manual (GOM)
- Development of a flight manual and checklists appropriate to air ambulance operations
- Development of the air ambulance section of the operator's training and qualification program
- Exploration of the requirement for OST Form 4507, "Air Taxi Operator and Commuter Air Carrier Registration and Amendments Under Part 298 of the Regulations of the Department of Transportation"

B. Formal Application Phase. The operator must submit a letter requesting issuance of the appropriate operations specifications paragraphs, the new compliance statement, and those attachments listed in volume 2, paragraph 85, which have been determined to be applicable in the previous phase.

C. Document Compliance Phase. Prior to conducting this phase, inspectors should review the contents of volume 2, section 3. Inspectors should also refer to the direction and guidance of sections 3 and 4 of this chapter while conducting the required evaluations.

D. Demonstration and Inspection Phase. In this phase, only the applicable events of the job aid have to be accomplished. Inspectors should review volume 2, section 4, of this handbook for guidance when accomplishing this phase. Since unique circumstances surround each recertification, the POI shall informally coordinate with the regional office before closing this phase. Specific criteria and procedures for inspectors to use when evaluating an operator's demonstrated ability are located in sections 3 and 4 of this chapter. These demonstrations include but are not limited to the following:

- Training in air ambulance procedures
- Emergency evacuations
- Air navigation under air ambulance operating procedures
- Operational control procedures

E. Certification Phase. Inspectors should review the contents of volume 2, section 5, before concluding the certification phase.

1358.–1368. RESERVED.

[PAGES 4-777 THROUGH 4-788 RESERVED]

CHAPTER 9. LOW VISIBILITY TAXI OPERATIONS

SECTION 1. BACKGROUND AND RESPONSIBILITIES

1775. GENERAL. This section contains guidance to be used by inspectors for implementing procedures concerning low visibility taxi operations as contained in Advisory Circular (AC) 120-57, "Surface Movement Guidance and Control System"; and the responsibilities of air carriers and Federal Aviation Administration (FAA) field personnel to implement low visibility taxi operations as developed for each appropriate airport in accordance with the AC.

1777. BACKGROUND. Ground movement of equipment and aircraft during periods of visibility of less than 1,200 feet runway visual range (RVR) has become more common as ground navigational aids (NAVAID) and onboard aircraft systems have advanced. Recent ground accidents and incidents during taxi in low visibility conditions point to the need to improve taxi guidance and control systems. AC 120-57 provides guidance for the development and implementation of a surface movement guidance and control system (SMGCS) and an SMGCS plan for each airport where reduced visibility taxi is to be authorized. Each SMGCS plan contains operational procedures for taxi during periods of low visibility. These procedures are documented in the SMGCS as flightcrew information and low visibility taxi route chart guidance for a specific airport. The SMGCS chart and its related plan are developed and maintained by the airport operator in consultation with users and the FAA through SMGCS working group activity.

1779. APPLICABILITY. AC 120-57, in conjunction with Federal Aviation Regulations (FAR) Part 139 and other related AC's and orders, applies to all airports seeking approval for takeoff and landing operations below 600 feet RVR and for all airports seeking initial Category III (CAT III) landing approvals. All airports conducting operations below 1,200 feet RVR should develop an SMGCS in accordance with the guidance in AC 120-57. Air carriers that operate during periods of low visibility at airports that require an SMGCS shall operate in accordance with the developed procedures.

1781. AIR CARRIER RESPONSIBILITIES. Air carriers shall include SMGCS procedures in their operations manuals for all applicable airfields. Aircrew indoctrination, initial, and recurrent training programs shall include low visibility taxi procedures where applicable.

1783. FAA RESPONSIBILITIES. As described in AC 120-57, each SMGCS working group, led by the airport operator, should contain membership of the local air traffic control (ATC) facility; the local FAA airports office (district or regional); the regional office (Flight Procedures Branch and appropriate Flight Standards District Office (FSDO)); and the appropriate FAA airway facilities (sector or regional).

A. Flight Standards.

(1) Controlling Region—Flight Procedures Branch. This office will coordinate the evaluation of the SMGCS plan to determine applicability to the criteria set forth in existing FAA orders and AC's (including AC 120-57), and monitor adherence to the plan under its purview through the appropriate FSDO.

(2) Flight Standards District Office. This office will ensure that air carriers operating during periods of low visibility at airports requiring an SMGCS are addressing appropriate items in the SMGCS plan through inclusion in operations manuals and appropriate training programs. Required operations information will include flightcrew information and airport low visibility taxi route chart guidance. The FSDO shall monitor adherence to SMGCS and its plan by the airport and air carriers operating at the airport. The FSDO shall also advise the regional Flight Procedures Branch of any deviations or deficiencies.

(3) Principal Operations Inspectors (POI) of FAR Parts 121, 125, 129, and 135 Operators. POI's are required to take four actions. The accomplishment of each of these actions should be recorded under the Program Tracking and Reporting Subsystem (PTRS) activity number 1380, and "SMGCS" should be placed in the "National Use" block. The four required actions are as follows:

- Bring to the attention of assigned operators the information contained in this chapter

- Ensure that operators are training flight crewmembers about the information/guidance contained in the SMGCS plan
- Ensure that each operator has provided flight crewmembers with adequate procedures for compliance with low visibility taxi requirements
- Determine through an operational control inspection or other means that the operator has acceptable procedures for the acquisition and dissemination of all required flight information to flight crewmembers

(4) Headquarters. The Technical Programs Division (AFS-400) shall be the final approving authority for all SMGCS plans and shall review evaluation reports to determine the appropriateness of authorizing low visibility operations.

B. Air Traffic Control. ATC shall adhere to those sections of the SMGCS plan that are under its control. Deficiencies observed or brought to its attention should be corrected.

C. Airport Office (District or Regional). This office shall review the sections of the SMGCS plan for which it is responsible and notify the appropriate organization(s) of any deficiencies through the evaluation report.

1784.–1794. RESERVED.

[PAGES 4-1143 THROUGH 4-1152 RESERVED]

CHAPTER 9. LOW VISIBILITY TAXI OPERATIONS

SECTION 2. IMPLEMENTATION AND SURVEILLANCE

1795. GENERAL. This section contains guidance to be used by inspectors for implementation and surveillance of low visibility taxi operations.

1797. IMPLEMENTATION. Principal operations inspectors (POI) of Federal Aviation Regulations (FAR) Parts 121, 125, 129, and 135 operators should confirm that the following actions have been accomplished by the operators that wish to utilize low visibility taxi operations at approved surface movement guidance and control system (SMGCS) airports:

- Air carrier operations manuals include SMGCS procedures for all applicable airfields
- Aircrew indoctrination, initial, and recurrent training programs include low visibility taxi procedures where applicable
- Operators are providing adequate information/guidance contained in SMGCS plans, required communication and coordination, and the use of low visibility chart guidance to crewmembers
- Operators have acceptable procedures for the acquisition and dissemination of all required information to flight crewmembers

1799. SURVEILLANCE. Inspectors should monitor their operators by using normal surveillance procedures. Geographic inspectors should advise POI's of any discrepancies by using "SECTION IV—COMMENT SECTION" of the Program Tracking and Reporting Subsystem (PTRS).

1800.–1810. RESERVED.

[PAGES 4-1154 THROUGH 4-1164 RESERVED]

VOLUME 5. TABLE OF CONTENTS

AIRMAN CERTIFICATION AND DESIGNATED EXAMINERS

Page

CHAPTER 1. DIRECTION, GUIDANCE, AND PROCEDURES

Section 1. General Information

1. Applicability 5-1
3. Individuals Authorized to Conduct Certification 5-1
5. Inspector and Examiner Qualifications 5-1
7. Job Aids 5-1
9. Surveillance During Certification 5-2
11. Inspector Preparation 5-2
13. Testing Policies 5-2
15. Aircraft Operating Manuals 5-3
17. Testing Sequence and Time Limits 5-3
18.-26. Reserved 5-3

Section 2. Phases of Certification

27. Application Phase 5-7
28. Verification of Applicant's Identity 5-7
29. Instructions for Completing Application Forms 5-8
31. Oral Test Phase 5-11
33. Flight Test Phase 5-12
35. Documentation Phase 5-14
37. FAA Form 8060-4, "Temporary Airman Certificate" 5-14
39. FAA Form 8060-5, "Notice of Disapproval of Application" 5-15
41. Completion of FAA Form 8000-36, PTRS Data Sheet 5-15
43. District Office Responsibilities 5-16
44.-50. Reserved 5-17

CHAPTER 2. AIRLINE TRANSPORT PILOT CERTIFICATES

Section 1. Application Phase—Airplanes and Helicopters

51. Applicability 5-37
53. Eligibility for the ATP Written (Knowledge) Test 5-37
55. Flight Experience Requirements for the Airplane Category 5-38
57. ICAO Restrictions 5-38
59. Flight Experience Requirements for the Rotorcraft Category 5-39
61. Experience Verification for Oral and Flight Tests 5-39
63. Eligibility Requirements Common to Both the Oral and Flight Test Phases 5-40
65. Extending Validity Period of Knowledge Test Results 5-40
67. Specific Eligibility Requirements for the Oral Test 5-41
69. Specific Eligibility Requirements for the Flight Test 5-41
70.-74. Reserved 5-41

Section 2. Flight Test Events in Airplanes

75. Applicability 5-51
77. Oral Test Events 5-51
79. Waiver Authority 5-51
81. Preparation and Surface Operations Events 5-51

VOLUME 5. TABLE OF CONTENTS—Continued

		Page
83.	Takeoff Events	5-52
85.	Climb, En Route, and Descent Events	5-53
87.	Approach Events	5-55
89.	Landing Events	5-58
91.	Missed Approach Events	5-59
93.	Normal and Abnormal Procedures	5-59
95.	Emergency Procedure Events	5-60
97.	Standards of Acceptable Performance	5-60
98.-104.	Reserved	5-60
Section 3.	Conduct of Flight Tests in Airplane Flight Simulators and Training Devices	
105.	Acceptable Methods for Accomplishing an Airplane Flight Test	5-69
107.	Selection of Flight Test Job Aids	5-69
109.	Planning a Flight Simulator or Training Device Flight Test Segment	5-70
111.	Applicant Briefing	5-71
113.	Supporting Crewmembers	5-71
115.	Conducting a Flight Test in a Flight Simulator or Training Device	5-71
117.	Debriefing	5-72
118.-122.	Reserved	5-72
Section 4.	Conduct of Flight Tests in an Airplane	
123.	Airplane Training Before Airplane Flight Tests	5-87
125.	Planning the Flight	5-87
127.	Events Required in an Airplane Flight Test	5-87
129.	Preflight Briefing	5-88
131.	Crew Qualifications	5-88
133.	Vision Restriction Devices	5-88
135.	Conduct of the Flight Test in an Airplane	5-88
137.	Safety	5-89
139.	Modification of Events	5-89
141.	Debriefing	5-89
142.-144.	Reserved	5-89
Section 5.	Oral and Flight Test Events in Helicopters	
145.	Description of Specific Events	5-97
147.	Waiver or Modification of Flight Test Events	5-97
149.	Preparation and Surface Operation Events	5-97
151.	Takeoff Events	5-97
153.	Climb, En Route, and Descent Events	5-98
155.	Approaches to Landings	5-99
157.	Landing Events	5-100
159.	Missed Approach Events	5-100
161.	Normal and Abnormal Procedure Events	5-101
163.	Emergency Procedure Events	5-101
165.	Standards of Acceptable Performance	5-101
166.-170.	Reserved	5-102
Section 6.	Conduct of Flight Tests in a Helicopter	
171.	Training Required Before Flight Test	5-113
173.	Planning the Flight Test	5-113
175.	Events to be Evaluated During a Helicopter Oral Test and Flight Test	5-113
177.	Preflight Briefing	5-113
179.	Crew Qualifications	5-113

VOLUME 5. TABLE OF CONTENTS—Continued

Page

181. Vision Restriction Devices 5-113
183. Conduct of the Flight Test 5-113
185. Safety 5-114
187. Debriefing 5-114
188.-194. Reserved 5-114

Section 7. Documentation Phase—All Aircraft

195. Successful Applicants of Oral Tests and First Segments of Two-Segment Flight Tests 5-121
197. Documentation of Successfully Completed Flight Tests 5-121
199. Documentation of Failed Oral Tests or Flight Tests 5-122
201. Incomplete Tests 5-122
202.-220. Reserved 5-123

CHAPTER 3. FLIGHT ENGINEER CERTIFICATE AND CLASS RATINGS

Section 1. Application Phase

221. Applicability 5-133
223. Eligibility for the Flight Engineer Written (Knowledge) Test 5-133
225. Eligibility for the Oral Test 5-134
227. Requirements to Extend the Validity Date of an Airman Knowledge Test 5-135
229. Eligibility for the Flight Test 5-135
231. Time Limits for the Testing Process 5-136
232. Retesting Applicants with Passing Scores 5-136
233. Endorsement of Flight Engineer Applicants Retesting Within 30 Days of Failure 5-136
234.-238. Reserved 5-137

Section 2. Oral and Flight Tests

239. Oral Test Events 5-145
241. Oral Test Standards 5-145
243. Acceptable Methods of Accomplishing Flight Tests 5-145
245. ATA Exemption 5-145
247. Conduct of an FE Flight Test 5-146
249. Flight Test Events 5-147
251. Standards of Performance 5-148
253. Planning a Simulator Flight Test Segment 5-148
255. Applicant Briefing 5-148
257. Supporting Crewmembers 5-149
259. Conducting a Flight Test in a Simulator 5-149
261. Conducting a Flight Test in an Airplane 5-149
263. Debriefing 5-150
264.-268. Reserved 5-150

Section 3. Documentation Phase

269. Successful Applicants of Oral Tests and First Segments of Two-Segment Flight Tests 5-161
271. Successful Completion of the Entire Flight Test 5-161
273. Documentation of Failed Oral Tests or Flight Tests 5-162
275. Incomplete Tests 5-162

VOLUME 5. TABLE OF CONTENTS—Continued

Page

276.-284. Reserved 5-162

CHAPTER 4. AIRCRAFT DISPATCHER CERTIFICATES

Section 1. General Information

285. General 5-171
287. Designation of District Offices and Inspectors 5-171
289. Eligibility for Written Test 5-171
291. Eligibility for the Practical Test 5-171
293. Practical Test 5-172
295. Successful Applicants 5-174
297. Unsuccessful Applicants 5-174
299. Supervisory Responsibility 5-175
300.-350. Reserved 5-175

CHAPTER 5. AIR TRANSPORTATION DESIGNATED EXAMINERS

Section 1. General

351. General 5-195
353. Overview of Different Types of Examiners 5-195
355. Guidance for Managers When Designating Examiners 5-195
357. Designated Examiner Authority and Responsibilities 5-197
359. Supervising Inspector Responsibilities 5-198
361. Office Manager Responsibilities 5-199
363. Regional Flight Standards Division (RFSD) Responsibilities 5-199
364.-374. Reserved 5-199

Section 2. Administration of Designated Examiner Programs

375. Selection of Examiners 5-215
377. Examiner Training and Evaluation 5-215
379. Supervision and Administrative Control of Designated Examiners 5-216
381. Administrative Files 5-217
383. Processing Initial Examiner Designations 5-217
385. Designated Examiners Abroad 5-217
387. Multiple Examiner Designations 5-218
389. Amendment of Designated Examiner Designations 5-219
391. Renewal of Designated Examiner Designations 5-219
393. Processing Designated Examiner Certification Paperwork 5-219
395. Review of Designated Examiner Decisions 5-220
397. Termination of Designated Examiner Designation 5-220
399. Adverse Actions 5-221
400.-410. Reserved 5-222

CHAPTER 6. AIRCREW DESIGNATED EXAMINER (ADE) PROGRAM

Section 1. General

411. General 5-241
413. ADE Program Objectives 5-241
415. Program Description 5-241
417. Guidelines for Establishing an ADE Program 5-241
419. Operator Qualification for an ADE Program 5-242
420.-430. Reserved 5-242

VOLUME 5. TABLE OF CONTENTS—Continued

Page

Section 2. ADE Program Management

431. General 5-255
433. Administrative Structure of an ADE Program 5-255
435. Responsibilities of POI's 5-255
437. Responsibilities of APM's 5-256
439. APM Qualifications 5-258
441. APM Training Before Designation 5-258
443. Maintenance of APM Qualifications 5-259
445. Transition Upon Reassignment of APM's 5-260
447. Remote Training Facilities 5-260
449. Operator Responsibilities 5-260
451. CHDO Manager Responsibilities 5-261
453. RFSD Responsibilities 5-261
455. Establishing an ADE Program 5-262
457. Program Revisions 5-263
458.-468. Reserved 5-263

Section 3. Aircrew Program Designees (APD)

469. General 5-289
471. Privileges and Responsibilities of APD's 5-289
473. Selection of APD's 5-289
475. APD Training and Evaluation 5-290
477. Supervision and Administrative Control of APD's 5-290
479. Certificate-Holding District Office (CHDO) APD Administrative Files 5-291
481. Processing Initial APD Designations 5-291
483. Renewal of APD Designations 5-291
485. Amendment of APD Designations 5-292
487. Processing APD Certification Paperwork 5-292
489. Review of APD Decision 5-292
491. Termination of APD Designations 5-292
492.-502. Reserved 5-293

CHAPTER 7. AIRCRAFT NAVIGATOR CERTIFICATES

Section 1. General

503. Applicability 5-305
505. Eligibility 5-305
507. Application Phase 5-305
509. Individuals Qualified to Conduct Aircraft Navigator Flight Tests 5-305
511. Conduct of Written Test 5-305
513. Conduct of Oral Test 5-305
515. Conduct of Flight Test 5-305
517. Disposition and Issuance of FAA Form 8060-4, "Temporary Airman Certificate," or FAA Form 8060-5, "Notice of Disapproval of Application" 5-306
519. Applicants Under 21 Years of Age 5-306

VOLUME 5. TABLE OF CONTENTS—Continued

Page

520.-530. Reserved 5-306

CHAPTER 8. SCHOOL DESIGNATED EXAMINER (SDE) PROGRAM (TBD)*

531.-652. Reserved 5-319

CHAPTER 9. SELECTED PRACTICES

Section 1. Re-Examination of Airmen Under Section 609

653. Background 5-441
655. General 5-441
657. Basis for a Re-examination 5-441
659. Inspector Authority to Prohibit the Operation of Aircraft 5-441
661. Notification of Other FAA Officials 5-442
663. Procedures for Initiating a Re-examination 5-442
665. Procedures for Handling Various Responses to Notification for Re-examination 5-443
667. Procedures for Conducting a Re-examination 5-444
669. Re-examination Results 5-445
670.-680. Reserved 5-446

Section 2. Amendments to Certificates and Replacement of Lost Certificates

681. General 5-465
683. Amendments to Certificates 5-465
685. Replacement of Certificates 5-466
686.-696. Reserved 5-467

Section 3. Reserved (TBD)

697.-728. Reserved 5-485

Section 4. Pilot Logbooks

729. General 5-621
731. Lost Logbooks or Flight Records 5-621
732.-742. Reserved 5-621

Section 5. Detection of Falsified or Altered Airman Certificates

743. General 5-633
745. Establishing Airman Identity 5-633
747. Suspected Counterfeiting 5-633
749. Identification of Forged or Altered Airman Documents 5-633
751. Duplicate Certificates 5-633
753. Personal Possession of Pilot Certificates 5-633
754.-764. Reserved 5-634

Section 6. Renewal of Flight Instructor Certificates

765. General 5-647
767. Criteria for Renewal 5-647
769. Inspector Qualifications 5-647
771. Processing Renewals 5-647
773. Expired Certificates 5-647
774.-784. Reserved 5-648

Section 7. Special Medical Flight Tests

785. General 5-661
787. Basic Guidelines for Conducting a Special Medical Test 5-661

*(TBD)=TO BE DEVELOPED

VOLUME 5. TABLE OF CONTENTS—Continued

		Page
789.	Use of Simulators	5-661
791.	Specific Testing Procedures	5-662
793.	Medical Flight Test Completion, Results, and Report	5-663
794.-804.	Reserved	5-664
Section 8.	U.S. Airman Certificates and Special Purpose Airman Certificates Issued on the Basis of a Foreign Airman Certificate	
805.	General	5-685
807.	U.S. Airman Certificates Based Upon a Foreign Certificate	5-685
809.	Special Purpose Airman Certificates	5-685
810.-820.	Reserved	5-688
Section 9.	International Crewmember Certificates	
821.	General	5-707
823.	Eligibility	5-707
825.	Application	5-707
827.	Proof of Birth for Persons Born in the U.S.	5-707
829.	Proof of Citizenship for Persons Born Abroad Who Acquired U.S. Citizenship Through a Parent	5-708
831.	Proof of Citizenship for Naturalized Citizens	5-708
833.	Completion and Disposition of File	5-708
835.	Issuance of International Crewmember Certificate by AVN-460	5-709
837.	Surrender and Reissuance of International Crewmember Certificate	5-709
839.	Replacement of Lost Certificates	5-709
841.	Reissuance of International Crewmember Certificate for a Name Change	5-709
842.-852.	Reserved	5-710

FIGURE 5.1.2.4.
PILOT CERTIFICATE AIRCRAFT TYPE DESIGNATIONS—AIRPLANES

MANUFACTURER	MODEL DESIGNATION	PRIOR DESIGNATION	CURRENT DESIGNATION
Aero Commander Division North America Rockwell Corp.	(See Isreal Aircraft)		
Aerospatiale, France	SN 601 Corvette		SN-601
Aerospatiale/Aeritalia, France	ATR-42, ATR-72		ATR-42, ATR-72
Armstrong Whitworth Aircraft, Ltd., UK	Argosy AW 650	Armstrong Whitworth AW-650	AW-650
Avions Dassault, General Aeronautique Marcel, Dassault, France	Mystere 10 Falcon		DA-10
	Mystere 20 Falcon, Fan Jet	GAMD/SUD-20	DA-20
	Falcon 50 (Tri-jet) Falcon 900		DA-50
	Fan Jet Model 200		DA-200
Beech Aircraft Corp.	(See Raytheon)		
Boeing Co., USA	B-17	Boeing B-17	B-17
	247-D	Boeing 247	B-247
	314, B-314	Boeing 314	B-314
	S-307, SA-307, B-307	Boeing 307	B-307
	377, C-97, YC-97	Boeing 377	B-377
	707, 720, C-135, E3-A, E6-A/B C-18B, EC-18B, EC-18D	Boeing 707/720	B-707, B-720
	727	Boeing 727	B-727
	737/100/200/300/400/500, T-43	Boeing 737	B-737
	747, E-4, 747SP	Boeing 747	B-747
	B-747-400		B-747-4
	757, 767		B-757, B-767
Breguet, France	Fauvette 905A		BG-905
Bristol Aircraft Ltd., UK	Britannia 305		BR-305
British Aerospace/Taiwanese Aerospace Corp.	BAE-146-70/85/100/115 Series AVR-146J	BAE-146	BAE-146, AVR-146
Bristish Aerospace Corporation	BAE-ATP		BAE-ATP
	HP.137, MK.1 Jetstream Series 200 Jetstream 3101 Jetstream 3201		BA-3100
	Jetstream 4100		BA-4100
	Concorde SST		CONCRD
British Aircraft Corp., UK	BAC 1-11	BAC-1-11	BA-111

FIGURE 5.1.2.4.—Continued
PILOT CERTIFICATE AIRCRAFT TYPE DESIGNATIONS—AIRPLANES

MANUFACTURER	MODEL DESIGNATION	PRIOR DESIGNATION	CURRENT DESIGNATION
Bushmaster Aircraft	Bushmaster 2000		BU-2000
Canadair, Ltd., Canada	CL-44 (Yukon)	Canadair	CL-44
	CL-215		CL-21
	CL-600 (Challenger) CL-601, CL-601-3A		CL-600
	CL600-2B19 (Regional Jet)		CL-65
Cessna Aircraft Corp., USA	Cessna 500, 501, 550, 551, 552, T-47, S550, 560		CE-500
	CE-525		CE-525
	CE-525 (single pilot)		CE-525S
	Citation III, Model 650 Citation VI, VII		CE-650
Chase (also Roberts Aircraft Co.), USA	YC-122	Chase YC-122	YC-122
Consolidated Vultee Aircraft	(See General Dynamics Corp.)		
Convair	(See General Dynamics Corp.)		
Constructiones Aeronauticas S.A.	CASA (Model) C-212-CB		CA-212
	C-235		CN-235
Curtiss-Wright Corp., USA	Commando CW-20 C-46A, D, E, F, R	Curtis-Wright C-46	CW-46
Dart Aircraft Corp.	(See General Dynamics Corp.)		
deHavilland Aircraft of Canada Ltd., Canada	Caribou 4A USAF C-7A, Army CV-2	deHavilland Caribou DH-4	DH-4
	DHC-7		DHC-7
	DHC-8		DHC-8
Dee Howard Co., USA	Howard 500	Howard 500	HW-500
Dornier, Deutsch Aerospace	Dornier 228-101, -201, -212		DO-228
	Dornier-328-100		DO-328
Empresa Brasileira de Aeronautica, Brazil	EMB-110P1, P2, P3		EMB-110
	EMB-120		EMB-120
Fairchild Aircraft Corp., USA and Fokker, The Netherlands	Fokker F-27 MK100, MK500 Fairchild F-27A/B/F/FH	Fairchild F-27/227	F-27
	C-119C, FA-C119C		FA-119C
	C-123		FA-C123
	C-82A		C-82A

FIGURE 5.1.2.4.—Continued
PILOT CERTIFICATE AIRCRAFT TYPE DESIGNATIONS—AIRPLANES

MANUFACTURER	MODEL DESIGNATION	PRIOR DESIGNATION	CURRENT DESIGNATION
Fairchild Aircraft Corp.—Continued	SA 226-TC, SA-227-AC, AT, TT SA-227-DC C-26A, C-26B SA-227-CC		SA-227
Fokker, Netherlands	Fellowship F-28 (Models 1000 & 4000)		FK-28
	Fokker 28 MK 0100 Fokker 28 MK 0070		FK-100
	F-50		FK-50
Ford Motor Corp., USA	Tri-Motor 4-AT 5-AT, FO-5	Ford 5	FO-5
General Dynamics Corp., USA	PB2Y, PB2Y-5	Consolidated-Vultee PB2Y	CV-PB2Y
	PB4Y-2, QP-4B	Consolidated-Vultee P4Y	CV-P4Y
	PBY-5, 28-4, 28-5, 28-5ACF, 28-5AMC, OA-10, OA-10A	Consolidated-Vultee PBY-5	CV-PBY-5
	LB-30, C87A, RB-24, CV-LB30	Consolidated-Vultee LB-30	CV-LB30
	240, 340, 440, T-29 C-131	Convair 240/340/440	CV-240, CV-340, CV-440
	22, 22M (880) (990)	Convair 880/990	CV-880, CV-990
	Napier-Eland Mark I, Mark II, Allison Propjet	Napier-Eland Convair Mark I/II	CV-N1, CV-N2
	Allison 340, 440, 580, CV-A340, CV-A440	Allison 340/440	CV-A340, CV-A440
	Dart Convair 240, 340, 440	Convair 600/640	CV-600, CV-640
Groupement d'Interet Economique Airbus Industrie, France	A-300B Airbus		A-300
	A-300-600R, A-310		A-310
	A-320 Airbus		A-320
	A-330 Airbus		A-330
	A-340 Airbus		A-340
Grumman Aircraft Engineering Corp., USA	TBF, TBM AF-2S (Ref. T.O.AR-36)	Grumman TBF	G-TBM
	G-64 Albatross, GSA16		G-111
	G-73 Turbo Mallard (Frakes Conversion)	FS-73T	G-73T
	G-73 Mallard	Grumman G-73	G-73
	S2F/C1A		G-S2

FIGURE 5.1.2.4.—Continued
PILOT CERTIFICATE AIRCRAFT TYPE DESIGNATIONS—AIRPLANES

MANUFACTURER	MODEL DESIGNATION	PRIOR DESIGNATION	CURRENT DESIGNATION
Gulfstream Aerospace Corporation, USA	G-159 Gulfstream VC-4A, TC-4C	Grumman G-159	G-159
	G-1159 Gulfstream	Grumman G-1159	G-1159
	G-1159C		G-IV
Hamburger Flugzeubau G.M.B.H., Germany	Hansa Jet 320		HF-320
Handley Page Aircraft Co., Ltd., UK	Herald 300	Handley Page 300	HP-300
Hawker Siddeley Aviation Ltd., UK	DH-106, Comet 4C	deHavilland 4C	HS-106
	DH-114 Heron	Hawker Siddeley 114	HS-114
(Also see Raytheon Aircraft Corp.)	Hawker Siddeley 748		HS-748
Howard Aero Corp.	(See Dee Howard Co.)		
Israel Aircraft Ltd., Israel	Westwind 1124, Commodore Jet AC-1121, CJ-1123		IA-JET
	Astra IAI-1125		IA-1125
	ARAVA IA 101B		IA-101
Learjet Corp.	23, 24, 25, 28, 29, 31, 35, 36, 55, C21-A	LR-23, LR-24, LR-25, LR-28, LR-29, LR-35, LR-36, LR-50	LR-JET
	60		LR-60
Lockheed Aircraft Corp., USA	Lightning P-38	Lockheed P-38	L-P38
	B-34, PV-1, PV-2	Lockheed B-34	L-B34
	Series 14	Lockheed 14	L-14
	18, C-57, C-60, R-50, Learstar	Lockheed 18	L-18
	P2V-7, SP-2E/H (Restricted), LP2V-5F		L-P2V
	Constellation 049, 149, 649, 749, 1049, 1649	Lockheed Constellation	L-1049
	Electra 188, P-3	Lockheed 188	L-188
	Jetstar, C-140, Jetstar II, 1329-25	Lockheed 1329	L-1329
	L-382-B/E/F/G C-130A/B/E/H	Lockheed 382	L-382
	300, C-141	Lockheed 300	L-300
	L-1011 Tristar		L-1011
	T-33		T-33
Martin-Marietta Corp., USA	B-26 Marauder	Martin B-26C	M-B26

FIGURE 5.1.2.4.—Continued—Continued
PILOT CERTIFICATE AIRCRAFT TYPE DESIGNATIONS—AIRPLANES

MANUFACTURER	MODEL DESIGNATION	PRIOR DESIGNATION	CURRENT DESIGNATION
Martin-Marietta—Continued	PBM-5, C-162	Martin PBM-5	M-PBM-5
	Mariner 202/404	Martin 202/404	M-202, M-404
McDonnell Douglas Aircraft Corp., USA	AD-4N		AD-4N
	A-20	Douglas A-20	DC-A20
	A-24, SBD	Douglas A-24	DC-A24
	B-26	Douglas B-26	DC-B26
	B-18	Douglas B-18	DC-B18
	B-23, UC-67	Douglas B-23	DC-B23
	DC-2, C-32, C-34, C-39, C-42	Douglas DC-2	DC-2
	DC-3, C-47, C-117	Douglas DC-3	DC-3
	Super DC-3, C-117D	Douglas DC-3S	DC-3S
	DC-3 (Turboprop)		DC-3TP
	DC-4, C-54	Douglas DC-4	DC-4
	DC-6, DC-7, C-118	Douglas DC-6, DC-7	DC-6, DC-7
	DC-8	Douglas DC-8	DC-8
	DC-9, -10, -30 DC-9-50, C-9 DC-9-80, MD-80, MD-90	Douglas DC-9	DC-9
	DC-10, KC-10		DC-10
	MD-11		MD-11
Mitsubishi Aircraft International, Inc.	(See Raytheon Aircraft)		
Morane-Saulnier, France	MS760	Morane-Saulnier MS-760	MS-760
Nihon Aeroplane Manufacturing Co., Ltd., Japan	YS-11	NAMC YS-11	YS-11
Nord Aviation	262A Super Broussard, ND262/262FM Mohawk 298	Nord 262 ND 262/262FM	ND-262
North American Rockwell Corp., USA	B-25 Mitchell	North American	N-B25
	NA-265 Sabreliner T-39	North American NA-265	N-265
Northrop Corp., USA	P-61 Black Widow	Northrop P-61	NH-P61
Piaggio, Italy	Piaggio-Douglas 808	Piaggio Douglas PD-808	P-808
Piper Aircraft, USA	PA-42-720 (Restricted)		PA-42R

FIGURE 5.1.2.5.
PILOT CERTIFICATE AIRCRAFT TYPE DESIGNATIONS—ROTORCRAFT

MANUFACTURER	MODEL DESIGNATION	PRIOR DESIGNATION	CURRENT DESIGNATION
Raytheon Aircraft Corp. (Formerly Beech Aircraft Corp. & Raytheon Hawker Corporate Jets) Witchita, KS	BE-200T/200TC, RC-12K, RC-12P, RC-12H, RC-12G (By Serial No.) (restricted)		BE-200
	BE-300, BE-350, BE-300LW, BE-B300		BE-300
	BE-300FF, BE-300F		BE-300F
	BE1900, BE1900C, BE1900D, C-12J (Restricted)		BE-1900
	BE-2000 Starship		BE-2000
	BE-2000S (single pilot)		BE-2000S
	Diamond I, MU-300, MU-300-10, BE400, BE400(A)(T)	MU-300	MU-300, BE-400
	BAE-125-1000		BAE-125
	DH-125, BH-125, HS-125 Series (except -1000)	Hawker Siddeley 125	HS-125
SAAB-Fairchild International, S-58188 Linkoping, Sweden	SAAB-Fairchild 340		SF-340
Short Brothers and Harland Ltd., Northern Ireland (UK)	SD3-30, SD3-60 Variant 200	SD3-30	SD-3
Sikorsky Aircraft Division of United Aircraft Corp., USA	VS-44AC-32, C-34	Sikorsky VS-44	SK-44
	S-43 Series	Sikorsky S-43	SK-43
Sud Aviation, France	SE Caravelle I, II, VIR	SUD 210	S-210
Vickers-Armstrong British Aircraft Corp., IJK	700 & 800 Series	Vickers Viscount	VC-700, VC-800

FIGURE 5.1.2.5.—Continued
PILOT CERTIFICATE AIRCRAFT TYPE DESIGNATIONS—ROTORCRAFT

MANUFACTURER	MODEL DESIGNATION	PRIOR DESIGNATION	CURRENT DESIGNATION
Bell USA	BH-214ST		BH-14ST
Boeing Vertol, USA	107-II, H-46 Kawasaki, KV107-II	Vertol 107 II	BV-107
	114, CH-47A, B, and C Series BV-234 (CH-47D)		BV-114 or BV-234
	BV-44, H-21	Vertol 44	BV-44
Sikorsky, USA	H-37 Series		SK-56
	S-58 Series, H-34 Series	Sikorsky S-58, S-58IT	SK-58
	S-61 Series, H-3 Series	Sikorsky S-61	SK-61
	S-64 Series, CH-54A Series	Sikorsky S-64	SK-64
	HH-53, CH-53A	Sikorsky S-65	SK-65
Sud Aviation, USA	SA321F		S-321
	SA330F, SA-332 AS-330		S-330

The following applies to helicopters weighing 12,500 pounds or less on which type ratings are issued to holders of airline transport pilot certificates only:

MANUFACTURER	MODEL DESIGNATION	PRIOR DESIGNATION	CURRENT DESIGNATION
Aerospatiale, France	SA 341/342 Gazelle SA 360		SA-341
	AS 350 Astar		AS-350
	SA 355 Twinstar		AS-355
	SA-360C Dauphine (SE)		SA-360
	SA 365 Dauphine (ME)		SA-365
	SA 365 Dolphin (HH-65)		SA-365
Bell, USA	47 Series H-13 Series	Bell 47	BH-47
	204-B, UHI-B, -D, H205B	Bell 204	BH-204
	206A, 206B	Bell 206	BH-206
	212/412 Series	Bell 212	BH-212
	214 Series (Except ST)		BH-214
	214ST		BH-214 ST

FIGURE 5.1.2.5.—Continued
PILOT CERTIFICATE AIRCRAFT TYPE DESIGNATIONS—ROTORCRAFT

MANUFACTURER	MODEL DESIGNATION	PRIOR DESIGNATION	CURRENT DESIGNATION
Bell, USA—Continued	222 Series		BH-222
	412		BH-412
Brantley, USA	B-2 (YH03BR)	Brantley B-2	BY-2
	B-305	Brantley B-305	BY-305
Construzioni Aeronautiche Giovanni Agusta, Italy	A109 Agusta		A-109
Enstrom, USA	F-28	Enstrom F-28	EN-28
Hiller, USA	UH-12 Series, H-23 Series	Hiller UH-12	HH-12
Fairchild, USA	FH-1100	FH-1100	FA-1100
Hughes, USA (Schweizer)	300, 269 Series	Hughes 269A	HU-269
	500, 369 Series	Hughes 500	HU-369
Kaman, USA	K-190A	Kaman K-190A	KM-190
	K-225	Kaman K-225	KM-225
	K-240, HTK-1	Kaman K-240	KM-240
	K-600		KM-600
Lockheed, USA	Lockheed California 286	Lockheed California 286	L-286
McDonnell Douglas	Notar MD-500 369-E, 369FF		MD-500N, HU-369
Messerschmitt Bolkow Gmbh (West Germany)	BO-105A		BO-105
	BK-117-A1		BK-117
Omega, USA	12D1A	Omega 12D1	OM-12
Piasecki, USA	HRP-1, HRP-2	Piasecki HRP	PI-HRP
Robinson Helicopter	R-22		R-22
	R-44		R-44
Scheutzow, USA	Model B		SC
Sikorsky, USA	R-4B	Sikorsky R-4B	SK-4
	R-5A, YR-6A R-6A, HOS-1	Sikorsky R-5A	SK-5
	S-51	Sikorsky S-51	SK-51
	S-52 Series	Sikorsky S-52	SK-52
	S-55, H-19 Series	Sikorsky S-55	SK-55
	S-62A, HH-52A	Sikorsky S-62	SK-62
	S-76		SK-76
Silvercraft, USA	SPA-SH4		SI-4

FIGURE 5.1.2.5.—Continued
PILOT CERTIFICATE AIRCRAFT TYPE DESIGNATIONS—ROTORCRAFT

MANUFACTURER	MODEL DESIGNATION	PRIOR DESIGNATION	CURRENT DESIGNATION
Sud Aviation (Aerospatiale)	SE 3130, SE 313B, SE 3160, SA 316B, SA 3180, SA 318B, SA 318C, SA 315B	Sud Alouette II/III	S-3130
	SO 1221	Sud Djinn	S-1221
Westland Helicopters, Inc., Yeoville, England	W-30		WH-30

CHAPTER 2. AIRLINE TRANSPORT PILOT CERTIFICATES

SECTION 1. APPLICATION PHASE—AIRPLANES AND HELICOPTERS

51. APPLICABILITY. This chapter contains specific direction, guidance, and procedures for the conduct of airline transport pilot (ATP) certification and for the addition of category, class, and type ratings to ATP certificates. The direction and guidance in chapter 1 is general and applies to ATP certification as well as other types of airman certifications covered in this volume. To avoid unnecessary repetition, the material in chapter 1 is not repeated in this chapter.

53. ELIGIBILITY FOR THE ATP WRITTEN (KNOWLEDGE) TEST. Test examiners administer aeronautical knowledge tests in written form or by computer. Since these tests can be administered by both means, they will be referred to as knowledge tests. Before an applicant may take the ATP knowledge examination, however, an inspector must establish that the applicant is eligible for the requested certificate in either the airplane or rotorcraft category. Except for age, applicants must meet all eligibility requirements before being authorized to take the ATP knowledge test or being issued a Federal Aviation Administration (FAA) Form 8060-7, "Airman's Authorization for Written Test." Inspectors should use either the job aid entitled, "ATP—Knowledge Qualifications Job Aid—Airplane" or "ATP—Knowledge Qualifications Job Aid—Helicopter," as applicable, to complete this task (see figures 5.2.1.1. and 5.2.1.2. at the end of this section). These job aids are available on the district office Job Aid Disk. The eligibility requirements for the ATP certificate are printed in an abbreviated form on the job aid. The following is an expanded discussion of the eligibility requirements.

A. An applicant must submit documentary evidence to show at least one of the following acceptable pilot qualifications:

- An FAA commercial pilot certificate
- A commercial or ATP certificate (without limitation) issued by an International Civil Aviation Organization (ICAO) country
- Evidence of United States (U.S.) military pilot qualification within the past 12 calendar months (such as aeronautical orders or flight time logs)

B. An applicant must possess a current first class medical certificate.

C. An applicant must be a high school graduate or the equivalent. For example, proof of passing a high school equivalency test meets this requirement. A record of successful professional pilot employment is also an acceptable equivalent.

D. An applicant must be able to read, write, and understand the English language. The applicant must be able to speak in English without having an accent or an impediment of speech that is so extreme that it would interfere with two-way radio conversation. If there is doubt about an applicant's ability to read, the inspector shall have the applicant read aloud a short paragraph from an appropriate source, such as an aircraft operating manual. If there is doubt about the applicant's ability to write in English, the inspector shall read a short statement and have the applicant write it in English. If on the basis of these tests, the inspector has reason to believe the applicant is not able to read, write, understand, or clearly speak the English language, the inspector shall not issue a knowledge test authorization. Instead, the inspector shall refer the matter to the immediate supervisor who shall make a final determination of whether the applicant meets the English language requirement.

E. An applicant must be of good moral character. The inspector shall ask an applicant if the applicant has been convicted of a felony. If an applicant's answer is affirmative, the inspector should make further inquiry about the nature and disposition of the conviction. If an inspector has reason to believe an applicant does not qualify for an ATP because of questionable moral character, the inspector shall not issue a knowledge test authorization. Instead, the inspector shall refer the matter to the immediate supervisor for resolution. The supervisor may need to consult with regional counsel for a determination concerning whether the applicant meets the moral character eligibility requirement.

F. An applicant must have accumulated the flight experience required for the appropriate category rating before taking the knowledge examination. Each applicant must submit logbooks or other equivalent documents for an inspector to verify the flight experience. See paragraphs 55 and 59 for the experience requirements for the airplane and rotorcraft categories, respectively.

G. When an inspector has verified that the applicant meets the eligibility requirements, the applicant is entitled to take the knowledge test. If the applicant plans to take the knowledge test at a different location or at a later date, the inspector shall complete FAA Form 8060-7. The original FAA Form 8060-7 shall be given to the applicant with instructions to present it to the person conducting the knowledge test. The expiration date on the form will be the same date that the applicant's current first class medical expires. See figure 5.2.1.3. for an example of FAA Form 8060-7. If appropriate, the inspector should remind the applicant that proof of age will be required before issuance of the certificate. It is unnecessary to retain the copies of the FAA Form 8060-7 after a record of its issuance has been made in the Program Tracking and Reporting Subsystem (PTRS).

H. Prerequisites for the ATP Rotorcraft Knowledge Examination. Prerequisites for the ATP rotorcraft knowledge examination are defined in Federal Aviation Regulations (FAR) Part 61. Accordingly, issuance of FAA Form 8060-7 to applicants for the ATP rotorcraft knowledge test is not required.

55. FLIGHT EXPERIENCE REQUIREMENTS FOR THE AIRPLANE CATEGORY. Each applicant for an ATP certificate in an airplane category rating must meet each of the following seven experience requirements.

A. Total Pilot Flight Hours. A minimum of 1,500 total pilot flight hours must have been accumulated by the applicant. The following types of flight experience may be credited toward the total pilot flight hour requirement:

- All pilot-in-command (PIC) hours
- All dual instruction received by the applicant
- All flight time acquired as a second-in-command (SIC) in aircraft requiring at least two pilots by the approved airplane flight manual (AFM), airworthiness certificate, or in FAR Part 121 or 135 operations
- For commercial pilots, up to 500 hours of flight engineer (FE) time acquired in FAR Part 121 operations (The FE time must have been acquired in an airplane requiring an FE. While acquiring these hours, the applicant must have held a commercial pilot certificate and been participating as a pilot or FE in a FAR Part 121 approved pilot training program. FE time may be credited at a rate of 1 hour of pilot time for each 3 hours of FE time. For example, if the applicant has accumulated 300 hours of FE time, 100 hours may be credited toward the 1,500 total pilot hour requirement.)

B. Hours as PIC. The applicant must have accumulated at least 250 hours as PIC. SIC hours acquired while performing the duties of PIC under the supervision of a qualified PIC may be credited toward this requirement.

C. Hours of Cross-Country. At least 500 flight hours must have been accumulated as a pilot in cross-country flight. Cross-country time is that time acquired during flight from a departure point to a destination point that is not the same as the departure point. It is also time acquired in flight that is cross-country in nature even though the departure and destination points are the same (such as forestry patrol).

D. Hours of PIC Cross-Country. At least 100 flight hours must have been accumulated as PIC while conducting cross-country flight. SIC hours while performing the duties of PIC under the supervision of a qualified PIC may be credited toward this requirement.

E. Hours at Night. At least 100 hours must have been accumulated as a pilot at night. An applicant who has made over 20 night landings may thereafter substitute one additional night takeoff and landing to a full stop for 1 hour of nighttime.

F. Hours as PIC at Night. At least 25 hours must have been accumulated as a PIC at night. SIC hours while performing the duties of PIC under the supervision of a qualified PIC may be credited toward this requirement.

G. Instrument Hours. At least 75 hours must have been accumulated as a pilot in actual or simulated instrument conditions. Fifty hours of this time must have been in actual flight.

57. ICAO RESTRICTIONS. The flight time requirements for an ATP certificate with an airplane category rating are more restrictive under the ICAO standards than those under FAR Part 61. An applicant may meet the requirements described in paragraph 55 of this section and be eligible for a U.S. ATP certificate, but not meet the ICAO requirements. In this case, an ICAO restriction must be placed on the applicant's ATP certificate. A determination of whether an applicant meets the ICAO requirements does not have

to be made until the temporary certificate is issued. It is convenient for inspectors to make the ICAO determination, however, when the determination of eligibility for the knowledge test is being made. An inspector who makes the determination of an applicant's eligibility for a knowledge test should also determine if an ICAO restriction is required. Information concerning the ICAO determination should be entered on the ATP-Knowledge Qualifications Job Aid and given to the applicant to present to the inspector issuing the temporary certificate. Inspectors shall indicate on the ATP-Knowledge Qualifications Job Aid whether any ICAO restriction is required. The inspector shall date and sign the job aid, and give it to the applicant. The inspector shall explain the ICAO restrictions and inform the applicant that the job aid should be presented to the inspector or examiner who completes the certification and issues the temporary certificate. If the applicant fails to present the signed job aid, the applicant's logbooks will have to resubmitted before a temporary certificate can be issued. There are two circumstances in which an ICAO restriction must be added to an applicant's ATP certificate:

A. The first circumstance requiring an ICAO restriction is when the applicant uses SIC or FE time to meet the 1,500 total pilot hour requirement. The restriction is required when the total of the applicant's PIC time (see paragraph 55A, first bullet) and 50 percent of the SIC time (see paragraph 55A, third bullet) does not exceed 1,200 hours. In this case, the restriction placed on the certificate must be, "Holder does not meet the pilot flight experience requirements of ICAO." The following is an example of how to compute whether this restriction is required:

FAA		ICAO
PIC =	800 hrs	800 hrs
SIC =	700 hrs X 50% =	350 hrs
	1,500	1,150

(ICAO restriction required)

B. The second circumstance requiring an ICAO restriction is when an applicant has less than 150 actual PIC hours. In this case, the restriction placed on the certificate must be, "Holder does not meet the PIC flight experience requirement of ICAO." See paragraph 55B.

59. FLIGHT EXPERIENCE REQUIREMENTS FOR THE ROTORCRAFT CATEGORY. Each applicant for an ATP certificate in the rotorcraft category must meet each of the following seven experience requirements.

A. Total Pilot Flight Hours. A minimum of 1200 total pilot flight hours must have been accumulated by the applicant. The following types of flight experience may be credited toward the total pilot flight hour requirement:

- All hours
- All dual instruction received by the applicant
- For commercial pilots, all flight time acquired as an SIC in aircraft requiring at least two pilots by the approved flight manual, airworthiness certificate, or in FAR Part 121 or 135 operations

B. Hours of Cross-Country. At least 500 flight hours must have been accumulated as a pilot in cross-country flight. Cross-country time is time acquired during flight from a departure point to a destination point that is not the same as the departure point. It is also time acquired in flight that is cross-country in nature even though the departure and destination points are the same (such as forestry patrol).

C. Hours at Night. At least 100 hours must have been accumulated as a pilot at night, 15 of which must have been in a helicopter.

D. Hours of Flight Time in Helicopters. At least 200 flight hours must have been accumulated in a helicopter. SIC hours accumulated while performing the duties of PIC under the supervision of a qualified PIC may be credited toward this requirement.

E. Hours as PIC in a Helicopter. At least 75 hours must have been accumulated as PIC in a helicopter. SIC hours acquired while performing the duties of PIC in a helicopter under supervision of a qualified PIC may be credited toward this requirement.

F. Instrument Hours. At least 75 hours must have been accumulated as a pilot in actual or simulated instrument conditions. Fifty hours of this time must have been in actual flight and at least 25 hours as PIC in a helicopter. SIC hours acquired while performing the duties of PIC under supervision of a qualified PIC may be credited toward this requirement.

61. EXPERIENCE VERIFICATION FOR ORAL AND FLIGHT TESTS. Each applicant's flight experience and other general eligibility requirements must be verified during application for the knowledge test. Therefore, inspectors conducting oral

and flight tests may accept AC Form 8080-2, "Airman Written Test Report" (or computer-generated airman knowledge test report) showing ATP knowledge test results as proof that an applicant meets the flight time and general experience requirements for the certificate and category rating sought. The additional items that must be verified before each step in the certification process are listed on the ATP oral and flight test job aids. The inspector who completes the flight test may accept a completed "ATP-Knowledge Qualifications Job Aid—Airplane" (with an inspector's signature) as proof that the applicant meets the ICAO requirements. If an applicant for an ATP certificate with an airplane category rating fails to produce the job aid, the inspector must review the applicant's logbooks before an unrestricted certificate may be issued. If the applicant fails to produce either the job aid or the logbooks, the inspector shall not issue a temporary certificate unless both ICAO restrictions are placed on the certificate. The ICAO restrictions do not apply to the rotorcraft category.

63. ELIGIBILITY REQUIREMENTS COMMON TO BOTH THE ORAL AND FLIGHT TEST PHASES. Inspectors and examiners conducting oral and flight tests must establish that applicants have met all specialized requirements for each phase of the test process. The requirements for each phase are listed on the applicable job aids. The following requirements are common to both the oral and flight test phases:

A. Medical. An applicant must present a current first class medical certificate for an original ATP certificate. For an additional category, class, or type rating an applicant must present a medical certificate valid for at least third class privileges.

B. Application. An applicant must present a completed and signed ATP application form, FAA Form 8710-1, "Airman Certificate and/or Rating Application."

C. Notice of Disapproval. If an applicant has previously failed a test phase, the applicant must present a copy of the FAA Form 8060-5, "Notice of Disapproval of Application." If the applicant fails to produce this form, the inspector or examiner will not have a record of previously accomplished phases and the entire test must be repeated.

D. Knowledge Test Results. An applicant for an original issuance of an ATP certificate or for the addition of a category rating to an ATP certificate must produce the original AC Form 8080-2, showing satisfactory results. Inspectors and examiners shall not accept expired test reports unless the applicant provides written evidence permitting extension of the eligibility period (see paragraph 65). When satisfactory evidence is presented, the inspector or examiner shall place the following statement on AC Form 8080-2: "The period of validity of this form has been extended in accordance with the applicable provisions of FAR § 61.39(b)." The inspector or examiner shall date and sign the form.

E. Instructor Recommendation. An applicant who has failed a phase of a test within the past 30 days must have an instructor's recommendation to retake the test (FAR § 61.49). If an applicant has failed a phase of the test more than once, the applicant must wait 30 days from the last failure before retaking that phase of the test. The Air Transport Association of America (ATA), however, has an exemption to the 30-day waiting period for those employees of a member airline trained in that airline's training program. Such employees do not need to wait the 30 days before retaking the test.

> *FYI: An instructor in a FAR Part 121 or FAR Part 135 approved training program is an airman who has completed the operator's instructor or check airman training program and has been designated as an instructor or approved as a check airman. An instructor qualified under a FAR Part 121 or FAR Part 135 program may not exercise any of the privileges of a flight instructor certificate, unless that instructor also holds that certificate. For example, an instructor in a FAR Part 121 program who does not hold a flight instructor certificate may not recommend the retesting of an ATP applicant who has not been trained in a FAR Part 121 program. This privilege is limited to an airman who holds a flight instructor certificate. The same instructor, however, may recommend the retesting of an ATP applicant who has been trained in an approved FAR Part 121 program.*

65. EXTENDING VALIDITY PERIODS OF ATP KNOWLEDGE TEST RESULTS—FAR § 61.39(b). Inspectors and examiners shall not accept expired knowledge test reports except under the following conditions:

A. FAR Parts 121 and 135 Flightcrew. Flight crewmembers employed by FAR Part 121 operators or FAR Part 135 commuter operators in either airplanes or helicopters must meet the following requirements to extend the validity date of the knowledge test:

(1) An applicant must have been employed by a U.S. air carrier operating under FAR Part 121 or as a commuter air carrier under FAR Part 135 within the period ending 24 calendar months after the month in which the applicant passed the first of any required knowledge test.

(2) An applicant for an oral or flight test must be currently employed as a flight crewmember by a FAR Part 121 operator or a FAR Part 135 commuter operator. An applicant is not required to have been continuously employed in a qualifying position, provided the applicant meets the requirements of this subparagraph and the preceding subparagraph.

FYI: Employment by a FAR Part 135 on-demand operator does not qualify an applicant for an extension.

(3) An applicant must be participating in a training program that includes a recurrent training curriculum and must have completed initial, transition, or upgrade training, as appropriate, in accordance with FAR Part 121 or FAR Part 135.

B. Military Pilots. An applicant who participates as a pilot in the flight training program of a scheduled military air transportation service must meet the following requirements:

(1) Within the period ending 24 calendar months after the month in which the applicant passed the first of any required knowledge tests, the applicant participated as a *pilot* in a pilot training program of a U.S. scheduled military air transportation service, such as the U.S. Air Force Air Mobility Command (AMC).

(2) The applicant must be currently participating in the military training program.

C. Extending Validity Period of Airman Knowledge Test. If an applicant qualifies for extension of the ATP knowledge test validity period in accordance with FAR § 61.39(b), the following will be stamped or typed on the "Airman Written Test Report" (or computer-generated airman knowledge test report): "The validity period of this form is extended in accordance with the applicable provisions of FAR § 61.39(b)." Following this statement, the authorizing inspector shall sign, date, and show current Flight Standards District Office (FSDO) assignment.

67. SPECIFIC ELIGIBILITY REQUIREMENTS FOR THE ORAL TEST. Applicants must present their training records or a written statement from a company official as proof that the following eligibility requirements for the oral test have been met:

- All approved ground training hours have been completed
- The approved ground training curriculum segment has been completed
- An instructor has certified that the applicant has acquired the necessary knowledge for the oral test (See FAR § 121.401(c) and FAR § 135.323(c).

69. SPECIFIC ELIGIBILITY REQUIREMENTS FOR THE FLIGHT TEST. Applicants must present their training records or a written statement from a company official as proof that the following eligibility requirements for the flight test have been met:

A. Training Events. The training records or the written statement must show that the applicant has successfully completed all the flight training events required by the approved flight training curriculum segment.

B. Training Hours. The training records or the written statement must show that the applicant has completed the number of flight training hours specified in the approved flight training curriculum segment. An applicant may qualify for the flight test with less than the specified number of flight training hours, provided an instructor certifies that the applicant's proficiency is satisfactory before the flight test. If an applicant has previously failed any segment of a flight test, all approved flight training hours must be completed before retesting, and an instructor must certify that the applicant is proficient in the items failed.

C. Aircraft Training. All flight training must be completed before any segment of a flight test in an aircraft may be conducted. When a flight test is conducted in two segments (a combination of flight simulator and aircraft) the flight training specifically required in an aircraft (see figure 5.2.4.1.) must be completed before the aircraft segment of the flight test. Aircraft training is not required before the flight simulator or flight training device segment of the test.

70.–74. RESERVED.

FIGURE 5.2.1.1.
ATP-KNOWLEDGE QUALIFICATIONS JOB AID—AIRPLANE

APPLICANT NAME: _____ DATE: _____

REQUIREMENTS FOR KNOWLEDGE EXAMINATION

[ ] A. Commercial pilot certificate (or acceptable equivalent)
[ ] B. Current first class medical certificate
[ ] C. High school graduation or equivalent experience
[ ] D. Read, write, and understand the English language
[ ] E. Good moral character

FLIGHT EXPERIENCE

[ ] 1,500 total hours
ICAO Restriction required?: [ ] Yes [ ] No
"Holder does not meet the pilot flight experience requirements of ICAO."

[ ] 250 total PIC hours:
ICAO Restriction required?: [ ] Yes [ ] No
"Holder does not meet the PIC flight experience requirements of ICAO."

[ ] 100 PIC cross-country (May use SIC acting
[ ] 25 PIC at night as PIC under supervision)
[ ] 500 total cross-country
[ ] 100 total hours at night (May substitute landings)
[ ] 75 total hours instrument

ELIGIBILITY ESTABLISHED

[ ] Complete FAA Form 8060-7 in duplicate and give to applicant. (Expires with current first class medical privileges)
[ ] Mark ICAO restrictions, sign, and give to applicant.
[ ] Complete PTRS, Code 1576.

INSTRUCTIONS TO THE APPLICANT

1. Present FAA Form 8060-7 to person administering knowledge test.
2. Save this job aid and present to the inspector or examiner conducting the flight test. If this job aid is lost, bring proof of experience to the flight test. If proof of experience is not presented at the test, an ICAO restriction must be placed on the certificate.

INSPECTOR SIGNATURE: _____

DISTRICT OFFICE: _____

FIGURE 5.2.1.2.
ATP-KNOWLEDGE QUALIFICATIONS JOB AID—HELICOPTER

APPLICANT NAME: _____ DATE: _____

REQUIREMENTS FOR KNOWLEDGE EXAMINATION

[ ] A. Commercial pilot certificate (or acceptable equivalent)
[ ] B. Current first class medical certificate
[ ] C. High school graduation or equivalent experience
[ ] D. Read, write, and understand the English language
[ ] E. Good moral character

FLIGHT EXPERIENCE

[ ] 1,200 total hours
[ ] 500 hours cross-country
[ ] 100 hours at night (15 hours must have been in a helicopter)
[ ] 200 hours in a helicopter
[ ] 75 PIC hours in a helicopter (may credit supervised SIC)
[ ] 75 total hours instrument (50 hours must have been in flight and 25 hours as PIC in a helicopter)

ELIGIBILITY ESTABLISHED

[ ] Complete FAA Form 8060-7 and give to applicant (expires in 6 months).
[ ] Complete PTRS, Code 1576.

INSTRUCTIONS TO THE APPLICANT

FAA Form 8060-7 is not required for the ATP rotorcraft knowledge test.

FIGURE 5.2.1.3.
FAA FORM 8060-7, "AIRMAN'S AUTHORIZATION FOR WRITTEN TEST"

*U.S. GPO:1992-0-668-873

TYPE OR PRINT *(USE BALL POINT PEN)*
FAA Form 8060-7 *(2-69)*

U.S. DEPARTMENT OF TRANSPORTATION
FEDERAL AVIATION ADMINISTRATION
AIRMAN'S AUTHORIZATION FOR WRITTEN TEST

DATE

EXP. DATE

NAME *(Typed or Printed)*

WHOSE SIGNATURE IS

ADDRESS

have been reviewed and he is considered eligible to take the Federal Aviation Administration written test for:

SIGNATURE AND TITLE OF INSPECTOR

OFFICE SYMBOL

AIRMAN: It is recommended that you contact in advance the particular Air Carrier District Office, General Aviation District Office, Flight Service Station, or General Aviation Inspector for an appointment for the examination and other pertinent information.

[PAGES 5-45 THROUGH 5-50 RESERVED]

CHAPTER 2. AIRLINE TRANSPORT PILOT CERTIFICATES

SECTION 2. FLIGHT TEST EVENTS IN AIRPLANES

75. APPLICABILITY. Sections 2 through 6 of this chapter provide inspectors and designated examiners with detailed guidance for the conduct of airline transport pilot (ATP) flight tests, conducted in the qualification curriculum segments of Federal Aviation Regulations (FAR) Parts 121 and 135 training programs. This guidance has been specifically developed to account for the conditions encountered in such programs, particularly for the wide variation in aircraft, simulators, and educational delivery systems currently used by FAR Parts 121 and 135 operators. Inspectors and designated examiners shall observe this guidance while conducting these flight tests instead of the guidance in either FAA Order 8700.1, "General Aviation Inspector's Handbook" which applies to the testing of applicants trained and tested outside FAR Parts 121 and 135 training programs, where different conditions prevail. Section 2 of this chapter contains general direction and guidance for the conduct of all flight tests, regardless of whether a test is conducted in a flight training device (FTD), a flight simulator, or an airplane. Section 3 contains specific guidance for the conduct of flight tests in an FTD or a flight simulator. Section 4 contains specific guidance for the conduct of flight tests in an airplane. Sections 5 and 6 contain specific guidance for the conduct of flight tests in a helicopter.

77. ORAL TEST EVENTS. Inspectors and examiners should use the "ATP/Type Rating Oral Test—Airplane" job aid when conducting oral tests for ATP certificates with airplane category ratings or for airplane type ratings being added to ATP certificates (see figure 5.2.2.1.). The topics to be examined are printed on the job aid in an abbreviated form. Most of the topics are self explanatory; however, a discussion of selected topics for pilot applicants of airplanes requiring a flight engineer (FE) follows:

A. FE's Station. On airplanes requiring an FE, a pilot applicant must demonstrate a knowledge of controls and indicators at the FE's station. The applicant's level of knowledge must be sufficient for safe operation of the airplane if the FE is incapacitated or absent from the flight deck.

B. Takeoff Data. Although the duty of computing takeoff and landing data is usually accomplished by the FE, pilot applicants must be able to complete typical takeoff and landing data computations. These computations must include application of proper corrections (such as a contaminated runway, inoperative anti-skid, and minimum equipment list (MEL) or configuration deviation list (CDL) penalties).

C. Performance Computations. An applicant must demonstrate the ability to extract aircraft performance data (such as maximum allowable altitude, cruise power settings, and drift-down performance from the aircraft performance charts).

D. Weight and Balance. An applicant must demonstrate the ability to compute or validate weight and balance using the operator's procedures.

79. WAIVER AUTHORITY. FAR § 61.157(c) authorizes inspectors and examiners to waive certain events on the flight test as specified in FAR Part 61, Appendix A. Events that may be waived totally or partially are indicated on the job aids. The following guidance applies to the use of waiver authority:

A. The use of waiver authority is not automatic. Inspectors and examiners are cautioned to exercise judgment in the use of this authority. When an applicant demonstrates a high level of performance, inspectors and examiners should make liberal use of the waiver authority. When an applicant's performance approaches minimum acceptable standards, however, none of the events of the flight test should be waived.

B. Inspectors and examiners are cautioned that some waiver provisions apply to portions of a series of events rather than to the whole event (for example, the stall series). Other events have specific conditions that must be fully met before waiver authority may be exercised (for example, the second nonprecision approach). A discussion of the conditions and limitations of waiver authority is included with the discussion of the specific events in the following paragraphs.

81. PREPARATION AND SURFACE OPERATIONS EVENTS. Applicants shall be observed performing interior, exterior, and emergency equip-

ment inspections and performing engine start, taxi, and powerplant checks in accordance with the operator's aircraft operating manual.

A. Exterior Inspection. The exterior inspection is not an extension of the oral phase in which systems knowledge is examined, but rather a demonstration of an applicant's ability to perform appropriate safety checks. Inspectors and examiners shall limit questions to only those necessary for determining if an applicant can recognize when a component is in an unsafe condition. The exterior inspection may be conducted before or after the flight test at the inspector's or examiner's discretion. Many operators have exemptions permitting the exterior preflight test event to be conducted using pictorial means. The exterior inspection may be waived when an FE is a required crewmember. When the exterior inspection is waived, pilot applicants shall be required to complete those cockpit, interior, and emergency equipment inspections defined as the pilot-in-command's (PIC) responsibility. Inspectors and examiners shall determine whether an applicant inspects these items in accordance with the procedures in the operator's aircraft operating manual.

B. Cabin Inspection. An applicant shall be evaluated on the ability to perform a cabin inspection when this inspection is specified as a PIC responsibility by the operator's aircraft operating manual. Inspectors and examiners should occasionally sample an applicant's knowledge of the location and use of emergency equipment in the cabin, and the operation of cabin doors, even when the cabin inspection is not designated as a flight crewmember responsibility.

C. Cockpit Preflight Inspection. An applicant shall be required to complete the cockpit preflight checks using the procedures specified in the operator's aircraft operating manual and using the appropriate checklists. The proper challenges and responses to the checklist must be used. When the flight test is conducted in a flight simulator, it is appropriate for the inspectors or examiners to present minor malfunctions to determine if the applicant is accurately performing the specified checks.

D. Engine Start Procedures. An applicant shall be required to perform an engine start using the correct procedures. When the flight test is conducted in a flight simulator, it is appropriate for inspectors and examiners to present an abnormal condition such as a hot-start or malfunctioning air or start valve. The abnormal condition should be carried through to the expected conclusion in line operations, for the purpose of evaluating crew coordination and the applicant's proficiency.

E. Taxiing or Sailing. Inspectors and examiners shall evaluate the applicant's ability to safely maneuver the airplane on the surface and to manage outside vigilance while accomplishing cockpit procedures. The applicant must ensure that the taxi path is clear of obstructions, comply with local taxi rules and control tower instructions, properly use checklists, and maintain control of the crew and airplane.

F. Powerplant Checks. Powerplant checks must be accomplished in accordance with the appropriate checklist and procedures before takeoff. In a flight simulator, inspectors and examiners should present appropriate instrument or system malfunctions to determine if the applicant is accurately performing these checks.

83. TAKEOFF EVENTS. An applicant shall be required to accomplish each of the following takeoff events. These events may be combined when convenient and practical.

A. Normal Takeoff. A normal takeoff is defined as a takeoff beginning from a standing or rolling start (not from a touch and go) with all engines operating normally during the takeoff and initial climb phase.

B. Instrument Takeoff. An instrument takeoff is defined as one in which instrument conditions are encountered or simulated at or before reaching an altitude of 100 feet above airport elevation. In a flight simulator, the visibility value should be set to the minimum authorized by the operator's operations specifications. An applicant shall be evaluated on the ability to control the airplane, including making the transition to instruments as visual cues deteriorate. An applicant must also be evaluated on the planning of the transition to an instrument navigation environment. This event may be conveniently combined with an area departure.

C. Engine Failure on Takeoff (For Multiengine Airplanes). An applicant must demonstrate the ability to maintain control of the airplane and to continue a takeoff with the failure of the most critical powerplant. When the flight test is conducted in an airplane, the failure shall be simulated. The takeoff configuration, airspeeds, and operational procedures must be in accordance with the operator's aircraft operating manual. When the flight test is conducted in two segments (simulator and airplane), this event shall be conducted in the simulator segment of the flight test. This event should not be repeated in the airplane portion of the flight test unless an unusual situation occurs.

(1) When the flight test is being conducted in an airplane belonging to the transport and commuter category family, the engine failure shall be introduced at a speed after V_1 and before V_2, and appropriate

to the airplane and the prevailing conditions. When either V_1 and V_2 or V_1 and V_R are identical, the failure shall be introduced as soon as possible after V_1 is passed.

(2) When the flight test is conducted in an airplane not in the transport and commuter category family, the engine failure shall be introduced at a speed and altitude that is appropriate for the airplane.

NOTE: Some nontransport multiengine airplanes cannot climb or maintain altitude with an engine out. When conducting a flight test in such an airplane, inspectors and examiners should use their authority to modify this event. For example, an engine failure recognition problem and engine shutdown may be performed at a safe altitude.

D. Rejected Takeoff. A rejected takeoff is a potentially hazardous situation that flightcrews must be trained to handle correctly. As a testing event it must be presented in a realistic and meaningful manner. The event is a test of an applicant's ability to correctly respond to a critical situation and to correctly manage the actions necessary for safeguarding the airplane and passengers once the airplane is brought to a stop.

(1) When a flight test is conducted in a flight simulator, performance parameters should be adjusted to make the takeoff critical. For example, the temperature and airplane weight can be adjusted so that takeoff performance is runway-limited. Another technique is to lower the visibility and make the runway wet, presenting the applicant with a tracking problem. Inspectors and examiners should take care in selecting the malfunction used to induce the reject response. The malfunction should be one that clearly and unequivocally requires rejection of the takeoff. The malfunction should be introduced at a speed that is as close to V_1 as possible, yet still allowing the applicant enough time to perceive and respond to the problem before reaching V_1. It is appropriate for inspectors and examiners to occasionally introduce a problem in a way that leads to an evacuation of the aircraft. This event shall not be waived in a flight simulator.

(2) When a flight test is conducted in an airplane belonging to the transport and commuter category family, a rejected takeoff at approximately V_1 can be unsafe and can cause damage to the airplane. Inspectors and examiners are expected to use caution when inducing a rejected takeoff in an airplane for flight test purposes. For this event to be meaningful, it should be introduced at a speed close to V_1. Therefore, inspectors and examiners are authorized to waive this event and should do so when the airplane weight, ambient temperature, and tire limits preclude the event from being conducted in a realistic manner. In other families of airplanes, the rejected takeoff shall be performed at a speed of less than 50 percent of V_{MC}.

(3) An applicant must be able to recognize the need to initiate a rejected takeoff, perform the correct procedures in a timely manner, and to bring the airplane to a stop on the runway. Once the airplane or flight simulator is brought to a stop, appropriate procedures must be initiated. Consideration must be given to the possibility of overheated brakes and fire.

E. Crosswind Takeoffs. A crosswind takeoff from a standing or rolling start (not a touch and go) must be evaluated to the extent practical on all flight tests. FAR Part 61, Appendix A, does not allow crosswind takeoffs to be waived. When appropriate, a crosswind takeoff may be evaluated simultaneously with other types of takeoffs.

(1) When the flight test is conducted in an airplane, inspectors and examiners will usually have very little control over existing meteorological, airport, and traffic conditions. Inspectors and examiners are expected to make a reasonable attempt to evaluate a takeoff on a runway not favorably aligned with the prevailing wind. It will frequently be necessary, however, to evaluate this event with the crosswind component that exists on the active runway.

(2) Flight simulators are capable of realistically duplicating crosswinds. Crosswind takeoffs shall be evaluated on all flight tests conducted in a flight simulator. The crosswind component entered in the simulator computer shall be between 10 and 15 knots. Occasionally, however, the crosswind components should be in excess of 15 knots, but must not exceed the crosswind component allowed by the operator's aircraft operating manual, or the maximum demonstrated value given in the approved airplane flight manual (AFM). The purpose of testing at such higher crosswind components is to determine whether applicants are being trained throughout the range of the flight envelope. When level A simulators are used, principal operations inspectors (POI) must determine the maximum values at which the crosswind simulation is realistic.

85. CLIMB, EN ROUTE, AND DESCENT EVENTS.

A. Area Departures and Arrivals. The area departure and arrival events should include intercepting radials, tracking, and climbs or descents with restrictions. Whenever practical, a standard instrument departure or standard arrival should be used. Many of the standard procedures, however, are not suitable for the purpose of testing an applicant's abilities. For

example, common radar departures are essentially initial climb instructions for a radar hand-off and provide little opportunity for testing an applicant's ability to set up and use the navigation equipment normally used on an area departure. If a suitable published procedure is not available and circumstances allow, the inspector or examiner should give a clearance that presents the desired tests. Inspectors and examiners should allow applicants to use all installed equipment. The autopilot may or may not be used at the inspector's or examiner's discretion. The applicant's use of navigation equipment, and other crewmembers, and the applicant's ability to adhere to air traffic control (ATC) clearances and restrictions shall be evaluated. Inspectors and examiners may waive one, but not both, of these events. Under normal circumstances, one of the two events should be waived.

B. Holding. Inspectors and examiners should give holding clearances with adequate time available for the applicant to identify the holding fix, select the appropriate speed, and plan the entry. Applicants should be allowed to use all aids normally available in the cockpit (such as winddrift readouts). At least the initial entry and one complete turn in the holding pattern should be completed before another clearance is issued. The applicant's performance shall be evaluated on the basis of compliance with the holding procedures outlined in the operator's aircraft operating manual, compliance with instructions issued by ATC, and the published holding pattern criteria. Holding airspeed must be as specified by the operator's aircraft operating manual; however, it must not be allowed to exceed the regulatory limit. If the operator's manual requires a speed higher than that allowed by regulation, the applicant must resolve the conflict by requesting an amended ATC clearance or by selecting an aircraft configuration in which it is safe to comply with the regulatory speed. Inspectors and examiners should waive holding when an applicant's performance on other events has indicated a high degree of proficiency.

C. Steep Turns. This event consists of a level turn in each direction with a bank of 45 degrees, continuing for at least 180 degrees, but not more than 360 degrees. Airspeed, altitude, and bank angle must be controlled within the tolerances specified on the job aids. Inspectors and examiners shall direct special attention to an applicant's smoothness, coordination, and orientation. Steep turns may be waived, and should be if an applicant's performance on other events has indicated a high degree of proficiency.

D. Approaches to Stalls. Inspectors and examiners shall evaluate the applicant's ability to recognize and recover from an approach to a stall in three separate airplane configurations. The three configurations are the clean configuration, the takeoff configuration, and the landing configuration. When the airplane uses only a zero-flap takeoff configuration, the takeoff configuration and the clean configuration stall are combined and only two stalls are required. At least one stall must be performed while in a turn with a bank angle between 15 and 30 degrees.

(1) Approaches to stalls should be entered by increasing the angle of attack smoothly, so that the airspeed decreases at a uniform rate. The use of power during approach to and recovery from stalls should be as specified in the operator's aircraft operating manual.

(2) When stalls are performed in an airplane, the operator's minimum entry and recovery altitudes must be observed. When stalls are performed in a flight simulator or FTD, the operator's minimum entry and recovery altitudes do not have to be observed, and an altitude that is realistic from a performance standpoint and convenient (in terms of the sequence of events) may be used.

(3) When the flight test is conducted in a flight simulator or FTD, inspectors and examiners shall occasionally require an applicant to recover from a high altitude stall. Evaluation of stalls in various flight regimes should be accomplished to determine whether the operator's training program has adequately prepared applicants for flight in those regimes.

(4) An applicant must recognize the first indication of the approaching stall and immediately initiate recovery with a minimal loss of altitude. An actual stall should not be allowed to develop. Procedures used must be in accordance with the operator's aircraft operating manual. Inspectors and examiners may waive all but one of the stalls. This waiver authority should be used when an applicant's performance in other events indicates a high degree of proficiency.

E. Specific Flight Characteristics. This event consists of recovery from flight characteristics specific to the airplane type, such as a dutch-roll or a high rate of descent. These specific flight characteristics, when applicable, are specified in the Flight Standardization Board (FSB) report for the particular airplane type. Inspectors and examiners shall evaluate an applicant on recognition and recovery from these specific flight characteristics, when applicable. The procedures used for recovery must be those specified in the operator's aircraft operating manual. When applicable, this event may be waived. This event should be waived, when the applicant's performance in other events indicates a high degree of proficiency.

87. APPROACH EVENTS. The approaches described in this paragraph are required on all flight tests. They may be combined when appropriate.

A. Instrument Landing System (ILS) or Microwave Landing System (MLS) Approaches. Inspectors and examiners shall require applicants to fly a minimum of one normal (all-engines operative) ILS or MLS. In addition, when multiengine airplanes are used, one manually controlled ILS or MLS with a powerplant failure is also required. When the flight test is conducted as a two-segment flight test, a manually controlled, normal ILS or MLS must be flown in the airplane segment of the flight test.

(1) When the operator's aircraft operating manual prohibits raw data approaches, the flight directors must be used during the manually controlled ILS or MLS approaches. In this case, a raw data approach is not required to complete the flight test.

(2) If the operator's aircraft operating manual permits raw data ILS approaches to be conducted, the operator must provide training in the use of raw data for controlling an aircraft during ILS approaches. If the operator's aircraft are equipped with a flight director system, the flight director must be used on at least one manually controlled ILS approach. While a raw data approach is not required to complete a flight test, inspectors and examiners should occasionally require a raw data approach to determine whether the operator's training program is adequately preparing applicants.

(3) For all raw data and flight director ILS or MLS approaches flown in a flight simulator or FTD, inspectors and examiners shall require applicants to use a decision height (DH) of 200 feet above the touchdown zone. When raw data is used on ILS or MLS approaches in an airplane, inspectors and examiners shall require applicants to use a DH of 200 feet above the touchdown zone. When the flight director is used on ILS or MLS approaches in an airplane, inspectors and examiners shall require applicants to use a DH of 100 feet above the touchdown zone. However, if the applicant has accomplished an ILS using a 200 foot height above touchdown (HAT) in the simulator segment of the flight test, the published DH shall be used in the airplane portion of the test. The DH shall be determined by barometric altimeter. Inspectors and examiners shall inform applicants that this DH is for flight test purposes only and does not correlate to any minimums used in actual operations. If the flight test is being conducted in actual weather conditions, the DH shall be the published decision height. The applicant must be able to track the localizer and glideslope smoothly and without significant excursion during the final approach segment. The localizer indication shall not exceed 1/4 scale deflection at DH. When the ILS indicator is calibrated with the first dot at the 1/2 scale deflection point and a second dot at the full-scale point, the deflection at DH must not exceed half the distance to the first dot. The glideslope shall not exceed 1/2 scale deviation (one dot) at decision height.

(4) When the operator's airplanes are equipped with autopilot couplers, at least one coupled autopilot ILS or MLS approach must be flown. If the autopilot has the capability and the operator is authorized by operations specifications to conduct automatic landings, the coupled approach shall terminate in either an autolanding or a coupled missed approach. When an autoland is conducted, it shall not be credited as one of the three required manually controlled landings. When the flight test is conducted entirely in an aircraft or entirely in a flight simulator, the autopilot coupled approach may be combined with the normal ILS (all-engines operative) approach. This combination is permitted because the applicant's ability to manually control an ILS approach is evaluated on the ILS with an engine out.

(5) Qualification for Category (CAT) II and CAT III operations are not part of a type rating or ATP flight test. To satisfy the requirements for these types of operations, additional events that are not required for the ATP certificate or a type rating will normally be required. The qualification checks for these types of operations, however, may be conducted in conjunction with an ATP or type rating test as a convenience to the operator and the applicant. However, if one of these additional events is unsatisfactory, the entire flight test is unsatisfactory. Therefore, the choice of whether to combine these events with the certification flight test is up to the applicant. Inspectors and examiners shall ensure that applicants understand these ground rules before conducting these additional events in conjunction with a certification test.

(6) Qualification check requirements for CAT II and CAT III operations, including the required number and types of approaches are established by the operator's approved training program. If an applicant is simultaneously qualifying for these authorizations during the certification flight test, the approaches discussed in subparagraphs (1), (2), and (3) may be credited toward these requirements when the approach requirements are compatible.

(7) Inspectors and examiners shall use a crosswind component of 8 to 10 knots (not to exceed 10 knots) on at least one of the ILS or MLS approaches conducted in a flight simulator. The use of this crosswind is to evaluate the applicant's ability to track the

localizer and not the applicant's ability to accomplish a crosswind landing.

(8) When the flight test is conducted in a flight simulator or FTD, the runway visual range (RVR) should be set to the minimum value specified for the approach. If the inspector or examiner plans for the applicant to acquire the runway and to continue below DH, the ceiling should be set to a value of approximately 50 feet above HAT (the exact value depends on the characteristics of the specific simulator). When the flight test is conducted in an airplane, the vision restriction device must remain in use until just before the airplane arrives at the DH used for the flight test.

(9) Flightcrew procedures, airplane configuration, and airspeeds must be as specified in the operator's aircraft operating manual. Turbojet airplanes must be stabilized before descending below 1,000 feet above the touchdown zone.

B. Nonprecision Approaches. Inspectors and examiners shall require applicants to demonstrate two nonprecision instrument approaches that are authorized in the operator's operations specifications. The second approach must be based on a different type of navigational aid (NAVAID) than the first approach. The second approach may be waived, if an applicant demonstrates a high degree of proficiency on the first approach and the applicant's training records or instructor certification show that the applicant has satisfactorily completed the nonprecision approach training requirements.

(1) Inspectors and examiners shall allow the applicant to use any aid normally available in the cockpit, such as the flight director and drift and groundspeed readouts. Many operators train their pilots to perform nonprecision approaches using the autopilot. At least one nonprecision approach must be manually flown on the flight test, except when the operator's manual prohibits manually flown nonprecision approaches.

(2) When nonprecision approaches are conducted in a flight simulator, a crosswind component of 10 to 15 knots shall be used on at least one of the nonprecision approaches. The purpose of the crosswind component is to test an applicant's ability to track the approach course, not to evaluate crosswind landings. Crosswind landings, however, may be combined with a nonprecision approach.

(3) In an airplane, the vision restriction device shall remain in use until the airplane arrives at minimum descent altitude (MDA) and a distance from the runway approximating the required visibility for the approach. In a flight simulator or FTD, inspectors and examiners shall enter a ceiling of approximately 50 feet higher than the published MDA. A visibility value of approximately 1/4 mile greater than the published minimums value shall be used, depending on the characteristics of the particular flight simulator or FTD.

(4) When tracking is accomplished by means of an automatic direction finder (ADF) bearing pointer, the tolerance is ± 5 degrees of the final approach course. When tracking a localizer signal, the tolerance is a 1/4 scale deviation (1/2 DOT). When tracking a very high frequency omnidirectional range station (VOR) signal, the tolerance is a 1/4 scale deviation of the course deviation indicator. The reason for these tolerances is terrain. Also, at the visual descent point or its equivalent, the aircraft must be in a position that it can be aligned with the runway without excessive maneuvering. Turbojet airplanes must be stabilized before descending below the MDA or 500 feet, whichever is lower.

C. Circling Approach Maneuver. Operators are not required to train flight crewmembers in circling approach maneuvers if the operator's manual prohibits such maneuvers with a ceiling below 1,000 feet and a visibility of less than 3 miles. Inspectors and examiners shall waive this event if the operator does not train flight crewmembers for the maneuver. If the operator provides training on the circling maneuver, it may be waived when local conditions beyond the control of the inspector or examiner, such as traffic or available approaches, prevent the maneuver from being conducted in a realistic manner.

(1) For the purpose of flight testing, the visual maneuvering portion of a circling maneuver begins at the circling MDA of a nonprecision approach and requires a change in heading from the final approach course to the runway heading of at least 90 degrees. The inspector or examiner, however, is authorized to modify this event. For example, when traffic conditions preclude a circling approach, if tower approval is attained, the visual portion of the event can be entered from a modified visual flight rules (VFR) traffic pattern at a point downwind and abeam the touchdown point.

(2) The angle of bank for a circling maneuver should not exceed 30 degrees. Altitude and airspeed must not exceed the tolerances specified on the job aid. The airplane must not descend below MDA until the runway environment is clearly visible to the applicant, and the airplane is in a position for a normal descent to the touchdown point. Turbojet airplanes must be stabilized in the landing configuration before descending below the MDA or 500 feet above touchdown zone elevation, whichever is lower.

D. Maneuver To a Landing With 50 Percent of Powerplants Inoperative. Inspectors and examiners shall require an applicant to demonstrate an approach and landing with 50 percent of powerplants inoperative.

(1) Inspectors and examiners should introduce this event in a realistic manner. Consideration should be given to the airplane weight, atmospheric conditions, and airplane position. The airplane position, when the engine failure is introduced (second engine in a three- or four-engine airplane) should provide enough room for the applicant to maneuver the aircraft. In the simulator, the weight should be adjusted to simulate realistic conditions but still allow the applicant enough time to exercise judgment. In a three-engine airplane, this event must be performed with the center and an outboard engine failed. In a four-engine airplane, both powerplant failures must be on the same side.

(2) In two-engine airplanes, the engine-out ILS or MLS may be credited simultaneously with this event. In three- and four-engine aircraft, this event should be conducted in visual conditions. A visual pattern should be used rather than a vector to the final approach, so that the applicant's judgment with respect to maneuvering the airplane can be evaluated. When this event is conducted in a flight simulator, the electronic glideslope or visual approach slope indicator (VASI) shall not be made available for the applicant's use. In the airplane, it may not be possible to have the VASI's turned off. In daylight conditions, however, inspectors and examiners should request that the VASI be turned off. In an airplane at night, an electronic glideslope or VASI must be available and used.

> *FYI: An approach with a simulated failure of the most critical powerplant must always be performed in the airplane segment of a two-segment flight test. That event is required in the airplane segment, even when a maneuver and landing with 50 percent of powerplants inoperative has already been previously accomplished in a flight simulator.*

E. No-Flap or Partial-Flap Approach. Inspectors and examiners shall require an applicant to perform a no-flap approach in all airplanes except those airplanes that have alternate flap extension procedures and in which the FSB has determined that no-flap approaches are not required. If a no-flap approach is not required, the FSB may still require that a partial-flap approach be accomplished. In this case, inspectors and examiners are only required to evaluate an applicant's demonstration of a partial-flap approach. However, inspectors and examiners may evaluate applicants conducting partial-flap or no-flap approaches any time procedures for such approaches are published in the operator's aircraft operating manual.

(1) For either a partial or no-flap approach, the limitations specified for the use of VASI and electronic glideslope guidance in the 50 percent engine failure maneuver (see subparagraph 87D(2)) apply. The approach shall be flown from a visual pattern from at least a downwind position, so that the applicant may be evaluated on planning for the approach. The approach should be presented in a realistic manner. In a flight simulator, inspectors and examiners shall adjust the landing weight to require an applicant to exercise judgment in matters such as approach speed and runway limitations.

(2) When the flight test is conducted in a transport or commuter category airplane, a touchdown from a no-flap or partial-flap approach is not required and shall not be attempted. The approach must be flown to the point that the inspector or examiner can determine whether the landing would or would not occur in the touchdown zone. In a flight simulator, the landing must be completed to a full stop so that the applicant's ability to control the airplane and to use correct procedures may be evaluated.

> **NOTE: The events required in subparagraphs 87D and E should be conducted in a flight simulator whenever practical. These events should not be repeated in the airplane segment of the flight test unless an unusual situation occurs.**

F. Acceptable Performance for Approach Events. The airspeed and altitude on downwind and base leg, or on an intercept to final approach must be as specified in the operator's flight manual. The airspeed on final approach must be adjusted for wind and gusts in accordance with the flight manual and must be positively and accurately maintained throughout the approach. The approach angle must be controlled and be appropriate to both the airplane and approach being flown. If a windshear or a ground proximity warning should occur, an applicant must respond in a prompt and positive manner. For turbojets, the approach must be stabilized, the airplane in the landing configuration, with a sink rate of less than 1,000 feet per minute (FPM), not later than the following heights:

(1) For all straight-in instrument approaches, the approach must be stabilized before descending below 1,000 feet above the airport or touchdown zone.

(2) For visual approaches and landings, the approach shall be stabilized before descending below 500 feet above the airport elevation.

(3) For the final segment of a circling approach maneuver, the approach must be stabilized 500 feet above the airport elevation or at the MDA, whichever is lower.

NOTE: Use of the stabilized concept is mandatory for all turbojet aircraft operations. It is recommended for all propeller-driven aircraft and rotorcraft when conducting operations in instrument flight rules (IFR) weather conditions.

89. LANDING EVENTS. A total of three manually controlled landings must be accomplished on all flight tests. When a two-segment, flight simulator and airplane flight test is conducted, a minimum of three manually controlled landings must be performed in the airplane. If the flight test is conducted in an amphibious airplane, one landing must be on water. The required events are as follows:

A. Normal Landings. A normal landing is defined as a manually controlled landing in the normal landing configuration (as specified in the operator's aircraft operating manual), with normal power available, and without reference to an electronic glideslope. A normal landing can be accomplished from either a visual pattern or from a nonprecision approach.

B. Crosswind Landings. A manually controlled landing with a crosswind must be accomplished on all flight tests. FAR Part 61, Appendix A, does not permit crosswind landings to be waived. The crosswind landing may be combined with any other landing event.

(1) When the flight test is conducted in an airplane, inspectors and examiners usually have little control over existing meteorological, airport, and traffic conditions. As such, an inspector or examiner is expected to make a reasonable attempt to evaluate a landing on a runway not favorably aligned with the prevailing wind. It will frequently be necessary, however, to evaluate this event with the crosswind component currently existing on the active runway.

(2) Flight simulators are capable of realistically duplicating a crosswind for landing. Crosswind landings must be evaluated on all flight tests conducted in flight simulators. The crosswind component entered in the simulator computer shall be between 10 to 15 knots. Occasionally, however, the crosswind components should be in excess of 15 knots, but must not exceed the crosswind component allowed by the operator's aircraft operating manual (or the maximum demonstrated value given in the AFM). The purpose of testing at such higher crosswind components is to determine whether applicants are being trained throughout the range of the flight envelope. When level A simulators are used, POI's must determine the maximum values at which the crosswind simulation is realistic. Crosswind landings should normally be performed from a VFR traffic pattern, but may be accomplished from a nonprecision approach.

C. Landing in Sequence from an ILS or MLS Approach. On the landing from an ILS or MLS approach, the runway environment should become visible to the applicant as close as possible to the DH being used for the flight test. The applicant must complete the landing without excessive maneuvering and within the touchdown zone. The approach angle must not be erratic, excessively steep, or shallow in the visual segment.

D. Accuracy Landings (Single-Engine Only). The accuracy landing event consists of three approaches and spot landings from an altitude of 1,000 feet or less, with the engine throttled and an approach requiring a 180-degree change of heading. (''Throttled'' means that as power is reduced, it shall not again be increased above that point until after touchdown.) Touchdown must be in a normal landing attitude and configuration, beyond but within 200 feet of a designated point. One of the three landings must be from a forward slip. Although circular approaches are acceptable, two 90-degree turns with a straight base leg are preferred. This event is not required if the applicant holds a commercial pilot certificate.

E. Rejected Landing. The rejected landing shall be initiated from a point approximately 50 feet above the runway. This event may be combined with an instrument missed approach.

F. Engine-Out Landing. One landing with the most critical powerplant inoperative must be evaluated. When a two-segment flight test is conducted, this event must be performed in the airplane. When conducted in an airplane, the engine failure shall be simulated.

G. Landing with 50 Percent of Powerplants Inoperative. A landing with 50 percent of powerplants inoperative must be evaluated. In a three-engine airplane, the event must be performed with the center and one outboard engine inoperative. In a four-engine airplane, both powerplant failures must be on the same side. When this event is conducted in an airplane, the engine failures shall be simulated.

H. No-Flap or Partial-Flap Landings. No-flap or partial-flap landings are not required to complete the flight test. When the flight test is conducted in a transport category airplane in actual flight, a touch-

down from a no-flap or partial-flap approach is not required and shall not be attempted. The approach must be flown to the point that the inspector or examiner can determine whether the landing would or would not occur in the touchdown zone. In a flight simulator, the landing should be completed to a full stop so that the applicant's abilities to control the aircraft and use correct procedures under abnormal circumstances may be evaluated. For example, the aircraft might have a pitch-up tendency with spoiler extension in the no-flap or partial-flap landing configuration.

I. Acceptable Performance for Landing Events. Landings must be in the touchdown zone, at the correct speed for the airplane, without excessive float, and on the runway center line. The rate of descent at touchdown must be controlled to an acceptable rate for the airplane involved. Side load on the landing gear must not be excessive, and positive directional control must be maintained through the rollout. Management of spoilers and thrust reversers must be in accordance with the operator's aircraft operating manual.

91. MISSED APPROACH EVENTS. Missed approaches from two separate instrument approaches are required to complete the flight test. At least one missed approach must be flown through the entire missed approach procedure, unless traffic or ATC restrictions prevent completing the entire procedure. One missed approach is required from an ILS or MLS. When the flight test is conducted in a multiengine airplane that has a single-engine climb capability, one missed approach should be accomplished with the most critical powerplant inoperative. The engine-out and ILS or MLS missed approaches may be combined; however, to complete the flight test, at least two missed approaches are required. When the flight test is a two-segment flight test, the engine-out missed approach should be accomplished in the simulator segment.

A. When a flight test is conducted in an airplane that does not belong to the transport or commuter category family, airplane performance may be critical. Inspectors and examiners should use their authority to modify the event. For example, a missed approach may be combined with a simulated powerplant failure at a safe altitude.

B. A missed approach from an approach with 50 percent of powerplants inoperative is not required to complete the flight test for three- and four-engine airplanes. However, when procedures for 50 percent of powerplant-inoperative missed approaches are published in the operator's aircraft operating manual, inspectors and examiners may evaluate the event to determine if applicants are being trained to proficiency in the event. When this event is conducted in a three-engine airplane, the center and one outboard engine must be inoperative. When this event is conducted in a four-engine airplane, two engines on the same side must be inoperative. When the missed approach event is conducted in an airplane, the engine failures shall be simulated.

C. When a flight test is conducted in a flight simulator or FTD, inspectors and examiners should make use of the "trouble buttons," as well as weather, to induce the missed approach decision. For example, many flight simulators have provisions to offset the localizer so that the airplane is not in a position to continue the approach below DH.

D. Applicants must promptly execute the missed approach procedure if the runway environment is not acquired at DH on an ILS or MLS approach. If the runway environment is not in sight on a nonprecision approach, or if the aircraft is not in a position to land at the missed approach point, the applicant must initiate a missed approach. Should conditions prevent continuation of any type of approach at any point, the applicant must initiate a missed approach. For example, a missed approach above DH might be required when an instrument failure flag appears. A missed approach is required if the aircraft is below DH or MDA and cannot be properly aligned with the runway or if the applicant loses sight of the runway environment. An applicant must adhere to the published missed approach or the instructions given by ATC and observe the procedures and limitations in the operator's aircraft operating manual. An applicant must properly use the available aids and other crewmembers when making the transition back to the instrument navigation environment.

93. NORMAL AND ABNORMAL PROCEDURES. Inspectors and examiners shall require an applicant to demonstrate the proper use of as many of the airplane's systems and devices as necessary to determine if the applicant has a practical knowledge of the use of these systems. Evaluation of normal and abnormal procedures can usually be accomplished in conjunction with other events and does not normally require a specific event to test the applicant's use of the airplane's systems and devices. An applicant's performance must be evaluated on the maintenance of aircraft control, the ability to recognize and analyze abnormal indications, and the ability to apply corrective procedures in a timely manner. Systems to be evaluated include, but are not limited to, the following:

- Anti-icing and deicing systems
- Autopilot systems

- Automatic or other approach system aids
- Stall warning devices, stall avoidance devices, and stability augmentation devices
- Airborne radar devices
- Any other available systems, devices, or aids, such as flight management systems (FMS)

95. EMERGENCY PROCEDURE EVENTS. An applicant must be able to competently operate all installed emergency equipment and to correctly apply the procedures specified in the operator's aircraft operating manual.

A. Powerplant Failures. Inspectors and examiners may introduce malfunctions requiring an engine shutdown at any time during the flight test. This provision is not intended as authority to require an unrealistic number of failures, but to permit such failures at times when they are most appropriate. Powerplant failures should be limited to those necessary for determining an applicant's proficiency. An applicant must promptly identify the inoperative engine and initiate correct action while maneuvering the airplane safely. If the airplane is not capable of maintaining altitude with an engine inoperative, the applicant is expected to maintain the best engine-out climb speed while descending. Smooth application of flight controls and proper trim are required.

B. Other Emergency Procedures. Inspectors and examiners should sample as many of the following events as necessary for determining whether an applicant is proficient in identifying and responding to emergency situations:

- Fire in flight
- Smoke control
- Rapid decompression
- Emergency descent (with and without structural damage)
- Hydraulic and electrical system failure or malfunctions (if safe and appropriate)
- Landing gear and flap systems failure or malfunctions
- Navigation or communications equipment failure
- Any other emergency procedures outlined in the operator's aircraft operating manual or training program

97. STANDARDS OF ACCEPTABLE PERFORMANCE. The Airline Transport Pilot Certificate is the highest grade of pilot certificate awarded. An applicant for this certificate must possess a degree of piloting skills beyond that required for lower grades of certificates. The applicant must be the master of the airplane, the crew, and the situation throughout the aircraft's operational envelope. Inspectors and examiners shall sample an applicant's ability to safely and practically operate the aircraft throughout the range of the approved operational envelope. For example, an ATP applicant would be expected to be able to maintain 180 knots to the marker, configure the aircraft, and establish a stabilized approach before descending below 1,000 feet above ground level (AGL) while smoothly tracking the glide slope and localizer.

A. Manipulative Skills. The manipulative skill standards for the ATP certificate are the most rigorous of all pilot certificates issued. The skills requirement for the ATP certificate and for other certificates differs not in the tolerances allowed but in the degree of mastery required. The applicant for an ATP certificate must demonstrate the ability to operate the aircraft smoothly under a complex set of circumstances. The applicant's performance must be such that the inspector or examiner is never seriously in doubt of the successful outcome of each event of the flight test. The determination of whether an applicant's performance is acceptable or not is derived from the experience and judgment of the inspector or examiner. It is imperative that inspectors and examiners be fair and consistent when making their determinations. For example, weather, aircraft responsiveness, traffic, and other factors beyond an applicant's control may cause the applicant to deviate briefly during the accomplishment of a maneuver. In the case of turbulence, the applicant is expected to adhere to the procedures for adjusting the target speed as specified in the operator's aircraft operating manual. In such a situation, an applicant who makes a determined effort, is generally successful in maintaining close control, and who does not deviate to the extent safety is compromised, should be considered to have met the standard.

B. Flight Management Skills. The term "pilot-in-command" implies that the pilot is the leader of a crew and bears the final responsibility for the safe conduct of the flight. This standard, more than any other, distinguishes the successful applicant for an ATP certificate from those holding other grades of certificates. The ATP flight test must not be limited to a simple demonstration of a series of events. An ATP applicant must demonstrate a mastery of complex problems, good judgment, situational awareness, cockpit management, and leadership skills.

98.–104. RESERVED.

FIGURE 5.2.2.1.
ATP/TYPE RATING ORAL TEST JOB AID—AIRPLANE

THE ORAL TEST

[ ] A. Knowledge of aircraft systems:

[ ]	Hydraulic	[ ]	Electrical
[ ]	Pneumatic	[ ]	Powerplants
[ ]	Flight instruments	[ ]	Flight controls
[ ]	Landing gear, wheel	[ ]	Autopilot, F/D
[ ]	EFIS, FMS	[ ]	Navigation systems
[ ]	Fuel	[ ]	Propellers
[ ]	Pressurization	[ ]	Air conditioning

[ ] B. Knowledge of, and ability to, compute performance data, takeoff, landing, and cruise performance

[ ] C. Knowledge of the flight engineer station

[ ] D. Weight and balance

[ ] E. Ability to perform or state immediate action items

[ ] F. Knowledge of, and ability to, state operating limitations

[ ] G. Knowledge of MEL

[PAGES 5-62 THROUGH 5-68 RESERVED]

CHAPTER 3. FLIGHT ENGINEER CERTIFICATE AND CLASS RATINGS

SECTION 1. APPLICATION PHASE

221. APPLICABILITY. This chapter provides direction, guidance, and procedures for the conduct of flight engineer (FE) certifications, and the addition of class ratings to FE certificates. Inspectors and examiners should refer to the direction and guidance in chapter 1, which is general information and applies to FE certification. The material in chapter 1 is not repeated in this chapter.

223. ELIGIBILITY FOR THE FLIGHT ENGINEER WRITTEN (KNOWLEDGE) TEST. Test examiners administer aeronautical knowledge tests in written form or by computer. Since these tests can be administered by both means, they will be referred to as knowledge tests. Applicants who possess an unrestricted commercial pilot certificate and instrument rating issued by the Federal Aviation Administration (FAA) or an International Civil Aviation Organization (ICAO) member nation may take a knowledge examination without further demonstration of eligibility. Other applicants may not take the FE knowledge test without an inspector having first established their eligibility for the certificate. Applicants must meet all of the eligibility requirements except for age and flight training before being authorized to take an FE knowledge test or being issued an FAA Form 8060-7, "Airman's Authorization for Written Test." Inspectors should use the "Flight Engineer-Knowledge Test Authorization Job Aid" to complete this task (see figure 5.3.1.1.). This job aid is available on the district office Job Aid Disk. The requirements are specified in an abbreviated form on the job aid. A discussion of the eligibility requirements follows:

A. Each applicant for an initial FE certificate must pass the basic knowledge test and a class rating knowledge test. The following three class ratings are on the FE certificate: reciprocating, turbopropeller, and turbojet. The applicant may also take the combined basic and turbojet class rating tests.

B. An applicant for an additional class rating to be added to an FE certificate only needs to take the appropriate class rating knowledge test.

C. Federal Aviation Regulations (FAR) § 63.35(e) permits the principal operations inspector (POI) to authorize FAR Part 121 operators to administer knowledge tests for additional class ratings. Only flight crewmembers employed by the operator and enrolled in the operator's approved FAR Part 121 FE training curriculum, however, may be tested under this provision. In this case, the knowledge test is administered as part of the training program, and an authorization from an FAA inspector is not required for an applicant to take the test.

> *FYI: The provision of FAR § 63.35(e) does not apply to training programs approved solely under FAR Part 63, Appendix C, which have not also been approved under FAR Part 121.*

D. Applicants must be able to read, write, and understand the English language. If there is doubt as to an applicant's ability to read, the inspector shall have the applicant read aloud a short paragraph from an appropriate source, such as an aircraft operating manual. If the inspector doubts the applicant's ability to write in English, the inspector shall read a short statement and have the applicant write it in English. If, on the basis of these tests, the inspector believes the applicant is unable to read, write, and understand the English language, the inspector shall not issue a knowledge test authorization. Instead, the inspector shall refer the matter to the inspector's immediate supervisor. The supervisor shall make a final determination of whether the applicant meets the English language requirement.

E. Applicants must meet one of the practical experience requirements of FAR § 63.37(b), subparagraphs 1 through 7. The practical experience requirements specified by FAR § 63.37(b) that must be accomplished before taking the knowledge test are as follows:

(1) FAR § 63.37(b)(1). The applicant must have accumulated 3 years of diversified practical experience in aircraft and engine maintenance. At least 1 year of this experience must have been on multien-

gine aircraft of 800 horsepower or greater, or the turbine engine equivalent.

(2) FAR § 63.37(b)(2). The applicant must have graduated from a 2-year aircraft and engine maintenance course, of which at least 6 months was devoted to the maintenance of aircraft of 800 horsepower, or greater, or the turbine engine equivalent.

(3) FAR § 63.37(b)(3). The applicant must hold a degree in aeronautical, electrical, or mechanical engineering and 6 months of practical experience in the maintenance of aircraft, 800 horsepower or greater, or the turbine equivalent of the class sought.

(4) FAR § 63.37(b)(4). The applicant must hold an unrestricted commercial pilot certificate and an instrument rating issued by an ICAO member nation.

(5) FAR § 63.37(b)(5). The applicant must have accumulated 200 hours of flight time as pilot-in-command (PIC) or second-in-command (SIC) performing the duties of PIC in a transport category aircraft or a military aircraft of equivalent weight and power, having at least two engines.

(6) FAR § 63.37(b)(6). The applicant must have accumulated 100 hours of flight time as an FE in an aircraft requiring an FE or an aircraft having at least three engines, which has at least 800 horsepower or the equivalent in turbine-powered engines.

(7) FAR § 63.37(b)(7). Within the previous 90 days, the applicant must have completed the ground portion of an approved FAR Part 63, Appendix C, FE training course for the class rating for which the application has been made.

F. When an inspector has verified that the applicant meets the requirements, the applicant is entitled to take the knowledge test. If the applicant plans to take the knowledge test at a different location or at a later date, the inspector shall complete the FAA Form 8060-7. The inspector shall give the applicant the completed FAA Form 8060-7 with instructions to present it to the person conducting the test. The expiration date on the form will be 6 calendar months from the date the form is completed. If appropriate, the inspector should remind the applicant that proof of age will be required for issuance of the certificate.

225. ELIGIBILITY FOR THE ORAL TEST. Before beginning the oral test, the inspector or examiner should obtain and use the "Flight Engineer Oral Test Job Aid" (see figure 5.3.2.1.). This job aid specifies the eligibility requirements in abbreviated form. Inspectors and examiners conducting oral tests may accept an applicant's Aeronautical Center (AC) Form 8080-2, "Airman Written Test Report," with a passing score on the basic or class rating tests as proof that the applicant has met one of the general experience requirements. A "Flight Engineer-Knowledge Test Authorization Job Aid" (figure 5.3.1.1.) signed by an FAA inspector may be accepted as proof of the specific method (FAR § 63.37(b)) by which an applicant has qualified.

A. The applicant must present a current medical certificate of second class or higher.

B. The applicant must complete sections 1 through 6 of the FAA Form 8400-3, "Application for an Airman Certificate and/or Rating," and present it to the inspector or examiner (see figure 5.3.1.2.). An instruction sheet for the completion of this form can be obtained from the district office Job Aid Disk.

C. An applicant who has failed a test segment must provide a copy of the FAA Form 8060-5, "Notice of Disapproval of Application." An applicant who is unable to produce this notice of disapproval must repeat the entire test segment.

D. An applicant for an additional class rating must submit a valid AC Form 8080-2 for the appropriate additional class rating. An applicant may also submit proof of having satisfactorily passed a knowledge test given as part of an approved FAR Part 121 FE training curriculum for the class rating sought.

E. An applicant for an original FE certificate must submit a valid AC Form 8080-2 showing satisfactory results of the basic FE test and the appropriate class rating test. For an original issuance of an FE certificate with a turbojet rating, the applicant may present a report showing a passing grade on the combined test. Inspectors and examiners shall not accept expired knowledge test reports unless the applicant provides written evidence of continued eligibility (see paragraph 227). When satisfactory evidence is presented, the inspector or examiner shall enter the following statement on AC Form 8080-2: "The period of validity of this form has been extended in accordance with the provisions of FAR § 63.35(d)." The inspector or examiner shall sign and date the statement.

F. Applicants qualifying under the provisions of FAR § 63.37(b), subparagraphs (1) through (4), must supply acceptable documentary evidence of completing 5 hours of flight training at the FE station in the airplane type in which the flight test is to be taken. Training in a flight simulator (SIM) or flight training device (FTD) may not be substituted for flight training in the airplane for applicants qualifying under these subparagraphs. The airman conducting the training must hold an FE certificate with appropriate class ratings and be qualified in the airplane.

NOTE: Inspectors and examiners should not confuse the provisions of FAR § 63.37(b)(7) or the Air Transport Association of America (ATA) exemption with this requirement.

G. An applicant qualifying under the provisions of FAR § 63.37(b)(7) must supply training records or a written statement showing completion of the ground training phase of the approved training program.

227. REQUIREMENTS TO EXTEND THE VALIDITY DATE OF AN AIRMAN KNOWLEDGE TEST. An applicant must meet one of two sets of requirements to be eligible for an extension of the validity date of the knowledge test.

A. For Air Carrier Employees. The following criteria apply to flight crewmembers and mechanics employed by a FAR Part 121 or FAR Part 135 operator. Employment by a FAR Part 135 on-demand operator does not qualify an applicant for an extension.

(1) FAR § 63.35 states that the applicant must have been employed as a flight crewmember or a mechanic by a FAR Part 121 operator or a FAR Part 135 commuter operator within the period ending 24 calendar months before the month of passing the knowledge test and must have become employed by a FAR Part 121 or FAR Part 135 commuter at the time of the flight test.

(2) Applicants who are flight crewmembers must have completed initial new-hire training, initial equipment training, or, if appropriate, transition training.

(3) Applicants who are flight crewmembers must be participating in a training program that includes a recurrent training curriculum in accordance with FAR Part 121 or FAR Part 135.

(4) Applicants who are mechanics must meet the currency requirements of FAR Part 65.

(5) Applicants must be currently employed by a FAR Part 121 operator or a FAR Part 135 commuter operator. However, applicants do not need to have been continuously employed by a qualified operator between the time they passed the knowledge test and the time they apply to take the oral and flight tests.

B. For Military Applicants. The following criteria apply to applicants who apply for extensions on the basis of participation in a training program of a scheduled military transport service.

(1) Applicants must have participated in an FE or maintenance training program at the time of passing the knowledge test or must have begun a military training program within 24 calendar months after passing the knowledge test.

(2) Applicants must be currently participating in a military FE or maintenance training program.

229. ELIGIBILITY FOR THE FLIGHT TEST. Before beginning the flight test, the inspector or examiner should obtain and use the "Flight Engineer Flight Test Job Aid" (see figure 5.3.2.2.). An applicant must present training records, logbooks, or a written statement from a company official that shows that FE flight training was accomplished.

A. Graduates of Approved FAR Part 63, Appendix C, FE Training Curriculums. Applicants who are graduates of these curriculums must have completed the flight training specified by the approved curriculum.

(1) All applicants meeting the experience requirement of FAR § 63.37(b)(7), except those holding commercial pilot certificates or higher with instrument ratings, must have completed a minimum of 5 hours of flight training at the FE station in the airplane type that will be used for the flight test.

(2) Applicants meeting the experience requirement of FAR § 63.37(b)(7) and who hold a commercial pilot certificate (or higher) with an instrument rating may complete the entire flight training requirement in a SIM. The training must be conducted with a full crew complement. The SIM does not need to have an operational visual system.

FYI: FAR Part 121 initial and transition FE training programs do not automatically qualify as FAR Part 63, Appendix C, training programs. Unless the FAR Part 121 operator has obtained approval for its training program under FAR Part 63, applicants must qualify under the provisions of FAR § 63.37(b)(1) through (6).

B. Other Applicants.

(1) An applicant who is qualifying for the certificate under the provisions of FAR § 63.37(b), subparagraphs (1) through (4), is required to have acquired a minimum of 5 hours of flight training in the type of airplane to be used in the flight test.

FYI: An applicant meeting the experience requirements of FAR § 63.37, subparagraphs (1) through (4), must have acquired 5 hours of flight training in an airplane, even though the normal procedures segment of the flight test is to be conducted in a SIM under the Air

Transport Association of America (ATA) exemption.

(2) An applicant who is qualifying for the certificate under the provisions of FAR § 63.37(b), subparagraphs (5) or (6), is not required to complete flight training before the flight test.

FYI: FAR § 121.432 does not allow training to be conducted during revenue service.

231. TIME LIMITS FOR THE TESTING PROCESS. The flight test must be completed within 60 days of the oral test. If the flight test is accomplished with a combination of SIM and airplane segments, the airplane segment must be completed within 30 days of the completion of the SIM segment. If the oral test and SIM tests have been completed and the airplane segment of the test is delayed, the oral may be repeated (out of sequence) to avoid exceeding the 60-day limit to complete all test requirements.

232. RETESTING APPLICANTS WITH PASSING SCORES. An applicant who holds an airman test report with a passing score may take another knowledge test for that same class rating 30 days after the last test was taken but not before. Eligibility to retake the test is established by presenting the test administrator with the last airman test report. The test administrator will retain these test results. The score of the last test taken is the official score.

233. ENDORSEMENT OF FLIGHT ENGINEER APPLICANTS RETESTING WITHIN 30 DAYS OF FAILURE.

A. FAR § 63.41 states that an applicant for an FE certificate who fails a knowledge or practical test for that certificate may apply for retesting after 30 days after the date the applicant failed that test; or after the applicant "has received additional practice or instruction (flight, synthetic trainer, or ground training, or any combination thereof) that is necessary, in the opinion of the Administrator or the applicant's instructor (if the Administrator has authorized him to determine the additional instruction necessary) to prepare the applicant for retesting." FAR § 63.41 does not address who may endorse an FE applicant's AC Form 8080-2 or FAA Form 8400-3 for the purpose of providing a statement attesting that the applicant has received instruction in the subjects failed, and is competent to pass the test. This paragraph provides guidance to help clarify the ambiguity concerning the endorser and the method of endorsement.

B. Endorser Eligibility. The following lists contain those persons, other than aviation safety inspectors (ASI), eligible to provide the appropriate endorsement for an FE applicant to retake either the knowledge test or practical test within 30 days of failure.

(1) Knowledge Test:

- A certificated FE with an appropriate class rating
- A U.S. Armed Forces FE instructor or standardization/evaluation FE for that airplane class
- An instructor employed by a training facility approved under FAR § 63.43.

(2) Practical Test:

- A certificated FE with an appropriate type rating who is current and qualified in accordance with FAR §§ 91.529(b), 121.453(a) or 125.265(b)
- A U.S. Armed Forces FE instructor or standardization/evaluation FE who is current and qualified in the appropriate airplane type

C. Verification of Endorser's Eligibility. Before retaking the knowledge or practical test, the FE applicant must present verification of the endorser's eligibility. When the endorser is a U.S. Armed Forces FE instructor or standardization/evaluation FE for a specific airplane class or type, the endorser must provide the applicant (for either FAA Form 8400-3 or AC Form 8080-2) with copies of flight logs, military qualification forms, or a statement from the military supervisor, documenting the endorser's eligibility. The applicant must present this documentation before retaking the knowledge test; however, this documentation does not have to be attached to the form. If the endorser is an instructor employed by a training facility approved under FAR § 63.43, that endorser must provide the applicant with a statement from the approved training facility. The statement must contain certification of the endorser's position as an instructor at that training facility. The applicant must present this statement of the endorser's position before retaking the practical test; however, the statement does not have to be attached to the form.

D. Endorser Completion of Statement on the Airman Test Report and FAA Form 8400-3. The applicant's endorser must fill out either the applicant's AC Form 8080-2 (for the knowledge test) or FAA Form 8400-3 (for the practical test) as follows:

(1) Completion of Statement on Airman Test Report.

(a) An FAA-certificated FE shall complete the statement on the test report by entering his or her

CHAPTER 11. OPERATOR RECORDKEEPING

SECTION 3. CURRENCY PERIODS FOR RECORDS

1807. GENERAL. Principal operations inspectors (POI) shall determine if an operator's recordkeeping system provides the necessary documentation to demonstrate compliance with the Federal Aviation Regulations (FAR). Adequate historical data must be maintained by the operator to enable the POI to determine compliance at any time. This section contains information and guidance to be used by POI's when determining the necessary currency periods for records.

1809. CATEGORIES OF RECORDS. In order to demonstrate regulatory compliance, training and qualification records must be retained to document currency and prerequisite qualification.

A. Permanent Records. Permanent records are the documentation of the successful completion of training or qualification events that are prerequisites for subsequent assignments. These records must be retained for the duration of the individual's employment with that operator to substantiate the individual's qualifications. Examples of permanent records include the following:

- Basic indoctrination records
- Initial qualification records
- Transition and upgrade aircraft training records
- Required operating experience (OE) observation of by FAA inspector records

B. Currency Records. Currency records are the documentation of training or qualification events that qualify individuals for their present assignments and are required to be reaccomplished at scheduled intervals. In order to show continuity of qualification, this type of record must be retained until superseded by a record of similar training or qualification.

NOTE: Many operators revise FAR § 21.409 line-oriented flight training (LOFT) scenarios annually in order to preclude any crewmember from receiving the same scenario more than once. An operator that revises LOFT scenarios less frequently should be required to maintain additional records to ensure that the crewmember does not receive the same scenario in two consecutive training cycles.

C. Records of Action. Regulations require that an operator record each action taken concerning the release from employment or physical or professional disqualification of any flight crewmember or aircraft dispatcher and keep the record for at least 6 calendar months.

NOTE: For FAR Part 121 operators, permanent records, including records of action, may be discarded 6 months after release, termination, or disqualification from employment. For FAR Part 135 operators, these records may be discarded after 12 months.

D. Additional Records. The operator may need to keep additional records as a condition of special operational authorizations. For example, a record of successful operation is required before the Federal Aviation Administration (FAA) can grant approval to increase the extended-range operations with two-engine airplanes (ETOPS) en route alternate time requirements from 90 to 120 minutes. Operators may be required to keep additional training and qualification data in order to justify changes in the authorization of such areas as ETOPS, training hour reductions, and operations specifications. POI's should encourage operators to establish additional recordkeeping for analysis purposes. Operators may depersonalize those records not required by the FAR.

NOTE: Operators that have been granted exemption to the FAR may be required by the terms of those exemptions to retain additional records for a specified period.

1811. CURRENCY PERIODS FOR RECORDKEEPING SYSTEMS. When evaluating any recordkeeping system, POI's shall ensure that the system has the capability for entry, storage, retrieval, and archiving of all required records in the categories of records for which the operator is seeking acceptance or approval (see job aids 3.11.3.1. and 3.11.3.2. for currency periods and regulatory references).

1813. RECOMMENDED ADVANCED QUALIFICATION PROGRAM (AQP) CURRENCY PERIODS. The AQP recordkeeping requirements are similar to those discussed in paragraphs 1809 and 1811; however, some differences do exist. POI's should read the sections on AQP in volume 3, chapter 4, and see Advisory Circular (AC) 120-54, "Advanced Qualification Program," chapter 9, section 5, for detailed guidance.

NOTE: Job Aid 3.11.3.1. is not intended for use with AQP.

1814.–1826. RESERVED.

JOB AID 3.11.3.1.
CREWMEMBER TRAINING AND QUALIFICATION RECORDS PARTS 121 AND 135

Type of Record	Airman Position	Relevant FAR	Currency Period
Proficiency Check	Pilot-In-Command (PIC)	121.441 and 135.63	8 months; 14 months if qualified in two aircraft; 20 months if alternating recurrent LOFT with proficiency checks and recurrent training
	Second-In-Command (SIC)		14 months
	Flight Engineer (FE)		14 months
Recurrent Flight Training	PIC	121.427 and 135.63	8 months; 14 months if qualified in two aircraft; 20 months if alternating recurrent LOFT with proficiency checks and recurrent training
	SIC		14 months
	FE		14 months
Flight Attendant (F/A) Competency Check/Test	F/A	121.421 (initial)	permanent
		121.427	14 months
		135.351 (recurrent quiz/review)	14 months

CHAPTER 12. ENVIRONMENTAL CONSIDERATIONS AND RESPONSIBILITIES

SECTION 2. AIRCRAFT NOISE

1861. PERTINENT REGULATIONS AND ORDERS.

A. As a result of § 44715 of Title 49, United States Code (U.S.C.) (formerly § 611 of the Federal Aviation Act (FA Act) of 1958), the Federal Aviation Administration (FAA) adopted Federal Aviation Regulations (FAR) Part 36, which establishes noise standards for issuance of aircraft type certificates, changes to those certificates, and to standard airworthiness certificates. To complement FAR Part 36, the FAA issued FAR Part 91, Subpart I, requiring civil, subsonic turbojet aircraft over 75,000 pounds, which do not meet the FAR Part 36 noise standards, to be modified by January 1, 1985, if these aircraft are to operate at United States (U.S.) airports.

B. Special Federal Aviation Regulation (SFAR) 47, effective February 26, 1985, provides for limited issuance of special flight authorizations to conduct certain nonrevenue operations that are otherwise prohibited by the noise restrictions in FAR Part 91, Subpart I. Permissible operations include flights to an airport for alterations to achieve noise compliance, for exportation of the aircraft, and for scrapping the airplane. These special flight authorizations are issued by the Office of Environment and Energy (AEE-1).

C. FAA Order 1050.13, "Replacement, Apportionment, and Compliance Plans Submitted Under Subpart E of FAR Part 91," (this order predates Subpart I) establishes procedures and assigns responsibilities for aircraft noise compliance plans submitted by U.S. operators under Subpart I of FAR Part 91.

1863. FLIGHT STANDARDS RESPONSIBILITIES. As of January 1, 1985, all civil turbojet aircraft with maximum weights of more than 75,000 pounds that are U.S. registered and have standard airworthiness certificates (or equivalent aircraft that are foreign registered) operating into U.S. airports, must have been shown to comply with Stage 2 or Stage 3 noise levels as specified in Appendix C of FAR Part 36. The showing of compliance, for aircraft issued original standard airworthiness certificates after the appropriate dates specified in FAR § 36.1, is accomplished during the aircraft certification process. Operators of these aircraft automatically comply with FAR Part 91, Subpart I, aircraft noise requirements and no specific flight standards responsibilities are defined. Operators of aircraft issued original standard airworthiness certificates before the appropriate dates specified in FAR § 36.1 were required by FAR Part 91, Subpart I, to make a specific showing of compliance or submit a compliance plan and status reports to AEE-1. Alternatively, the operator may apply for an exemption from that office. Questions concerning a specific aircraft type or a specific operator's compliance status with FAR Part 91, Subpart I, should be directed to AEE-110. In addition, AEE-110 will provide copies of compliance plans, status reports, and any exemptions upon request. With respect to aircraft noise and FAR Part 91, Subpart I, requirements, Flight Standards inspectors are responsible for the following:

A. For any flight operation suspected of being in violation of FAR Part 91, Subpart I, inspectors must initiate an investigation and prepare an Enforcement Investigation Report (EIR), if appropriate (see FAA Order 2150.3A, "Compliance and Enforcement Program"). Upon initiation of an investigation, AEE-1 and the Regional Flight Standards Division (RFSD) shall be notified. Assistance may be requested from these offices if considered necessary.

B. When known, the RFSD will be notified of any operator who has failed to submit the compliance plans and status reports required by FAR § 91.813. The Flight Standards division will also be notified when it is suspected that an operator has failed to comply with its submitted compliance plan. The Flight Standards division will, in turn, notify AEE-1 and regional counsel. Flight Standards field inspectors will take action only when directed by the RFSD in coordination with both the regional counsel and AEE-1.

C. Inspectors shall surveil assigned FAR Part 121, 125, and 135 certificate holders (including FAR Part 125 deviation holders) who operate Stage 1 aircraft under FAR § 91.801 to determine the following:

- That an appropriate exemption (either under FAR Part 11 or FAR § 91.811) is aboard each aircraft

- That the operator continues to provide AEE-1 with current compliance plan status reports as required by FAR § 91.813 (FAA Order 1050.13 provides additional information on required compliance plans and status reports.)
- That the operator is complying with all exemption restrictions, such as night curfews

D. District offices having responsibility for FAR Part 129 operators should conduct liaison and/or surveillance as necessary to determine compliance with the FAR Part 91 noise limits (the operator is using only aircraft that are compliant or exempted). Suspected violations must be investigated, and an EIR must be prepared, if appropriate.

E. Inspectors shall surveil flight operations conducted under SFAR 47 to determine the following:

- That a special flight authorization is on board the airplane during all operations at U.S. airports
- That the operator is complying with all conditions and limitations established by the authorization
- That the airplane has an appropriate airworthiness certificate or ferry permit to perform the flight

1865. HEAVY AIRPLANE OPERATORS' COMPLIANCE WITH APPROVED NOISE ABATEMENT DEPARTURE PROFILES (NADP).

A. Background. To resolve a continuing problem of nonstandard NADP's, the FAA published an advisory circular (AC) that contains the minimum performance criteria for noise abatement vertical departure profiles where configuration (thrust and/or flap) changes are required below 1,500 feet above ground level (AGL) for noise. These minimum criteria were formalized in AC 91-53, "Noise Abatement Departure Profiles," dated July 22, 1993. This AC establishes minimum acceptable criteria for speed, thrust settings, airplane configurations, and the criteria for both the "Close-In" (for close-to-the-airport communities) and "Distant" (for distant airport communities) NADP's. These NADP's can be combined with preferential runway selection and flight path techniques to minimize the community noise impact.

B. Principal Operations Inspector (POI) Responsibilities.

(1) Familiarization with AC 91-53. POI's should become familiar with the material in AC 91-53 before approving an assigned certificate holder's NADP manual procedures. The certificate holder shall not use or be approved for any other departure profile (except as stated in FAR Part 91) that is not defined within the AC. FAR Part 91 departure procedures require an airplane to "climb to an altitude of 1,500 feet above the surface as rapidly as practicable," and are not required to conform to AC 91-53.

(2) Vertical Departure Profiles. POI's must ensure that all airplane vertical departure profiles (profiles with configuration changes below 1,500 feet) described in the certificate holder's operations and/or training manuals comply with the minimum criteria established in AC 91-53 for NADP's (Close-In and Distant). AC 91-53 offers the operator one means of complying with the noise abatement departure procedure, but not the only means. If the operator chooses a procedure that differs from the criteria in the AC, then the proposed procedure must be addressed by the certificate holder to the certificate holder's POI for concurrence by AFS-400 of the Flight Standards Service.

(3) Operations Specifications. POI's should review operations specifications nonstandard paragraph C68 before approving the certificate holder's operations specifications. Volume 3, chapter 1, section 5, paragraph 196, contains instructions for issuance of paragraph C68 for approval of the NADP's.

NOTE: POI's must review the certificate holder's operations and training manuals that describe the certificate holder's departure profiles for compliance with the minimum criteria as stated in the revised operations specifications paragraph C68.

1867. AIRTOUR AND SIGHTSEEING OPERATIONS.

A. Background. Aviation accidents within and around the Grand Canyon and other prominent tourist attractions have heightened public interest in safety of sightseeing and airtour operations. Also, patrons of the Grand Canyon and other national parks have expressed concern to their congressional representatives about the noise generated by overflying aircraft. Environmental lobby organizations have also expressed their concerns for potential environmental damage and harm to the natural inhabitants of these areas. Overuse of these natural preserves will impede their preservation for future generations.

B. Grand Canyon National Park and the State of Hawaii.

(1) Congressional concerns over air safety and aircraft noise resulted in the enactment of Public Law 100-91 on August 18, 1987. This law required a study of aircraft noise effect at a number of national parks.

The law also imposed flight restrictions at the following three parks: Grand Canyon National Park in Arizona, Yosemite National Park in California, and Haleakala National Park in Hawaii.

(2) Presently, the Grand Canyon National Park and the state of Hawaii are the only areas with special operating rules governing aircraft overflights and requirements for operators conducting sightseeing flights under FAR Part 135.

NOTE: SFAR 71 prescribes special operating rules for airplane and helicopter visual flight rules (VFR) airtour operations conducted in the state of Hawaii under FAR Parts 91 and 135. This rule does not apply to flights conducted in gliders or hot air balloons. Future revisions to this handbook will contain additional guidance concerning special operating rules for airtour operations in the state of Hawaii.

C. Identification of Other Scenic Areas. The appropriate FAA regional offices and Flight Standards District Offices (FSDO) are responsible for the acknowledgment and identification of scenic areas attracting airtours and sightseeing operations in each FAA region. These offices should encourage meetings of joint users in order to develop acceptable flight programs. The FAA Regional Environmental Office and Air Traffic Control Service (ATC) should be included in meetings for planning special-use airspaces. POI's should encourage all assigned operators, including non-certificated commercial sightseeing and FAR Part 135 operators, to cooperate in complying with procedures established for each scenic flight area. FSDO's should extensively distribute information regarding special routes to prevent conflicts among airspace users. The following procedures apply to POI's who are working with FAR Part 135 operators conducting airtour operations and with other operators conducting sightseeing operations in other areas under FAR Parts 91 and 135:

- Identifying scenic areas subject to airtour/sightseeing operations
- Identifying actual and potential airtour/sightseeing operators
- Coordinating with ATC, when appropriate, and with airspace users in cooperatively establishing recommended routes, entry/exit points, altitudes, direction of flight, and reporting points
- Encouraging the participation of non-certificated sightseeing operators

NOTE: An environmental impact study (EIS) may be required for any routes developed below 3,000 feet AGL.

D. Operations Specifications.

(1) Airtours and sightseeing flights conducted within the Grand Canyon National Park Special Flight Rules Area require FAR Part 135 operators to hold a special operations specifications authorization. Inspectors with operators aspiring to conduct operations within the Grand Canyon National Park Special Flight Rules Area should coordinate with the Western-Pacific regional office.

(2) Special regulations, which may be developed in the future for another area, park, or prominent attraction, should be identified, and any special operational authority should be listed as a note in paragraph B of the operations specifications. The suggested wording for such an entry follows:

Special Requirements: Note 1.
Airtour/sightseeing operations are authorized to be conducted over *[list appropriate area, river, or prominent point of interest]* in accordance with procedures outlined within the operator's operations manual.

(3) The routes and altitudes depicted in the operator's operations specifications should enhance collision avoidance procedures and aircraft noise abatement. The identification of sightseeing areas and routes does not relieve the pilot-in-command (PIC) from the responsibility to see and avoid other aircraft.

E. Operations Manual.

(1) The POI must coordinate with the Las Vegas FSDO through the Western-Pacific regional office in order to grant approval for an operator to conduct sightseeing and/or airtours in the Grand Canyon. Special programs developed through the Las Vegas FSDO require the operator to hold operations specifications that grant flight authority in Special Flight Rule airspace.

(2) For attractions and areas other than the Grand Canyon, POI's should recommend that operators have a chapter in their operations manual containing an outline of procedures for crewmembers conducting airtour/sightseeing operations. This chapter should contain the following:

(a) The airtour/sightseeing area should be clearly depicted on a chart and explained in words to ensure the reader's comprehension of the tour area.

(b) All tour area entry/exit points should be points for radio reports on a common-use air-to-air frequency.

(c) There should be a clear description of tour routes, altitudes, and reporting points.

(d) It should include procedures for obtaining current weather information and weather deviations. (The operator should consider higher VFR weather minimums for flight operations in high density traffic where airtour/sightseeing operators enter and depart special airspace.)

(e) Any collateral duties should be listed, such as the pilot narrating a tour or operating tape players for passengers. (These shall only be performed when the pilot's workload permits; compliance with FAR § 135.100(b) is still required.)

(f) There should be provision for additional crewmember training, if necessary. Ground and flight training may be required for each additional airtour/sightseeing operation.

1868. RESERVED

[PAGES 3-993 THROUGH 3-998 RESERVED]

CHAPTER 14. FLIGHT ATTENDANT TRAINING AND QUALIFICATION PROGRAMS

SECTION 4. FLIGHT ATTENDANT GENERAL EMERGENCY TRAINING CURRICULUM SEGMENT

1973. GENERAL. This section provides direction and guidance on the content, evaluation, and approval of the flight attendant (F/A) general emergency training curriculum segments. For direction and guidance on aircraft-specific emergency training, see volume 3, chapter 14, section 5, "Flight Attendant Ground Training."

A. Emergency training requirements are specified by Federal Aviation Regulations (FAR) § 121.417 and by FAR § 135.331. These FAR may be divided into two types of training, which will be referred to in this handbook as "general" emergency training and "aircraft-specific" emergency training. General emergency training is training on those emergency items that are common to all aircraft. An example of general emergency training is training on fire extinguishers and firefighting procedures—which would be applicable to all aircraft in the operator's fleet. Aircraft-specific emergency training is training on those items that are specific to each aircraft. An example of aircraft-specific emergency training is instruction on the location of emergency equipment and crewmember emergency assignments for a DC-9-30 aircraft.

B. The objective of general emergency training is to provide F/A's with the necessary knowledge concerning emergency equipment, situations, and procedures to ensure implementation of the correct actions in the event of an emergency.

C. When a certificate holder operates a number of different aircraft, it is to the certificate holder's advantage to obtain Federal Aviation Administration (FAA) approval for training curriculums that have distinct general emergency training and aircraft-specific emergency training segments. A certificate holder may, however, design a training curriculum that does not make a distinction between general emergency training and aircraft-specific training, such as when a certificate holder operates only one make and model of aircraft.

(1) General emergency training is required in the initial new-hire, recurrent, and requalification categories of training, but not in transition training. Only aircraft-specific emergency training is required in the transition category of training. A certificate holder may choose to limit initial new-hire training to a specific make and model of aircraft and then conduct transition training to qualify F/A's in each additional aircraft. When the F/A completes initial new-hire training, a training/checking month is established and general emergency training is not required again until the next recurrent training cycle.

(2) A certificate holder may choose to train its F/A's in all makes and models of aircraft in the operator's fleet during initial new-hire training. In this case, a general emergency training curriculum segment provides the basis for all aircraft-specific training to follow. If a general emergency training curriculum segment is not defined, the operator must duplicate this training on each specific aircraft type.

D. Wet Ditching Training and Drills.

(1) Water impact accidents, while they rarely occur, severely test the emergency procedure skills of all flight crewmembers. The chances of human survival from these types of accidents have been increased by advances in cabin design and better passenger safety awareness. However, improved aircrew emergency training is the major factor contributing to human survival.

(2) Principal operations inspectors (POI) should encourage their assigned air carriers to provide realistic environments for wet ditching training and drills. Training objectives should be accomplished in swimming pools or other safe aquatic environments using the flotation devices required to be on board the aircraft.

(3) Emergency equipment and drill training should be fully integrated into the operator's situational awareness training modules. POI's should ensure that inadvertent water impact accidents (ditch-

ing), such as those occurring with little or no warning, are emphasized during wet ditching training.

1975. GENERAL EMERGENCY TRAINING SUBJECT AREAS. In the F/A general emergency training curriculum segment there are three distinct subject areas of training that are required in the conduct of general emergency training. These three subject areas, which need to be covered in the curriculum segment modules, are as follows: "emergency equipment" training, "emergency situation" training, and "emergency drill" training. Emergency equipment training consists of individual instruction, demonstration, and practice in the functions and operation of emergency equipment, such as fire extinguishers and oxygen bottles. Emergency situation training consists of instruction in the factors involved and the procedures to be followed when emergency situations occur, such as training on ground evacuations and in-flight medical emergencies. Emergency drill training provides an opportunity for F/A's to perform emergency procedures with hands-on practice in the actual operation of emergency equipment, such as a firefighting drill with the use of a fire extinguisher and protective breathing equipment (PBE).

NOTE: While emergency drills are always designated under the general emergency training curriculum segment, these drills can be taught as either general to all aircraft or as aircraft-specific. In addition, the training modules for general emergency training must cover the necessary training for the type of operation performed by the operator. For example, when an operator conducts extended-overwater operations, the training modules must include training on the use of sliderafts or liferafts.

A. Emergency Equipment Training. FAR § 121.417(b)(2) requires training on certain equipment. In addition to the required equipment, training should be conducted on any additional emergency equipment located on the operator's aircraft such as demo equipment, cardiopulmonary resuscitation (CPR) equipment, cockpit key, seatbelt extensions, and lavatory smoke detectors. Inspectors shall ensure that training modules cover the function and operation of at least the following emergency equipment:

- Equipment used in ditching and evacuation
- First aid equipment (including its proper use)
- Portable fire extinguishers (with emphasis on type of fire extinguisher to be used for different classes of fires)
- Emergency exits in the emergency mode with the evacuation slide/raft pack attached, if applicable (with training emphasis on the operation of the exits under adverse conditions)

B. Emergency Situation Training.

(1) The second subject area, emergency situation training, must, according to FAR § 121.417(b)(1),(3), and (4); and FAR § 121.417(e), include training modules that cover emergency procedures and coordination among crewmembers in at least the following emergency situations:

- Rapid decompression
- Fire in flight or on the surface, and smoke control procedures (with emphasis on electrical equipment and related circuit breakers found in cabin areas including all galleys, service centers, lifts, lavatories and movie screens)
- Ditching and other evacuations (including the evacuation of persons and their attendants, if any, who may need the assistance of another person to move expeditiously to an exit in the event of an emergency)
- Illness, injury, or other abnormal situations involving passengers or crewmembers (to include familiarization with the emergency medical kit)
- Hijacking and other unusual situations
- Review and discussion of previous aircraft accidents or incidents pertaining to actual emergency situations
- For crewmembers who serve in operations above 25,000 feet, instruction in respiration, hypoxia, duration of consciousness without supplemental oxygen at altitude, gas expansion, gas bubble formation, physical phenomena and incidents of decompression

(2) Emergency situation training modules may also include information on any additional unusual situations that could result in an emergency situation, such as passengers who may jeopardize aircraft or passenger safety, turbulence, blown tires, and engine/auxiliary power unit (APU) torching.

C. Emergency Drill Training.

(1) The third subject area, emergency drill training, must, according to FAR § 121.417(c)(1)(2), include training modules that ensure crewmember accomplishment of these emergency drill requirements, as follows:

(a) The following one-time emergency drills must be performed by each crewmember during initial

training: the PBE/firefighting drill and the emergency evacuation drill.

(b) The following additional emergency drills must be accomplished during initial training and once every 24 calendar months during recurrent training—with each crewmember *performing* the following drills while operating the appropriate equipment: the emergency exit drill, hand fire extinguisher drill, emergency oxygen system drill, flotation device drill, and the ditching drill (if applicable).

(c) The following additional emergency drills must be accomplished during initial training and once every 24 calendar months during recurrent training—with each crewmember *observing* the following drills: liferaft removal and inflation drill; slideraft transfer drill; slide or slideraft deployment, inflation, and detachment drill; emergency evacuation slide drill.

(2) Emergency drill training modules may also include any additional drills deemed necessary by the operator, such as a CPR equipment drill or a megaphone drill.

NOTE: For the required differences in FAR Part 135 for each of the three training subject areas, see FAR § 135.331, "Crewmember Emergency Training."

D. One element of effective emergency training is to simulate realistic emergency situations by having participants actively involved in situational problem-solving activities. These types of activities provide students with the opportunity to practice emergency procedures in a controlled environment until proficiency is obtained. An example of a simulation for "emergency situation" training is one in which some F/A's prepare a "cabin" (classroom, mockup, or actual aircraft) for a land evacuation, while others assume the roles of crewmembers and passengers. An example of a situation for emergency drill training is one in which F/A's perform after-impact commands and actions while opening an emergency exit (in the emergency mode) and directing the evacuation of passengers.

1977. CONTENT OF F/A GENERAL EMERGENCY TRAINING CURRICULUM SEGMENT OUTLINE. A general emergency training curriculum segment outline must include appropriate modules of emergency equipment training, emergency situation training, and emergency drill training. The modules, elements, and events listed on the outline only have to contain enough detail to ensure that the FAR-required training is provided.

A. FAR § 121.417(b) and FAR § 135.331(b) specify that crewmembers must receive instruction in the function and operation of emergency "equipment" and the handling of emergency "situations." Emergency equipment training and emergency situation training are distinguished for the use of the building block approach to reinforce basic concepts. For example, emergency equipment training for the Halon fire extinguisher should provide training on the extinguisher's function and operation. Emergency situation training, however, should provide training on appropriate actions and commands to use when operating the Halon fire extinguisher in a particular firefighting situation.

B. FAR § 121.417(c) and FAR § 135.331(c) specify the emergency "drills" that crewmembers must perform and the equipment that must be operated during emergency training.

1979. GENERAL EMERGENCY TRAINING MODULES. A general emergency training curriculum segment must include as many training modules as necessary to ensure adequate training. Each training module outline must provide at least a descriptive title of the training module and a list of the related elements or events that are to be presented during instruction on the module.

A. The general emergency training module outline must contain sufficient elements or events to ensure that students will receive adequate training in the emergency equipment, emergency situation, and emergency drill subject areas. Operators do not have to include detailed descriptions of each element or event within a training module outline. Detailed descriptions are more appropriate when included in the operator's courseware. During the approval process, the POI should review courseware as necessary to ensure that the scope and depth of the training modules are adequate.

B. The training modules designated to fulfill the requirements of FAR § 121.417 are contained in both the general emergency training curriculum segment and the aircraft ground training curriculum segment. Operators have flexibility in the arrangement of general emergency training modules as follows:

(1) The training modules required by the FAR for general emergency training must be included in the general emergency training curriculum segment outline and counted toward the hour requirement for this curriculum segment. The sequence of the actual training can be determined by the operator. For example, while a module on decompression must be contained in the general training curriculum segment outline, the operator may actually conduct training on decompression procedures immediately before or after conducting training on a related aircraft-specific train-

ing module designated in the aircraft ground training curriculum segment.

(2) An operator may choose to put a training module in more than one curriculum segment. For approval purposes, however, that training module must be placed in the curriculum segment designated in this handbook. For example, FAR § 121.417 requires that a first aid training module be placed in the general emergency training curriculum segment. At the operator's discretion, however, the first aid training module could also be covered in the basic indoctrination curriculum segment.

C. The following is an example of one of the many acceptable methods of presenting a general emergency training module outline:

5. FIREFIGHTING EQUIPMENT

(a) Preflight: Inspection tags, dates, seals, proper charge levels, security of mounting, accessibility

(b) Individual Extinguishers: Removal, function, operation and operating techniques, cautions

(c) Classes of Fires: Appropriate extinguishers, specific firefighting techniques

(d) Protective Breathing Equipment, Smoke Goggles: Donning, use

(e) Lavatory Equipment: Integrity of trash container spring-loaded doors, smoke alarms, fire extinguishers, placards

Elements Within a Training Module

FYI: In the preceding example, the number and location of each type of fire extinguisher and its location on each aircraft are not included. These elements are included in the aircraft-specific emergency training module found in the F/A aircraft ground training curriculum segment (see section 5 of this chapter).

D. The following example illustrates the interrelationship between training modules in the F/A general emergency training curriculum segment:

FLIGHT ATTENDANT GENERAL EMERGENCY TRAINING CURRICULUM SEGMENT — *Title of Curriculum Segment*

A. Training Objective: That students will be able to recognize and evaluate an emergency situation and to properly implement and use the appropriate emergency procedures and equipment — *Statement of Training Objectives*

B. Emergency Situation Training: — *Title of Subject Area*

1. Basic Principles
2. Decompression
3. Fires
4. Ditching
5. Ground Evacuation
6. Unwarranted Evacuation
7. Illness or Injury
8. Abnormal Situations Involving Passengers or Crewmembers
9. Hijacking/Bomb Threat
10. Turbulence
11. Other Unusual Situations
12. Previous Aircraft Accidents and Incidents

— *Training Modules Within a Curriculum Segment*

3. Fires

(a) Principles of Combustion and Classes of Fires
(b) Fire Prevention
(c) Basic Firefighting Procedures
(d) Extinguishing Cabin Fires
(e) External Fires on Ground
(f) Electrical Equipment and Circuit Breakers

— *Elements Within a Training Module*

1981. EMERGENCY EQUIPMENT TRAINING MODULES. Emergency equipment training modules consist of instruction in the function and operation of that emergency equipment common to all aircraft that the student is qualifying for in the operator's fleet. Emergency equipment training must provide for the demonstration of emergency equipment that duplicates the specifications of the emergency equipment on the actual aircraft. For example, if the operator's fleet of aircraft is equipped with both portable oxygen bottles and chemical oxygen generators, then both types of oxygen devices must be used during the course of instruction. Any pertinent information related to the function of a piece of emergency equipment should also be addressed during the emergency equipment training. For example, the different types of fires must be addressed before adequate training can be given on the selection of appropriate fire extinguishers. Specifically, a training element for water fire extinguishers must emphasize that water extinguishers can only be used on Class A fires (ordinary combustibles).

FYI: Instruction on the operation and location of pieces of emergency equipment specific to each aircraft type is addressed in the aircraft-specific emergency training module found in the F/A aircraft ground training curriculum segment (see section 5 of this chapter).

A. Training Criteria. Emergency equipment training should be developed to ensure that F/A's meet the following knowledge and ability criteria:

- Use of proper preflight techniques (when part of F/A duties)
- Procedures to be used if equipment fails to meet preflight requirements

- Methods to be used for removing equipment from securing devices
- Methods to be used for properly securing equipment
- Operation of equipment, including awareness of operational limitations
- Functions of equipment, including operation under adverse conditions

NOTE: Passengers, at times, have consciously or inadvertently moved door operating mechanisms, even when the mechanisms are located under protective plastic covers. POI's should ensure that their assigned operators inform crewmembers of the potential problem of and the need to be alert to the possibility of passengers moving an exit mechanism, and have procedures for crewmembers on unpressurized aircraft to check the position of the door handles periodically during flight.

B. Training Module Content. The following are examples of training modules for the emergency equipment subject area. These examples of training modules encompass different types of operations and may not be applicable to an operator's specific type of operation. It should be noted that there are elements and events contained in these training modules that are not specified in the FAR, but that are intended to provide POI's with further examples of material that may be included in training modules. These are examples only, and it is not intended that these examples indicate the only acceptable methods, sequence of instructional delivery, subject titles, or amount of detail.

(1) Ditching Equipment.

- Preflight: Inspection tags; dates; pressures; accessibility; integrity of casings
- Life Preservers: Removal; function; donning; inflation; activation and deactivation of locator light; donning an adult vest on a small child or infant; special use for children, nonswimmers, handicapped, elderly; swimming techniques
- Flotation Seat Cushions: Removal; function; donning; swimming techniques
- Liferafts: Removal and handling; positioning; lanyard attachment; launching, including under adverse conditions; inflation; detachment from aircraft; boarding techniques
- Sliderafts: Deployment; inflation; detachment from aircraft; move from door to door; boarding techniques
- Slides: Deployment; inflation; detachment from aircraft for use as a flotation device; boarding techniques
- Raft Survival Equipment (Including Canopy and Survival Kit): Function; use
- Megaphones, Flashlights, Emergency Lights, Emergency Locator Transmitters, First Aid Kits: Removal; function; use; operation during a ditching

(2) Ground Evacuation Equipment.

- Preflight: Inspection tags; seals; dates; operable/pressures; security; accessibility
- Window Exit Escape Ropes: Removal; function; use during ditching or ground evacuation
- Slides or Sliderafts: Deployment; inflation; sliding techniques; use under adverse conditions
- Megaphones, Flashlights, Emergency Lights, Emergency Locator Transmitters: Removal; function; use; operation during ground evacuation

NOTE: The National Transportation Safety Board (NTSB) has indicated, in Safety Recommendation A-90-57, that there may be a need for a megaphone to be located in the upper deck passenger compartment of those B-747's in which passengers are permitted to be carried in the upper deck passenger compartment. FAR § 121.309(f)(2) requires two megaphones to be located in the passenger cabin on each airplane having a seating capacity of more than 99 passengers. One megaphone is to be located at the forward end of the passenger cabin and the other at the most rearward location where it would be readily accessible from a normal F/A seat. While there is no requirement for a megaphone to be located in the upper deck passenger compartment of a passenger-carrying B-747 for use in an emergency situation, the FAA believes it would be prudent for operators to install one. POI's shall encourage those certificate holders to install a megaphone in a location on the upper deck that would be readily accessible to an F/A to use during an emergency evacuation.

(3) First Aid Equipment.

- *Preflight:* Inspection tags; dates; integrity of casing; accessibility
- *Emergency Medical Kit:* Removal; contents; use, including reporting requirements
- *First Aid Kit:* Removal; contents; use

(4) Portable Oxygen Systems (Oxygen Bottles, Chemical Oxygen Generators, PBE).

- *Preflight:* Inspection tags; dates; seals; pressures; integrity of tubing and masks, casings, or smokehoods; security; accessibility
- *Portable Oxygen Devices/Masks (Oxygen Bottles and Chemical Oxygen Generators):* Removal and handling; function; operation including donning, activation, and cautions; procedure for administering oxygen to self, to passengers, and to persons with special oxygen needs; methods of securing an oxygen device while administering oxygen
- *PBE:* Removal; function; limitations; operation, including donning, activation, and cautions; use with fire extinguisher in a firefighting situation, including methods of maneuvering in limited space with reduced visibility; utilization of communications system
- *Passenger-Supplied Oxygen:* Function; operation; requirements for carriage

(5) Firefighting Equipment.

- *Preflight:* Inspection tags; dates; seals; proper charge levels; properly serviced; security of mounting; accessibility
- *Individual Extinguishers:* Removal; function; operation and operating techniques; cautions
- *Classes of Fires:* Appropriate extinguishers; specific firefighting techniques
- *PBE, Smoke Goggles:* Donning; use
- *Lavatory Equipment:* Integrity of trash container; spring-loaded doors; smoke alarms; fire extinguishers; placards

(6) Emergency Exits.

- *Exits with Slides or Sliderafts:* Preflight door seals; integrity and condition of girt bar and brackets; slide or sliderafts connections and pressure indicators; slide or sliderafts engaging/disengaging mechanism; markings and placards; door opening controls; signs; lights; assist handles; function; operation, including under adverse conditions; impact of wind, weather, and fire on slides
- *Window Exits:* Preflight window seals, window opening controls, markings, placards, signs, lights, tactile indicators for non-visual conditions; function; operation and positioning, including under adverse conditions

(7) Exits Without Slides: Preflight door seals; door opening controls; markings and placards; signs; lights; assist handles; function; operation, including under adverse conditions

(8) Additional Emergency Equipment.

- *Preflight:* Equipment integrity; equipment accessibility
- *Cockpit Key, Demo Equipment, CPR Equipment, Seatbelt Extensions, Lavatory Smoke Detectors:* Function; use

1983. EMERGENCY SITUATION TRAINING MODULES. Emergency situation training modules consist of instruction, demonstration, and practice in the handling of emergency situations common to all aircraft on which the student is qualifying in the operator's fleet. "Emergency situation" training provides the opportunity for the student to correlate the concepts developed in "emergency equipment" training with the procedural applications of various types of emergency situations that can occur. For example, this training could include instruction on the use of a water extinguisher on a seat cushion fire. To reinforce the development of these procedural concepts, emergency situation training should incorporate situational problem-solving activities that depict in-flight emergencies. These simulations should be as realistic as possible and should reflect the operator's type of operation.

> *FYI: Instruction for specific emergency assignments and procedures for each aircraft are addressed under aircraft-specific emergency training which is included in the F/A aircraft ground training curriculum segment (see section 5 of this chapter).*

A. Training Criteria. Emergency situation training should be developed to ensure that F/A's meet the following knowledge and ability criteria:

- Knowledge of crew coordination, emergency procedures, and emergency equipment
- Knowledge of each crewmember's emergency procedures, signals, and safety-related duties

- Ability to recognize an emergency situation and select appropriate procedures
- Ability to take the initiative and promptly implement the appropriate emergency procedures
- Ability to assume decisive leadership in the event flight crewmembers are incapacitated or unable to participate
- Knowledge of requirements for reporting accidents and incidents

B. Training Module Content. The following are examples of training modules for the emergency situation subject area. These examples of training modules encompass different types of operations and may not be applicable to an operator's specific type of operation. It should be noted that there are elements and events contained in these training modules which are not specified in the FAR but which are intended to provide POI's with further examples of material that may be included in training modules. These are examples only and it is not intended that these examples indicate the only acceptable methods, sequence of instructional delivery, subject titles, or amount of detail.

(1) Basic Principles:

- *General:* Types of emergencies; need for standardization of procedures between crewmembers; crew coordination and communication, including team responsibilities, assertive command and control, response initiation, passenger behavior and management

(2) Decompression:

- *General:* Causes and recognition of cabin pressure loss; physiological effects of reduced atmospheric pressure; time of useful consciousness
- *Rapid Decompression (Immediate Action/ Secondary Action Procedures):* Possible causes; cabin effects; physiological effects; crew coordination procedures; "immediate action procedures," including recognition of signs of decompression, grasping nearest oxygen mask, sitting down or holding onto something solid, waiting for notification from the flight deck before moving around; "secondary action procedures," including obtaining and putting on portable oxygen, checking other F/A's, assisting passengers, treating injuries, damage assessment and control
- *Insidious Decompression:* Possible causes; cabin effects; physiological effects; crew coordination; immediate action procedures
- *Cracked Window/Pressure Seal Leaks:* Cabin effects; crew coordination; immediate action procedures

(3) Fires:

- *Principles of Combustion and Classes of Fires:* Characteristics of an aircraft fire, including flash-over and time element; toxic fumes and chemical irritants; review of function and use of firefighting equipment; firefighting techniques; special factors, including cabin material flammability and toxicity; confined space; cabin ventilation
- *Fire Prevention:* F/A readiness; cabin checks, including stowage of articles which could contribute to fire; lavatory checks, including condition of trash container, spring-loaded door, smoke detectors, and fire extinguishers; galley checks, including ovens and electrical equipment; enforcement of smoking regulations; procedures for use of circuit breakers
- *Basic Firefighting Procedures:* Flight crewmember notification procedures; source identification; firefighting and crew coordination procedures; proper use of PBE; effective use of aircraft communication systems; methods of gaining access to a fire source; smoke control and removal procedures
- *Extinguishing Cabin Fires:* Crew coordination, including team response; procedures for extinguishing cabin fires to include lavatories; galleys/lower-lobe galleys; ovens; volatile fuel vapors; light ballasts; cabin furnishings; stowage bins/hatracks; trash containers; clothing
- *External Fires on Ground:* Crew coordination; role of F/A's for exterior aircraft, APU, jetway, ramp fires
- *Electrical Equipment and Circuit Breakers:* Procedures for circuit breaker use with galleys, service centers, lifts, lavatories, and movie screens

(4) Ditching:

- *Basic Practices:* Description of ditching and unanticipated water landings (prior to impact/after impact); crew notification, including time before touchdown, type of

landing, signal to assume protective brace position; crew coordination, including cabin and passenger preparation; passenger briefings; helper briefing; passenger protective brace positions ; F/A protective brace positions (forward-facing jumpseat—head forward, aft-facing jumpseat—head back); impact on water; assessing conditions; commands; opening primary/secondary exits; use of flotation devices; evacuation at overwing exits including use of escape ropes; redirection techniques; evacuating persons needing assistance; passenger control

- *Prior to Impact—Unanticipated:* F/A readiness; protective brace positions; commanding passengers to assume protective brace positions
- *After Impact—Unanticipated:* Assessing conditions; crew coordination procedures; releasing F/A seatbelts; ensuring activation of emergency lights; commanding passengers to release seatbelts and don individual flotation devices; assessing exits; redirection techniques; opening exits, including deploying flotation devices and commanding helpers to assist; commanding passengers to evacuate at exit, inflate vests, and use flotation devices; assisting incapacitated passengers and crewmembers; removing appropriate emergency equipment from aircraft
- *Prior to Impact—Anticipated:* Crew notification and coordination; passenger briefing and preparation; donning life vests; cabin preparation; helper briefings; assuming protective brace positions; F/A review of ditching duties
- *After Impact—Anticipated:* Assessing conditions; crew coordination procedures; releasing F/A seatbelts; ensuring activation of emergency lights; commanding passengers to release seatbelts; assessing exits; redirection techniques; opening exits, including deploying sliderafts or launching rafts, commanding helpers to assist;commanding passengers to evacuate at exit, inflate life vests, and board sliderafts or rafts; assisting incapacitated passengers and crewmembers; removing appropriate emergency equipment from aircraft
- *Evacuation Techniques:* Aircraft flotation characteristics; adverse conditions; assisting handicapped; directing passenger flow; boarding rafts
- *Survival at Sea:* Raft management; basic survival procedures in a raft environment; signalling

(5) *Ground Evacuation:*

- *Basic Practices:* Description of unanticipated and anticipated evacuations (prior to impact/after impact); crew notification, including time before touchdown, type of landing, signal to assume protective brace position; crew coordination, including cabin and passenger preparation; passenger briefings; helper briefings; passenger protective brace positions; F/A protective brace positions (forward-facing jumpseat—head forward, aft-facing jumpseat—head back); impact and post-crash fire; assessing conditions; initiation evacuation; commands; opening primary/secondary exits; evacuation at overwing exits, including use of escape ropes; redirection techniques; evacuating persons who may need assistance; passenger control
- *Prior to Impact—Unanticipated:* F/A readiness; assuming protective positions; commanding passengers to assume protective positions
- *Prior to Impact—Anticipated:* Crew notification and coordination; passenger briefing and preparation; cabin preparation; helper briefings; assuming protective positions; F/A review of evacuation duties
- *After Impact—Unanticipated or Anticipated:* Assessing conditions; crew coordination procedures; releasing F/A seatbelts; ensuring activation of emergency lights; initiation of evacuation, including decision and signal to evacuate or not to evacuate; commanding passengers to release seatbelts and evacuate; assessing exits; redirection techniques; opening exits, including deploying slides; commanding helpers to assist; commanding passengers to evacuate at exit and run away from aircraft; assisting incapacitated passengers and crewmembers; removing appropriate emergency equipment from aircraft
- *Evacuation Techniques:* Aircraft landing attitudes; adverse conditions; assisting handicapped; directing passenger flow; slide egress

- *Post-Crash Rescue:* Role of F/A's
- *Survival in Uninhabited Area:* Group management; basic survival procedures on land

(6) *Unwarranted Evacuation:*

- *Passenger- or Crew-Initiated:* F/A readiness; assessing situation
- *Crew Coordination:* Method of communicating that an unwarranted evacuation is in progress
- *Stopping the Evacuation:* Commands; actions

(7) *Illness or Injury:*

- *General Principles of Care:* Effects of aircraft environment; crew medical responsibilities; crew coordination, including flightcrew notification; requesting and verification of medically qualified personnel; rules for administering medication; documentation and written reports; ground-to-air assistance; removal of ill or injured passengers
- *In-flight Medical Emergencies/Incidents:* Illness or injury symptom recognition and examination; attempt to obtain medical history; assessment of passenger; appropriate medical treatments; handling of passenger; aircraft limitations; crewmember incapacitation; apparent death in flight; review of contents and use of first aid equipment

(8) *Abnormal Situations Involving Passengers or Crewmembers:*

- *Passenger Abuse of F/A:* Crew coordination; recommended procedures
- *Passengers Who Appear to be Under the Influence of Intoxicating Substances:* Crew coordination; recommended procedures
- *Passengers Who May Jeopardize Aircraft or Passenger Safety:* Crew coordination; recommended procedures

(9) *Hijacking/Bomb Threat:*

- *Hijacking:* Specific company hijacking procedures; reinforcement of security training procedures; methods of communicating with other crewmembers when hijacking is threatened or in progress
- *Bomb Threat:* Specific company security procedures; reinforcement of security training procedures; crew coordination procedures; specific bomb search procedures; bomb handling and stabilization procedures for each aircraft

(10) *Turbulence:*

- *Basic Action (Dependent on Severity of Turbulence):* Flight crewmember notification procedures; communication procedures for securing passengers, crewmembers, cabin, galleys, serving carts
- *Severe Turbulence (Anticipated or Unanticipated):* Crew coordination procedures; appropriate actions
- *Mild Turbulence (Anticipated or Unanticipated):* Crew coordination procedures; appropriate actions

(11) *Other Unusual Situations (Recommended but not Required):*

- *Blown Tires:* F/A readiness
- *Condensation:* Passenger briefing; appropriate actions
- *Engine Shutdown:* Passenger briefing; appropriate actions
- *Engine/APU Torching:* Passenger briefing
- *Fuel Dumping:* Passenger briefing; appropriate actions
- *Rejected Landing/Missed Approach/ Rejected Takeoff:* F/A readiness
- *Malfunction of Lift Safety Interlock System:* Immediate actions and appropriate procedures

(12) *Previous Aircraft Accidents and Incidents:*

- *General:* Types and major causes of accidents; NTSB recommendations; survivability factors, including crewmember and passenger preparation for impact; ability of aircraft to withstand impact; ability of crewmembers to perform assigned duties after impact; emphasis on crew coordination and communication as critical elements in emergency situations
- *Accident/Incident Aftermath:* Coping with survival

1985. EMERGENCY DRILL TRAINING MODULES. Emergency drill training modules provide an opportunity for F/A's to gain experience in the performance of emergency procedures with the actual operation of emergency or safety equipment. Emer-

gency drill training consists of an integration of emergency equipment, emergency situation, and aircraft-specific training. These drills can be taught as either general to all aircraft or as aircraft-specific. For example, if all aircraft in an operator's fleet are equipped with the same type of portable oxygen bottle, the emergency drill would be taught as "general" to all aircraft. If, however, the aircraft in an operator's fleet are equipped with various types of portable oxygen bottles, the emergency drill would be taught as "aircraft-specific." The sequence of emergency drill training should be adjusted according to the complexity of the operator's type and number of aircraft, training mockups, and other training devices. For certain emergency drills it is appropriate to sequence emergency drill training after aircraft-specific training. For example, emergency drill training on emergency exits is more effective after training on the functions and controls of the emergency exits for specific aircraft. Emergency drill training is the performance and demonstration phase of emergency training. The objective of this training is to train each F/A to proficiency by reinforcing the concepts developed in the instruction phase of emergency training. The drills require the use of the specific type of emergency equipment as the equipment that is installed on the operator's aircraft; the equipment must have the identical dimensions, weight, forces, and specifications. Each of the drills should be as realistic as possible. For example, if artificial smoke is not used in an emergency evacuation drill, attempts should be made to simulate darkened conditions.

A. Training Criteria. Emergency drill training should be developed to ensure that F/A's obtain proficiency in emergency situations and have the ability to do the following:

- Correctly preflight and prepare emergency/safety equipment for each type of aircraft (when part of assigned duties)
- Identify the type of emergency and correctly utilize the appropriate emergency equipment
- Exercise good judgment in assessing an emergency situation
- Implement the appropriate emergency procedures and to coordinate actions and signals with other crewmembers
- Operate emergency/safety equipment for each type of aircraft
- Communicate effectively with crewmembers and passengers in an emergency situation

B. Training Module Content. The following are examples of training modules for the emergency equipment subject area. These examples of training modules encompass different types of operations and may not be applicable to an operator's specific type of operation. It should be noted that there are elements and events contained in these training modules which are not specified by the FAR but which are intended to provide POI's with further examples for consideration when evaluating training module content. These are examples only, and it is not intended that these examples indicate the only acceptable methods, sequence of instructional delivery, subject titles, or amount of detail.

1987. EMERGENCY DRILLS.

A. One-Time Emergency Drill Requirements. The following emergency drills are required to be accomplished at least one time during initial new-hire training (for the one-time emergency drill requirements of transition training see section 5 of this chapter). Included with each emergency drill are recommended elements or events that F/A's should be able to demonstrate satisfactorily.

(1) PBE Firefighting Drill. During a PBE firefighting drill, the student is required to fight an "actual" fire by actually discharging a fire extinguisher charged with the appropriate fire retardant agent while wearing PBE. PBE must be worn while fighting the actual fire. The following recommended elements and events apply to fighting the fire:

- *Approach to Fire/Smoke:* Ability to locate source of fire or smoke
- *Crew Coordination:* Ability to implement procedures for effective crew coordination and communication, including notification of flight crewmembers about fire situation
- *Donning and Activating PBE:* Ability to maneuver in limited space with reduced visibility and to effectively use the aircraft's communication system
- *Selection of Appropriate Fire Extinguisher:* Ability to identify class of fire; to select the appropriate extinguisher; to properly remove extinguisher from securing device
- *Actual Discharge of Fire Extinguisher on Fire:* Ability to prepare extinguisher for use; to operate and discharge extinguisher properly; to utilize correct firefighting techniques for type of fire
- *Fire Saturation:* Ability to completely extinguish fire

(2) Emergency Evacuation Drill. During an emergency evacuation drill, each student is required

to egress the aircraft or approved training device using at least one type of installed emergency evacuation slide.

- *Prior to Impact:* Ability to recognize and evaluate emergency; to assume appropriate protective position; to command passengers to assume protective position
- *After Impact:* Ability to implement crew coordination procedures; to release seatbelt; to ensure activation of emergency lights; to assess aircraft conditions; to initiate evacuation (dependent on signal or decision); to command passengers to release seatbelts and evacuate; to assess exit and redirect, if necessary; to open exit, including deploying slides and commanding helpers to assist; to command passengers to evacuate at exit and run away from aircraft
- *Actual Exit on Emergency Evacuation Slide:* Ability to correctly jump onto slide; to maintain correct body position while sliding; to land on feet and run away from aircraft
- *Special Sliding Techniques:* Awareness of methods for assisting special need passengers, such as handicapped, elderly, and persons in a state of panic

B. Additional Emergency Drill Requirements. The following emergency drills must be accomplished by students during initial new-hire and initial equipment training, and once every 24 calendar months during recurrent training. Included with each emergency drill are recommended elements or events that F/A's should be able to demonstrate satisfactorily.

(1) Emergency Exit Drill. During an emergency exit drill, students must operate each type of emergency exit in the normal and emergency modes, including the actions and forces required for deployment of the emergency evacuation slides.

- *Preflight Exit:* Ability to correctly preflight each type of emergency exit and evacuation slide or slideraft (if part of F/A's assigned duties)
- *Actual Disarming and Opening of Each Type of Door Exit in Normal Mode:* Ability to open exit properly by disarming door either manually or automatically; to verify girt bar disengagement; to assume correct body position; to use door controls correctly; to secure exit in open and locked position; to secure safety strap
- *Actual Closing of Each Type of Door Exit in Normal Mode:* Ability to close exit properly by removing safety strap (if installed); to release locking mechanism; to assume correct body position; to use door controls correctly; to secure exit in closed and locked position
- *Actual Arming of Each Type of Door Exit in Emergency Mode:* Ability to arm exit properly by checking if threshold is free of debris; to arm door either manually or automatically; to verify girt bar engagement
- *Actual Opening of Each Type of Door Exit in Emergency Mode:* Ability to open exit properly by assuming correct body/protective position; to use door controls correctly; to ensure that door is in open and locked position; to use manual slide inflation system to accomplish or ensure slide or slideraft inflation
- *Actual Opening of Each Type of Window Exit:* Ability to open exit properly by assuming correct body/protective position; to use controls correctly; to place window safely; to remove escape rope and position for use

(2) Hand Fire Extinguisher Drill. During a hand fire extinguisher drill, students must operate and discharge each type of installed hand fire extinguisher (such as Halon 1211, water, carbon dioxide, and dry chemical fire extinguishers). Fighting an actual or a simulated fire is not necessary during this drill.

- *Preflight:* Ability to correctly preflight each type of hand fire extinguisher (if part of F/A's assigned duties)
- *Operation:* Ability to correctly operate each type of hand fire extinguisher and to implement appropriate firefighting procedures; to locate source of fire or smoke and identify class of fire; to select appropriate extinguisher and remove from securing device; to prepare extinguisher for use; to actually operate and discharge extinguisher; to utilize correct firefighting techniques for type of fire

NOTE: The discharge of Halon extinguishing agents during firefighting drills is not appropriate unless a training facility is used that is specifically designed to prevent harm to the environment from the discharged Halon. When such facilities are not used, other fire extinguishing agents that are not damaging to the environment should be used during the drills.

- *Crew Coordination:* Ability to implement procedures for effective crew coordination and communication, including notification of flight crewmembers about the type of fire situation

(3) Emergency Oxygen System Drill. During an emergency oxygen system drill, each student must operate each type of emergency oxygen system, including PBE.

- *Preflight and Operation of Portable Oxygen Devices:* Ability to correctly preflight (if part of F/A's assigned duties) and actually operate portable oxygen bottles, including masks and tubing; ability to preflight and verbally demonstrate operation of chemical oxygen generators, including procedures for administering oxygen
- *Administering Oxygen from Portable Oxygen Bottles:* Ability to properly remove from securing device; to prepare for use; to operate oxygen device properly, including donning and activation; to administer oxygen to self, passengers, and to those persons with special oxygen needs; to utilize proper procedures for effective crew coordination and communication
- *Preflight and Operation of PBE:* Ability to correctly preflight (if required) and properly put on equipment; to actually activate equipment and maneuver in limited space with reduced visibility; to utilize the aircraft's communication system for effective crew coordination

NOTE: Several operators equip their aircraft with approved PBE units that have approved storage pouches fastened with two metal staples at one end. However, considerations of practicality and cost compel operators to use a less durable storage pouch for training purposes, one that lacks the staple fasteners. As a result, pilots and F/A's have been surprised that opening the pouch furnished on board requires more force than opening the training pouch. POI's should require crewmember training that includes the appropriate procedures for operating PBE. In those cases where pouches with staples are used for storage of the PBE unit, special emphasis in training should highlight the difference between the training pouch and the onboard pouch. The training pouch may be easy to open, but the approved, onboard pouch may require as much as 28 pounds of force to overcome the 2 staple fasteners.

- *Utilization of Aircraft Oxygen System:* Ability to manually open each type of oxygen mask compartment and deploy oxygen masks; to identify compartments with extra oxygen masks; to implement immediate action decompression procedures; to reset oxygen system (if applicable)

(4) Flotation Device Drill. During a flotation device drill, the student must put on, use, and inflate (as applicable) each type of individual flotation device.

- *Preflight:* Ability to correctly preflight (if part of F/A's assigned duties) each type of individual flotation device
- *Donning and Inflating Life Vests:* Ability to locate and remove from packaging; to properly put on and inflate (automatically and manually); to activate and deactivate locator light; to put on a small child or infant; to instruct children, nonswimmers, handicapped, and elderly on how to use and when to inflate; to demonstrate swimming techniques with a life vest
- *Flotation Seat Cushions:* Ability to remove from seat and properly use; to demonstrate swimming techniques using a seat cushion

(5) Ditching Drill (if applicable). During a ditching drill, students must perform the "prior to impact" and "after impact" procedures for a ditching, as appropriate to the specific operator's type of operation.

- *Crew Coordination:* Ability to implement crew coordination procedures, including briefing with captain to obtain pertinent ditching information and briefing F/A's; to coordinate timeframe for cabin and passenger preparation
- *Passenger Briefing:* Ability to adequately brief passengers on ditching procedures, including information on the removal and stowage of restrictive personal articles; removal, donning, inflation of life vests; positioning of seats and tray tables; stowage of carry-on baggage; securing and release of seatbelts; appropriate brace positions; location of exits; location and boarding of rafts; helper briefings
- *Passenger and Cabin Preparation:* Ability to ensure that all passenger briefing procedures are implemented properly; to ensure that cabin is prepared, including the securing of carry-on baggage, lavatories, and galleys

- *Launching of Sliderafts or Rafts:* Ability to assess conditions; to demonstrate how to properly deploy and inflate sliderafts; to remove, position, attach to aircraft, and inflate rafts; to use escape ropes at overwing exits; to command helpers to assist; to use slides and seat cushions as flotation devices; to remove appropriate emergency equipment from aircraft
- *Boarding of Passengers and Crew into Slideraft or Raft:* Ability to command passengers to exit aircraft, to inflate life vests, to board rafts properly; to initiate raft management procedures, including disconnecting rafts from aircraft, applying immediate first aid, rescuing persons in water, salvaging floating rations and equipment, deploying sea anchor, tying rafts together, activating or ensuring emergency locator transmitter in operation; to initiate basic survival procedures, including removing and utilizing survival kit items, repairing and maintaining raft, ensuring protection from exposure, erecting canopy, communicating location, providing continued first aid, providing sustenance
- *Use of Life Lines:* Ability to use heaving line to rescue persons in water; to tie sliderafts or rafts together; to use life line on edge of slideraft or raft as a handhold and to secure survival kit items

(6) Liferaft Removal and Inflation Drill (if applicable). During a liferaft removal and inflation drill, students must observe the removal of a liferaft from the aircraft or training device, as well as the inflation of a liferaft.

- *Raft Removal:* Removal of raft from raft compartment, including using correct method of handling raft; positioning raft at exit; removing raft lanyard; securely attaching raft lanyard to aircraft interior before raft launching; commanding helpers to assist
- *Raft Launching and Inflation:* Ensuring that exit is open and usable; launching raft into water and inflating raft; commanding passengers to evacuate at exit and board raft; detaching raft from aircraft; commanding helpers to assist; initiating raft management and basic survival procedures
- *Raft Launching at Window Exits:* Removing and positioning raft from raft compartment to window exit; removing raft lanyard; securely attaching raft lanyard to aircraft interior; ensuring that window exit is open and usable; removing escape rope and attaching to fitting on wing; carrying raft onto wing and launching raft off leading edge of wing into water; inflating raft; commanding passengers to evacuate at window exit, to walk onto wing holding escape rope, and to board raft; detaching raft from aircraft; commanding helpers to assist

(7) Slideraft Transfer Drill. During a slideraft transfer drill, students must observe the transfer of each type of slideraft pack from an unusable door to a usable door.

- *Disconnecting Slideraft at Unusable Door:* Crew coordination procedures, assessing conditions to determine usable door, redirecting passengers to usable slideraft, completing specific steps for slideraft disconnection at unusable door
- *Slideraft Installation and Deployment at Usable Door:* Positioning slideraft pack at usable door, completing specific steps for slideraft installation at usable door

(8) Slide or Slideraft Deployment, Inflation, and Detachment Drill. During a slide or slideraft deployment, inflation, and detachment drill, students must observe the deployment, inflation, and detachment of the slide or slideraft pack from the aircraft or training device.

- *Slides With Quick-Release Handle:* Engaging slide girt bar in floor brackets; opening of door and verification of slide deployment; inflating slide either manually or automatically; disconnecting slide from aircraft for use as a flotation device
- *Slides Without Quick-Release Handle:* Engaging slide girt bar in floor brackets; opening door and verifying slide deployment; disconnecting slide from aircraft; inflating slide for use as a flotation device
- *Sliderafts:* Arming sliderafts for automatic inflation; opening door and verifying inflation; disconnecting slideraft from the aircraft

(9) Emergency Evacuation Slide Drill. During an emergency evacuation slide drill, students must observe the deployment and inflation of an evacuation slide, including participants egressing from the cabin via the evacuation slide.

- *Opening Exit:* Opening armed exit with slide or slideraft deployment and inflation

- *Evacuation of Aircraft:* Commanding the evacuation; having participants egress from aircraft via the evacuation slide and run away to a safe distance

NOTE: In drills No. 6, 7, 8, and 9, F/A's are not required to actually remove and inflate liferafts or to deploy, inflate, detach, or transfer slides or sliderafts. FAR § 121.417(c)(2)(ii), however, requires that these drills at least be observed. FAR § 121.417(f) defines "perform" and "observed." "Perform" is defined as the accomplishment of "a prescribed emergency drill using established procedures that stress the skill of those persons involved in the drill." "Observe" is defined as watching "without participating actively in the drill." When evaluating an "observed" drill, either with audiovisual aids or with participants performing the drill, the inspector must determine whether it adequately conveys a clear understanding of each of the steps involved to perform a required function.

1989. ADAPTATION OF GENERAL EMERGENCY TRAINING CURRICULUM SEGMENTS TO THE VARIOUS CATEGORIES OF TRAINING. The general emergency training curriculum segment is required in the following categories of training: initial new-hire, recurrent, and requalification. When determining if general emergency training curriculum segments are appropriately adapted to the different categories of training, POI's should use table 3.14.4.1.

A. Initial New-Hire Category of Training. Operators must develop and obtain approval of a general emergency training curriculum segment for the initial new-hire category of training. An operator who operates both reciprocating-powered and turbojet-powered aircraft may be required to develop separate general emergency curriculum segments for incorporation into the initial new-hire category of training appropriate to these types of aircraft.

B. Transition Category of Training. There is requirement for a separate general emergency curriculum segment for the transition category of training. For this category of training, F/A's will have previously received the appropriate general emergency training during initial new-hire training. Aircraft-specific emergency training, however, must be included in the aircraft ground training segment of a transition curriculum. Aircraft-specific emergency training may require elements that are in a general emergency training curriculum segment. For example, an operator may not operate an aircraft equipped with escape slides. If the operator subsequently adds an aircraft so equipped, training on slides must be included in transition training.

C. Recurrent Category of Training.

(1) FAR Part 121. FAR Part 121 operators must develop and obtain approval for a separate general emergency training curriculum segment for the recurrent category of training. Usually it will be appropriate to have two general emergency curriculum segments, one which reflects a 12-month cycle of emergency equipment and emergency situation training, and another which reflects a 24-month cycle of emergency drill training. It is acceptable, however, to incorporate the emergency drill "hands-on" training into a single curriculum segment, provided the segment contains a requirement that F/A's must receive the emergency drill training at least once every 24 months.

(2) FAR Part 135. FAR Part 135 operators should develop and obtain approval for a separate general emergency training curriculum segment for the recurrent category of training. The recurrent general emergency curriculum segment must contain "hands-on" training in each annual cycle.

D. Requalification Category of Training—FAR Parts 121 and 135. The determination of whether a general emergency curriculum segment is appropriate for the requalification category of training depends on the length of time an F/A has been unqualified. In general, F/A's become unqualified for not completing recurrent training for more than 1 year.

1991. CURRICULUM SEGMENT COMPLETION REQUIREMENTS. Completion of the curriculum segment must be certified by an instructor or a supervisor indicating that the student has successfully completed the course. This certification is usually based on the satisfactory evaluation of a student's performance. With some training methods, such as computer-based instruction (CBI), the certification may be based on student progress checks administered during the course.

1993. EVALUATION OF TRAINING HOURS.

A. FAR Parts 121 and 135 do not specify a minimum number of training hours for general emergency training curriculum segments. When approving these curriculum segments, the FAA must consider the complexity of the type of operation to be conducted and the complexity of the aircraft to be used. The following table provides guidance and direction for POI's when approving general emergency training curriculum segments. The table provides "national norms" for the initial new-hire general emergency training hours. The purpose of having established national norms is to assist the POI when evaluating

proposed programs for new operators or when evaluating proposed programs introducing new aircraft by existing operators. For a complex type of operation the training hours may need to exceed the national norm, while for a less complex type of operation the training hours below the national norm may be acceptable. National norms have not been established for recurrent general emergency training.

TABLE 3.14.4.1.

TRAINING HOURS			
TYPE OF OPERATION	EMERGENCY EQUIP/ SITUATIONS	EMERGENCY DRILLS	TOTAL HOURS
LAND OPERATIONS	10.0	4.0	14.0
EXTENDED OVERWATER OPERATIONS	4.0	3.0	7.0
OPERATIONS ABOVE 25,000 FEET	2.0	1.0	3.0

B. Table 3.14.4.1. lists three general levels of operational complexity. The basic level of complexity for the initial new-hire training category is considered to be "land operations." The national norm for land operations is 14 hours for the general emergency training curriculum segment, divided into 10 hours for emergency equipment/situations and the remaining 4 hours for emergency drills. The national norm for "extended overwater operations" is an additional 7 hours divided into 4 hours for emergency equipment/ situations and the remaining 3 hours for emergency drills. The national norm for "operations above 25,000 feet" is an additional 3 hours, divided into 2 hours for emergency equipment/situations and the remaining 1 hour for emergency drills. For an operator conducting all three operational complexities, the national norm is a total of 24 hours for the general emergency training curriculum segment.

1995. EVALUATION OF CABIN AND EXIT MOCKUPS. Hands-on emergency drill training for items such as emergency exits and passenger oxygen systems should be conducted in either a static aircraft, an approved cabin mockup training device, or an approved exit mockup training device. Cabin and exit mockup training devices should be representative of a full-scale section of an aircraft. Cabin mockups should include operational doors, window exits, slides, rafts, and other equipment used in emergency drill training. Cabin or exit mockup training devices shall not be approved unless they have been evaluated by an FAA inspector and determined to be adequate. Generally, cabin mockups are acceptable if they are representative of the operator's aircraft with the appropriate equipment installed, and they are full-scale in cross section. Generally, exit mockups are acceptable if the forces required to open them closely duplicate normal and emergency conditions with the slide or slideraft installed, and if the mechanisms and instructions required to operate them are representative of the operator's aircraft.

1997. EVALUATION OF F/A GENERAL EMERGENCY TRAINING CURRICULUM SEGMENT OUTLINE FOR INITIAL APPROVAL. When evaluating a general emergency training curriculum segment outline for initial approval, inspectors must determine whether the training modules contain the information required for F/A's to perform emergency duties and procedures without supervision. Inspectors should use the job aid in this section when evaluating the proposed curriculum segment outline (see figure 3.14.4.1.).

1999. F/A GENERAL EMERGENCY CURRICULUM SEGMENT JOB AID.

A. The F/A General Emergency Curriculum Segment Job Aid (see figure 3.14.4.1.) is provided to assist the inspector when evaluating this curriculum segment. This job aid covers the three distinct subject areas of general emergency training: "emergency equipment" training, "emergency situation" training, and "emergency drill" training. The job aid is intended to assist inspectors during the evaluation of individual general emergency training curriculum segment modules.

B. When using the job aid, an inspector should make a side-by-side comparison of the operator's proposal to make the following determinations:

- Whether the training modules provide for training on the required elements and events in terms of F/A duties and procedures

- Whether sufficient training module elements and events are outlined to ensure that the appropriate depth and scope of the material will be presented

C. The job aid is organized with training subjects listed vertically in the left column and evaluation criteria listed horizontally across the top. Inspectors may use the spaces within the matrix for items such as notes, comments, dates, or checkmarks. There are also blank columns and rows on the job aid for inspectors to include additional training modules or evaluation criteria.

2000.–2010. RESERVED.

FIGURE 3.14.4.1.
F/A GENERAL EMERGENCY CURRICULUM SEGMENT JOB AID
SUBJECT AREA 1: EMERGENCY EQUIPMENT TRAINING

TRAINING SUBJECTS	EVALUATION CRITERIA			
	ADEQUACY OF ELE-MENTS/ EVENTS	ADEQUACY OF COURSEWARE	TRAINING AIDS AND FACILITIES	
Ditching Equipment*				
Ground Evacuation Equipment*				
First Aid Equipment*				
Portable Oxygen Systems				
Firefighting Equipment*				
Emergency Exits				
Additional Emergency Equipment				

*Required by FAR § 135.331(b)(2)

FIGURE 3.14.4.1.—Continued
F/A GENERAL EMERGENCY CURRICULUM SEGMENT JOB AID
SUBJECT AREA 2: EMERGENCY SITUATION TRAINING

TRAINING SUBJECTS	EVALUATION CRITERIA			
	ADEQUACY OF ELEMENTS/ EVENTS	ADEQUACY OF COURSEWARE	TRAINING AIDS AND FACILITIES	
Decompression*				
Fires*				
Ditching*				
Ground Evacuation*				
Unwarranted Evacuation				
Illness or Injury*				
Abnormal Situation with Passenger or Crewmember*				
Hijacking/Bomb Threat*				
Turbulence				
Other Unusual Situations*				

*Required by FAR § 135.331(b)(3)

FIGURE 3.14.4.1.—Continued
F/A GENERAL EMERGENCY CURRICULUM SEGMENT JOB AID
SUBJECT AREA 3: EMERGENCY DRILL TRAINING

TRAINING SUBJECTS	EVALUATION CRITERIA			
	ADEQUACY OF ELEMENTS/ EVENTS	ADEQUACY OF COURSEWARE	TRAINING AIDS AND FACILITIES	
ONE-TIME DRILLS: Initial New-Hire Training				
PBE/Firefighting				
Emergency Evacuation*				
PERFORMANCE DRILLS: Initial New-Hire and Initial Equipment Training; Once Every 24 Months During Recurrent Training				
Emergency Exit*				
Hand-Held Fire Extinguishers*				
Emergency Oxygen System*				
Flotation Devices*				
Ditching*				
OBSERVATION DRILLS: Initial New-Hire and Initial Equipment Training; Once Every 24 Months During Recurrent Training				
Liferaft Removal and Inflation*				
Slideraft Transfer				
Slideraft Deployment, Inflation, and Detachment				
Emergency Evacuation/Slide				

*Required by FAR § 135.331(c) (Time Sequence not specified.)

[PAGES 3-1093 THROUGH 3-1104 RESERVED]

CHAPTER 15. MANUALS, PROCEDURES, AND CHECKLISTS

SECTION 2. APPROVAL AND ACCEPTANCE OF MANUALS AND CHECKLISTS

2099. GENERAL. This section contains direction and guidance for principal operations inspectors (POI) when approving or accepting an operator's manuals and checklists. This process is based on the general process for approval or acceptance described in volume 1, chapter 4, section 6, of this handbook.

A. The Approval Process. The approval process for a Federal Aviation Regulations (FAR) Part 121 operator's checklist normally consists of phases one, two, three, and five of the general process. It may be necessary, however, for a POI to require that phase four (the demonstration phase) be included in the approval process.

B. The Acceptance Process. The acceptance process for a manual, manual section, or a FAR Part 135 operator's checklist normally consists of phases one, two, and three of the general process. The operator must submit current copies of required manuals to the POI, and in the case of FAR Part 135 operators, the operator must also submit aircraft checklists for Federal Aviation Administration (FAA) review. An operator's entire manual system must be reviewed during the document compliance phase of initial certification (see volume 2, chapter 2, section 3, of this handbook). Once an operator is certified, the operator may revise, distribute, and use accepted material even though the POI has not completed a review of it. If, after a thorough review, the POI determines that portions of the manuals or checklists are unacceptable, the operator must revise the unacceptable portions.

NOTE: Each phase of the general process for approval or acceptance is discussed as if it is separate and distinct; however, at times the phases may overlap.

C. Evaluation of Manuals for FAA Acceptance or Approval. An operator may develop and publish in its manual any policy, method, procedure, or checklist that the operator finds necessary for the type of operations conducted. These policies, methods, procedures, and checklists, however, must comply with the FAR and be consistent with safe operating practices. POI's should encourage operators to be innovative and progressive in developing such policies, methods, procedures, and checklists. The POI's role in the review process is to provide an independent and objective evaluation of the operator's manual material. The POI must ensure that the operator's material complies with the FAR, is consistent with safe operating practices, and is based on sound rationale or demonstrated effectiveness.

D. Discrepancies. When a POI finds a discrepancy in an operator's existing manual material, the POI shall take action to have that discrepancy resolved. Usually such discrepancies can be resolved through informal discussions. When an informal discussion cannot resolve the discrepancy, however, the POI is required to formally withdraw FAA approval or acceptance from the operator (see paragraph 2111 of this section for guidance on the formal actions that may be taken).

2101. PHASE ONE: ESTABLISHING A FRAMEWORK FOR REVIEW. The first phase of the approval or acceptance process begins with communication between the FAA and the operator (either a current certificate holder or an applicant for a certificate). There are three occasions when approval or acceptance of manuals and checklists is required, as follows:

- When an applicant applies for a certificate
- When an existing operator determines if a change is necessary
- When, as the result of an investigation or normal surveillance, the POI determines if a manual, a manual section, or a checklist is inadequate or deficient

A. Determining Basic Requirements Applicable to the Operator. The primary task of the POI during phase one is to determine the basic requirements that the operator must meet to obtain acceptance or approval of a manual or checklist. The POI must communicate these requirements to the operator. To do this, the POI should review the appropriate sections of this handbook (particularly figures 2.1.1.1. through 2.1.1.3. in volume 2, chapter 1, section 1) and any advisory circulars (AC), air carrier operating

bulletins (ACOB), exemptions the operator may hold or is applying for, operation specifications, and any deviations applicable to subjects the operator must address in its manual or checklist. Both the POI and the operator must clearly understand the topics and level of detail the operator is required to have in the material to be submitted during phase two of the process. During phase one, the POI should make the following determinations and communicate them to the operator:

- Whether the submission will involve approval or acceptance
- Whether there is a need for validation tests or other demonstrations
- Whether there is a need for supplementary documentation, analysis, or other data to support the submission

B. Methods for Manual or Checklist Organization. During phase one, the POI should inform the operator that there are various methods that can be used to organize and format those manuals, manual sections, and checklists requiring FAA approval/acceptance. The POI may inform the operator of the content of the following subparagraphs, which describe at least four possible methods that an operator may use:

(1) Limited Content. An operator may choose to limit the content of the manual solely to approved material. When this method is used, the entire manual must be accepted and the operator may not revise the manual without additional review by the POI. While this method facilitates FAA review and acceptance, the manual may be difficult to use because the intended user may have to frequently switch back and forth between the approved checklists and other manuals containing accepted material. When the operator chooses this method, POI's must ensure that a header or footer is on each page indicating that the material is FAA-approved.

(2) Grouping Material. An operator may choose to group the FAA-approved material in specified sections of the manual and place accepted material in the remaining sections. With this method, the POI must ensure that a header or footer is on each page of the approved sections indicating that the material on that page is FAA-approved. The operator may submit the approved and accepted sections to the POI as separate packages.

(3) Interspersed Material. An operator may choose to intersperse FAA-approved material and accepted material throughout the manual. When an operator chooses this method, the POI must ensure that the operator has clearly identified approved material each time it appears in the manual. This method of organization allows for efficient manual use, but makes the operator's publication process and the approval process difficult.

(4) "Approval Document." The operator may choose to place material in an "approval document" solely for the purpose of obtaining FAA approval of that material. An approval document is a document and therefore may not be used as a manual. After the document has been approved, the operator must develop user manuals that incorporate the approved information from the document along with detailed guidance and supplementary information. When this method is used, the user manuals are treated as "accepted" material and do not have to be individually approved. The POI must, however, review the user manuals to ensure that the information in them is consistent with the approval document. When using this method, the operator may revise the information in user manuals without prior FAA approval, provided the revision is consistent with, and does not conflict with, the information in the approval document. If the operator or the POI finds it necessary for the approval document to be revised, the operator must submit the proposed revision for review and approval. A revision to an approval document must be approved before the operator can incorporate the changed information into the user manuals. When an operator uses this method for submitting manual or checklist material for FAA approval, POI's must ensure that the operator has stated on the first page of the user manuals that the manual contains FAA-approved material. The manuals or checklists provided to the user, however, do not have to be specifically identified as being FAA-approved ones.

C. Submission of Material. During phase one, the POI should advise the operator on how to submit the documents, manuals, checklists, and subsequent revisions for approval or acceptance.

(1) FAA Approval Submission. For material that requires FAA approval, the POI should advise the operator to submit the following:

- Two copies of the document, manual, manual section, checklist, or revision to be approved; one copy of the printed version of the electronic checklist (as applicable); one copy of a report indicating differences between the proposed and current versions of the electronic checklist (as applicable); or
- One copy of the document, manual, manual section, checklist, or revision, and two cop-

ies of the page control sheets for the material (The page control sheets must show an appropriate revision number or original page number for each page and the effective date of each page.)

- A copy of any supporting documentation or analysis

(2) FAA Acceptance Submission. For material that is to be evaluated for acceptance by the FAA, the POI should advise the operator to submit the following:

- A copy of the manual, manual section, checklist, or revision to be reviewed
- A copy of the page control sheets for the material to be reviewed, when appropriate

D. Coordination of Submitted Documents. POI's should encourage operators to coordinate drafts of manuals and checklists and revisions before making a formal submission. Mutual agreement on major points should be reached between the operator and the POI before the material is put in final form. Operators should be advised by the POI's not to publish or distribute material requiring FAA approval until after they have received written notification that the material has been approved. An operator who prepares and distributes such material before receiving approval may have to make costly changes. The POI should encourage the operator to establish methods that streamline and simplify the process for both the operator and the POI.

2103. PHASE TWO: PRELIMINARY REVIEW. Phase two consists of the POI or a qualified inspector conducting a preliminary review (as opposed to a detailed analysis) of the operator's submission. This preliminary review is intended to ensure that the operator's submission is clear and contains all required documentation. The phase two review should be conducted promptly after receipt of the operator's submission. If, after preliminary review, the submission appears to be complete and of acceptable quality, or if the deficiencies are immediately brought to the operator's attention and can be quickly resolved, the POI may begin the phase three in-depth review (see paragraph 2105 of this section). If the submission is incomplete or obviously unapprovable or unacceptable, the process is terminated and the POI must immediately return the submission (preferably within 5 working days) with an explanation of the deficiencies. POI's should return the submission to the operator promptly so that the operator will not erroneously assume that the POI is continuing the process to the next phase.

2105. PHASE THREE: IN-DEPTH REVIEW. Phase three is a detailed analysis of the operator's submission. During this phase, a qualified inspector must review the operator's submission in detail to determine that the submission is complete and technically correct. The time to complete phase three depends on the scope and complexity of the submission. During the phase two preliminary review, the POI should determine whether the review can be completed within 10 working days. If any part of the submission requires FAA approval, and the POI determines that it will take longer than 10 working days to complete the review and approval process, the POI shall give the operator an estimate of the time it should take to complete the process.

A. The phase three review and analysis should confirm that the operator's submission conforms to, or is consistent with, the following:

- The FAR
- Criteria and guidance in this handbook
- The operator's operations specifications
- Criteria and guidance in AC's
- Applicable aircraft flight manuals, manufacturer's operating bulletins, and airworthiness directives
- Safe operating procedures
- The operator's cockpit resource management policies
- Flight Standardization Board (FSB) and Flight Operations Evaluations Board (FOEB) training recommendations

NOTE: The direction and guidance in this chapter for reviewing procedures and checklists have been developed after consultation with knowledgeable and experienced personnel in the air transportation industry, aircraft manufacturers, and the FAA. The information presented is considered to be the best guidance currently available on the topic. POI's should realize, however, that circumstances vary widely. The best set of procedures for one circumstance may not work well in another circumstance. Two recommendations may be in conflict. In such cases, the appropriate resolution must be achieved through compromise. For example, it may be more important for an operator's checklist and procedures design policies to be internally consistent than for an individual procedure to be designed in a specific way.

B. The POI should thoroughly consider the operator's experience and history when evaluating proce-

dures and checklists. When an operator has a history of successful operations, the POI should normally approve submissions consistent with the operator's existing procedures. When an operator has an incident or accident attributable to crew error, the POI must thoroughly examine the basic assumptions and policies in the design of the operator's checklists and operating procedures.

C. Review of electronic checklist modifications in applications with the ability to automatically detect the completion of an action shall include verification that this detection is based on monitored conditions that are consistent with the objective of the action (for example, a checklist action item for LANDING GEAR . . . DOWN would show complete on the sensing of the gear handle being down and the gear indication being down). The review and verification should be accomplished using a paper copy of the electronic checklist annotated with the monitored condition for each action whose completion is automatically detected.

2107. PHASE FOUR: VALIDATION TESTS. Operators should be encouraged by POI's to conduct validation tests of operating procedures and checklists during the development process. These validation tests should be conducted before the operator submits the proposed procedures and checklists for FAA review and approval. Whenever possible, the POI or a qualified inspector should observe these tests. Under certain circumstances, a validation test may have to be conducted after the phase three in-depth review. In other circumstances, especially for minor types of revisions or simple procedures or checklists, validation tests may not be warranted or appropriate. Before approving operating procedures and checklists, POI's should consider the following guidance concerning validation tests.

A. Aircraft operating procedures and checklists should be tested in realistic real-time scenarios, with a full crew complement.

B. Validation tests of normal procedures may be conducted in a flight simulator, in a flight training device, on training flights, or in conjunction with proving tests.

C. Validation tests of nonnormal, abnormal, and emergency procedures or checklists should be conducted in a flight simulator or training device. Tests of nonnormal and emergency procedures and checklists may be conducted in an aircraft; however, the operator must ensure that the test can be conducted safely. Testing of nonnormal and emergency procedures and checklists shall not be conducted during revenue service.

D. Operators may submit evidence that a qualified party (such as the manufacturer or another operator) has already conducted a validation test of a procedure or checklist. When such evidence is available, the POI should not require a validation test unless the operator's circumstances are significantly different from those in which the original tests were conducted.

E. Changes in the wording of a procedure may not actually change the procedure. In such cases, validation tests are not necessary.

F. POI's shall require that operators validate the safety and effectiveness of any addition, deletion, or change of sequence in the steps of a nonnormal or emergency checklist, through validation testing.

G. For those operators who intend to convert immediate action items to or from challenge-do-verify items on an emergency checklist, POI's shall require that they test the modified procedure to ensure that it is safe, effective, and has no adverse effects. POI's shall consult with the appropriate Aircraft Evaluation Group (AEG) before approving such changes.

H. The addition or deletion of individual items to a normal phase checklist does not usually need to be validated by a test. If the POI is of the opinion that the change significantly alters crewmember assignments or workload distribution, the POI shall require a validation test.

I. While electronic checklists must comply with the same guidelines discussed here, modification to an existing electronic checklist does not in itself require a validation test if the POI deems the modification to be minor.

2109. PHASE FIVE: GRANTING FAA APPROVAL. Phase five consists of the POI's granting FAA approval to manuals, manual sections, and checklists. During this phase the POI must formally notify the operator of the approval and also complete a specific record of the approval. For manuals, manual sections, and FAR Part 135 aircraft operating checklists, which are not required to have FAA approval, written notification of acceptance is not required and shall not be given (see paragraph 2099 of this section).

A. Notification of Approval. When the POI decides to approve a document, manual, manual section, or checklist, the following procedures apply:

(1) For a document, manual, or checklist that contains page control sheets, the POI shall annotate both copies of the page control sheets with the phrase "FAA-Approved." Under the words "FAA-Approved," POI's shall enter the effective date of approval and sign both copies. The operator may

preprint the words "FAA-Approved" and blank lines for the date and signature on the page control sheets, or the POI may use a stamp to add the approval annotation on each sheet.

(2) For manuals, manual sections, or checklists that do not contain page control sheets, the approval annotation must be placed by the POI on each page of the material. In this case the approval annotation must be made on two copies of the material. The annotation shall be the same as discussed in subparagraph 2109A(1). This procedure should be used only for very short manuals, manual sections, or checklists (usually fewer than five pages) or when the use of page control sheets is not practical or serves little purpose.

(3) When page control sheets are used, the POI shall return one copy of the annotated page control sheets to the operator. In the remaining cases, one copy of the approved material must be returned to the operator with a notification letter that states that the material is approved. This letter should also contain a statement advising the operator to maintain for its records the signed page control sheets or the material with the approval annotation. The POI shall retain the second copy of the signed page control sheets or the annotated material in the district office files.

(4) When electronic checklists are submitted for approval, the operator will prepare a release/cover sheet for the printed version of the electronic checklist. The release/cover sheet will contain the preprinted words and lines as discussed in subparagraph 2109A(1). The POI's annotation shall be the same as discussed in subparagraph 2109A(1).

B. Notification of Disapproval. The coordination, revision, and editing activities that take place throughout all phases of the process should eventually result in approved products. Under certain circumstances, however, it may be appropriate for the POI to terminate the process. For example, the operator may not take any action on the material for 30 days. To terminate the approval process, the POI shall return the entire submission to the operator with a letter stating that the FAA is unable to grant approval, along with the reasons why it cannot be granted.

C. District Office Records. The POI shall maintain a record of approval for each operator-submitted document, manual, manual section, and checklist. Records of approval to revisions of this material must also be maintained. The records should consist of page control sheets (or approved material if page control sheets are not used), notification letters, and any other related correspondence. While superseded portions of documents, manuals, or checklists do not have to be retained, POI's may retain this type of material if they determine that it is appropriate. The POI should include with the material in the operator's file a brief memorandum containing the reasons for retaining the material.

2111. NOTIFICATION OF DEFICIENCIES. When any portion of approved material that is currently in use is found to be deficient, the POI shall notify the operator and request prompt action to resolve the deficiency. Deficiencies can usually be resolved through an informal process; however, when this cannot be done, the POI must formally notify the operator by letter that the deficiency must be corrected.

A. Deficiency Involves FAA-Approved Material. If the deficiency involves FAA-approved material, the letter must contain a clear statement that FAA approval of the material will be withdrawn as of a specific date if corrective action is not taken. The letter should also contain a statement that the material does require FAA approval and that after the specified date, any operations without that approval will be in violation of the FAR.

B. Deficiency Involves Operator-Developed Material. If the deficiency involves operator-developed material that is accepted by the FAA, the letter should clearly indicate the material that is deficient and the reasons why it is deficient. If, after such notification, the operator still fails to take appropriate corrective action, the POI should attempt to negotiate a reasonable solution. When these attempts fail, the POI may, with Regional Flight Standards Division (RFSD) approval, amend the operator's operations specifications to withdraw the authorization for conducting the operations affected by the deficiency.

2113. EMERGENCY REVISIONS. For safety reasons, an operator may sometimes find it necessary to immediately revise FAA-approved material before there is an opportunity to coordinate the revision with the POI. In such cases, the operator should take action as necessary to make the revision effective (such as alert bulletins and dispatch messages). For example, an operator may become aware of a deficiency after business hours, on a weekend, or on a holiday. In such cases, the operator should take immediate action. When emergency revisions to FAA-approved material are made, the operator shall notify the POI of the revision at the earliest practical opportunity (preferably

the first working day after the action). Since there is a wide variety of reasons that an emergency revision action may be necessary, the POI must determine the best course of action to be taken after being notified of the emergency revision. POI's shall make assigned operators aware of this guidance.

2114.–2124. RESERVED.

[PAGES 3-2075 THROUGH 3-2080 RESERVED]

- Procedures for post-flight handling of passenger injury, illness, or incidents involving passenger altercations and interference with crewmembers
- Employee/passenger accidents and injuries
- Adverse weather conditions, such as tornadoes and hurricanes or other adverse conditions such as earthquakes (if such conditions are likely to occur at the operator's line stations)
- Emergency evacuation of aircraft while parked (This should include procedures for both the flightcrew and flight attendants (F/A's) to activate the aircraft emergency lighting systems during an emergency evacuation, regardless of the perceived ease with which an evacuation can be accomplished; and passenger egress procedures for crewmembers and other operations personnel. These procedures should include the requirement that whenever passengers are on board the aircraft prior to airplane movement on the surface, that at least one floor-level exit must be usable for the egress of passengers through normal or emergency means.)
- Aircraft rescue and firefighting (ARFF) emergency notification procedures while parked (POI's shall encourage their assigned operators to develop explicit ARFF emergency notification procedures for crewmembers and other operations personnel to employ in the event of an emergency occurrence on their aircraft while they are parked.)

NOTE: ARFF notification procedures apply to situations where ARFF equipment is located both on and off airports. These procedures should include information concerning (1) whom to notify (such as airport fire department, airport control tower, alternate facility if control tower is closed); (2) the means of notification to be used (such as jetway telephone, including ARFF telephone numbers; and aircraft radio communication system, including ARFF radio frequencies); and (3) the persons by job title whom the operator determines shall implement notification procedures in the event of an emergency occurrence on the operator's aircraft. For passenger-carrying operations, if the operator's ARFF procedures require its crewmembers to implement these procedures, then the following guidance should be included: In the event of an aircraft fire or other emergency scenario involving aircraft evacuation, the first actions of crewmembers and/or other personnel qualified in accordance with FAR § 121.391(a) should be to initiate the evacuation of the aircraft occupants. Once the crew has determined that all aircraft occupants have been evacuated, then the crewmember(s) designated by the operator should initiate the ARFF emergency notification procedures.

(8) Contract Services. POI's must ensure that the GOM and GMM, as appropriate, contain policy and guidance concerning the interrelationship between the operator's personnel and the personnel of organizations who provide contract services at line stations. Contractor personnel are required to be trained on operator-specific procedures. The appropriate manual must contain the specifications for the following: the types of training to be given to contractor personnel, who is responsible for providing the training, and who is responsible for keeping records of the training. Although the contractor may be delegated this responsibility, the operator has final responsibility.

(9) Trip Records. POI's must ensure that the operator's GOM contains policies, procedures, and guidance concerning the preparation and disposition of trip records at line stations. Trip records include documents such as dispatch and flight releases, flight plans, weather, NOTAM's, oceanic plotting charts, load manifests, and weight and balance documents. The manual material must specify who is responsible for preparing the trip records, the coordination activities that must be accomplished during the trip record preparation process, and the intermediate and final disposition of the trip records. The POI must ensure that the policies, procedures, and guidance in this manual material consistently contain accurate information for crewmembers and flight operational control personnel.

(10) Local Conditions at Line Stations. Personnel at line stations have immediate access to and knowledge of various conditions and activities that could affect flight operations at those line stations. Examples of local conditions and activities include the following: weather conditions, runway and taxiway conditions, airport construction activities, and new obstacles observed in the airport takeoff flight paths. As such, inspectors must ensure that an operator's GOM contains instructions and procedures so that line station personnel can provide the operator with local condition reports. This manual material must contain clear instructions about the circumstances in which line station personnel are authorized to suspend or delay flight operations.

2149. PASSENGER BRIEFING PROCEDURES. POI's must ensure that the operator's GOM or flight manual, as appropriate, specifies the procedures to be used for pre-takeoff, en route, and post-landing briefings of passengers. Operators who use F/A's may pub-

lish F/A user manuals as sections in their GOM's. The GOM or F/A user manual must contain the briefings to be given. Passenger briefing cards must be used to supplement the oral briefings. These passenger briefing cards must depict all of the required items that are addressed during the oral briefings. AC 121-24, "Passenger Safety Information Briefing and Briefing Cards," contains guidance on passenger safety information and briefing cards.

2151. EXIT SEATING PROGRAM. FAR §§ 121.585 and 135.129, "Exit Seating," regulate exit seating in aircraft operated by U.S. air carrier and commercial operators, except for on-demand operations with aircraft having 19 or fewer passenger seats and commuter operations with aircraft having 9 or fewer passenger seats. These regulations prescribe requirements relating to the seating of airline passengers near emergency exits. POI's must ensure that FAR Parts 121 and 135 operators' manuals, as appropriate, contain the applicable portions of the operators' approved exit seating program. Figure 3.15.3.1. provides POI's with a job aid containing guidance for determining operator compliance with FAR §§ 121.585 and 135.129.

2153. USE OF PORTABLE ELECTRONIC DEVICES. POI's and principal avionics inspectors (PAI) shall review the provisions contained in FAR § 91.21 and AC 91.21-1, "Use of Portable Electronic Devices Aboard Aircraft," with their assigned operators. POI's and PAI's shall ensure that their operators have adequate procedures in place to determine whether or not portable electronic devices are acceptable for passenger use on board their aircraft. POI's shall ensure that their operators specify in their operations manuals those portable electronic devices that may not be operated on board their aircraft. Although FAR §§ 121.571, 125.327, and 135.117 do not require the following briefing information to be given, POI's should encourage their assigned operators to include information regarding the operation of portable electronic devices in their operators' pretakeoff passenger safety briefings. These briefings should include any specific restrictions that apply to passenger use of portable electronic devices. An example briefing might be the following: "Some portable electronic devices may interfere with the aircraft's communications and navigation systems. Please refrain from using any electronic device other than portable voice recorders, hearing aids, and *[the operator should add to this list of portable electronic devices, the generic identification of any device that it determines will not cause interference]*. For your safety and the safety of others, please stow all carry-on portable electronic devices during taxi, takeoff, and landing."

2154.–2160. RESERVED.

FIGURE 3.15.3.1.
EXIT SEATING PROGRAM JOB AID

This preapplication phase job aid provides guidance for determining operator compliance with FAR §§ 121.585 and 135.129, Exit Seating. The POI should complete the initial review of the program and coordinate with the regional office focal point for initial approval of the program. The region will retain a copy of the program and will advise AFS-500 of those air operators that have approved exit seating programs.

Certificate Holder Name:

Doing Business As (DBA):

Address:

Certificate Holder Certificate No:

POI Name:

Office & Phone No:

Review Completed
Signature & Date:

Regional Office Focal Point:

Office & Phone No:

Review Completed
Signature & Date:

Date Program Approved:

Date AFS-500 Notified:

Comments:

REQUIRED ATTACHMENTS: Detailed on attached pages - Complete the lines with Y (for Yes) or N (for No):

Exit Seating Procedures

Airport Information

Passenger Information Cards

Aircraft Floor Plans

EXIT SEATING PROCEDURES. Procedures should be submitted as manual sections/training program sections/bulletins, etc. as appropriate to the individual carrier. Attach all applicable sections pertinent to exit seating only.

NOTE: The POI should check for applicability and manual format and ensure that all applicable publications are revised. THE PROCEDURES MUST ADDRESS THE FOLLOWING REGULATORY REQUIREMENTS, AND MUST ADDRESS WHEN, HOW, AND BY WHOM THE ITEMS WILL BE ADDRESSED.

FIGURE 3.15.3.1.—Continued
EXIT SEATING PROGRAM JOB AID

Selection Criteria: Reference FAR §§ 121.585(b) and 135.129(b).	
Do carrier procedures address when, how, and by whom the screening and/or selection will be accomplished?	
Do carrier procedures address the following selection criteria?	
1. Does a person lack sufficient strength, dexterity or mobility in both arms and hands, and both legs to perform the following functions?	
a. Reach upward, sideways, and downward to the location of emergency exit and exit slide operating mechanisms.	
b. Grasp and push, pull, turn, or otherwise manipulate those mechanisms.	
c. Push, shove, pull, or otherwise open emergency exits.	
d. Lift out, hold, deposit on nearby seats, or maneuver over the seat backs to the next row objects the size and weight of overwing exit doors.	
e. Remove obstructions similar in size and weight of overwing exit doors.	
f. Reach the emergency exit expeditiously.	
g. Maintain balance while removing obstructions.	
h. Exit expeditiously.	
i. Stabilize an escape slide after deployment.	
j. Assist others in getting off an escape slide.	
2. Is the person less than 15 years of age or does the person lack the capacity to perform one or more of the functions listed in FAR §§ 121.585(d) or 135.129(d) without the assistance of an adult companion, parent or other relative?	
3. Does the person lack the ability to read and understand instructions related to emergency evacuation provided by the certificate holder in printed or graphic form or the ability to understand oral crew commands in the language used by the carrier?	
4. Does the person lack a sufficient visual capacity to perform one or more of the functions listed in FAR §§ 121.585(d) or 135.129(d) without the assistance of visual aids beyond contact lenses or eyeglasses?	
5. Does the person lack a sufficient aural capacity to hear and understand instructions shouted by crewmembers without the assistance beyond a hearing aid?	
6. Does the person lack the ability to adequately impart information orally to other passengers?	
7. Does the person have either of the following?	
a. A condition or responsibility, such as caring for small children, that would prevent the person from performing one or more of the functions listed in FAR §§ 121.585(d) or 135.129(d).	
b. A condition that might cause the person harm if he or she performs one or more of the listed functions.	
Seating Assignments/Verification Procedures	
Are exit seats identified for seat assignment purposes?	
Reference FAR §§ 121.585(g) and 135.129(g). Does the certificate holder have a procedure that taxi or pushback will not be allowed until at least one required crewmember has verified that no exit seat is occupied by a person the crewmember determines is likely to be unable to perform the functions listed in FAR §§ 121.585(d) and 135.129(d)?	
Are verifying crewmembers specifically identified?	
Reference FAR §§ 121.585(j)(k) and 135.129(j)(k). Does the certificate holder have procedures to honor a passenger's request to be relocated and the procedures for relocation?	

FIGURE 3.15.3.1.—Continued
EXIT SEATING PROGRAM JOB AID

Does procedure reference that a person does not need to disclose his or her reason for the request?	
Reference FAR §§ 121.585(l) and 135.129(l). Does the certificate holder have procedures to move a passenger to accommodate a relocated passenger, in the event of full booking of non-exit seats?	
Denial of Transportation/Resolving Disputes	
Reference FAR §§ 121.585(m) and 135.129(m). Does the certificate holder have procedures to deny transportation because of either or both of the following?	
1. The passenger refuses to comply with instructions.	
2. The only seat that will physically accommodate the person's handicap is an exit seat.	
Reference FAR §§ 121.585(n) and 135.129(n). Does the certificate holder have procedures for resolving disputes, including identification of the employee at the airport to whom complaints should be addressed for resolution?	
Oral Briefing Procedures	
Reference FAR §§ 121.585(i) and 135.129(i). Does the oral briefing reference the following?	
1. Passenger information cards.	
2. The selection criteria in FAR §§ 121.585(b) or 135.129(b).	
3. The functions to be performed under FAR §§ 121.585(d) or 135.129(d).	
4. A request for reseating if any of the following conditions are met:	
a. Cannot meet the selection criteria.	
b. Has a nondiscernible condition that would prevent him or her from performing the listed functions.	
c. May suffer bodily harm as the result of performing one or more of those functions.	
d. Does not wish to perform those functions.	
AIRPORT INFORMATION	
Reference FAR §§ 121.585(f) and 135.129(f). Does the certificate holder have written procedures for making determinations in regard to exit seating available for inspection by the public at all passenger loading gates and ticket counters at each airport where it conducts passenger operations?	
Is a copy of the information attached?	
Is the content complete and the method of inspection identified, such as flyers, signs, and so forth?	
PASSENGER INFORMATION CARDS	
Are copies of applicable cards attached?	
Are cards appropriate to carrier's aircraft and configurations?	
Do procedures address the use and location of cards?	
Reference §§ 121.585(d) and 135.129(d). Do the briefing cards contain the following functions?	
1. Locate the emergency exit.	
2. Recognize the emergency exit opening mechanism.	
3. Comprehend the instructions for opening the emergency exit.	
4. Operate the emergency exit.	
5. Assess whether opening the emergency exit will increase the hazards to passengers being exposed.	
6. Follow oral directions and hand signals given by a crewmember.	

FIGURE 3.15.3.1.—Continued
EXIT SEATING PROGRAM JOB AID

7. Stow or secure the emergency exit door so that it will not impede use of the exit.	
8. Assess the condition of the escape slide, activate the slide, and stabilize the slide after deployment to assist others in getting off the slide (where applicable to aircraft type).	
9. Explain how to pass expeditiously through the emergency exit.	
10. Explain how to assess, select, and follow a safe path away from the emergency exit.	
Does the briefing card contain the selection criteria listed in FAR §§ 121.585(b) or 135.129(b)?	
Does the briefing card contain a request that a passenger identify himself or herself to allow reseating if he or she meets one of the following criteria?	
1. Cannot meet the selection criteria.	
2. Has a nondiscernible condition that will prevent him or her from performing the applicable functions listed above.	
3. May suffer bodily harm as the result of performing one or more of those functions.	
4. Does not wish to perform those functions.	
5. Lacks the ability to read, speak, or understand the language, or the graphic form specified by the carrier, or lacks the ability to understand oral crew commands (in every language used by the certificate holder for the card).	
AIRCRAFT FLOOR PLANS	
Are the aircraft passenger seating floor plans submitted for each aircraft make, model, and series, and for each passenger seating configuration used by the certificate holder?	
Are exits and exit seats identified?	
List aircraft operated: Aircraft Make/Model/Series — Configurations (same or show each configuration)	

[PAGES 3-2093 THROUGH 3-2094 RESERVED]

CHAPTER 15. MANUALS, PROCEDURES, AND CHECKLISTS

SECTION 5. AIRCRAFT CHECKLISTS

2197. GENERAL. This section contains direction and guidance for principal operations inspectors (POI) for the review of aircraft checklists for Federal Aviation Regulations (FAR) Parts 121 and 135 operators. All FAR Parts 121 and 135 operators must provide aircraft checklists to their flight crewmembers. Flight crewmembers are required to use these aircraft checklists in air transportation operations. For FAR Part 121 operators, aircraft checklists must be approved by the Federal Aviation Administration (FAA), and for FAR Part 135 operators these checklists must be acceptable to the FAA (see section 1 of this chapter for definitions of acceptance and approval).

A. Definition. A checklist is a formal list used to identify, schedule, compare, or verify a group of elements or actions. A checklist is used as a visual or oral aid that enables the user to overcome the limitations of short-term human memory. Although a checklist may be published in a manual, it is designed for independent use so that the user does not have to reference a manual. Checklists are used to ensure that a particular series of specified actions or procedures are accomplished in correct sequence. Aircraft checklists, in particular, are used to verify that the correct aircraft configuration has been established in specified phases of flight.

B. Standardization. Aircraft checklists and the operator's policies for the use of checklists are one means by which operators structure and define flight crewmember roles. Research has shown that standardized procedures and effective cockpit communications are significant factors in flight safety. POI's must review the operator's policies and procedures for checklist use as an integral part of the checklist review process. POI's shall ensure that checklists and the operator's procedures for checklist use are standardized (to the extent allowed by individual aircraft differences) for all aircraft in the operator's fleet.

C. FAA Approval or Acceptance for Specific Operators. POI's and operators must understand that aircraft checklists published in airplane flight manuals (AFM) or rotorcraft flight manuals (RFM) are not approved by the Aircraft Certification Office (ACO). When a FAR Part 121 operator proposes to use an AFM checklist, the POI must review and approve that checklist for that operator. When a FAR Part 135 operator proposes to use an AFM or RFM checklist, the POI must review the checklist and determine that it is acceptable for that operator's use.

2199. CHECKLIST CONTENT. Aircraft checklists have traditionally been divided into three categories. For the purpose of this handbook, these categories are referred to as normal, nonnormal, and emergency. Operators may use other titles for these categories, such as abnormal instead of nonnormal. Operators may also further divide these categories into subcategories, such as alternate and supplemental. POI's shall use the following guidance when evaluating the content of an operator's checklists.

A. Content. POI's shall ensure that aircraft checklists are limited to action items or verification items. The aircraft checklist should not contain elaboration or explanation. POI's must ensure that the required actions and decisions for flightcrews when performing a checklist are thoroughly described in the operator's manual and training program. POI's should consider the following when evaluating aircraft checklist content:

(1) Nonnormal and emergency checklists must contain each sequential step of a procedure.

(2) A normal checklist is typically a listing of action items to be performed and verified at a particular point in flight. Normal checklist items do not necessarily represent a procedural step and may even represent completion of an entire procedure. For example, the item "Gear - Up and Locked" could indicate that the gear handle had been raised, the gear indications checked, the gear handle had been placed in the neutral position to check the up-locks, and that the handle had then been returned to the up position. Most normal procedures do not require itemization or incorporation into a checklist. For example, the procedures for making normal takeoffs and landings are not itemized in a checklist format but described in a narrative format.

B. Criticality of Checklist Items. Checklist items can be ranked in criticality according to the potential effect of the crewmember failing to perform the action. Critical items are those items which, if not correctly performed, have a direct, adverse effect on safety. Noncritical items are "housekeeping" items or systems management items, which for operating practices must be routinely accomplished during a specific phase of flight, but if omitted would have a minimal effect on safety. An item may be considered to be critical on one checklist but noncritical on another checklist. For example, a flightcrew's failure to set the flaps while accomplishing the before-takeoff checklist has had extremely adverse consequences. A flightcrew's failure to retract the flaps while performing the after-landing checklist, however, has had little effect on safety. The operator and POI shall analyze each phase of flight to identify critical items for that phase of flight and to ensure that all critical items are included on the checklist.

C. Diversion of the Flightcrew's Attention. The flightcrew's attention is diverted from other tasks when performing a checklist. Checklists must be kept as short as practical to minimize "heads-down" time and diversion of the crew's attention while performing the checklist.

(1) Each additional item that is added to a checklist increases the potential for interruption when the checklist is accomplished, diversion of the crew's attention at a critical point, and the missing of critical items. Operators and POI's must weigh the benefit of including each item on a checklist against the possible adverse effects.

(2) Items not associated with aircraft operations (such as calls to the company) shall not be placed on the checklist.

D. Aircraft Sophistication and Checklist Design. The degree of technological sophistication in the design of the aircraft directly affects checklist items. In older aircraft, the flightcrew must manually select and monitor most items. In technologically advanced aircraft, the same items are accomplished and monitored by automatic systems that relieve the flightcrew of these tasks. Checklists for technologically advanced aircraft tend to be shorter and simpler than those for older aircraft. POI's shall ensure that the operator's aircraft checklists are based on a careful task analysis of the operational requirements of the specific aircraft.

E. Fleet Standardization. POI's shall ensure that operators standardize checklist items and the sequence of items to the extent allowed by individual aircraft differences across all aircraft in the fleet. Checklists for technologically sophisticated aircraft are typically shorter and simpler than those for older aircraft. The items on checklists for technologically advanced aircraft, however, are normally present on checklists for aircraft with older technology. POI's shall require operators to evaluate the feasibility of placing common checklist items on checklists with standard titles for all aircraft (such as before-start, before-takeoff, or before-landing checklists). Items should appear in a standard sequence to the degree possible. POI's should not normally approve placing an item on a checklist that is not required for that specific aircraft solely because the item is required in other aircraft of the fleet. POI's may make exceptions, however, when the operator provides adequate justification.

2201. METHODS OF CHECKLIST DESIGN. Operators may choose from at least two accepted methods of checklist design: the "challenge-do-verify" (CDV) method and the "do-verify" (DV) method. Available evidence suggests that safety is enhanced when the operator adopts and applies a consistent checklist design policy. POI's should use the following informative guidance when reviewing the design of an operator's aircraft checklists.

A. "Challenge-Do-Verify." The CDV method consists of a crewmember making a challenge before an action is initiated, taking the action, and then verifying that the action item has been accomplished. The CDV method is most effective when one crewmember issues the challenge and the second crewmember takes the action and responds to the first crewmember, verifying that the action was taken. This method requires that the checklist be accomplished methodically, one item at a time, in an unvarying sequence. The primary advantage of the CDV method is the deliberate and systematic manner in which each action item must be accomplished. The CDV method keeps all crewmembers involved (in the loop), provides for concurrence from a second crewmember before an action is taken, and provides positive confirmation that the action was accomplished. The disadvantages of the CDV method are that it is rigid and inflexible and that crewmembers cannot accomplish different tasks at the same time.

B. "Do Verify." The DV method (or "clean-up" method) consists of the checklist being accomplished in a variable sequence without a preliminary challenge. After all of the action items on the checklist have been completed, the checklist is then read again while each item is verified. The DV method allows the flightcrew to use flow patterns from memory to accomplish a series of actions quickly and efficiently. Each individual crewmember can work independently, which helps balance the workload between crewmembers. The DV method has a higher inherent risk

of an item on the checklist being missed than does the CDV method.

C. Selection of Design Method. Both the CDV and the DV methods of checklist design are currently being successfully used for normal checklists. Traditionally, operators have preferred the DV method for normal checklists and the CDV method for nonnormal and emergency checklists. Operators have, however, successfully used the CDV method for all checklists. POI's may approve either method for normal checklists. In most circumstances nonnormal and emergency checklists are more effective when the CDV method is used. The correct accomplishment of the actions and procedures incorporated in the nonnormal and emergency checklist categories is critical and warrants a methodical approach. Since these checklists are seldom used, however, crewmembers are usually not as familiar with the procedures incorporated into these checklists as they are with the procedures in normal checklists. In addition, many nonnormal and emergency checklists do not lend themselves to developing flow patterns that crewmembers can readily recall. The CDV method also enforces crew coordination, cross-checking, and verification, all of which aid the crewmember in overcoming the adverse effects of stress. POI's should not approve or accept the DV method for nonnormal or emergency procedures unless the operator can provide substantial evidence that the method is effective for this application.

D. Mechanical or Electronic Checklists. Mechanical or electronic devices differ in format from paper, hand-held checklists, but not in the design method or use. The actions these checklists contain and their sequencing shall be consistent with the paper version (when required) available to the flightcrew. Some electronic checklists will have an ability to automatically detect the completion of an action based on switch position, system state, or both. In electronic checklists, the verification in the CDV or DV methods may be a matter of observing that the items are complete via the display method used (for example, completed items turn green). The CDV or DV methods can be applied to any type of checklist. POI's should encourage the use of such aids when operators find them effective.

E. Verification. POI's should keep in mind that all checklist designs are subject to human error. Crewmembers may omit and skip checklist items. Crewmembers may erroneously respond to a checklist at times believing that an item or task was accomplished when it was not. At times, crewmembers may see what they expect to see rather than what has actually been accomplished. Both the CDV and the DV methods are subject to such human errors. POI's must ensure that operators have developed policies for using checklists that require stringent cross-checking and verification to overcome these human limitations. These policies must be compatible with the operator's crew resource management (CRM) philosophy. POI's shall review the operator's policies as an integral part of the review process.

2203. POLICIES FOR MANAGING THE ACCOMPLISHMENT OF CHECKLISTS. POI's must ensure that the appropriate sections of the operator's manuals contain the specific crewmember responsibilities for monitoring, verifying, and managing the accomplishment of checklists. These responsibilities should appear either as policy statements or as specific directives. POI's should use the guidance that follows when evaluating an operator's policies for the accomplishment of checklists.

A. Objective of Policy Statements and Directives. The primary objective of the operator's policy statements or directives is to standardize crewmember interaction. These statements should include, but not be limited to, the following items:

- Flightcrew responsibilities for maintaining aircraft control, analyzing situations, and for requesting the appropriate checklist in nonnormal and emergency situations
- The specified crewmember responsible for initiating each checklist
- The specified time when each checklist is to be initiated
- The specified crewmember responsible for accomplishing each item on the checklist
- The specified crewmember responsible for ensuring that each checklist is completed and for reporting that completion to the crew
- Crewmember responsibilities for bringing to the attention of the pilot-in-command (PIC) and the rest of the crew any observed deviation from prescribed procedures

B. Methods for Managing Checklist Accomplishment. The following subparagraphs each contain a discussion of recommended methods an operator may use for managing checklist accomplishment. These methods are not all-inclusive and may not meet all of the operator's needs. POI's shall not interpret these methods as the only ones that are acceptable.

(1) For single-pilot aircraft, the FAA recommends that operators mount the before-takeoff checklist and the before-landing checklist on the instrument panel by means of a placard. When aircraft

characteristics allow, the operator should develop touch-verification procedures that contain a requirement that the pilot touch each control to verify it is in the correct position.

(2) For two-pilot aircraft in which only the PIC has ground steering control, the recommended method for accomplishing checklists is for the second-in-command (SIC) to read all checklists when the aircraft is in motion on the ground. The recommended method for those aircraft in which either pilot can steer on the ground is for the pilot-not-flying (PNF) to read all checklists. In all two-pilot aircraft, the PNF should read all checklists when the aircraft is airborne.

(3) For three-crewmember aircraft, the recommended method is for the SIC to read the flight engineer (FE) portion of the before-engine-start checklist, so that the PIC can observe and verify the configuration of the FE panel as the FE responds to each item on the checklist. Since the PNF is the crewmember most subject to interruptions from radio communications, it is recommended that the FE should read all normal checklists and verify that each pilot action has been taken when the aircraft is in motion. The FE should have the explicit task of verifying that critical items have been performed by the pilots, whether or not the FE has verbal responses for those items. In those nonnormal or emergency situations that involve significant activity by the FE, it is recommended that the PNF read the checklist and verify FE actions while the FE performs and responds to the items.

(4) For all aircraft, the crewmember responsible for reading the checklist should be responsible for ensuring that the checklist is completed systematically and expeditiously. This crewmember should be responsible for managing interruptions, cross-checking controls and indicators to ensure that the required actions have been accomplished, and for reporting that the checklist has been completed.

(5) The pilot-flying (PF) should not be distracted from controlling the aircraft to perform a checklist item that another crewmember can accomplish. The PF should activate only those switches or controls (other than the manual or automatic flight controls, throttles, and nosewheel steering) that are not within practical reach of another crewmember. Only one pilot should be "heads down" at any time.

(6) In the prestart phase, flight guidance and navigation checklist items have proven to be critical items. A response should be required from both pilots (and FE, if applicable) when the same setting is required for more than one device (such as computers, flight instruments, and altimeters). Inertial platform alignment and computer programming should be accomplished by one crewmember and independently confirmed by another crewmember. As many of these checklist items as possible should be accomplished and verified before the aircraft is moved.

(7) In the taxi and pretakeoff phases, aircraft configuration (such as flaps, trim, and speedbrakes) and flight guidance items (such as heading, flight-director, altitude select panel settings, and airspeed bugs) have proven to be critical. All flight crewmembers should confirm these items, and at least two crewmembers should respond to applicable checklist items.

(8) On approach, flight guidance checklist items have proven to be critical items. At least two crewmembers should confirm and respond to these items. A response should be required from each pilot when the same setting is required on two separate devices (such as computers, flight instruments, or altimeters).

NOTE: One operator was able to reduce altitude deviations from an average of two per week to one per quarter by using stringent procedures for setting and verifying the altitude alerter.

(9) All checklist items that are critical in the before-landing phase vary with the type of airplane involved. In the operation of small airplanes, the landing gear has proven to be a critical checklist item, and both pilots should confirm and respond to this item. Although the landing gear and flaps are critical items for large, transport category airplanes, the multiple warning devices and systems that are associated with these systems make the need for a response and confirmation by both pilots less critical.

(10) All checklists, except the after-takeoff and after-landing checklists, should be accomplished by one crewmember reading the checklist items and a second crewmember confirming and responding to each item. POI's shall ensure that critical items on the before-takeoff and before-landing checklists are confirmed and responded to by at least two crewmembers.

(11) All checklists must be designed so that the flightcrew can maintain an adequate visual scan and monitor air traffic control (ATC) communications while simultaneously controlling the aircraft. The recommended method is for the operator to group the systems management checklist items after the configuration, thrust, and flight guidance items for each phase of flight. When systems management checklist items must be accomplished in a high workload environment, it is recommended that they be accomplished

by a single crewmember. Usually the after-takeoff and after-landing checklists items can be accomplished silently as these items have not proven to be critical. POI's should carefully evaluate the operator's overall operation and experience before approving other checklists in which a single crewmember may accomplish a checklist.

(12) Operators should direct crewmembers to refrain from accomplishing action items assigned to other crewmembers. Crewmembers should be directed that when they observe that another crewmember is not taking or has not taken a required action they must inform the crewmember, the PIC, or the whole crew, as appropriate.

(13) Checklists should not be depended on to initiate changes in aircraft configuration. Operators should key aircraft configuration changes to specific operational events. For example, the operator may direct the landing gear to be extended at glideslope intercept. For any adjustment of thrust, or configuration, a command from the PF and an acknowledgement from the crewmember taking the action is required.

(14) Flight crewmembers frequently cannot complete a checklist when initiated either because of an interruption or because an item on the checklist has not yet been accomplished. POI's shall ensure that each operator has developed policies for the management of these situations. For short delays, the recommended policy is for the flightcrew to hold the checklist until the interruption is over and the item can be completed. When the checklist item is completed, the challenge should be repeated, the proper response given, and the checklist continued. POI's shall not accept policies that allow flightcrews to skip checklist items that have not been completed and then to depend on memory to accomplish the item later. When a mechanical or electronic device allows checklist items to be accomplished in a random sequence, the POI may allow policies appropriate to the system used.

(15) WITHDRAWN—CHG 10.

C. Checklist Interruptions. Operators must establish procedures to ensure that the correct checklist sequence is reestablished when unusual events interrupt the normal sequence of a flight. For example, crewmember actions during normal sequences of flights are interrupted when long delays are encountered on taxi-out or when crewmembers vacate the flight deck.

(1) Vacating Flight Deck with Visitors in Cockpit. Operators must establish additional checklist management procedures for checklist interruptions that occur when any flight crewmember who is assigned to a flight deck duty station vacates the cockpit to perform other duties, leaving persons who are occupying cockpit observer seats or who visit the cockpit during such absence with unsupervised access to unmanned flight deck duty stations. If any checklist interruption of this kind occurs and any person, other than those specified in FAR §§ 121.547(a), 121.583(a)(1) through (3) or 135.85(a) and (f), has unsupervised access to an unmanned flight deck duty station, then each checklist item in all of the checklists prior to engine start must be reaccomplished.

(2) POI Responsibilities. FAR Part 121 POI's shall ensure that their assigned certificate holders conform to the policies described in this subparagraph. FAR Part 135 POI's shall encourage their assigned certificate holders to conform to these policies.

NOTE: The following policies apply when interruptions of checklists occur before engine start; are caused by the vacating of an assigned flight deck duty station by one or more flight crewmembers to perform duties outside the flight deck; and any person, other than those specified in FAR §§ 121.547(a), 121.583(a)(1) through (3) or 135.85(a) and (f), occupies a cockpit observer seat or has access to the cockpit during the flight crewmember's absence.

(3) Verification of Items Accomplished. The flightcrew must verify the accomplishment of all items on checklists that have been accomplished up to the point where the current checklist was interrupted.

(a) Minimum Requirement. As each checklist item is reaccomplished, the minimum that is required is a verification that switches, control handles, knobs, or levers are in the positions prescribed and that the associated indicator lights and instrument readings confirm the proper positioning of the applicable switches, control handles, knobs, or levers.

(b) Additional Requirements.

1. If the verification check reveals that any switch, control handle, knob, or lever is not in the position prescribed, then the full procedure, including any associated checks for the particular checklist item(s), must be reaccomplished.

2. If the indicator lights or instrument readings associated with the proper positioning of particular switches, control handles, knobs, or levers are not in agreement with the prescribed positions of these control means and reaccomplishment of the full procedure, including any associated checks for the particular checklist item(s), does not correct the disagreement, then the flightcrew must log the discrepancy in the aircraft maintenance log. The operator

must either correct this discrepancy before the next flight or, if permitted, defer correction in accordance with the certificate holder's approved minimum equipment list (MEL) procedures.

2205. DEVELOPMENT AND SEQUENCING OF CHECKLIST ITEMS. POI's must ensure that checklists are developed from a careful task analysis and are consistent with the procedures section of the operator's flight manual. Phase checklist items must be in an appropriate and logical sequence. When a checklist represents an abbreviated procedure, that checklist must follow the procedural sequence. POI's should use the following additional guidelines concerning individual topics of checklist design.

A. Operators should standardize the sequence of checklist items as much as possible across aircraft types (see subparagraphs 2199D and E).

B. When the operator has a choice as to where an item should be placed on a checklist, it should be placed at a point where the crew workload is lowest.

C. Operators should keep checklists as short as possible in order to minimize interruptions. When an operator is using an electronic checklist with the ability to automatically detect the completion of an action, the POI shall encourage the use of that ability to the maximum extent possible.

(1) Operators should sequence checklist items to minimize interruptions of checklist accomplishment. For example, sequencing the "INS NAV MODE" as the first item on the engine-start checklist may allow the flightcrew to call for and complete the before-engine-start checklist at a convenient time even though INS alignment is not complete.

(2) Two short checklists may be preferable to a single long one. Operators may place a line or otherwise mark a checklist where the checklist can be held until a specific event occurs. This practice is acceptable because in essence, it creates two separate checklists.

D. Operators must include required preflight tests on checklists, but should design checklists to preclude the unnecessary testing of systems.

(1) Warning systems with built-in test and automatic monitor circuits do not need to be checked or included on checklists unless required by the AFM.

(2) Many test switches in the cockpit are designed for use by maintenance personnel. Operators should not require flight crewmembers to perform these tests as a normal procedure.

(3) With concurrence of the aircraft evaluation group (AEG), POI's may approve the operator grouping required functional checks on a specific checklist which is performed before the first flight of the day (or at some other logical interval) and not repeated on subsequent flights.

E. Operators must clearly identify decision points and indicate the correct alternative action or alternative sequence of actions to be taken after each decision point. If the effect of adverse weather requires an alternate action, the operator should design the checklist to account for that alternate action. For example, if the autothrottles are normally engaged for takeoff except when engine anti-ice is being used, the checklist should contain a requirement that the autothrottles cannot be engaged with the engine anti-ice on.

2207. IMMEDIATE ACTION ITEMS. Immediate action items are those items accomplished from memory by crewmembers in emergency situations before the checklist is called for and read.

A. A flightcrew's failure to correctly accomplish all immediate action items can result in a threat to continued safe flight. For example, should a flightcrew fail to close the tank valve during an engine fire procedure, leaking fuel in the engine pylon may be ignited. In such cases, the first items on the corresponding checklist must be a verification that each immediate action item has been accomplished.

B. In some cases, an immediate action procedure may not be incorporated in a checklist. For example, there is no point in verifying that each item of an aborted takeoff procedure has been accomplished after the aircraft has been brought to a stop. In most cases, however, there should be a "follow-on" or "clean-up" checklist to be accomplished after the situation has been brought under control.

C. Immediate actions may be stated as policies rather than as checklist items when appropriate. An example of an immediate action item that can be stated as a policy rather than as a checklist item is the following statement: "All flight crewmembers shall immediately don O_2 masks and report to the captain on interphone in the event of loss of cabin pressure." In this example, the loss-of-cabin-pressure checklist would contain subsequent items based on the assumption that the flightcrew is on oxygen and has established interphone contact.

2209. CHECKLIST TERMINOLOGY. POI's should ensure that the operator's aircraft checklists contain terminology that is tightly controlled to ensure clarity and common understanding. The following rec-

ommendations should be considered by POI's when reviewing checklists.

A. The challenges and responses on the checklist should be consistent with the labeling on the switches and controls in the cockpit.

B. Terms such as "tested," "checked," and "set" are acceptable terms only when they are clearly defined and consistently used.

C. Operators should have a consistent policy concerning responses to items with variable settings. "As required" may be printed on the checklist, but should not be an authorized response. A response that gives the actual setting is normally appropriate. Items that require variable responses should be carefully evaluated. Such items may not actually be required on the checklist or may be more appropriately included in the system management portion of a checklist.

D. Responses to checklist items concerning liquid or gas quantities should be made in terms of the actual quantities on board compared to the specific quantity required, for example: "10,000 pounds required, 10,400 on board." When specific quantities are required, a response of "checked" is not acceptable. A response of "checked" is acceptable when a range of quantity is permitted and the range is marked on an indicator, such as a green arc on an oil quantity gauge.

E. Excess verbiage on checklists should be discouraged. For example, a checklist item of "Reduce airspeed to 130 KIAS for best glide" can be abbreviated as "BEST GLIDE - 130 KIAS."

F. Ambiguous verbiage on checklists is not acceptable. For example, "takeoff power" can mean either to advance the power or to retard the power.

2211. AIRCRAFT DIFFERENCES. POI's shall ensure that operators account in the aircraft checklists for differences in various series of aircraft or in installed equipment. When there are only a few minor differences, this may be accomplished by using symbols to designate those checklist items that apply to only one series of airplanes or that apply only when the equipment is installed. When there are a significant number of differences, operators should prepare separate checklists for each series of aircraft. Policies and procedures should be established to account for differences in checklist responses when operations are conducted with equipment removed or inoperative, in accordance with MEL's and configuration deviation lists (CDL).

2213. SEQUENCING NORMAL CHECKLISTS AND OTHER CHECKLISTS. Normal checklist items may be incorporated in nonnormal or emergency checklists to simplify cockpit management. An acceptable alternative method is to require both the normal and nonnormal or emergency checklists to be accomplished in a specified sequence. This method has the advantage of allowing the normal checklist to be requested and accomplished at the time that it would normally be accomplished. Checklists should be designed so that two checklists are not in progress simultaneously. The method may depend on the degree of sophistication of the airplane involved. In technologically advanced aircraft with short, simple checklists, it is usually preferable to keep the normal and the nonnormal checklists separate. Some nonnormal checklist actions may be deferred until initiation of the appropriate normal checklist. In airplanes with electronic checklists, checklists may be combined based on the priority of any one action, and/or the deferred nonnormal checklist items may be automatically inserted in the appropriate normal checklist. In older airplanes, however, it may be necessary to add the normal checklist items to the nonnormal or emergency checklist simply to keep the checklist manageable.

2215. CHECKLIST FORMAT. POI's shall ensure that operators present checklists to flightcrews in a practical and usable format. POI's should use the following guidance when evaluating aircraft checklists for proper format.

A. Paper checklists should be protected either by plastic lamination or by being printed on heavy, folded pasteboard stock.

B. Nonnormal, alternate, and emergency checklists must be in a format that allows crewmembers to quickly and accurately find the correct procedure while the crewmember is under stress. To expedite the referencing of these checklists, a tabbed manual or other quick reference format is recommended. When a paper checklist is required on the airplane, the methods used in an electronic checklist and the associated paper checklist for referencing a particular checklist shall be sufficiently similar to minimize flightcrew confusion or inappropriate flightcrew response. The methods for accessing electronic checklists may determine the format used to reference checklists in the paper version.

C. For single-pilot aircraft, the before-takeoff checklist and before-landing checklist can be appropriately presented as placards on the instrument panel.

D. The type size and contrast used on a checklist is a compromise. A large type size is preferred for legibility. A small type size is preferred to keep the number of checklist pages to a minimum, which then

further ease the locating of a specific checklist. The legibility of printed material depends on the size of the letters, the spacing between letters, and the type of font used. The following is offered as a suggestion to POI's for what to consider in evaluating the legibility of checklists. This guidance must not be interpreted as being the only acceptable print size and contrast that can be used for checklists:

- Checklist headings or titles—12 point type, all caps, boldface, and a plain (sans serif) font
- Checklist text (challenge and response) and notes—10 point type, boldface, and a plain (sans serif) font
- Contrast for headings or titles—either black print on white or reversed for emphasis
- Contrast for text—black print on white
- Colored borders for ease of identification—green for normal checklists, yellow for nonnormal checklists, and red for emergency checklists

NOTE: On airplanes with electronic checklists, these selections should be consistent with the display and symbology standards used by that system.

2216.–2226. RESERVED.

[PAGES 3-2117 THROUGH 3-2122 RESERVED]

VOLUME 4. TABLE OF CONTENTS

AIRCRAFT EQUIPMENT AND OPERATIONAL AUTHORIZATIONS

Page

CHAPTER 1. AIR NAVIGATION AND COMMUNICATIONS

Section 1. General Navigation Concepts, Policies, and Guidance

1. General 4-1
3. The Objective of Air Navigation 4-1
5. General Concepts 4-1
7. The Concept of an ATC Clearance 4-2
9. Concept of Navigation Performance 4-2
11. Concept of the Degree of Accuracy Required for Control of Air Traffic 4-5
13. Concept of Operational Service Volume 4-5
15. Categories of Navigational Operations 4-5
17. U.S. Public Law, International Agreements, and Standards Related to Air Navigation 4-9
19. Relationship Between the FAR, ICAO, SARP's, and National Regulations 4-10
21. Relationship of U.S. Operational FAR to Air Navigation 4-11
23. FAR Specifying Air Navigational Equipment Requirements 4-12
25. Protection of Persons and Property 4-16
26.-30. Reserved 4-16

Section 2. Air Navigation Approval Requirements

31. General 4-23
33. Inspector-Subject Familiarization and Approval Requirements 4-23
35. Determining the Class of Navigation 4-23
37. Special Operations 4-24
39. Airworthiness of Navigation Equipment 4-24
41. Training Programs and Manuals 4-25
43. Minimum Equipment Lists 4-25
45. Navigation Practices, Techniques, and Procedures 4-25
47. Validation Testing Requirements 4-25
49. Guidance for Use of Aircraft Equipment Suffix /G 4-26
50.-70. Reserved 4-26

Section 3. Class I Navigation

71. General 4-33
73. VFR Class I Navigation 4-33
75. Types of VFR Class I Navigation 4-34
77. VFR Class I Navigation Approvals 4-34
79. Part 135 Pilotage VFR Class I Navigation Standard Practices (TBD)* 4-35
81. Part 135 Station-Referenced VFR Class I Navigation Standard Practices (TBD) 4-35
83. Part 121 Station-Referenced VFR Class I Navigation Standard Practices (TBD) 4-35
85. IFR Class I Navigation 4-35
87. Types of IFR Class I Navigation 4-35
89. IFR Class I Navigation Approvals 4-36
91. Standard ICAO NAVAID IFR Class I Navigation Standard Practices (TBD) 4-37
93. Area Navigation Systems IFR Class I Navigation Standard Practices (TBD) 4-37
95. Part 135 Single Pilot IFR Class I Navigation Standard Practices (TBD) 4-37
97. Part 135 Helicopter IFR Class I Navigation Standard Practices (TBD) 4-37

**(TBD)=TO BE DEVELOPED*

VOLUME 4. TABLE OF CONTENTS—Continued

Page

98.-110. Reserved 4-37

Section 4. Class II Navigation

111. General 4-43
113. VFR Class II Navigation 4-43
115. Part 135 Airplane VFR Class II Navigation Standard Practices (TBD) 4-43
117. Helicopter VFR Class II Navigation Standard Practices (TBD) 4-43
119. IFR Class II Navigation 4-43
121. Types of IFR Class II Navigation 4-43
123. IFR Class II Navigation Approvals 4-46
125. Class II Navigation Using ICAO Standard NAVAID'S Supplemented by Dead Reckoning Standard Practices (TBD) 4-47
127. Pilot-Operated Electronic Long-Range Navigation Systems Standard Practices (TBD) 4-47
129. Flight Navigator Standard Practices (TBD) 4-47
131. Confirmation of System Accuracy and Reliability (TBD) 4-47
132.-140. Reserved 4-47

Section 5. Special Navigation Areas of Operation

141. General 4-54
143. Areas Requiring High Levels of Long-Range Navigation Performance 4-54
145. North Atlantic Minimum Navigation Performance Specifications Airspace (NAT/MNPS) 4-54
147. Canadian Minimum Navigation Performance Specifications Airspace 4-57
149. Operations in Airspace Where Composite Separation is Applied by ATC 4-57
151. Areas of Magnetic Unreliability 4-60
153. Areas With Significant Communications and/or Air Traffic Control Difficulties 4-63
155. Evaluation Criteria for Areas with Communications and ATC Difficulties 4-63
157. Operations in Sensitive International Areas 4-64
159. South Atlantic and Gulf of Mexico Control Areas (Atlantic and Gulf Routes) 4-64
161. Special Areas Where Redundant Long-Range Navigation Systems are Usually Not Required 4-65
163. Air Transportation Operations Within the Former Soviet Union 4-66
164.-174. Reserved 4-69

Section 6. General Communications Concepts, Policies, and Guidance

175. General 4-81
177. Very High Frequency (VHF)/High Frequency (HF) Communications (TBD) 4-81
179. Communications Equipment Requirements for Over-Water Operations 4-81
181. Data Link (TBD) 4-82
183. Automatic Dependent Surveillance (TBD) 4-82
185. Satellite Voice (TBD) 4-82
186.-400. Reserved 4-82

CHAPTER 2. ALL-WEATHER TERMINAL AREA OPERATIONS

Section 1. Introduction to and Evolution of All-Weather Terminal Area Operations

401. General Background 4-121
403. Evolution of AWTA Operations 4-121
405. Current Category I (CAT I) Operations 4-122
407. Evolution of Current Category II (CAT II) Operations 4-123
409. Evolution of Current Category III (CAT III) Operations 4-124
411. Future Reductions to Landing Minimums 4-125

VOLUME 4. TABLE OF CONTENTS—Continued

		Page
413.	Authority and Responsibility for Approval of AWTA Operations	4-125
414.-440.	Reserved	4-126
Section 2.	General Concepts for All-Weather Terminal Area Approach Procedures	
441.	General	4-134
443.	Basic Types of AWTA Approach and Landing Operations	4-134
445.	Categories of Instrument Approach Procedures	4-134
447.	Operating Minimums	4-135
449.	Controlling Minimum Concept	4-135
451.	Look-See Approaches	4-136
453.	Instrument Approach Procedures	4-136
455.	U.S. Standard Instrument Approach Procedures (SIAP)	4-137
457.	Other Instrument Approach Procedures (IAP)	4-137
459.	Special Approach and Landing Operations	4-138
460.-470.	Reserved	4-140
Section 3.	Factors Affecting All-Weather Terminal Area Operations	
471.	General Factors Affecting Operating Minimums	4-145
473.	Precision of Flightpath Control	4-145
475.	Obstacle Clearance	4-145
477.	Function of External Visual References	4-145
479.	Maximum Sink Rates	4-146
481.	Cockpit Design	4-146
483.	Minimum Instrument Flight Altitudes	4-147
485.	Minimum Visibility, Runway Visibility Values, and/or Runway Visual Range	4-148
487.	Safety During Go-Arounds	4-148
489.	Concept of Decision Height (DH)	4-149
491.	Concept of Minimum Descent Altitude and Missed Approach Point (MDA/MAP)	4-150
493.	Concept of Circling Maneuvers	4-151
495.	Concept of Runway Visual Range	4-151
497.	General Factors Affecting Seeing Conditions	4-152
499.	Weather Conditions/Fog Structure	4-152
501.	Visual Aids and Runway Environment	4-153
503.	Effects of Aircraft/Cockpit Design on Seeing Conditions	4-154
505.	Eye Reference Position	4-155
507.	Threshold Crossing Height (TCH) Concept	4-155
509.	Visual Illusions	4-156
511.	Stabilized Approach Concept	4-158
513.	Air Traffic Control Concepts	4-158
515.	Airport Facilities and Services	4-160
516.-530.	Reserved	4-161
Section 4.	Category I Operations	
531.	General	4-173
533.	Definition of CAT I Approach and Landing Operations	4-173
535.	Generic CAT I Operational Concepts	4-173
537.	Fundamental Operating Principles	4-174
539.	Cat I Operating Minimums for Public Instrument Approaches	4-174
541.	Basic Air Carrier Operating Minimums	4-175
543.	Standard Air Carrier Operating Minimums	4-176
545.	Authorized CAT I Instrument Approach Procedures	4-177
547.	Basic IFR and Standard CAT I Operating Practices	4-177
549.	The Standard AWTA Operating Procedure	4-180

VOLUME 4. TABLE OF CONTENTS—Continued

		Page
551.	Evaluation and Approval of CAT I Operations	4-181
553.	CAT I Airport, Runway, and Ground-Based Equipment Requirements	4-183
555.	CAT I Operations Using Basic Air Carrier Operating Minimums	4-184
557.	CAT I Operations Using Standard Air Carrier Operating Minimums	4-187
559.	Use of Standard Operating Minimums in Turbojet, Turbofan, and Propfan Airplanes	4-188
561.	Special CAT I Operations	4-190
563.	Approval of CAT I All-Weather Operations	4-192
564.-580.	Reserved	4-192
Section 5.	Category II Operations	
581.	General	4-211
583.	CAT II Operational Concepts	4-212
585.	Standard CAT II Operations	4-213
587.	Special CAT II Operations	4-215
589.	CAT II Terminal Instrument Approach Procedures (U.S. Airports)	4-216
591.	Foreign CAT II Instrument Approach Procedures	4-217
593.	Foreign Flag CAT II Operations in the U.S.	4-217
595.	CAT II Evaluation and Approval Process	4-218
596.-610.	Reserved	4-219
Section 6.	Category III Operations	
611.	General	4-241
613.	CAT III Operational Concepts	4-242
615.	Establishing CAT III Operating Minimums	4-243
617.	Functional Requirements for Visual Reference	4-245
619.	Decision Region	4-245
621.	Radio Altimeter and Pre-Threshold Terrain	4-246
623.	Types of ILS Systems	4-247
625.	Approval of CAT III Operating Minimums	4-248
627.	Standard CAT III Operations	4-250
629.	Special CAT III Operations	4-252
631.	CAT III Terminal Instrument Approach Procedures (U.S.)	4-252
633.	Foreign CAT III Instrument Approach Procedures	4-252
635.	Foreign Flag CAT III Operations in the U.S.	4-253
637.	CAT III Evaluation and Approval Process	4-255
639.	Operations Specifications for CAT III Operations	4-260
640.-644.	Reserved	4-260
Section 7.	Lower-Than-Standard Takeoff Minimums	
645.	General	4-281
647.	Training	4-281
648.-658.	Reserved	4-281
Section 8.	MLS, GPS, and Loran-C Systems (TBD)	
659.-670.	Reserved	4-299
Section 9.	Authorization for the Use of Special Terminal Instrument Procedures	
671.	General	4-321
673.	Background	4-321
675.	Authority and Responsibility for Special Terminal Instrument Procedures	4-321
677.	Special Procedures	4-322
679.	POI Authorization for Operator Use of a Special Terminal Instrument Procedure	4-322
681.	Practices and Policies for IFR Departure Procedures	4-323

VOLUME 4. TABLE OF CONTENTS—Continued

		Page
683.	Flight Procedures Standards Waiver to Special Terminal Instrument Procedures	4-323
685.	Provisional Authorizations	4-323
687.	Special IFR Departure Procedures for Departure from Airports Without Instrument Approach Procedures (Part 135 Operators Only)	4-324
689.	NOTAM's	4-324
690.-900.	Reserved	4-324

CHAPTER 3. AIRPLANE PERFORMANCE AND AIRPORT DATA

Section 1. Airplane Performance Computation Rules

901.	General	4-331
903.	Overview of Airplane Performance Rules	4-331
905.	Large Airplane Certification	4-333
907.	Determining Applicable Operating Rules	4-333
909.	Small Airplane Certification	4-333
911.	V Speed Definitions	4-335
913.	Runway Length	4-336
915.	Runway Limit Weight—Transport and Commuter Categories	4-337
917.	Takeoff Conditions	4-337
919.	Wind Conditions During Takeoffs and Landings	4-338
921.	Water and Contamination of Runways	4-339
923.	Tire Speed and Brake Limits	4-339
925.	Takeoff Climb Limit Weight	4-339
927.	Takeoff Weights Limited by Obstacles	4-339
929.	En Route Performance Limits	4-340
931.	Approach and Landing Climb Limits	4-342
933.	Landing Distance	4-342
934.-946.	Reserved	4-343

Section 2. Airplane Performance Rules

947.	General	4-365
949.	Large, Reciprocating-Powered, Transport Category Airplane Performance	4-365
951.	Large, Turbine-Powered Transport Category Airplane Performance	4-369
953.	Performance Rules for Large Nontransport Airplanes	4-377
955.	Rules for Release of Commuter Category Airplanes	4-379
957.	Small Transport Category Airplanes Operated Under Part 135	4-381
959.	Small, Nontransport Category Airplanes with 10 to 19 Passenger Seats and Up to 12,500 MTOW	4-381
961.	Rules for Release of SFAR 41.1(b) Airplanes	4-383
963.	Rules for Release of Small, Normal Category Airplanes with Less than 10 Seats	4-383
964.-974.	Reserved	4-385

Section 3. Approval of Performance Data Sections of CFM's

975.	General	4-409
977.	Manual Computation System From AFM Data	4-410
979.	Tabulated Data Method	4-410
981.	Simplified Data Method	4-410
983.	Real Time Method	4-411
985.	Evaluation of an Operator's System	4-411
986.-996.	Reserved	4-412

Section 4. Airport Data Acquisition Systems

997.	General	4-435

VOLUME 4. TABLE OF CONTENTS—Continued

Page

999. Obstacle Data Sources 4-435
1001. Approval of Data Acquisition Systems 4-436
1002.-1012. Reserved 4-437

Section 5. Selected Practices

1013. General 4-459
1015. Non-Transport Category Airplane Operating Limitations 4-459
1017. Approval of Drift-Down and Fuel-Dumping Procedures 4-459
1019. En Route Operations with Landing Gear Extended 4-460
1021. High-Speed Taxi Starts with One Powerplant Inoperative 4-460
1023. Approval of Unpaved Runways for Turbojet Operations 4-460
1025. Air Carrier Winter Operations 4-460
1027. Deviation for Obstacle Clearance Data for Certain Turbojet Airplanes in Part 135 Operations 4-461
1028.-1064. Reserved 4-462

CHAPTER 4. MINIMUM EQUIPMENT LISTS (MEL) AND CONFIGURATION DEVIATION LISTS (CDL)

Section 1. General

1065. Background 4-561
1067. General 4-561
1069. Applicability 4-561
1071. POI's Responsibilities 4-561
1073. Definitions 4-561
1075. Purpose of MEL 4-562
1077. Items Listed on the MEL 4-562
1079. Timely Repair of Items that are Inoperative 4-563
1081. Recordkeeping 4-563
1083. Multiple Items that are Inoperative 4-563
1085. Fleet Approval 4-563
1087. MEL Revisions 4-563
1089. Access to MEL 4-563
1091. Conflict with Other FAA-Approved Documents 4-563
1092.-1104. Reserved 4-563

Section 2. Master Minimum Equipment Lists (MMEL) Development and Approval Process

1105. General .....
1107. Proposed Master Minimum Equipment List (PMMEL) 4-577
1109. Initial MMEL Approval Process 4-577
1111. MMEL Revision Procedures 4-577
1113. Lead Airline Concept 4-578
1114.-1122. Reserved 4-578

Section 3. MEL Approval Process

1123. General 4-589
1125. MEL Acceptability 4-589
1127. Initial Phase of MEL Approval 4-589
1129. Final Phase of MEL Approval Process 4-590
1131. Terms and Conditions of Relief 4-594
1133. Demonstration Phase 4-595
1135. POI Approval of the Operator's MEL 4-595
1137. Program Tracking and Reporting Subsystem (PTRS) Input 4-595

VOLUME 4. TABLE OF CONTENTS—Continued

Page

1139. Final Step 4-595
1140.-1148. Reserved 4-595

Section 4. MEL Use in Service

1149. General 4-609
1151. Revision Procedures 4-609
1153. Tracking of Revision Status 4-610
1155. Availability of MEL for Flight Crewmembers 4-610
1157. Method of Authorizing Flight Crewmember Access to MEL 4-610
1159. Discrepancies Discovered During Flight 4-611
1161. Documentation of Discrepancies 4-611
1163. Conflict with Airworthiness Directives 4-611
1165. Interrelationships of Inoperative Components 4-611
1167. Repair Categories 4-611
1169. Program Tracking and Reporting Subsystem (PTRS) Input 4-612
1170.-1180 Reserved 4-612

Section 5. Master Minimum Equipment List Subsystem (MMEL Subsystem)

1181. Background 4-623
1183. General 4-623
1185. System Capability 4-623
1187. System Access Instructions and Support 4-623
1189. Automatic Notification 4-623
1191. MEL Status Reports 4-623
1193. Global Changes 4-623
1195. Public Access to MMEL 4-623
1196.-1206. Reserved 4-624

Section 6. Configuration Deviation Lists

1207. General 4-637
1209. Development and Approval of a CDL 4-637
1211. Use of the CDL 4-637
1213. Operational Control 4-637
1214.-1334. Reserved 4-637

CHAPTER 5. AIR AMBULANCE OPERATIONS

Section 1. Background and Definitions

1335. Introduction 4-759
1337. Operators Requiring Air Ambulance Operations Specifications Paragraphs 4-759
1339. Definitions 4-760
1341. Overview of Helicopter Air Ambulance Services 4-760
1343. Overview of Airplane Air Ambulance Services 4-761
1345. FAA Policy Regarding "Compensation or Hire" Considerations for Charitable Flights or Life Flights 4-762
1346.-1354. Reserved 4-762

Section 2. Authorizations for FAR Part 135 Air Ambulance Services

1355. General 4-775
1357. Existing Operators Initiating Air Ambulance Operations 4-775
1358.-1368. Reserved 4-776

VOLUME 4. TABLE OF CONTENTS—Continued

Page

Section 3. Air Ambulance Service Operational Procedures

1369. General 4-789
1371. Administrative Procedures 4-789
1373. Pre-flight Planning 4-790
1375. Inflight Procedures 4-790
1377. Emergency Procedures 4-791
1379. Servicing of Aircraft With Patients On Board 4-791
1381. Postflight Procedures 4-792
1382.-1392. Reserved 4-792

Section 4. Air Ambulance Service Training Programs

1393. General 4-805
1395. Helicopter Training Programs 4-805
1397. Airplane Training Programs 4-805
1399. Medical Personnel and Flightcrew Coordination Training 4-806
1400.-1460. Reserved 4-806

CHAPTER 6. AIRPLANE AUTHORIZATIONS AND LIMITATIONS

Section 1. Selected Practices

1461. General 4-869
1463. Airborne Thunderstorm Detection Equipment Requirements for Part 135 Operations . 4-869
1465. Passenger Occupancy of a Pilot Seat 4-869
1466.-1532. Reserved 4-870

CHAPTER 7. ROTORCRAFT AUTHORIZATIONS AND LIMITATIONS

Section 1. IFR Offshore Operations

1533. Introduction 4-941
1535. General 4-941
1537. Application Process for Helicopter IFR Offshore Operations 4-941
1539. Specific Operator Requirements and Procedures 4-941
1541. Geographic Coordination 4-942
1542.-1552. Reserved 4-942

Section 2. Helicopter En Route Descent Areas (HEDA)

1553. General 4-949
1555. Request for Approval of HEDA 4-949
1557. District Office Approval Procedures 4-949
1559. HEDA Pictorial and Plan View Criteria 4-950
1560.-1570. Reserved 4-950

Section 3. Offshore Instrument Approach Procedures

1571. General 4-961
1573. Approach Approval Procedures 4-961
1574.-1682. Reserved 4-961

CHAPTER 8. GROUND DEICING/ANTI-ICING PROGRAMS

Section 1. General

1683. Background 4-1061
1685. Rule 4-1061
1687. FAR Part 121 Ground Deicing/Anti-Icing 4-1061
1689. FAR Part 121 Definitions 4-1062

VOLUME 4. TABLE OF CONTENTS—Continued

Page

1691. FAR Part 121 Ground Deicing/Anti-Icing Program 4-1062
1693. Management Plan 4-1062
1695. Holdover Timetables and the Procedures for Their Use 4-1062
1697. FAR Part 135 Ground Deicing/Anti-Icing Training and Checking Rule 4-1063
1699. Pretakeoff Contamination Check 4-1064
1701. Applicability of the Part 135 Ground Deicing Rule 4-1064
1703. Training Requirements of the FAR Part 135 Ground Deicing Rule 4-1064
1705. Sources of Information 4-1065
1706.-1738. Reserved 4-1066

Section 2. Approval of FAR Parts 121 and 135 Procedures

1739. General 4-1091
1741. Approval Process 4-1091
1743. Phase One—Initial Discussion 4-1092
1745. Phase Two—Initial Operator Submission 4-1092
1747. Phase Three—Preliminary Approval 4-1093
1749. Phase Four—Validation Testing 4-1094
1751. Phase Five—Final Approval 4-1095
1753. OpSpecs Issuance Instructions 4-1095
1754.-1774. Reserved 4-1095

CHAPTER 9. LOW VISIBILITY TAXI OPERATIONS

Section 1. Background and Responsibilities

1775. General 4-1141
1777. Background 4-1141
1779. Applicability 4-1141
1781. Air Carrier Responsibilities 4-1141
1783. FAA Responsibilities 4-1141
1784.-1794. Reserved 4-1142

Section 2. Implementation and Surveillance

1795. General 4-1153
1797. Implementation 4-1153
1799. Surveillance 4-1153
1800.-1810. Reserved 4-1153

CHAPTER 1. AIR NAVIGATION AND COMMUNICATIONS

SECTION 2. AIR NAVIGATION APPROVAL REQUIREMENTS

31. GENERAL. This section contains direction and guidance to be used by inspectors for approving operator requests for air navigation operations. Inspectors approve these operations by issuing appropriate operations specifications paragraphs, such as B36. Except for Class I navigation, the approval process normally requires validation testing. The five phases of the validation test process are described in volume 3, chapter 9, section 2. Volume 3, chapter 9, section 8, contains a detailed discussion of validation testing requirements. This section provides additional guidance specifically related to air navigation requirements.

33. INSPECTOR—SUBJECT FAMILIARIZATION AND APPROVAL REQUIREMENTS. Once an operator has requested approval for air navigation operations, it is essential that inspectors fully understand the concepts, national policies, standard practices, direction, and guidance related to the area of proposed operations. Section 1 and subsequent sections of this chapter contain much of this information and additional references for more detailed information and guidance. In addition, Federal Aviation Administration (FAA) navigation technical specialists are available to assist principal inspectors in understanding, evaluating and approving air navigation operations. When processing operator requests for air navigation operations (especially for new approvals), principal inspectors should request guidance from a navigation specialist at one of the following locations: the San Francisco (SFO) International Field Office (IFO) at (415) 876-2765, the New York (NYC) Flight Standards District Office (FSDO)-15 at (718) 553-1848, or the operations section of AFS-400.

35. DETERMINING THE CLASS OF NAVIGATION. The first determination that must be made concerning an air navigation approval request is the category of operation proposed. The inspector must determine whether the proposed operation is Class I navigation, Class II navigation, or both. The decisive factor in this determination is the operational service volume of public navigational aids (NAVAID) within the proposed area of operation. If the minimum en route flight altitudes specified and the locations of the public NAVAID's ensure that the flight will always be within the operational service volume, the entire en route operation is Class I navigation. In situations where the entire area of operation (at the minimum flight altitude specified) is outside (beyond) the operational coverage volume of public NAVAID's, the operation is Class II navigation. When portions of the proposed area of operation ensure that flights are continuously within the operational service volumes of public NAVAID's, that portion of the flight is Class I navigation, and the remaining portion is Class II navigation (see sections 3 and 4 of this chapter for in-depth discussions of Class I and Class II navigation).

A. Flight Altitude. It is important to understand that the minimum flight altitude is a key factor in the determination of the category of navigation (Class I or Class II). The operational service volume of a particular public NAVAID is heavily influenced by flight altitude. For example, at high altitude (above flight level (FL) 180), most very high frequency omnidirectional range stations (VOR) published for use at these altitudes have an operational service volume that extends to a radius of at least 130 nautical miles (nm) from the facility. However, at low altitudes (below 10,000 feet), the operational service volume of many VOR's seldom exceeds 40 nm. Therefore, it is highly probable that, for a route length of 260 nm between VOR's, operations above FL 180 would be Class I navigation and operations conducted below 10,000 feet would include both Class I and Class II navigation. The Class II navigation portion would begin at the edge of the operational service volume of the first VOR and end at the edge of the operational service volume of the second VOR. If the inspector determines that the proposal only involves Class I navigation, the direction and guidance in section 3 will be used. If the proposal involves both Class I and Class II navigation, the direction and guidance in sections 3 and 4 will be used for evaluation and approval or denial of the proposal.

B. Range of NAVAID's. Generally, determination of the exact range (operational service volume) of the NAVAID's intended to be used is not necessary.

A flight departing from the continental United States (U.S.) with a destination in Europe, for example, would obviously perform both Class I and Class II navigation and require equipment appropriate for both. In other situations it can be readily determined that flight operations will be conducted entirely within the operational service volume of federal NAVAID's. However, sometimes a determination of the exact range of a NAVAID is required to evaluate compliance with the requirement for a reliable fix once each hour. In the U.S., the frequency management branch in each region may be contacted to determine if a particular NAVAID has been flight-checked to a range greater than standard.

C. U.S./Coastal Operations. Within the U.S. and in nearby coastal areas under U.S. control, the Class I/Class II determination is simplified since any published instrument flight procedure (victor or jet airway, standard instrument departure (SID), or standard terminal arrival (STAR)) must be within the operational service volume of federal NAVAID's. Therefore, within the U.S., any route or fix published for instrument flight can be authorized for Class I navigation provided that the flight is conducted at or above the specified instrument flight rules (IFR) minimum altitude and at or below any IFR maximum authorized altitude specified.

D. Foreign/Remote Operations. In foreign countries and in oceanic/remote areas, this determination is more complex. In these cases, the determination is based on an equivalence to U.S. standards. In general, VOR, VOR/distance measuring equipment (DME) routes and fixes published in those areas are within the operational service volume (or foreign equivalent) of the NAVAID's specified. However, most air traffic service (ATS) routes based on nondirectional beacons (NDB) in oceanic/remote areas are Class II navigation over a considerable portion of the route. For example, the standard service volume (or coverage) of high-powered NDB's seldom exceeds 75 nm. (In special cases, a few NDB's have been evaluated by flight inspection and have an officially designated extended service volume significantly greater than 75 nm.) The flight inspection field office (FIFO) assigned responsibility for the geographic areas in question is the best and most up-to-date source of information on the operational service volume of these NAVAID's.

37. SPECIAL OPERATIONS. After determining whether a particular operation is Class I navigation, Class II navigation, or a combination of both, another important step is to determine if the operation involves any specific navigation authorizations to operate into special areas of operation or to use special navigation equipment or special navigation techniques.

A. Special Areas of Operation. Examples of special areas of operation include the following:

- Areas of magnetic unreliability
- North Atlantic Minimum Navigation Performance Specification (NAT/MNPS) airspace
- Canadian MNPS airspace
- Central East Pacific (CEPAC) Composite airspace
- North Pacific (NOPAC) airspace
- Sensitive international areas
- Arctic Ocean or Antarctic
- Western Atlantic, the Caribbean Sea, and the Gulf of Mexico
- South Atlantic and Gulf of Mexico control areas (Atlantic and Gulf routes)

B. Special Navigation Equipment. Examples of special navigation equipment include the following:

- Private NAVAID's or broadcast stations
- Area Navigation (RNAV)
- Long-Range Navigation (Loran-C)
- DECCA
- Tactical Air Navigation (TACAN)
- Omega
- Inertial Navigation Systems (INS) and Inertial Reference Systems (IRS)
- Doppler
- Global Navigation Satellite System (GNSS)

C. Special Navigation Techniques. Examples of special navigation techniques and/or procedures include the following:

- Pilotage
- Flight navigator
- Dead reckoning (DR)
- Celestial
- Pressure pattern
- Free gyro or grid

39. AIRWORTHINESS OF NAVIGATION EQUIPMENT. After determining the requirements related to any special operation, another important step is to determine whether the navigational equipment

and systems are airworthy and can perform their required functions. In all cases, it is necessary for the operator to provide written evidence that the proposed navigational systems and equipment are certificated for the type of operation (visual flight rules (VFR) or IFR) and the category of operation (Class I or Class II). In certain cases involving special areas of operation, such as areas of magnetic unreliability and NAT/MNPS, the airworthiness approval must reflect that these special requirements are also met. The written evidence may take the form of a type certificate (TC), supplemental type certificate (STC), or a Field Approval (FAA Form 337, "Major Repair and Alteration (Airframe, Powerplant, Propeller, or Appliance)"). This determination must be coordinated closely with the principal avionics inspector (PAI), or the regional Flight Standards airworthiness branch.

A. Class I Navigation. In the case of Class I navigation with conventional navigation equipment (such as VOR, VOR/DME, NDB), a statement in the FAA-approved flight manual (or an STC) that the navigation system and/or equipment is approved for IFR flight is usually sufficient.

B. Area Navigation (RNAV). RNAV systems used for IFR Class I navigation (except operations in the U.S. Class A airspace) must reflect a statement that the system meets the reliability and performance criteria of Advisory Circular (AC) 90-45, "Approval of Area Navigation Systems for Use in the U.S. National Airspace System," (or equivalent). RNAV systems used for VFR operations (Class I and/or Class II) must reflect an approval for VFR use.

C. Class II Navigation. Class II navigation systems used for IFR operations must reflect a statement that the system is approved for IFR flight and, if required, for any special areas of operation. The following are examples of Class II navigation systems requiring airworthiness approvals:

(1) Omega systems used as the sole means of Class II navigation must be approved under the provisions of AC 120-37, "Operational and Airworthiness Approval of Airborne Omega Radio Navigational Systems as a Sole Means of Long Range Navigation Outside the United States," (or equivalent).

(2) Omega systems used to update self-contained Class II navigation systems must be approved under the provisions of AC 120-31, "Operational and Airworthiness Approval of Airborne Omega Radio Navigation Systems as a Means of Updating Self-Contained Navigation Systems," (or equivalent).

(3) Loran-C systems must be approved for the area of operation under the provisions of AC 20-121, "Airworthiness Approval of Airborne Loran-C Navigation Systems for Use in the U.S. National Airspace System (NAS)," (or equivalent). See also AC 90-92, "Guidelines for the Operational Use of Loran-C Navigation Systems Outside the U.S. National Airspace System (NAS)."

(4) Inertial-based and Doppler systems must be approved under the provision of Federal Aviation Regulations (FAR) § 121.355 and Appendix G. This approval is not specifically required for FAR Part 135, but the same approval criteria apply.

41. TRAINING PROGRAMS AND MANUALS. Other important areas that must be considered are training programs and company manuals for the equipment used. The training programs and company manuals must adequately address the special characteristics of the proposed area of operation and the operational (navigation) practices and procedures that must be used. Other sections of this chapter provide additional direction and guidance on some specific requirements for training programs and company manuals for the various navigation systems and/or areas of operation.

43. MINIMUM EQUIPMENT LISTS. Additionally, most approvals of navigation equipment and/or areas of operation new to a particular operator also require changes to the company minimum equipment list (MEL). In all cases, principal inspectors shall review the company MEL to ensure that complete and accurate direction and guidance are provided to company personnel.

45. NAVIGATION PRACTICES, TECHNIQUES, AND PROCEDURES. Navigation practices, techniques, and procedures are other important parts of the approval process. They are especially significant in long-range navigation systems and in operations using RNAV systems. The approval of these operations almost always necessitates changes in cockpit checklists and operating practices and procedures. Due to the complexity of these operations, the necessary changes must be determined on a case-by-case basis considering the operator, the equipment, and the area of operations. In the case of Class II navigation, it is FAA policy that the practices, techniques, and procedures in AC 90-79, "Recommended Practices and Procedures for the Use of Electronic Long-Range Navigation Equipment," (or equivalent) shall be incorporated in the operator's approved long-range navigation programs.

47. VALIDATION TESTING REQUIREMENTS. It is essential for the inspector to evaluate the need for validation testing. In a simple case, such as approving Class I navigation in additional areas within the U.S. using conventional VOR/DME systems, a validation test is not necessary. However, in

more complex cases, validation testing is essential to demonstrate the operator's capability and competence to safely conduct the proposed operation (see volume 3, chapter 9, section 8).

49. GUIDANCE FOR USE OF AIRCRAFT EQUIPMENT SUFFIX /G. This paragraph describes a new equipment suffix available for use by aircraft equipped with a flight management system (FMS) and the eligibility of these aircraft to use new and evolving terminal area and en route flight operations. POI's should refer to this paragraph for policy, guidance, and descriptions of the specific aircraft equipment capability required to use the /G suffix.

A. General. FAA Order 7100.11, "Flight Management System (FMS) Procedures Program," contains the criteria to develop FAR Part 97 procedures, SID's, and STAR's, which will contain the note "FOR USE BY SLANT GEE (/G) AIRCRAFT ONLY." The order defines "/G" as an aircraft equipment suffix denoting that the aircraft has an FMS that meets the requirements of the following: AC 20-129, "Airworthiness Approval of Vertical Navigation (VNAV) Systems for Use in the U.S. NAS and Alaska"; AC 20-130, "Airworthiness Approval of Multi-Sensor Navigation Systems for Use in the U.S. National Airspace System (NAS) and Alaska"; AC 25-15, "Approval of Flight Management Systems in Transport Category Airplanes"; ARINC Specification 424-11; and RTCA DO-187. (FAA Order 7110.65, "Air Traffic Control," and the "Airman's Information Manual" (AIM), paragraph 5-7, are being amended to avoid conflict in the collective definitions.) Compliance with the following criteria will enable the operator to file /G on flight plans. The /G designation will also permit air traffic service personnel to initiate clearances at their discretion without receiving prior requests from flightcrews. To be eligible to utilize the /G suffix on a flight plan, the following criteria must be met:

NOTE: The AC's listed in this subparagraph are available from the Department of Transportation (DOT), Utilization and Storage Section, in Washington, D.C., or through regional distribution channels.

(1) Required Airborne Equipment. This consists of dual or single FMS's that meet the specifications of AC's 20-129, 20-130, and 25-15; or equivalent criteria accepted by the FAA.

(2) Additional Requirements.

(a) Flightcrews must have the procedural information and charts depicting the procedure to be flown.

(b) Unless otherwise authorized by the FAA, the waypoints describing any applicable route or procedure must be automatically loaded into the FMS flight plan from the FMS data base in the sequence they are to be flown. Manual input is not acceptable.

(c) Until international agreement is reached, use of the /G classification is authorized only in airspace where a U.S. air traffic facility provides air traffic separation service. For the /G designation to continue to be used in flight after a failure, the required navigation capability must still be met, or the flight plan classification must be downgraded to the appropriate capability classification (such as /R, /A).

B. Aircraft /G Eligibility and Assessment. Aircraft considered eligible to meet the criteria listed in this paragraph include the following:

- A-300-600; A-310; A-320; A-330; A-340
- B-737-300/400/500; B-747-400; B-757; B-767; B-777
- FK-100
- G-IV
- MD-11; MD-88

C. Inquiries. Any comments or inquiries concerning the criteria and guidance to qualify and use the /G equipment suffix or any requests for assessment of additional aircraft should be directed to the Technical Programs Division, AFS-400, at (202) 267-8452.

50.–70. RESERVED.

[PAGES 4-27 THROUGH 4-32 RESERVED]

by dead reckoning. The special provision of radar surveillance provides the equivalent level of safety for aircraft separation even through dead reckoning may be required for relatively long periods of time (approximately 45-50 minutes). In addition, due to the proximity of these routes to shore-based facilities, the accuracy of dead reckoning can be enhanced by using position fixing information from shore-based VOR/DME NAVAID's. Dead reckoning techniques and procedures must be included in the FAA-approved training program for operation on these routes. It should include contingency training for diversions such as weather avoidance or emergencies. See paragraphs 121A and 123.

C. Approval of the use of ICAO standard NAVAID's supplemented by dead reckoning in the South Atlantic and Gulf of Mexico control areas is granted by entering these areas in paragraph B50 of the operations specifications.

161. SPECIAL AREAS WHERE REDUNDANT LONG-RANGE NAVIGATION SYSTEMS ARE USUALLY NOT REQUIRED. Certain special areas have been identified where long-range navigation can be conducted with a single long-range navigation system.

A. Concept. The provisions of the FAR related to Class II navigation do not specifically require redundant or dual long-range navigation systems. The primary Class II navigation requirements are related to the level of navigational performance necessary for the control of air traffic. The objective of requirements for redundant navigational systems is to permit the flight to continue to navigate to the degree of accuracy necessary for the control of air traffic in the event a failure occurs in the navigational system being used.

(1) In certain situations, Class II navigation can be safely conducted using ICAO standard NAVAID's supplemented by dead reckoning. See section 4. Operations can also be safely conducted in much larger areas using a combination of redundant ICAO standard NAVAID's and a single, long-range navigation system. The basic concept for these operations considers the availability of ICAO standard NAVAID's, the lateral separation minimums applied by ATC (the navigational performance required), the length of the route or route segment, the complexity of the route structure, and the density of the air traffic.

(2) When the long-range navigation segment of the route flown is relatively short (several hours), the ATC lateral separation minimums are large (usually 90 nm or more), and the upper air winds are relatively stable, single long-range navigation systems may be adequate. The primary concern related to the use of single long-range navigation systems is preserving the ability to navigate to the degree of accuracy required for the control of air traffic following a failure in the long-range navigation system. Historically, the required navigational performance (following such failures) has been provided by the use of dead reckoning and ICAO standard NAVAID's. Since dead reckoning is much less accurate than using a long-range navigation system, the period of time that dead reckoning must be used is the most critical factor. Operational experience and analysis has shown that turbojet operations can be safely conducted (within special areas described in this paragraph) with an approved, single long-range navigation system and the redundant means of using ICAO standard NAVAID's.

B. Special Provisions for the Western Atlantic Ocean, Caribbean Sea, and Gulf of Mexico. The unique nature of the Western Atlantic Ocean, the Caribbean Sea, and the Gulf of Mexico permits operations with turbine-powered airplanes and certain offshore helicopter operations to be safely conducted with a single approved long-range system. Approval of the use of a single long-range navigation system is granted by entering a note in the limitations, provisions, and reference paragraphs column of paragraph B50 of the operations specifications. The note should indicate that a single system (specify the system make) is authorized. The areas of operation where these operations may be authorized in paragraph B50 of the operations specifications are as follows:

- The Gulf of Mexico
- The Caribbean Sea
- The North Atlantic Ocean west of the western boundary of NAT/MNPS airspace and west of a line from 27 degrees N/60W to 10 degrees N/55W

C. Special Provisions for Certain Routes in NAT/MNPS Airspace. Special contingency routes have been established in limited portions of NAT/MNPS airspace where aircraft equipped to use standard ICAO NAVAID's can operate with a single long-range navigation system. These routes are specified in the International Flight Information Manual (IFIM). Operations over these routes can be authorized provided the operator shows that the long-range navigation system/aircraft combination used and the operational procedures used meets NAT/MNPS requirements (AC 120-33). The approval is granted in accordance with paragraph B39(d) of the operations specifications and by adding that area of en route operation to paragraph B50 of the standard operations specifications.

D. Other Special Areas. Inspectors shall not authorize operations with single long-range navigation

systems in any other areas of operation without the review and concurrence of AFS-200. When a request to operate with single long-range navigation systems in areas not described in this paragraph is received, inspectors shall request assistance from one of the agency's navigation specialists. If the responsible inspector and the navigation specialist determine that the proposed operation can be safely conducted, a request for review and concurrence should be forwarded, through regional office, to AFS-200. AFS-200 will provide national direction and guidance for evaluating and approving or denying the proposed operation.

163. AIR TRANSPORTATION OPERATIONS WITHIN THE FORMER SOVIET UNION. The geopolitical area formerly known as the Soviet Union is now comprised of the Commonwealth of Independent States (C.I.S.) and other independent states. This group of aligned and independent states will be referred to as the C.I.S. throughout this volume.

A. General. As a result of the new bilateral air transportation agreement between the U.S. and the Russian Federation, a significant increase in air transportation between the two countries is expected. Due to the short distance between the state of Alaska and the C.I.S., significant increases in air traffic are expected in the far eastern portion of this region. This area, traditionally called the Soviet Far East (SFE), is now known as the Russian Far East (RFE). This section contains specific guidance to be used by POI's who have been asked to approve operations by U.S. air carriers within the C.I.S. Prior to beginning such approval, coordination with AFS-500 is required.

(1) Overview of Regional Differences in the C.I.S. The C.I.S. is more than twice the size of the U.S. and is significantly more diverse in aviation infrastructure. Flight operations within the western part of the country (generally west of the Ural mountains) are considerably less challenging than flights in the eastern part of the country. In the east, primarily due to limited facilities, sparse population, and harsh winter weather, routine flight planning may be difficult. Communications, navigation, and airport availability require special emphasis before the initiation of flights within this region. Operating aircraft in the western C.I.S. is generally less demanding; however, many significant operational differences exist.

(2) Overview of Airport and Airway Differences Within the C.I.S. The airports and airways in the C.I.S. are divided into two categories: international and domestic.

(a) International Airports and Airways. International routes and airports in the C.I.S. are generally available for use by foreign aircraft operators, provided the operators have received appropriate flight authorizations from C.I.S. and FAA authorities. These routes and airports are published in the Russian AIP. ATC communications are provided in English, and airports have customs and immigration services as well as fuel (AVGAS availability is limited). Instrument approach procedures are generally available in ICAO format and are similar to approach procedures used worldwide.

(b) Domestic Airports and Airways. Domestic airports and routes in the C.I.S. are generally not usable by foreign aircraft operators unless a Russian navigator is utilized to communicate with ATC and provide instructions to the flightcrew regarding navigation principles and procedures. En route and terminal air traffic control within the domestic systems are accomplished in the Russian language since a large percentage of C.I.S. air traffic controllers do not speak English. En route charts and instrument approach procedures for the domestic system are not published in English, are generally not available to foreign aircraft operators, and may not meet ICAO requirements. Weather and NOTAM information will be difficult or impossible to obtain and will not be provided in English or in standard format.

(3) General Navigational Considerations.

(a) The conduct of navigation off established airways in the C.I.S. is generally not permissible; therefore, foreign aircraft operations are restricted to published international routes and airports, even for refueling stops and alternate airports. Appropriate flight crewmember training on metric conversion and the availability in flight of conversion charts are necessary to enable crewmembers to convert metric altitudes, weights, and windspeeds. Although operators are permitted to conduct flights to or within the C.I.S. under visual flight rules (VFR), there are significant C.I.S. flight rule differences that normally preclude foreign aircraft operators from conducting flights under VFR.

(b) In some areas, ATC procedures have been developed that allow operations off published routings by using radar vectors. If clearance is received to operate off airways, the carrier is authorized to accept the clearance. However, due to military concerns, it is possible that the radar vectors received may not be most expeditious for the carrier.

B. Areas of Consideration. When reviewing an operator's proposal for operations within the C.I.S., POI's should review the following:

(1) Russian AIP. This is the primary document available concerning foreign aircraft operations

within the C.I.S. The Russian AIP is published by the Aeronautical Information Service (AIS), which is part of the Department of Air Transport (DAT) of the C.I.S. It is published in both Russian and English and contains detailed flight operational requirements as well as terminal, airport, and instrument approach charts in ICAO format. It is available from the AIS on an annual subscription basis, including monthly revisions. Subscription service or further information may be obtained from the following address:

Aeronautical Information Service
Department of Air Transport
67 Svoboda Street
Moscow, Russia
Telephone 492-82-85
AFTN: UUUUYOYX
Telex: 411182, AIS

NOTE: The navigation charts and standard instrument approach procedures (SIAP) for the C.I.S. domestic system are not included in the AIP and are usually not available in English.

(2) Communications. POI's should be aware that communications to, from, and within the C.I.S. can be difficult. Some specific areas of communication that POI's should consider include the following:

(a) ATC Communications. The ATC communication system within the C.I.S. is generally good. VHF is commonly used for en route communications, but HF is required for certain routes. The communication equipment requirements are listed in the Russian AIP. POI's are encouraged to evaluate all routes used by their assigned air carriers to ensure the adequacy of communications. Unlike U.S. controllers, C.I.S. air traffic controllers have limited access to weather and NOTAM information.

(b) Aeronautical Fixed Telecommunications Network (AFTN) or Society Internationale de Telecommunications Aeronautique (SITA) Networks. Data transmission and reception is accomplished by using the AFTN or SITA networks, although in remote areas only AFTN may be available. Transmitting or receiving messages by using the AFTN system within the C.I.S. (to and from many remote areas, especially in the RFE) may be less timely than desirable. This is because most messages enter and depart the C.I.S. in Moscow, and manual manipulation of messages is required at many transfer stations before and after reaching Moscow. Also, the existing telecommunications infrastructure is not reliable. No error checking is done; for example, if, because of a formatting error or for some other reason, a message is rejected en route, no one checks on this; the message is just dumped.

(c) Telephone Service. Telephone service to, from, and within the C.I.S. is limited. Various systems are used, including an HF troposcatter system which, due to technical limitations, makes communication extremely difficult. Establishing necessary reliable communications to and from line stations within the C.I.S. may be more difficult than in other areas.

(3) Navigation. It is permissible to conduct navigation on international routes within the C.I.S. by utilizing Class I or Class II navigation systems. Route widths vary from 8 km to 20 km, as indicated in the Russian AIP. It is the pilot's responsibility to keep the aircraft within established airway boundaries. Available altitudes also vary from one route to another as identified in the Russian AIP. When planning flights, operators must ensure that the desired altitudes are available for particular routes. This is especially important in the RFE where there is usually only one route available for flights. In the RFE, Class I en route navigation on international routes is primarily accomplished by utilizing NDB's); however, numerous compatible VOR transmitters will be installed in the coming years. In the western C.I.S., compatible VOR transmitters are also utilized to define international routes. In certain situations, especially in the RFE, it may be necessary to require operators to utilize Class II navigation to supplement Class I navigation due to the distance between NAVAID's and the limited width of airways. Class II en route navigation on international routes should be relatively simple, provided two conditions are properly addressed. The first condition is that, depending on the published route widths, length of flight, and type of Class II navigation equipment utilized, it may not be possible for an operator to maintain the course centerline accuracy required by the C.I.S. Limitations on the operation of some VLF/Omega systems, as shown in the flight manual supplement of the AFM, may preclude their use in some areas of the C.I.S. The second condition concerns the lack of VOR/DME transmitters, especially in the RFE, which means that special consideration must be given by operators to navigation accuracy requirements when utilizing inertial reference systems (IRS), such as B-757, B-767, and A-310. Again, it may not be possible to obtain the required navigation accuracy unless, considering the specific route and length of flight, VOR/DME updates are provided to the IRS. Other areas concerning navigation that POI's must consider when evaluating operator requests include the following:

(a) Alternate Airports. For flight planning purposes, operators must give careful consideration to the location of, and routing to, suitable alternate airports. Fuel planning must be carefully considered

due to potential difficulties with communications, diversion airport routings, and the lack of suitable airports.

(b) Extended Range Operation With Two-Engine Airplanes (ETOPS). Operations in certain areas with two-engine aircraft may require ETOPS approval due to the lack of adequate/suitable airports within 60 minutes of the operator's route. AC 120-42, "Extended Range Operation With Two-Engine Airplanes (ETOPS)," as amended, contains additional information.

(c) C.I.S. Navigator Assistance. The conduct of navigation within the C.I.S. is the responsibility of the pilot-in-command (PIC). Flights operating off of established international routes, or on the domestic route system, usually will not be permitted by the C.I.S. unless a C.I.S. navigator is aboard. In unique situations, a radio operator will also be required; however, these two functions are usually performed by the navigator. The assistance of a navigator will also be required for flights to or from any C.I.S. domestic airport. Although the navigator may be required by the C.I.S., the navigator is not a required flight crewmember according to the FAR and is not responsible for the conduct of the flight. The purpose of the navigator is to provide assistance in cross-checking course guidance information en route and to provide assistance in cross-checking information on terminal arrivals and departures, as well as instrument approach procedures (IAP). Due to jumpseat management considerations, POI's and operators should consider carefully any requests to carry C.I.S. navigators/radio operators. POI's shall obtain the concurrence of AFS-200 before approving an operator's carriage of these persons. When evaluating C.I.S. navigator/radio operator requirements, inspectors and operators should consider the following information:

1. Due to the lack of informational and technical data pertaining to operations in the C.I.S. domestic system, which are needed to meet requirements of FAR Parts 121 and 135, it may not be possible for operators to conduct operations at most domestic airports at this time.

2. C.I.S. navigators are required to use a cockpit jumpseat, which may preclude an FAA inspector from accomplishing a required en route inspection or validation test on a particular flight or series of flights.

3. The charts for the domestic system are usually not available in English.

4. The Russian DAT charges a substantial fee for the use of navigators.

(d) Area of Magnetic Unreliability. Depending on the latitude of the routes flown, operations may be conducted within the C.I.S. area of magnetic unreliability. Procedures for approving flights within an area of magnetic unreliability can be found in volume 3, paragraph 139; and in volume 4, paragraph 151.

(e) Approval of VFR-Only Flights for FAR Part 135 Operators. Due to complex VFR flight requirements (as identified in the Russian AIP) and requirements that aircraft operate on established airways at assigned altitudes, the approval of VFR-only flights by FAR Part 135 air carriers is not recommended. Deviations around clouds under C.I.S. flight rules will be difficult or impossible to achieve due to the rigidity of the C.I.S. airspace requirements to maintain airway altitude and airway centerline. Approval of FAR Part 135 VFR-Only air carrier operations within the C.I.S. shall be coordinated with AFS-200.

(4) Terminal IAP's. Terminal IAP's at international airports within the C.I.S. are conventional and should not be confusing to foreign operators. Arrival and departure procedures are similar to U.S. standard terminal arrival routes (STAR) and standard instrument departures (SID). Radar vectoring is uncommon; therefore, flight crewmembers should expect to fly full procedures as published in the AIP or Jeppesen charts. Flight crewmembers should be aware that use of QFE (atmospheric pressure at airport elevation) is common, and transition levels vary from one sector to another. IAP's are standard (instrument landing system (ILS), VOR, NDB). Precision radar approaches (PAR) are also very common throughout the C.I.S.; however, it is recommended that POI's exercise caution when approving requests by air carriers to conduct PAR's within the C.I.S., due to the lack of English language proficiency by most local air traffic controllers. POI's whose operators wish to conduct PAR's within the C.I.S. should approve these operations on an airport-by-airport basis. AFS-500 should be consulted for information as to current problems and policies. Terminal IAP's at domestic airports are usually neither published in English nor readily available to foreign air carriers. Therefore, POI's must ensure that their operators have obtained and demonstrated the adequacy of the data and meet the applicable portions of appropriate FAR concerning routes, airports, weather, and communication. C.I.S. navigators, who are required for foreign aircraft operators within the domestic system, will carry en route, terminal area, and instrument approach charts for their use within the domestic system. These charts are generally available in Russian language only. During all operations, the flightcrew shall utilize only publica-

tions that have been translated into English. These may be obtained from commercial sources. Class II navigation capability will likely be required for operators navigating within the domestic system, due to the inability of foreign aircraft to receive signals from the C.I.S. VHF RSBN (short-range navigation system). Many NAVAID's (VHF RSBN and NDB) within the domestic system use identifiers that do not have an English translation. POI's must reference FAA Order 8260.31,"Foreign Terminal Instrument Procedures," for guidance and approval criteria to ensure that established safety standards are met.

(5) Air Carrier Training Programs. Revisions to air carrier training programs and/or international procedures training for flight crewmembers may be required prior to issuing operations specifications. POI's should ensure that appropriate information contained in the Russian AIP is incorporated into air carrier training programs. For further guidance on training programs, refer to volume 3, chapter 2.

(6) Flight Approval. According to both the Russian AIP and the IFIM, an operator must receive written approval from DAT-Moscow before initiating a flight that will enter C.I.S. airspace. Operators shall not request flight approval through any regional ministry or Aeroflot office. Any approval granted by a regional office should not be considered sufficient unless accompanied by approval from DAT-Moscow. Aircraft operators intending to utilize standard air corridors and international airports in the C.I.S. should submit their request, via telex, directly to the DAT, far enough in advance so as to reach the ministry at least 5 working days (3 weeks is suggested) before departure. The telegraphic address is as follows:

International Department
Department of Air Transport
Leningradsky Prospect 37
Moscow, Russia
Telex: 411182 AFL SU

It is recommended that a simultaneous request be made to the Central Department of Operational Services (CDOS). The telegraphic address is as follows:

Central Department of Operational Services
Telex: 412303 CDS SU
AFTN: UUUUYAYW
SITA: MOWZGSU

Operator requests for aircraft using nonstandard routings and/or intending to land at airports normally serving domestic traffic should be submitted through the Economic Section of the U.S.Embassy in Moscow, APO, NY, 09862. The telegraphic address is as follows:

Amembassy Moscow
Telex: 413160 USGSO SU

Information to be included in Telex is listed in the AIP and IFIM. Recent operator experience indicates that the communication infrastructure may preclude receiving this authority in a timely manner. Personal presentations, to include objectives and justification, may be more effective.

(7) Validation Test Requirements. These are required for all U.S. operators seeking approval to operate within C.I.S. airspace. Guidance for validation tests is contained in volume 3, chapter 9.

164.–174. RESERVED.

[PAGES 4-70 THROUGH 4-80 RESERVED]

CHAPTER 1. AIR NAVIGATION AND COMMUNICATIONS

SECTION 6. GENERAL COMMUNICATION CONCEPTS, POLICIES, AND GUIDANCE

175. GENERAL. For all operations, Federal Aviation Regulations (FAR) § 91.183 requires that the pilot-in-command (PIC) of each aircraft maintain a continuous watch on the appropriate frequency when operating under instrument flight rules (IFR) in controlled airspace. This section contains information and guidance concerning the communication equipment requirements for FAR Parts 121 and 135 over-water operations.

177. VERY HIGH FREQUENCY (VHF)/HIGH FREQUENCY (HF) COMMUNICATIONS. (TBD)

179. COMMUNICATION EQUIPMENT REQUIREMENTS FOR OVER-WATER OPERATIONS.

A. Over-water Operations. FAR § 91.511 identifies the radio equipment that is required when operating "over water" more than 30 minutes' flying time or 100 nautical miles (nm) from the nearest shore. Different from the "extended over-water" definition found in FAR Part 1, this term is applied to FAR Part 91 operations of large and turbine-powered multi-engine airplanes.

B. Extended Over-water Operations. FAR Part 1 defines "extended over-water operation" for airplanes as "an operation over water at a horizontal distance of more than 50 nautical miles from the nearest shoreline . . ." and, for helicopters, as "an operation over water at a horizontal distance of more than 50 nautical miles from the nearest shoreline and more than 50 nautical miles from an off-shore heliport structure." The definition applies to both FAR Part 121 and 135 operations.

C. Regulations. The appropriate regulations and accompanying guidance for conducting extended over-water operations under FAR Part 121 are as follows:

(1) FAR § 121.351(a) states that no person may conduct an extended over-water operation unless the airplane is equipped with the radio equipment necessary to comply with FAR § 121.349 and an independent system that complies with FAR § 121.347(a)(1).

(2) FAR § 121.349 requires all of the equipment required in FAR § 121.347(a) to be installed. In addition, the radio equipment must be able to satisfactorily receive all radio navigational facilities to be used by either of two independent systems.

(3) FAR § 121.347(a)(1) requires the radio equipment necessary for the crew to communicate with at least one appropriate ground station from any point en route.

(4) FAR § 121.347(a)(2) requires the radio equipment necessary for the crew to communicate with appropriate air traffic control (ATC) from any point in the control zone within which flights are intended.

(5) FAR § 121.347(a)(3) requires the radio equipment necessary for the crew to receive meteorological information from any point en route by either of two independent systems, and further states that one of the means provided to comply with this subparagraph may also be used to comply with subparagraphs (a)(1) and (2) of FAR § 121.347.

D. Applicable FAR Part 121 Guidance. To ensure adequate communication with ground stations, FAR § 121.351 requires FAR Part 121 operators engaged in extended over-water operations to have all aircraft equipped with two independent communication systems. Each of these independent communication systems must be capable of communicating with at least one appropriate ground station from any point on the route.

(1) If this requirement can be complied with on all over-water routes by using VHF equipment, the airplane need only be equipped with two VHF receivers and two VHF transmitters.

(2) On the other hand, if compliance with FAR § 121.347(a)(1) can only be accomplished with HF equipment, the airplane must be equipped with two HF systems and at least one VHF system to also comply with FAR § 121.347(a)(2).

NOTE: Principal operations inspectors (POI) should be aware that Exemption No. 2081, as amended, grants relief from FAR § 121.99 by authorizing FAR Part 121 operators to dis-

patch airplanes over certain ocean areas with one of the two required HF radios inoperative at the time of departure, subject to certain conditions and limitations.

(3) The term "appropriate ground station" in FAR § 121.347(a)(1) includes, for example, aeronautical radio stations for ATC en route and air carrier dispatcher and flight-following services. Where there are gaps in air-ground communication capabilities that require the use of both VHF and HF systems en route to comply with FAR § 121.347(a)(1), there must be two VHF and two HF systems to comply with the requirement of FAR § 121.351.

E. FAR Part 135 Guidance. FAR § 135.165 prohibits operators from flying under IFR or on extended over-water operations unless the aircraft is equipped with certain communication and navigation equipment. Guidance for FAR Part 135 operators regarding this equipment is specified in FAR § 135.165 as follows:

(1) Turbojet Airplanes with 10 or More Passenger Seats and Multiengine Commuter Airplanes. FAR § 135.165(a) pertains to turbojet airplanes with a passenger seating configuration of 10 or more and to multiengine airplanes carrying passengers as a commuter air carrier. FAR § 135.165(a) requires, in part, for IFR or for extended over-water operations, that those airplanes have radio communications equipment appropriate to the facilities to be used and that the equipment be capable of transmitting to, and receiving from, at least one ground facility at any place on the route. It also requires, in part, that two "independent" transmitters and two "independent" receivers for communication be used. For the purpose of this section, a receiver or transmitter is "independent" if it does not depend on the functioning of any part of another receiver or transmitter.

(2) Other Aircraft. FAR § 135.165(b) pertains to all other aircraft and requires, in part, only one transmitter and two independent receivers for communications under IFR or during extended over-water operations.

(3) Use of an Additional Transmitter. FAR § 135.165(b)(7) also requires that an additional communications transmitter be used for extended over-water operations. This would mean that if an HF radio is required to communicate with ATC over any part of an extended over-water route, the aircraft will be required to be equipped with two HF independent transmitters and two independent HF receivers.

F. FAR Parts 121 and 135 Operations Ferrying Aircraft Under FAR Part 91. FAR § 91.511 requires those FAR Part 121 and 135 operators who ferry aircraft under FAR Part 91 to carry certain operable communications equipment on large and turbine-powered, multiengine airplanes when they are flown over water. For example, when both VHF and HF communications equipment are required for the intended route under FAR § 91.511, FAR § 91.511(d) allows the FAR Part 91 operator to conduct over-water operations with only one HF transmitter and one HF receiver, provided the aircraft is equipped with two independent VHF transmitters and receivers.

181. DATA LINK. (TBD)

183. AUTOMATIC DEPENDENT SURVEILLANCE. (TBD)

185. SATELLITE VOICE. (TBD)

186.–400. RESERVED.

[PAGES 4-83 THROUGH 4-120 RESERVED]

- A position from which a landing can be made visually
- A position from which a missed approach can be executed and completed if external visual references necessary to complete the landing are not established before passing DH or MDA/MAP

B. An instrument approach and its operating minimums are usually prescribed and approved for a specific airport and/or runway by the aviation authority that has jurisdiction over flight operations at that airport. The FAA is responsible for developing all civil IAP's and for specifying the operating minimums for all IAP's in the U.S., its territories, and the U.S. Army IAP's worldwide. In the case of other military IAP's, an instrument approach and its operating minimums are prescribed and approved for a specific airport and/or runway by the authority having jurisdiction over flight operations. There are various types of IAP's that are or may be approved for use by U.S. air carriers. These types of IAP's include the following:

- IAP's published in accordance with FAR Part 97
- IAP's authorized in operations specifications
- FAA-approved special IAP's (FAA Form 8260-7, "Special Instrument Approach Procedure")
- Department of Defense (DOD) IAP's at U.S. military airports
- IAP's published by a foreign country
- IAP's developed by an air carrier in a foreign country in accordance with FAA Order 8260.31, "Foreign Terminal Instrument Procedures"

455. U.S. STANDARD INSTRUMENT APPROACH PROCEDURES (SIAP). SIAP that are approved for all users of the U.S. National Airspace System (NAS) are published in accordance with FAR Part 97 and are incorporated in the operations specifications by reference. Even though CVFP are available for public use by aircraft on IFR flight plans, they are not instrument flight procedures. Except for CVFP's, it may be assumed that any SIAP charted in a National Oceanic Service (NOS) flight information publication is appropriately published in FAR Part 97.

457. OTHER INSTRUMENT APPROACH PROCEDURES (IAP). If an IAP is published in accordance with FAR Part 97 and is based on International Civil Aviation Organization (ICAO) standard NAVAID's, it is available for all users of the U.S. NAS. If, however, an IAP and its operating minimums are not published in accordance with FAR Part 97, other means have been established to authorize their use. In such cases, IAP is incorporated in operations specifications by reference (either with or without additional restrictions). This group of instrument procedures not published in Part 97, includes IAP's developed by certain U.S. military organizations, foreign governments, air carriers, and IAP's based on nonstandard NAVAID's such as TACAN, TALAR, airborne radar, or commercial broadcast stations. Many of these approach procedures are not available to all users due to the special training, knowledge, or equipment required to safely conduct them.

A. U.S. Military IAP's. U.S. military IAP's are approved by the local base commander and published by the DOD. Since these procedures comply with U.S. terminal instrument procedures (TERPS) criteria, U.S. military IAP's must be used by air carriers when operating at military airports, unless the procedure is noted "Not For Civil Use" by the military. IAP's published by the DOD for U.S. military airports are incorporated in the operations specifications by reference.

B. Foreign Government IAP's. IAP's and their operating minimums at foreign airports are established by the foreign authority having jurisdiction over flight operations at the airport. In general, the IAP's and operating minimums (if specified) at most foreign airports are developed in accordance with U.S. TERPS or ICAO procedures for air navigation services aircraft operations (PANS-OPS) criteria. IAP's developed by foreign authorities using TERPS or PANS-OPS are approved for use by U.S. air carriers in accordance with FAA Order 8260.31 and are incorporated in the operations specifications by reference. In some cases it may be necessary to restrict certain foreign IAP's to make them equivalent to U.S. or ICAO criteria. FAA Order 8260.31 provides direction and guidance for restricting such foreign IAP's. When a restriction to a foreign IAP is required, it must be specified in paragraph C58 of the operations specifications.

C. IAP's Developed By An Air Carrier. At some foreign airports, an air carrier may need to develop or choose to develop an IAP. The operations specifications enable an air carrier to exercise this option, provided the developed procedure meets either U.S. TERPS or ICAO PANS-OPS criteria. In such cases, the IAP developed by the air carrier may be authorized for use by listing it in paragraph C64 of the operations specifications, provided the air carrier submits appropriate supporting information in accordance with FAA Order 8260.31. These procedures may be based on either public or private NAVAID's.

D. Non-Federal NAVAID's. Non-federal NAVAID's can be used for public and special IAP's. Approval for the use of these NAVAID's within the NAS is established in FAA Order 6700.14, "Ground Certification of Non-FAA Federally Owned (Non-Military) Navigational Aids," and FAR Part 171. An inspector should become familiar with these documents before issuing approval to use these IAP's. Approval to use these IAP's is accomplished by listing them in paragraph C64 of the operations specifications.

E. Commercial Broadcast Station IAP's. In the past, limited authorizations to use commercial broadcast stations have been granted in unique situations. The need for these procedures has been steadily declining because of the increased availability of standard NAVAID's. In general, new approach procedures based on commercial broadcast stations will not be approved. In any case, AFS-400 review and concurrence must be obtained before an inspector may approve an IAP based on commercial broadcast stations.

F. Special IAP's. Special IAP's are those procedures developed by the FAA but not published in accordance with FAR Part 97. These special IAP's are not approved for general use due to the special training, procedures, knowledge, and/or equipment required to safely conduct them. Due to these special requirements, the use of special IAP's must be authorized on an operator-by-operator basis. Special IAP's are issued on FAA Form 8260-7 and authorized in paragraph C64 of the operations specifications.

G. IAP's Outside of Controlled Airspace. Since ATC separation services are an important element of safe instrument approach operations, special consideration and evaluation is required before operations can be authorized outside of controlled airspace (no ATC separation services available). This situation occurs when conducting an IAP at an airport that does not have an operating control tower or when a control zone is not active. The airports at which portions of IAP's are outside of controlled airspace must be authorized by paragraph C64 of the operations specifications.

459. SPECIAL APPROACH AND LANDING OPERATIONS. U.S. TERPS contains the established minimum criteria for standard IAP's within the U.S. NAS. PANS-OPS, volume II contains the established minimum criteria for IAP's in most foreign countries. These criteria allow for safe instrument approach and landing capabilities for aircraft equipped with ICAO standard NAVAID's (ILS, MLS, VOR, VOR/DME, NDB). Many operators have chosen to use airborne equipment exceeding the minimum capabilities required for instrument flight. A means of granting operational credit for using equipment with these increased capabilities has been established. The operations specifications provide the method to approve approach and landing operations using such airborne equipment. Examples of airborne equipment with increased capabilities include automatic landing systems (autoland), manually flown electronic landing systems (HUD), area navigation systems (RNAV), Loran-C systems, and airborne radar approach systems (ARA). The following subparagraphs briefly discuss these systems.

A. Autoland.

(1) General. Many large transport category airplanes are equipped with autoland systems, and a few helicopters are equipped with automatic deceleration and hover systems. As technology evolves, the trend of using autoland systems is increasing. Autoland systems are already standard features on many new airplanes. An air carrier, however, is not authorized to use autoland systems to touch down in FAR Parts 121 and 135 operations unless the particular flight control guidance system is authorized for autoland by the operations specifications. FAR § 121.579 and FAR § 135.93 prohibit the use of most autopilots below certain heights (50 feet or greater) during approach and landing operations, even during VFR weather conditions. The intent of these rules is to provide pilots with the terrain or obstacle clearance and reaction time necessary to safely intervene if the autopilot malfunctions. This is especially critical if the autopilot abruptly commands a hard-over, nose-down condition. Many autopilots ("single-channel" autopilots) used in FAR Parts 121 and 135 operations are not designed to provide the redundancy necessary to automatically detect all failure combinations. If such failures occur, the pilot must intervene, disconnect the autopilot, and recover manually. Since an aircraft will lose altitude if a hard-over, nose-down condition occurs, the autopilot must be routinely disengaged before descending below the height above terrain specified by FAR § 121.579 or § 135.93, as appropriate. Failure to disconnect the autopilot before descending below these heights could lead to ground contact during a recovery attempt if a malfunction should occur. Many aircraft are now equipped, however, with an automatic flight control guidance system designed to provide the performance, redundancy, and reliability necessary to detect all significant failure combinations and to prevent the autopilot from failing in a hard-over, nose-down condition (zero height loss). With these aircraft and equipment combinations, the safety objective of FAR § 121.579 and § 135.93 can be met even if the system is used to touchdown. "Fail-passive" and "fail-operational" automatic landing

systems provide this capability and can be approved for use to touchdown. The operator's approved training curriculum must include training on autoland operations, and the autoland equipment must be properly certificated and maintained. POI's shall authorize the use of autoland to touch down by issuing paragraph C61 of the operations specifications, "Flight Control Guidance Systems for Automatic Landing Operations Other Than Categories II and III," in accordance with FAA Order 8400.10 and FAR § 121.579(c) or § 135.93(d).

(2) Use of Autoland to Meet Recency of Experience Requirements for Landings Required by FAR § 121.439. Paragraph C61 of the operations specifications, dated January 11, 1988, states that the certificate holder is authorized to conduct automatic approach and landing operations (other than CAT II and III) at suitably equipped airports. The certificate holder shall conduct all automatic approach and landing operations in accordance with the provisions of this paragraph. POI's shall observe and adhere to the following direction and guidance involving the granting of landing credit for the use of autoland to meet recency requirements:

(a) Restriction. Only one autoland may be used toward satisfying the three landing currency requirements.

(b) Credit for Autoland. Credit for one landing each may go to both the pilot-in-command (PIC) and to the second-in-command (SIC).

(c) Definitions. For the purposes of this paragraph, the following definitions are applicable:

1. Autoland Approach: An autoland approach is a precision instrument approach to touchdown, and in some cases, through the landing rollout. An autoland approach is performed by the aircraft autopilot, which is receiving position information and/or steering commands from onboard navigation equipment. Autoland approaches are flown in VFR and IFR. It is common for operators to require their aircrews to fly coupled approaches and autoland approaches (if certified) when the weather conditions are less than approximately 4,000 feet RVR.

2. Automatic Landing Systems: An example of modern airborne equipment, the autoland is often standard on many new airplanes. This modern system gives the aircrew increased capabilities by enabling them to make safer instrument approaches and landings than those being done without the autoland. Autoland also refers to the landing that is accomplished with the autoland when activated during an IFR landing. The aircrew is required to constantly monitor this system to ensure safe operation of the aircraft.

B. Manually Flown Flight Control Guidance Systems Certificated For Landing Operations. Historically, pilots have not had flight director systems and other instrument information that enabled safe manual control of an aircraft to touchdown in instrument conditions. The recent development of flight control guidance systems such as HUD provides the pilot with instrument information in a manner that enables safe manual control of the aircraft through touchdown and rollout. The flight guidance provided by these systems enables a pilot to duplicate the performance and functions of an autoland system. Although the provisions of FAR §§ 121.579 and 135.93 do not specifically address use of manually flown flight control guidance systems, the safety objective of these rules is clearly applicable to their use. These systems provide flight guidance information equivalent to the performance, redundancy, reliability, and the hard-over, nose-down protection provided by autoland systems that are approved for use to touchdown. Manually flown flight control guidance systems certified for landing operations can be approved for use to touchdown. The operator's approved training curriculums must include training on such manually flown operations, and the equipment must be properly certificated and maintained. Use of these manually flown systems to touchdown can be authorized by the issuance of paragraph C62 of the operations specifications in accordance with this handbook.

C. Area Navigation Systems. IAP's based on RNAV's are not published in FAR Part 97. Within the U.S., these approaches are special IAP's developed for special use and issued on FAA Form 8260-7. An RNAV IAP may be developed and used by an air carrier, provided supporting information is submitted to the FAA. Since criteria for RNAV IAP's have not been established in ICAO PANS-OPS, all foreign RNAV IAP's must be developed in accordance with U.S. criteria. The use of RNAV systems to conduct IAP's can be authorized by issuing paragraph C63 of the operations specifications. RNAV IAP's are special IAP's; therefore, each RNAV IAP approved for a particular air carrier must be listed in paragraph C64 of the operations specifications.

D. Airborne Radar Approaches. ARA's are based on the use of airborne radar. Within the U.S, ARA's are classified as special IAP's and are established by the issuance of FAA Form 8260-7. Use of ARA's can be authorized through operations specifications, if the criteria in Advisory Circular (AC) 90-80, "Approval of Airborne Radar Approach (ARA)

Procedures for Helicopters to Offshore Platforms,'' as amended, and this handbook are met.

E. Offshore Approach Procedures (OSAP). OSAP's are based on the use of Loran-C and the airborne radar systems. OSAP's are established and approved in accordance with the criteria in AC 90-80. The use of OSAP's can be authorized by operations specifications.

460.–470. RESERVED.

[PAGES 4-141 THROUGH 4-144 RESERVED]

CHAPTER 2. ALL-WEATHER TERMINAL AREA OPERATIONS

SECTION 3. FACTORS AFFECTING ALL-WEATHER TERMINAL AREA OPERATIONS

471. GENERAL FACTORS AFFECTING OPERATING MINIMUMS. The external visual references necessary for controlling an aircraft solely by visual means are not available throughout an instrument approach and landing operation in instrument conditions. Therefore, the pilot must control the aircraft along the desired flightpath by reference to instruments, or by reference to a combination of instrument and external visual information. In all-weather operations, the desired level of safety is achieved through the use of special equipment, special training, instrument flight procedures, and associated operating minimums. These factors ensure that the combination of information (available from external sources and airborne instruments and equipment) is sufficient to enable an aircraft to be safely operated along the desired flightpath, provided weather conditions are at or above the operating minimum. As external visual information decreases due to restricted seeing-conditions, the quality and quantity of information from instrument and other equipment sources and the proficiency of the flightcrew must increase. For approach and landing operations, the specific considerations involved when determining operating minimums are related to the following factors:

- Precision with which the aircraft can be controlled along the desired approach path using the guidance provided by navigational aids (NAVAID) through reference to aircraft instrumentation and use of airborne equipment
- Flight characteristics of the aircraft
- Physical characteristics of the aircraft
- Character of the ground environment and obstructions
- Flightcrew proficiency
- Extent to which external visual information must be used to control the aircraft
- Interaction of these factors to provide satisfactory total system performance

473. PRECISION OF FLIGHTPATH CONTROL. The precision of flightpath control is dependent upon at least the following factors:

- Accuracy and integrity of the "signals-in-space" radiated by NAVAID's (accuracy and integrity of NAVAID's)
- Accuracy of airborne equipment in detecting the "signals-in-space" and in providing instrument information to the pilots or autopilot (accuracy of airborne equipment)
- Precision with which the pilot or autopilot maintains the selected flightpath in varying environmental conditions (flight technical error)

475. OBSTACLE CLEARANCE. Obstacle clearance is achieved by the pilot seeing and avoiding the obstacles, by the pilot's use of instrument information, and/or through instrument procedure design. It is not always practical to design an instrument procedure that permits instrument information to be used for avoiding obstacles. In these situations, operating minimums are established which ensure that the flightcrew will have sufficient seeing-conditions to identify obstacles and safely maneuver to landing using external visual references. Accuracy of the guidance and control systems, and the pilot's proficiency, determine the size of the area in which obstacle clearance must be considered. The more precise a total system is, the smaller the area in which obstacles must be considered (fewer obstacles) and usually lower operating minimums can be established. When obstacles are not limiting, the height to which an approach can be conducted without establishing external visual reference is limited by performance of the total system. Generally, lower operating minimums are achieved by increasing precision, reliability, and integrity of the total system (both airborne and ground based).

477. FUNCTION OF EXTERNAL VISUAL REFERENCES. Except for certain Category (CAT) III operations, external visual information is essential for a pilot to safely take off or to complete an instrument approach and landing. This external visual information (visual cues) is necessary for a pilot when assessing the three-dimensional position of the aircraft, its velocity, and its acceleration or deceleration in relation to the intended landing or takeoff surface. This information is essential for a pilot when

manually maneuvering (or when evaluating the autopilot's performance in maneuvering) the aircraft into alignment with the centerline of a landing or takeoff surface. External visual references are essential for a pilot to safely touch down (decelerate to air-taxi/hover for rotorcraft) within the touchdown zone (TDZ) and for maintaining directional control so as to stop on the runway (maintain directional control and avoid obstacles while air taxiing for rotorcraft). In degraded seeing-conditions, the quality of external visual information can be significantly improved by use of visual aids, such as runway markings and lighting. Such visual aids are necessary to increase the conspicuousness of the landing or takeoff surface. These aids provide pilots with the necessary visual references during takeoff, the final stages of approach and landing, and ground movement. The importance of visual aids increases as seeing-conditions decrease.

A. Approach lighting, TDZ lighting, runway centerline lighting, runway edge lighting, and runway markings, provide visual references to pilots for assessing lateral position and crosstrack velocity or acceleration.

B. Approach lighting, threshold lighting, in-runway lighting, and runway markings, provide visual roll references during landing, takeoff, rotation, and initial climb.

C. TDZ lighting and runway markings indicate the plane of a landing surface and identify the touchdown area, thereby providing a vertical and longitudinal reference. These visual aids provide necessary visual information for a pilot to determine vertical position, sink rate, and vertical acceleration or deceleration.

D. The visual guidance information from in-runway lights and/or markings must be sufficient to ensure adequate alignment and directional control information during takeoff or during final stages of landing and deceleration.

E. Reference to external visual aids is a primary requirement for controlling the aircraft's flightpath when operating below the minimum altitude (height) published for instrument flight.

479. MAXIMUM SINK RATES.

A. Perceptual Limitations. Restricted seeing-conditions significantly affect a pilot's ability to visually detect or perceive vertical height, sink rate (vertical velocity), and vertical acceleration. As seeing-conditions decrease, the pilot's ability to perceive vertical height, sink rate, and vertical acceleration degrades faster than the ability to perceive lateral errors and lateral accelerations (see discussion of visual illusions in paragraph 509). Personnel establishing operating minimums must consider these human perceptual limitations.

B. Aircraft Structural Limitations. According to structural design criteria, the aircraft structure must tolerate touchdown sink rates (vertical velocity) of at least 10 feet per second (fps) (600 feet per minute (fpm)). Touchdown sink rates higher than the maximum rates evaluated during the certification of an aircraft can cause serious structural damage including catastrophic failure. Therefore, instrument procedure design must provide for sink rates that give a pilot the capability of detecting unacceptable situations and adjusting the flightpath to achieve a safe landing considering available visual aids and operating minimums. Visual aids and operating minimums must provide a high probability that a pilot will be able to adequately control the aircraft and adjust the vertical flightpath to achieve acceptable sink rates at touchdown and touchdown within the TDZ.

C. Maximum Acceptable Sink Rates. Operational experience and research has shown that a sink rate of greater than approximately 1,000 fpm (16.67 fps) is unacceptable during the final stages of an approach (below 1,000 feet above ground level (AGL)). This is due to a human perceptual limitation which is independent of the type of airplane operated and is equally applicable to helicopters. Therefore, the instrument approach procedures and the operational practices and techniques must ensure that sink rates greater than 1,000 fpm are not required or permitted in either the instrument or visual portions of an approach and landing operation. Operating minimums and available visual aids must provide reasonable assurance that a pilot will have adequate external visual references in the visual portions of all instrument flight procedures (certain CAT III operations excepted). To be considered adequate, these external visual references must permit a pilot to adequately perceive sink rates and manually maneuver the aircraft (or evaluate autopilot performance) to achieve an acceptable touchdown sink rate and touchdown point, considering the operating minimums and the available visual aids.

481. COCKPIT DESIGN. Physical design of an aircraft cockpit has a significant impact on seeing-conditions during takeoff and the final stages of an instrument approach and landing. Cockpit design has a direct effect on a pilot's ability to determine the three-dimensional position of an aircraft in relation to a landing or takeoff surface and, consequently, the ability to safely control the flightpath of the aircraft. Therefore, cockpit design is a significant factor in establishing operating minimums of a particular air-

last name and first initial, Flight Engineer Certificate number, class rating, and signature; for example, "Brown, J., FE2069084, Reciprocating."

(b) A U.S. Armed Forces standardization/evaluation FE or FE instructor for the specific airplane class shall complete the form by signing and then listing the branch of service and type of designation in lieu of a certificate number; for example, "Brown, J., U.S.A.F., FE Instructor."

(c) Instructors employed by a training facility approved under FAR § 63.43 shall complete the form by signing and then listing the approved training facility name and position title; for example, "Brown, J., UAL, FE Instructor."

(2) Completion of FAA Form 8400-3. A U.S. Armed Forces standardization/evaluation FE or FE instructor for the specific airplane type shall complete Block 7 by signing and then listing the branch of service and type of designation in lieu of a certificate number; for example, "John Brown, U.S.A.F., FE Instructor, C-141 (L-300)."

234.–238. RESERVED.

FIGURE 5.3.1.1.
FLIGHT ENGINEER
KNOWLEDGE TEST AUTHORIZATION JOB AID

APPLICANT NAME: _____

INSPECTOR SIGNATURE: _____

DISTRICT OFFICE: _____

REQUIREMENTS TO TAKE KNOWLEDGE EXAMINATION

[ ] A. Read, write, and understand English

[ ] B. Age: 19 years

Note: A current medical certificate is not required.

[ ] EXPERIENCE REQUIREMENT. The applicant must provide written proof of meeting one of the subparagraphs of FAR § 63.37(b):

(Circle applicable number)

1. 3 years diversified maintenance experience, 1 year of which must be on multiengine aircraft of 800 HP

2. Graduate of a 2-year maintenance course, 6 months of which must have been on multiengine aircraft of 800 HP or greater

3. A degree in aeronautical, electrical, or mechanical engineering and 6 months maintenance experience on multiengine aircraft of 800 HP or greater

4. Holds a commercial pilot certificate and an instrument rating

5. Pilot-in-command experience: 200 hours PIC or SIC performing PIC duties in transport category airplanes or equivalent multiengine military airplanes

6. Engineer time: 100 hours in airplanes requiring an engineer or having three engines of at least 800 HP or the equivalent turbine power

7. Within the previous 90 days, completion of ground portion of approved FE training program

ELIGIBILITY ESTABLISHED

[ ] Complete and issue FAA Form 8060-7, "Airman's Authorization for Written Test."

[ ] Complete PTRS, Code 1576.

[ ] Give job aid to applicant if any number (1) through (6) is circled. Have applicant present the job aid to each inspector or examiner.

FIGURE 5.3.1.2.
FAA FORM 8400-3
"APPLICATION FOR AN AIRMAN CERTIFICATE AND/OR RATING"
(FRONT ONLY)

Form Approved
OMB No. 2120-0007

U.S. Department of Transportation
Federal Aviation Administration

Application For An Airman Certificate and/or Rating

☐ Flight Engineer
- ☐ Reciprocating Engine Powered
- ☐ Turbopropeller Powered
- ☐ Turbojet Powered

☐ Flight Navigator
☐ Control Tower Operator
- ☐ VFR Tower Rating
- ☐ Non-Radar Approach Control Tower Rating

☐ Aircraft Dispatcher
☐ Reissuance of Certificate
☐ Additional Rating

1. TYPE OF AIRCRAFT TO BE USED
2. TIME IN THIS AIRCRAFT
3. NAME OF EMPLOYER

4. Applicant Identification

A. NAME (First-Middle-Last)
K. PERMANENT MAILING ADDRESS (Include Zip Code)
B. SOCIAL SECURITY NO.
C. DATE OF BIRTH
D. HEIGHT
E. WEIGHT
F. HAIR
G. EYES
H. SEX
I. NATIONALITY
J. PLACE OF BIRTH
TELEPHONE NO.

5. Certificates Held by Applicant

A. ☐ Pilot
- ☐ Airline Transport
- ☐ Commercial
- ☐ Flight Instructor
- ☐ Private

B. ☐ Flight Navigator
C. ☐ Control Tower Operator
D. ☐ Flight Engineer
E. ☐ Ground Instructor
F. ☐ Aircraft Dispatcher
G. ☐ Mechanic

6. Applicant's Certification I certify that I meet all pertinent requirements of the Regulations for the certificate or rating applied for

Date _____ Applicant's Signature _____

Instructor's Recommendation

7. I consider the above applicant ready to take the test for which he/she is applying:

A. ☐ Oral Test
B. ☐ Flight Test
or
C. ☐ Practical Test *Aircraft Dispatcher Only*

D. Date	Instructor's Signature	Instructor's Certificate No. And Expiration Date	Grade and Certificate No.
E. Date	Instructor's Signature	Instructor's Certificate No. And Expiration Date	Grade and Certificate No.

8. Evaluation Record

	Inspector	Examiner	Signature	Date
Oral				
Practical Test Aircraft Dispatcher				
Practical Test Control Tower Operator				
Simulator Check				
Aircraft Flight Check				

9. Inspector's Record

☐ Temporary Airman Certificate Issued
☐ Notice of Disapproval of Application Issued
☐ Examiner's Action Accepted

DATE
INSPECTOR'S SIGNATURE
FAA OFFICE

CP	REG	OFFICE	CON	ISS	ACT	EXP	TMP	M.T.	DIS	CLASS	SEX	RATING	STATE	COUNTY

☐ Do Not Micro
☐ Special Mailing
☐ Airmail
☐ IFO Mailing
☐ Correspondence

FAA FORM 8400-3

[PAGES 5-140 THROUGH 5-144 RESERVED]

CHAPTER 3. FLIGHT ENGINEER CERTIFICATION AND CLASS RATINGS

SECTION 2. ORAL AND FLIGHT TESTS

239. ORAL TEST EVENTS. The events that should be evaluated on the oral test are specified in figure 5.3.2.1., "Flight Engineer Oral Test Job Aid." Chapter 1, paragraph 31, provides guidance for the conduct of the oral test.

241. ORAL TEST STANDARDS. In addition to the standards discussed in chapter 1, paragraph 31, applicants must be able to complete a typical takeoff data card. Applicants must also be able to apply corrections to the takeoff data computations, such as contaminated runway corrections, anti-skid inoperative corrections, and minimum equipment list (MEL)/ configuration deviation list (CDL) penalties. Applicants must demonstrate the ability to extract aircraft performance data, such as maximum allowable altitude, cruise exhaust pressure ratio (EPR), anti-ice corrections, and landing data from the operator's aircraft operating manual.

243. ACCEPTABLE METHODS OF ACCOMPLISHING FLIGHT TESTS. A flight engineer (FE) flight test is comprised of two phases: a normal procedures phase, and an abnormal/emergency procedures phase.

A. FAR § 63.39 requires that applicants demonstrate that they can perform the normal duties and procedures of FE's in actual flight during the certification test. Most Federal Aviation Regulations (FAR) Part 121 operators have been granted exemption No. 4901 (also known as the Air Transport Association of America (ATA) exemption). Under the terms of this exemption, applicants may be evaluated during the normal procedures phase in a "flight engineer simulator." See paragraph 245 for further information on this exemption.

> *FYI: A "flight engineer simulator" is the equivalent of a level 6 training device or higher, but does not need to have motion.*

B. The abnormal and emergency procedures phase of the flight test may be conducted in either an aircraft or a flight engineer simulator.

> *FYI: The ATA exemption only applies to the normal procedures phase and does not apply to the abnormal/emergency procedures phase.*

C. The normal phase and the abnormal/emergency procedures phase of the flight test must be conducted in two distinct phases. When both phases are conducted in an airplane, or in a flight simulator, the phases may be conducted on the same flight, but must be conducted separately.

245. ATA EXEMPTION. The ATA exemption allows an FE applicant, who is employed by a member airline of the ATA, to accomplish the normal procedures phase of the flight test in a flight engineer simulator. Under this exemption, there are two options for conducting the normal procedures phase of the certification flight test.

A. Tests With Line-Oriented Flight Training (LOFT) Scenarios. Under the exemption, all applicants may be administered a normal procedures phase with an approved LOFT scenario. Successful applicants tested in this manner are issued unrestricted certificates.

B. Tests Without LOFT Scenarios. The normal procedures phase of the flight test may only be conducted in a flight engineer simulator without a LOFT scenario for the following applicants:

- Applicants for additional class ratings
- Applicants for initial FE certificates who have qualified for the certificate on the basis of flightcrew experience—FAR § 63.37(b) subparagraphs (4) through (6)
- Applicants for initial FE certificates who qualify under FAR § 63.37(b)(7) and hold a commercial pilot certificate and instrument ratings

> *FYI: Applicants for initial FE certificates who do not meet the requirements of subparagraph 245B must complete the normal procedures phase either in*

an airplane or in a flight simulator using a LOFT scenario.

C. Inspectors and examiners must place a restriction on the certificate of an applicant who has been administered a normal procedures phase of the flight test in a flight simulator without an approved LOFT scenario. When required, the restriction shall read as follows: "This certificate is subject to the provisions of exemption No. 4901."

D. Before this restriction can be removed, the FE must complete 12 hours of operating experience (OE) under the supervision of an FE designated by the principal operations inspectors (POI). This period of supervision may be reduced by 1 hour for each takeoff and landing over 6 hours, but not less than 6 hours of supervised operating experience (SOE). The FE must obtain a letter from a check airman stating that the required SOE has been completed. The FE may exchange the restricted FE certificate and the check airman's letter for an unrestricted certificate. This exchange may be made by any Flight Standards District Office (FSDO) or by an examiner authorized to conduct FE certification for the airman's employer in the applicable airplane type.

E. The satisfactory completion of the normal procedures phase of the flight test in a flight simulator does not satisfy the requirement of FAR § 63.39(b)(1), which requires evaluation of the applicant performing an exterior preflight inspection. Inspectors and examiners may not issue a certificate until this requirement is met. Under the ATA exemption, this event may be accomplished by pictorial means for applicants who have been trained in a FAR Part 121 training program and who are employed by an ATA member airline.

247. CONDUCT OF AN FE FLIGHT TEST. In addition to the specific guidance provided in this paragraph, inspectors and examiners should refer to the guidance in chapter 1, paragraph 33, concerning the conduct of flight tests. Figure 5.3.2.2., "Flight Engineer Flight Test Job Aid," has been prepared to aid the inspectors and examiners in the planning and conduct of flight tests.

A. Normal Procedures Phase. In the normal procedures phase of the flight test, the applicant must be able to perform the normal duties of an FE while interacting with a full crew during preflight, start, taxi, takeoff, climb, cruise, descent, landing, and securing the airplane. This demonstration must include airplane performance computations, cruise control, and the normal paperwork required by the operator. As a minimum, the flight profile must provide for a climb to a typical cruise altitude, a cruise portion long enough for the inspector or examiner to evaluate the applicant's proficiency in cruise flight, a descent into the terminal area, and an instrument approach.

B. Abnormal and Emergency Procedures Phase. The applicant must be able to perform the duties of an FE in abnormal and emergency conditions while interacting with a full crew. The abnormal and emergency procedures phase may be accomplished in a flight simulator regardless of the applicant's qualifying experience or flight training.

(1) The inspector or examiner must evaluate the applicant performing as many procedures as necessary to determine the applicant's competence and proficiency. These procedures shall be selected from the operator's aircraft operating manual.

(2) When permitted by this handbook, inspectors and examiners should conduct the abnormal and emergency procedures phase of the flight test on the same flight simulator or airplane flight as the normal procedures phase. Abnormal procedures may be integrated into the normal procedures phase when practical and convenient. Emergency procedures may be evaluated on the same flight as the normal procedures phase, but must be conducted as a separate phase.

(3) The inspector or examiner should sequence events into a realistic scenario that tests the applicant's ability to interpret and analyze cockpit indications, operate the controls at the FE station, and coordinate with the other crewmembers while resolving these problems.

C. Flight Test Conditions. The following guidance applies to conditions under which FE flight tests must be conducted:

(1) No flight tests or portions of flight tests may be conducted in airplanes on revenue flights.

(2) On airplane flights, all crew positions except the FE's position, must be occupied by qualified crewmembers. If the flight test is conducted in a flight simulator, all crewmembers do not need to be qualified and current, but they must be proficient in the duties of the positions they occupy. The operator must provide a means for ensuring that individuals who are not qualified and current to conduct line operations remain proficient. One way (but not the only way) the operator may satisfy this requirement is to conduct an annual proficiency check using the same standards as required for a pilot-in-command (PIC).

(3) The inspector or examiner conducting the flight test shall not occupy a crew position during the flight test.

(4) Inspectors and examiners should avoid asking unnecessary questions, making comments, and shall discourage any conversation not specifically concerning the conduct of the flight test. Inspectors and examiners should take notes during the flight test for use during debriefing.

(5) Inspectors and examiners should require that the preflight and postflight paperwork duplicates that used by the operator during line operations. This ensures that the test is realistic and allows adequate evaluation of the applicant's performance.

249. FLIGHT TEST EVENTS. The following conditions and techniques for presenting selected maneuvers and procedures are provided to increase the standardization, reliability, and validity of the flight testing process. The inspector or examiner should vary the events as well as the sequence and conditions of those events presented. By varying the conduct of the flight test, the inspector or examiner can evaluate the adequacy of the operator's training program and the preparation of the applicant. Both the flight simulator and the airplane have unique advantages for flight tests. Inspectors and examiners should plan flight tests to use the advantages offered by either the flight simulator or the airplane.

A. Preflight Inspection. The applicant shall be observed performing the inspection of the aircraft interior, exterior, and emergency equipment in accordance with the operator's aircraft operating manual. These inspections should not be an extension of the oral test phase in which system knowledge is examined, but a demonstration of the applicant's ability to perform the appropriate safety checks. The inspector or examiner shall limit questions to only those necessary for determining if applicants can recognize when a component is in an unsafe condition. The applicant shall be evaluated while performing inspections of those items specified in the operator's aircraft operating manual.

(1) When the operator has been granted the ATA exemption, the applicant may be examined on the exterior inspection by pictorial means. On all other flight tests, an actual inspection of an airplane is required. Whether the flight test is conducted on the actual aircraft or by pictorial means, the inspector should ask specific questions about what is to be examined and what is an acceptable or unacceptable state. For testing purposes, the exterior inspection may be conducted before or after the actual flight at the inspector's or examiner's discretion.

(2) The applicant shall be required to complete the FE's portion of the interior and cockpit preflight check using the procedures in the operator's aircraft operating manual. The proper challenges and responses to the checklist must be used. When the flight test is conducted in a flight simulator, it is appropriate for the inspector or examiner to present minor malfunctions or to place switches out of position to determine if the applicant is accurately performing the specified checks. It is appropriate to include problems that require reference to the MEL.

B. Fuel Load. The applicant must demonstrate proficiency in the operator's procedures for checking and verifying the fuel load and management of the fuel panel. It is appropriate to present such problems as inoperative tank and totalizer gages or stuck fuel valves.

C. Engine Start Procedures. The applicant shall be required to perform the engineer duties during engine start, using the procedures specified by the operator's aircraft operating manual. When the flight test is conducted in a flight simulator, it is appropriate for the inspector or examiner to present one or more abnormal conditions such as a hot start or malfunctioning air or start valve. The problem should be carried through to the conclusion that would be expected in line operations for the evaluation of crew coordination and applicant proficiency.

D. Taxi. Inspectors and examiners shall evaluate the applicant's ability to perform the applicable checklists, to compute data, and to remain aware of clearances, restrictions, and radio calls.

E. Powerplant Checks. Powerplant checks should be accomplished before takeoff in accordance with the checklist. In a flight simulator, it is appropriate for an inspector or an examiner to present minor malfunctions to determine if the applicant is accurately performing these checks.

F. Takeoff and Climb. The applicant should be able to compute takeoff and climb performance. The applicant shall be required to demonstrate an ability to perform assigned duties in accordance with the operator's aircraft operating manual while remaining aware of the progress of the flight during takeoff and climb. The applicant should also be aware of traffic in the terminal area.

G. Cruise and Fuel Management. It is not necessary for the flight to remain in cruise flight for more than several minutes. The applicant shall be required, however, to establish cruise flight, compute required performance data, and complete the required paperwork. The applicant must be able to manage the fuel panel in accordance with the operator's aircraft operating manual. In the flight simulator, the inspector or examiner may accelerate the fuel burn to accomplish this evaluation in an expeditious manner. Inspectors

and examiners should induce problems such as stuck fuel valves or fuel imbalance. The applicant may be required to recompute range and fuel reserves for a diversion to an alternate airport.

H. Descent and Approach. The applicant must demonstrate an ability to perform assigned duties in accordance with the operator's aircraft operating manual in the descent and approach phases. The applicant must remain aware of the progress of the flight and traffic in the terminal area. The applicant should be able to monitor an instrument approach and support the pilots with required crew coordination and "call outs" on the approach.

I. Abnormal and Emergency Procedures. These events are tests of the applicant's ability and proficiency in perceiving indications, analyzing conditions, and acting in accordance with the procedures prescribed by the operator's aircraft operating manual. Inspectors and examiners shall induce problems and observe the applicant's performance. These events are not to be conducted as an extension of the oral test. See the guidance in chapter 1, paragraph 33B.

251. STANDARDS OF PERFORMANCE. In addition to the guidance in chapter 1, paragraph 33, inspectors and examiners are provided the following specific guidance for judging an applicant's performance on an FE flight test:

A. Systems Operator Skills. The applicant must be proficient in interpreting cockpit indications, be able to analyze the state of aircraft systems from these indications, and be proficient in operating the controls on the FE panel. The applicant must be sufficiently familiar with the operator's aircraft operating manual and systems operations to be able to select the correct procedure to apply in case of a malfunction.

B. Coordination Skills. The applicant must be able to establish priorities and accomplish required duties in a timely and accurate manner. An FE is more than a systems operator and must be able to act as a team member and maintain an awareness of the aircraft's position and current situation. An FE must be able to "keep the checklist moving" and anticipate the need for performance data and power settings. The FE must keep the pilots informed of the aircraft's systems status. The FE must also support the pilots on radio transmissions while scanning for other terminal area traffic and monitoring the approach procedure.

253. PLANNING A SIMULATOR FLIGHT TEST SEGMENT. The most important factor in conducting an efficient flight test is proper planning. The following sequence is recommended:

A. Determine the Method of the Flight Test. If the flight test is conducted under the ATA exemption, the entire flight test may be conducted in a flight simulator. If it is not conducted under this exemption, the normal procedures phase must be conducted in an airplane (see paragraph 245).

B. Determine Flight Simulator/Training Device Capabilities. Inspectors and examiners should familiarize themselves with the capabilities of the specific flight simulator or training device to be used. The problems and malfunctions to be presented must be planned and the flight simulator must be appropriately programmed.

C. Review the Operator's Manual. Inspectors shall acquaint themselves with the operator's aircraft operating manual, especially the sections on systems, crew coordination, and procedures.

D. Plan a Scenario. From the information learned in the previous steps, inspectors or examiners should be able to construct scenarios that will permit the efficient use of time and which will present the testing events in a realistic sequence. The sequence of events and the environmental conditions in which the events are presented must be planned before the flight test. When planning subsequent flight tests, the events and the environmental conditions should be varied. This variety ensures that applicants are presented with new problems and that the flight testing includes a sampling of the operator's entire FE training program over a period of time.

E. Determine Flight Simulator Operation. Either the inspector or an operator's employee may operate the flight simulator control panel during the flight test. Before an inspector operates a flight simulator or training device control panel, that inspector must receive instruction and clearance from an authorized representative of the operator. When an operator's employee operates the flight simulator control panel, that employee must be briefed on the sequence of events and signals to be used during the flight test. Inspectors shall not delegate the flight test planning function to an operator's employees. Inspectors must plan the sequencing of events and the conditions under which events are conducted.

255. APPLICANT BRIEFING. Before beginning the flight test, inspectors or examiners shall brief applicants on how the flight test is to be conducted and what is to be required of the applicant on the flight test. A briefing outline is included on applicable job aids. Inspectors and examiners are encouraged to develop their own expanded, individual supplements to the outline on the "FE Flight Test" job aid.

257. SUPPORTING CREWMEMBERS. All crew positions required by the approved airplane flight manual (AFM) must be occupied by personnel qualified in accordance with this handbook during the flight test (see chapter 1, paragraph 13C(1)). Under no conditions will an inspector or examiner conduct a flight test with a second applicant filling a crew position.

A. Inspectors and examiners shall brief supporting crewmembers that they are to perform their duties as specified in the operator's aircraft operating manual. The crewmember acting as PIC must perform PIC functions realistically. Supporting crewmembers must provide normal crew coordination support; however, they shall not be permitted to lead the applicant when the applicant is expected to take the initiative.

B. The applicant's ability to compute takeoff and approach data is evaluated on the oral test. Unless data computation is specifically the FE's duty, it is not required during the flight test segment. Inspectors and examiners should coordinate with a supporting crewmember to provide the data that will be required during the flight test.

259. CONDUCTING A FLIGHT TEST IN A SIMULATOR. Conducting a flight test in a flight simulator or training device is a skill requiring study and practice. Inspectors and examiners must endeavor to conduct flight tests in a manner that reproduces actual flight conditions as accurately as possible. Prior planning is an essential element. See paragraph 253 for a recommended method of planning the flight test.

A. When possible, the initial flight test parameters should be programmed into the flight simulator before the applicant arrives at the flight simulator, or this should be accomplished by someone other than the inspector or examiner. The inspector's or examiner's attention needs to be focused on the actions of the applicant and crew during the cockpit preparation phase of the flight test.

B. The flight test must be paced so that applicants are not rushed, but events proceed in an orderly and efficient manner. Experience has shown that a proficient inspector or examiner can conduct a complete initial FE certification or added class rating simulator flight test in approximately 1 1/2 hours. A flight test that extends beyond 2 hours may indicate poor performance on the part of the applicant or poor technique on the inspector's or examiner's part.

C. The flight simulator should not be frozen in position. During the cruise phase, the flight simulator may be moved along the flight plan route to facilitate entry into the descent and approach phase. The fuel burn may be accelerated or adjusted to accommodate moving the flight simulator ahead. Inspectors and examiners shall ensure that the aircraft's ground speed and fuel burn, however, are not accelerated until the applicant has demonstrated proficiency in fuel management.

D. Inspectors and examiners are required to evaluate the normal, abnormal, and emergency procedures that are published in the operator's aircraft operating manual but which are not explicitly specified as flight test events in the FAR. Two or three of these events is a reasonable number per flight test and should accomplish the purpose of ensuring that the applicant is proficient throughout the range of events in which training was conducted. The flight test is a test of proficiency and not of endurance. Inspectors and examiners are cautioned to exercise judgment and not to unnecessarily extend a flight test.

E. When a flight simulator malfunctions, it may appear to the applicant to be a problem with an aircraft system. When this or any other problem occurs, the applicant should not assume that the problem is a flight simulator malfunction, but should deal with it as though the problem has been encountered in an airplane.

F. Occasionally, a flight test will be delayed or interrupted due to malfunctions or power failures. When such interruptions occur, inspectors or examiners should be aware of the applicant's nervousness or fatigue. In fairness to the applicant, it may become necessary for the inspector or examiner to reschedule the remaining portion of the test segment.

261. CONDUCTING A FLIGHT TEST IN AN AIRPLANE. Previous planning is essential for the efficient conduct of a flight test in an airplane. The inspector or examiner must coordinate closely with the PIC in planning. Standard procedures as specified in the operator's aircraft operating manual must be followed in the performance of all events.

A. All emergencies and abnormalities conducted in an airplane shall be simulated. An engine may be shut down and restarted in flight, provided the minimum altitude specified in the operator's aircraft operating manual is observed. Before a problem is introduced, the inspector, examiner, or PIC, as appropriate, shall announce to the crew that a simulated problem is being introduced.

(1) Procedures for introducing simulated abnormal and emergency problems must in accordance with the operator's aircraft operating manual, training manual, or other directives. Inspectors and examiners may introduce problems by sounding a warning horn, a fire bell, or by illuminating a warning light, provided the warning can be produced with a

test switch that does not activate a system. Circuit breakers will not be opened to introduce problems. When an emergency or abnormal checklist procedure requires a circuit breaker to be opened, the circuit breaker will only be opened if the action cannot be simulated and the effect of opening the circuit breaker enhances the safety of the operations. For example, it is permissible to disable the ground proximity warning according to the checklist, on a no-flap approach, because the warning would continue to sound throughout the approach. It would not be permissible, however, to open a circuit breaker on an electrically driven hydraulic pump that could be turned off by a switch. Deactivated systems shall be fully reactivated immediately after the need for deactivation is over. For example, in some airplanes a hydraulic system must be depressurized before an alternate landing gear extension can be performed. In this case, the hydraulic system should be repressurized immediately after the landing gear is extended. It is appropriate to use streamers or other devices as reminders that systems have been deactivated.

(2) On flight tests conducted entirely in an airplane, inspectors and examiners shall not limit the problems given to applicants to the required engine failures only. Problems should be realistic. The selection of such problems in an airplane is more limited than in a flight simulator because of both safety and operational limitations. Certain problems, however, can be practically and safely conducted in an airplane. Examples include simulated instrument failures that lead to the selection of alternate switching, demonstration of manual operation of the pressurization system, or simulated electrical faults requiring alternate landing gear or flap extension.

(3) Should an actual malfunction occur while an emergency is being simulated, the flight test shall be immediately suspended, all systems restored to normal, and the problem resolved before the flight test is restarted. If a throttle has been retarded when an actual malfunction occurs, the safety pilot shall immediately restore engine thrust to normal on all engines.

263. DEBRIEFING. The inspector or examiner shall inform the applicant of the result of the flight test segment during the debriefing. See chapter 1, subparagraph 33F.

264.–268. RESERVED.

FIGURE 5.3.2.1.
FLIGHT ENGINEER ORAL TEST JOB AID

I. APPLICATION PHASE

[ ] Completed and signed FAA Form 8400-3, "Application for an Airman Certificate and/or Rating"
[ ] Instructor's recommendation (signed)
[ ] Current medical certificate of at least second class
[ ] Current or validated AC Form 8080-2, "Airman Written Test Report," for applicable class rating
[ ] FAA Form 8060-5, "Notice of Disapproval of Application" (if applicable)
[ ] Flight Engineer Certificate (if additional class rating)
[ ] Training records

II. THE ORAL TEST

[ ] A. KNOWLEDGE OF AIRCRAFT SYSTEMS:

[ ]	Hydraulic	[ ]	Electrical
[ ]	Pneumatic	[ ]	Powerplants
[ ]	Flight instruments	[ ]	Flight controls
[ ]	Landing gear, wheel	[ ]	Fuel
[ ]	Propellers	[ ]	Pressurization
[ ]	Air conditioning		

[ ] B. Knowledge of and ability to compute performance data, takeoff, landing, and cruise performance

[ ] C. Weight and balance

[ ] D. Ability to perform or state "Immediate Action" items

[ ] E. Knowledge of and ability to state operating limitations

[ ] F. Knowledge of MEL

PTRS CODES	ORIGINAL CERTIFICATE	ADDED CLASS	FAR PART
ORAL	1510	1518	63

FIGURE 5.3.2.2.
FLIGHT ENGINEER FLIGHT TEST JOB AID

APPLICANT NAME: _____

I. APPLICATION PHASE

[ ] Completed and signed FAA Form 8400-3, "Application for an Airman Certificate and/or Rating"
[ ] Instructor's recommendation (signed)
[ ] Current medical certificate (at least second class)
[ ] Current or validated AC Form 8080-2, "Airman Written Test Report"
[ ] FAA Form 8060-5, "Notice of Disapproval of Application" (if applicable)
[ ] Engineer certificate (if additional class rating)
[ ] Training records

NOTE: Applicants applying under FAR § 63.37(b)(7), who do not hold a commercial certificate and an instrument rating, and all applicants applying under FAR § 63.37(b), subparagraphs 1-4, require 5 hours of flight instruction in an airplane in the duties of a flight engineer.

II. FLIGHT CHECK PHASE

[ ] Oral test completed within last 60 days
[ ] Determine if the normal procedures is to be conducted in simulator using ATA exemption. If so:
  [ ] Determine if LOFT scenarios are to be used
  [ ] If LOFT not used:

1. Determine if applicant is eligible: Graduate of Part 121 school, or 200 hours PIC in transport category airplane, or 100 hours as FE
2. Plan simulator flight

CONDUCT BRIEFINGS

[ ] Brief applicant:
1. Evaluation will be on situational understanding, alertness, crew coordination, and the ability to perform the required procedures
2. Assume all malfunctions are real, not a simulator problem
3. Departure point, destination, aircraft weight, fuel, and weather

[ ] Brief supporting crewmembers:
1. Are to perform normal duties
2. Coordinate who is to operate simulator controls

CONDUCT OF NORMAL PROCEDURES SEGMENT

[ ] Exterior Preflight
[ ] Interior Preflight
[ ] Panel Set-up
[ ] Fuel Load
[ ] Engine Start Procedures
[ ] Taxi and Before Takeoff Procedures
[ ] Takeoff and Climb
[ ] Pressurization

FIGURE 5.3.2.2.—Continued
FLIGHT ENGINEER FLIGHT TEST JOB AID

[ ] Cruise and Fuel Management
[ ] Descent and Approach
[ ] After Landing and Securing
[ ] Crew Coordination
[ ] Situational Awareness, Traffic Scan, etc.
[ ] Performance Computations
[ ] Anti-ice, Deice

CONDUCT ABNORMAL AND EMERGENCY PROCEDURES SEGMENT
Conduct as many abnormal and emergency procedures as required to evaluate applicant on the following:
[ ] Trouble Shooting
[ ] Knowledge of the Checklist
[ ] Ability to Perform Procedures
[ ] Crew Coordination

III. DOCUMENTATION PHASE
[ ] Debrief applicant on performance.

SUCCESSFUL APPLICANTS OF SIMULATOR WHEN AIRPLANE SEGMENT IS TO FOLLOW:
[ ] Complete the application, sign, and date and return to applicant.
[ ] Complete and forward the PTRS Data Sheet to FSDO.

SUCCESSFUL APPLICANTS OF FINAL SEGMENT OF FLIGHT TEST:
Applicants more than 21 years old:
[ ] Receive from applicant:
1. Superseded certificate (if additional class rating)
2. AC Form 8080-2, "Airman Written Test Report"
3. FAA Form 8060-5, "Notice of Disapproval of Application" (if applicable)

[ ] Complete FAA Form 8410-4, "Temporary Airman Certificate," in duplicate. If a restriction for the ATA exemption is required, place this statement on the certificate. This certificate is subject to the provisions of exemption No. 4901
[ ] Issue the copy of FAA Form 8410-4, "Temporary Airman Certificate" to the applicant.
[ ] Mark, date, and sign the FAA Form 8400-3, "Application for an Airman Certificate and/or Rating."
[ ] Complete PTRS Data Sheet.
[ ] Attach items 1-3, the original temporary certificate, and the PTRS form to FAA Form 8400-3 (application) and forward to FSDO.

Applicants less than 21 years old:
[ ] Mark, date, and sign, FAA Form 8400-3, Application for an Airman Certificate and/or Rating.
[ ] Prepare letter of aeronautical competency in duplicate.
[ ] Give original letter of aeronautical competency to applicant.
[ ] Complete PTRS Transmittal Form.
[ ] Attach the following to FAA Form 8400-3 (application) and forward the paperwork to the FSDO:
[ ] AC Form 8080-2, "Airman Written Test Report"
[ ] FAA Form 8060-5, "Notice of Disapproval of Application" (if applicable)
[ ] Duplicate letter of aeronautical competency.
[ ] PTRS Data Sheet

UNSUCCESSFUL APPLICANT:
[ ] Mark, date, and sign the application.
[ ] Complete FAA Form 8060-5, "Notice of Disapproval of Application," in duplicate, indicating items to be accomplished on the retest, and the oral and simulator test dates, as applicable.
[ ] Issue copy of FAA Form 8060-5 to applicant.
[ ] Complete PTRS Data Sheet.

FIGURE 5.3.2.2.—Continued
FLIGHT ENGINEER FLIGHT TEST JOB AID

[ ] Attach original FAA Form 8060-5 and PTRS Data Sheet to the application and forward to FSDO.

PTRS CODES	ORIGINAL CERTIFICATE	ADDED CLASS	FAR PART
FE ORAL	1510	1518	63
FE SIMULATOR	1511	1519	63
FE AIRPLANE	1512	1520	63

[PAGES 5-155 THROUGH 5-160 RESERVED]

CHAPTER 9. SELECTED PRACTICES

SECTION 2. AMENDMENTS TO CERTIFICATES AND REPLACEMENT OF LOST CERTIFICATES

681. GENERAL. This section contains direction and guidance to be used by inspectors when processing amendments to certificates for airmen operating under Federal Aviation Regulations (FAR) Parts 121 and 135 (to include airman certificates, medical certificates, international crewmember certificates, and radio/telephone licenses), and when replacing lost certificates.

683. AMENDMENTS TO CERTIFICATES. An amendment to an airman's certificate is necessary whenever a change in name, address, nationality, sex, date of birth, and other changes occur. When amending airman certificates for these reasons, inspectors should use the following guidance:

A. Change of Name. Inspectors should have airmen apply for a name change on a certificate by first submitting Federal Aviation Administration (FAA) Form 8710-1, "Airman Certificate and/or Rating Application" (see figure 5.9.2.5.). The inspector should request that the applicant attach the current certificate and a photocopy of the marriage license, court order, or other document that substantiates the validity of the requested change to FAA Form 8710-1. The inspector should examine and verify the documents to the best of the inspector's ability, and then issue a temporary certificate. The inspector must fill out the "Inspector's Report" section of the application and include the application, the superseded certificate, a copy of the temporary certificate, and all other supporting documents and send them to AVN-460 of the Airmen Certification Branch (ACB).

NOTE: The ACB requests that photocopies be sent instead of the original documents.

B. Re-issuance of International Crewmember Certificates in a New Name. For the re-issuance of an international crewmember certificate in a new, or married name, the inspector should have the airman complete a new FAA Form 8060-6, "Crewmember Certificate Application," and indicate the new name, change of address (if applicable), certificate number, and an explanation about the application being reissued because of the airman's new name. The inspector must attach the crewmember's current crewmember certificate to the application, as well as a copy of the documentation, and two new photographs. The inspector must ensure that Part II of the application has been completed so that the crewmember certificate can be returned to the airline for distribution to the crewmember. The inspector should send the completed package to AVN-460 of the ACB.

C. Change of Address. FAR §§ 61.30, 63.21, and 65.21 all require the appropriate certificate holder to notify the ACB within 30 days of a change of the airman's permanent mailing address. This notification (see figure 5.9.2.4.) must be in writing to the Department of Transportation, Federal Aviation Administration, AVN-460, P. O. Box 25082, Oklahoma City, OK 73125-4940. Additionally, AC Form 8060-56, "Application for Replacement of Lost or Destroyed Airman Certificate(s) and Written Test Results," (see figure 5.9.2.3.) may be used. AVN-460 will not issue a new certificate based solely on the change of address.

NOTE: The address shown on an airman's application for a medical certificate is not routinely transmitted to the ACB. Therefore, the procedure for renewal of a medical certificate does not comply with change-of-address notification unless the applicant requests it in writing at the time of application.

D. Change of Nationality. In order to change the record of nationality, the airman may provide a photocopy of INS Form G641, "Application for Verification of Information." If an INS Form G641 is not available, the FAA inspector, or paratechnical, must review the naturalization document. When examining the naturalization document, the inspector should verify that the document has the petition number, the date of change, and the name and location of the court of issuance. The inspector may never accept verbal information to substantiate any of the required information. For any case that concerns a change of nationality, the inspector may not issue a temporary certificate; instead, the inspector shall forward a copy of FAA Form 8710-1, the current certificate, and the documentation to AVN-460 of the ACB.

NOTE: The inspector may determine the current fee for replacement of a certificate by telephoning the ACB in Oklahoma City at (405) 954-3261.

E. FAR § 61.15 Offenses Involving Alcohol. Recent changes to FAR § 61.15 require that airmen who are the subject of a motor vehicle action as defined by FAR § 61.15(c) are required to provide a report of each motor vehicle action involving alcohol or drugs to the FAA, Civil Aviation Security Division (AAC-700), P.O. Box 25810, Oklahoma City, OK 73125, within 60 days after the motor vehicle action. Failure to provide such a report can result in denial of any certificate or rating of a period of 1 year or suspension or revocation of any airman certificate issued under FAR § 61.

NOTE: Recent National Transportation Safety Board (NTSB) decisions have held that although an airman may report a motor vehicle action on an airman medical application, this does not constitute the report to Civil Aviation Security that is required by FAR § 61.15(e).

685. REPLACEMENT OF CERTIFICATES. A certificate that has been lost, stolen or destroyed must be replaced as soon as possible, since FAR §§ 61.3(a) and (c), 63.3, 65.51(b), and 121.383(a) require that flight crewmembers and dispatchers possess their airman and medical certificates when exercising certificate privileges. If a certificate is lost, stolen, or destroyed, the airman must obtain a replacement certificate directly from AVN-460 of the ACB. The ACB requires several weeks' notice to prepare a replacement certificate. The Western Union Company no longer provides the collect telegraphic service that was frequently used by airmen to confirm their status as holders of specified certificates and ratings pending certificate replacement. As a result, the ACB and the Aeromedical Certification Division (AAM-300) are no longer able to offer replacement of lost or destroyed airman and medical certificates via telegraphic media. Inspectors should tell airmen to obtain a facsimile (fax) verifying that the certificate is valid or to obtain a temporary replacement certificate from an FAA aviation safety inspector (ASI). Airmen may obtain quick confirmation of their status as holders of specified airman certificates and ratings under FAR § 61.29(c) via fax in lieu of a telegram. Fax messages should have the signature of the appropriate supervisor from each organization. A fax copy of standard form 14 may also be used in lieu of a telegraphic message to identify the airman or medical certificate held. A copy of the fax or temporary certificate must be in the airman's possession while the airman exercises the privileges of the certificate until receiving a permanent replacement certificate.

A. Permanent Replacement Procedures. An airman may obtain a permanent replacement certificate by applying in writing to either AVN-460 of the ACB, or AAM-300 (as stated in FAR § 61.29 and FAR § 63.16). The written request must contain all required information, the airman's signature, and the required fee. An airman may apply by form letter (see figures 5.9.2.1. and 5.9.2.2.), by AC Form 8060-56 (see figure 5.9.2.3.), or by a standard letter containing all applicable information. If both airman and medical certificates have been lost, the airman may send a request for both certificates to AVN-460. In this case, AVN-460 shall coordinate with AAM-300. These offices recommend that airmen send separate requests to each branch.

B. Obtaining a Temporary Certificate by Fax for Immediate Use. An airman may use a fax issued by AVN-460 as a temporary airman certificate and/or medical certificate. An airman must have an immediate need for the fax, such as a return flight to domicile, continuation of an extended flight schedule, or continuation with any near-term aviation employment. An airman may direct a concurrent request for both airman and medical fax confirmations to AVN-460 of the ACB. This service is available 24 hours a day, 7 days a week. In order to send a fax, AVN-460 must have a verified, working fax number, the name of the city and state to which the fax will be sent, the name of a person to contact, and the contact person's telephone number. The job aids provided in figures 5.9.2.1. and 5.9.2.2. may be used to request replacement certificates. The inspector should inform the airman that the fax may be used for up to 60 days while a permanent airman and/or medical certificate is being processed.

C. Air Carrier Certificate Verification Plan. The FAA has granted an exemption to the Regional Airline Association (RAA) (exemption number 5560, as amended) and the Air Transport Association of America (ATA) (exemption number 5487, as amended), which allows their member air carriers and similarly situated FAR Part 121 and 135 air carriers to issue to their flight crewmembers, on a temporary basis, confirmation of any required crewmember's certificate based upon information contained in the operator's approved record system. When this method of airman and medical certificate verification is used, the following conditions apply:

(1) Prior to utilizing any provision of this plan, each air carrier must develop a plan outlining the procedures it expects to employ in issuing a temporary confirmation document to crewmembers who do not

have in their personal possession the airmen or medical certificate required under the FAR for a particular flight. The air carrier must then submit the plan to and have it approved by the FAA POI assigned to that air carrier.

(2) If the individual no longer has any identification, the carrier's FAA-approved procedures and plan must include a method to ensure positive identification of the individual.

(3) Each airman who operates a flight under this exemption must comply with FAR § 61.29(c) and/or FAR § 63.16(d) and ensure that a request for a telegram or fax from the FAA confirming the applicable certificate is made within 72 hours of the initiation of any flight conducted under this exemption. The air carrier is authorized to make this application to the FAA on behalf of each applicable airman. The airman must provide a copy of the telegram or fax to the air carrier within 24 hours of receipt.

(4) The carrier's temporary confirmation document provided to the crewmember must include the written words, "Issued under the authority of Exemption No. XXXX, as amended." This document must be in the crewmember's personal possession during all flights.

(5) The privileges of this exemption are authorized for use only within the District of Columbia and the 48 contiguous states of the United States. The privileges of this exemption shall not be exercised in Alaska or Hawaii.

(6) Use of this exemption must be authorized by paragraph A5 in the air carrier's operations specifications.

D. Field Issuance of Temporary Certificates. When an airman needs to obtain a temporary certificate immediately, the preferred procedure is to request a fax verification; however, a temporary airman certificate may also be issued by a Flight Standards District Office (FSDO) or by an FAA ASI in the field. In such cases, inspectors must use caution and must positively confirm an airman's status and identity. Inspectors should accomplish an emergency issuance in the following manner:

(1) The airman must show that an immediate replacement of the lost certificate is necessary for either return flight(s) to domicile, continuation of an extended flight schedule, or continuation of aviation employment.

(2) The airman must be unable to reasonably or efficiently obtain a fax.

(3) The airman must be personally known to the inspector or must present acceptable evidence of identity. Positive identification must include a photograph of the applicant, the applicant's signature, and the applicant's actual residential address if it is different from the applicant's mailing address. Acceptable methods of identification include, but are not limited to, a driver's license, government identification card, and passport. The airman's physical description must match the physical description in the records at AVN-460 of the ACB.

(4) The inspector must confirm the validity, grade, and ratings of the lost certificate by contacting AVN-460 of the ACB and/or AAM-300.

(5) The temporary certificate should be clearly marked, "EMERGENCY FIELD ISSUANCE." The inspector should indicate the expiration date in the section entitled, "Rating and Limitations," and ensure that the date of expiration does not exceed 60 days from date of issuance. For medical certificates, the inspector should indicate the appropriate class held and its expiration date.

E. Replacement of International Crewmember Certificates. Inspectors may not issue or reissue international crewmember certificates in the field. Applicants for replacement certificates should apply by letter to AVN-460 of the ACB, stating the circumstances surrounding the loss of the original and including two recent photographs similar to those required for original issuance. To aid in identification, the applicant should provide all information that the original certificate included, such as full name as shown on the old certificate, certificate number, date of birth, and date the certificate was issued. The duplicate certificate is mailed to the operator for delivery to the applicant.

F. Replacement of Radio/Telephone Licenses. Requests for duplicate radio/telephone licenses should be sent to the Federal Communications Commission, 1919 M Street, N.W., Washington, D.C. 20554.

686.–696. RESERVED.

FIGURE 5.9.2.1.
AIRMAN REPLACEMENT CERTIFICATE

To: Federal Aviation Administration
Airmen Certification Branch, AVN-460

Regular Mail:
P.O. Box 25082
Oklahoma City, OK 73125

Overnight Mail only:
6500 S. MacArthur Blvd.
ARB Bldg., Rm. 301
Oklahoma City, OK 73167

PLEASE PRINT

Telephone (405) 954-3261

A. This is a request for:

_____ Airman certificate, permanent replacement

_____ Facsimile (fax) certificate confirmation/temporary replacement

B. Full name of person to whom the certificate was issued: _____

C. Permanent mailing address: _____
_____
_____

D. Temporary mailing address (for immediate mailing purposes if different than above):
_____
_____
_____

E. Date and place of birth: _____

F. Physical description: sex ____ height _____ weight _____ hair _____ eye color _____

G. Social security number: _____-_____-_____

H. Nationality: _____

I. State any available information regarding the grade, number, and date of issue of the certificate, and the ratings on it. _____
_____

J. Statement of reasons and circumstances for certificate replacement request. For company fax only:

FAX Number: _____ City: _____ State: _____

Point of contact: _____ Phone number: (_____)_____

FIGURE 5.9.2.1.—Continued
AIRMAN REPLACEMENT CERTIFICATE

For facsimiles:

Fax number: _____

Airman's name: _____

Certificate number: _____

Address: _____

City: _____ State: _____

Point of contact: _____

Phone number: (_____)_____

Signature: _____ Date: _____

FIGURE 5.9.2.2.
MEDICAL CERTIFICATE REPLACEMENT

TO: Federal Aviation Administration

Aeromedical Certification Division, AAM-300

Regular Mail:
AAC-23
P.O. Box 25082, Cashier
Oklahoma City, OK 73169

Overnight Mail Only:
6500 S. MacArthur Blvd
CAMI, Rm B-59
ATTN: Duplicate Desk
Oklahoma City, OK 73169

PLEASE PRINT

Full name of person to whom the certificate was issued: _____

Permanent mailing address: _____

_____

Temporary mailing address (for immediate mailing purposes if different than above): _____

_____

Birth date: _____ Social Security Number: _____-_____-_____

Class of lost, stolen, or destroyed Certificate: _____

Approximate date of issuance: _____

Statement of the reason and circumstances for requesting replacement. _____

_____

_____

For facsimiles:

Fax number: _____

City: _____ State: _____

Point of contact: _____

Phone number: (_____)_____

Signature: _____ Date:_____

(Medical Waivers are considered separate certificates).

Signature: _____ Date: _____

VOLUME 6. TABLE OF CONTENTS

SURVEILLANCE

Page

CHAPTER 1. GENERAL POLICIES AND PROCEDURES

Section 1. General

1. Introduction 6-1
3. Objective of Surveillance Programs 6-1
5. Planning and Executing Surveillance Programs 6-1
7. Surveillance Planning and Evaluation Responsibilities 6-4
9. Determining Inspection Requirements 6-4
11. Evaluation of Inspection Results 6-6
12.-24. Reserved 6-7

Section 2. Reporting on Surveillance

25. Introduction 6-15
27. Background 6-15
29. Objectives of PTRS 6-16
31. The Components of PTRS 6-16
33. Using the PTRS Comment Codes 6-21
35. Selection of Appropriate Primary Area and Key Word List Codes 6-21
37. Determining the Actual Issue of a Comment 6-23
39. Inspector Opinion Codes ("U","P","I","E") 6-25
41. Inspector's Narrative Comment 6-26
43. Supervisor/Management Responsibilities 6-27
44.-50. Reserved 6-27

CHAPTER 2. SPECIFIC TYPES OF INSPECTIONS

Section 1. General Inspection Practices and Procedures

101. General 6-127
103. Objective of an Inspection 6-127
105. Characteristics of an Inspection 6-127
107. Conducting an Inspection 6-127
109. Guidance for the Conduct of Specific Types of Inspections 6-129
110.-120. Reserved 6-129

Section 2. Ramp Inspections

121. Objectives of Ramp Inspections 6-137
123. Ramp Inspection Areas 6-137
125. General Ramp Inspection Practices and Procedures 6-137
127. Specific Ramp Inspection Practices and Procedures 6-138
129. Ramp Inspection Job Aid 6-141
130.-140. Reserved 6-141

Section 3. Cabin En Route Inspections

141. Objective 6-149
143. General 6-149
145. Cabin En Route Inspection Areas 6-149
147. Initiation and Planning 6-149

VOLUME 6. TABLE OF CONTENTS—Continued

Page

149. FAA Form 8430-13, "Request for Access to Aircraft" 6-150
151. Performing the Cabin En Route Inspection 6-150
153. Deferred Maintenance 6-151
155. Prerequisites and Coordination Requirements 6-151
157. References, FAA Forms, and Job Aids 6-151
158. Procedures 6-151
159. Task Outcomes 6-155
160. Future Activities 6-155

Section 4. Cockpit En Route Inspections

161. Objective of En Route Inspections 6-167
163. Cockpit En Route Inspection Areas 6-167
165. General Cockpit En Route Inspection Practices and Procedures 6-168
167. Specific Cockpit En Route Inspection Practices and Procedures 6-169
169. Cockpit En Route Inspection Job Aid 6-172
170.-180. Reserved 6-172

Section 5. Operator Trip Records Inspections (PTRS Code 1628)

181. General 6-181
183. Part 121 Operator Trip Records Requirements 6-181
185. Part 135 Operator Trip Records Requirements 6-183
187. Trip Records Inspection Areas 6-184
189. General Inspection Practices and Procedures 6-184
191. Specific Inspection Practices and Procedures 6-185
192.-200. Reserved 6-185

Section 6. Manuals Inspections (PTRS Code 1621)

201. General 6-199
203. Background Definitions 6-199
205. Procedures for Reviewing Operations Manuals 6-199
207. Periodic Review of Manuals 6-200
208.-218. Reserved 6-200

Section 7. Overwater En Route Inspections (PTRS Code 1624)

219. General 6-213
221. Background 6-213
223. Definition of Terms 6-213
225. Flight Planning 6-214
227. Cockpit Set-up 6-214
229. Gateway Procedures 6-215
231. Waypoint Changeover Procedures 6-215
233. After Arrival Procedures 6-215
235. Navigation Contingency Procedures 6-215
237. Aircraft Performance 6-216
239. Flight Release Rules 6-216
241. Inspector Assistance 6-216
242.-252. Reserved 6-216

Section 8. Proficiency and Competency Check Inspections (PTRS Code 1632)

253. General 6-229
255. Objectives of Proficiency and Competency Check Inspections 6-229
257. Proficiency and Competency Check Inspection Procedures and Guidance 6-229
259. Inspector Responsibilities During Check Airman Observations 6-231

VOLUME 6. TABLE OF CONTENTS—Continued

Page

261. Deficiencies 6-231
263. Recording Proficiency and Competency Check Surveillance on the PTRS System 6-232
264.-274. Reserved 6-233

Section 9. Crew and Dispatcher Records Inspections (PTRS Code 1627)

275. General 6-249
277. Procedures for Conducting a Records Inspection 6-249
279. Categories of Records 6-250
281. PTRS Input 6-251
282.-292. Reserved 6-251

Section 10. Ground Deicing/Anti-Icing Inspections

293. Objective 6-263
295. General Ground Deicing/Anti-Icing Inspection Practices and Procedures 6-263
297. Ground Deicing/Anti-Icing Inspection Areas 6-263
299. Specific Ground Deicing/Anti-Icing Inspection Practices and Procedures 6-264
300.-314. Reserved 6-265

Section 11. Base Inspections (PTRS Code 1616)

315. General 6-285
317. Definition 6-285
319. Location of Inspection 6-285
321. Planning a Base Inspection 6-285
323. Inspection Preparation 6-285
325. Notification of Inspection 6-285
327. Conduct of Inspection 6-286
329. Debriefing 6-286
331. PTRS Input 6-287
333. Future Activities 6-287
334.-344. Reserved 6-287

Section 12. Observation of Air Carrier Operations from Air Traffic Control (ATC) Facilities (PTRS Code 1845)

345. Objective 6-299
347. General 6-299
349. PTRS Input 6-299
350.-360. Reserved 6-299

Section 13. Inspection Procedures During Airline Strikes, Labor Unrest, Financial Stress (PTRS Code 1629)

361. General 6-311
363. Resource Management 6-311
365. Release of Information 6-311
367. Report and Analysis Function 6-311
368.-378. Reserved 6-312

Section 14. Reserved (TBD)*

379.-400. Reserved 6-325

Section 15. Line Check Inspections (PTRS Code 1633)

401. General 6-347
403. Specific Line Check Inspection Practices and Procedures 6-347
405. Use of Job Aid 6-347

*(TBD)=TO BE DEVELOPED

VOLUME 6. TABLE OF CONTENTS—Continued

Page

407. PTRS Input 6-348
408.-418. Reserved 6-348

Section 16. Part 121 Pilot-In-Command (PIC) Operating Experience Observations (PTRS Codes 1356 and 1631) .....

419. General 6-359
421. Scheduling Policies 6-359
423. Practices and Procedures 6-359
425. PTRS Input 6-360
426.-436. Reserved 6-360

Section 17. Training Program Inspections (PTRS Code 1626)

437. General 6-371
439. Training Program Inspection Practices and Procedures 6-371
440.-450. Reserved 6-374

Section 18. Operational Control Inspections (PTRS Code 1636)

451. Background 6-387
453. Objective 6-387
455. Practices and Procedures 6-388
456.-466. Reserved 6-388

Section 19. Station Facilities Inspections (PTRS Code 1635)

467. General 6-417
469. Management of Station Facilities Inspections 6-417
471. General Inspection Practices and Procedures 6-418
473. Specific Inspection Practices and Procedures 6-418
475. Station Facilities Inspection Report 6-421
476.-486. Reserved 6-421

Section 20. Surveillance of the Federal Aviation Administration Flight Program

487. Background 6-435
489. The FAA Flight Program 6-435
491. Responsibilities 6-435
493. Inspector Conduct and Action 6-436
495. Program Tracking and Reporting Subsystem (PTRS) Input 6-436
497. Geographic Vital Information 6-436
498.-504. Reserved 6-436

CHAPTER 2. SPECIFIC TYPES OF INSPECTIONS

SECTION 20. SURVEILLANCE OF THE FEDERAL AVIATION ADMINISTRATION FLIGHT PROGRAM

487. BACKGROUND. The Federal Aviation Administration (FAA) is aligning the operation and maintenance of FAA aircraft with that of certificated Federal Aviation Regulations (FAR) Part 135 air carriers. This effort is the result of an increased emphasis on the safe operation of FAA aircraft. The System Safety Survey, which was conducted at the request of the Director of the Office of Aviation Systems Standards (AVN-1) and the Associate Administrator for Aviation Standards (AVS-1), alerted the FAA to this need within FAA flight programs. This section outlines for inspectors the operational and surveillance responsibilities of the FAA Flight Program.

489. THE FAA FLIGHT PROGRAM. The FAA manages a large fleet of aircraft in support of six agency missions. There are 17 separate FAA headquarters, regional, and center organizations with over 100 field offices conducting agency flight operations and operating numerous makes and models of aircraft. Over 300 maintenance and ground support personnel work to support and maintain the FAA's fleet of leased and owned aircraft.

A. Four Groups. The operation of FAA aircraft is divided between four organizations because of the diversity of each group's mission, operations, goals, and objectives. Each organization maintains a standardized maintenance, operations, and training program. The four groups are as follows:

- Flight Inspection Area Offices (FIAO)
- Washington Flight Program, Washington, D.C.
- The FAA Technical Center, Atlantic City, New Jersey
- The Regional King Air and Aircraft Rental Program

B. Aircraft, Manuals, and Inspections. The fleet includes both owned and leased aircraft; the vast majority of regional aircraft are obtained through the rental program. A single general maintenance manual (GMM) covers the FAA's owned and leased aircraft fleet with a separate maintenance and inspection program for each type of aircraft. This applies only to agency-owned and leased aircraft.

491. RESPONSIBILITIES.

A. General.

(1) Office of Aviation Systems Standards (AVN). The Executive Director of Aircraft Operations (AVN-1AEO) is responsible for the management and oversight of the operation and maintenance of FAA aircraft. AVN-1AEO is assigned the task, within the AVN complex, of providing internal evaluation and auditing of regulatory standards for the operation and maintenance of FAA aircraft. Each organizational participant of the FAA flight program is responsible for operating in compliance with its manuals and procedures.

(2) Flight Standards Service. The Dallas/Fort Worth Certificate Management Office (DFW CMO) is delegated the responsibility by the Flight Standards Service for ensuring regulatory compliance of the FAA Flight Program. FAA Order 4040.24, "Operational Standards for FAA Aircraft," states that the Flight Standards Service is responsible for the following:

- Oversight and supervision of an inspection and surveillance program equal to that of an equivalent air carrier
- Ensuring compliance with the same regulatory standards for which an equivalent air carrier is responsible

NOTE: Exemptions and deviations (other than those authorized in FAA Order 8400.10) from regulatory requirements shall be approved by the Director of Flight Standards Service (AFS-1).

B. Manuals. The manuals used for operations, training, and maintenance of FAA aircraft were created as a result of regulatory reviews of FAR Part 135. All aircraft operated in the FAA Flight Program shall be maintained in accordance with the approved maintenance program requirements.

C. Regulatory Reviews. If the FAR or administrative policies regarding the FAA Flight Program are amended, regulatory reviews shall be conducted by the DFW CMO with participation by the AVN-1AEO staff. Applicable rules shall be incorporated into the appropriate manuals and programs.

D. Surveillance. Flight Standards shall conduct surveillance of FAA Flight Program participants in accordance with this order and with the following FAA Orders (as amended): 4040.24; 1800.56, "Administration of Aviation Standards Activities—Program Guidelines"; 8000.49, "Flight Standards District Office Geographic Area Responsibility Concept"; and the "General Operations Manual" (TI 4040.50). The DFW CMO's surveillance responsibilities are equal to those of a certificate-holding district office (CHDO).

E. Findings and Observations During Surveillance of FAA Aircraft and Flightcrews. Flight Standards inspectors shall bring findings or significant observations to the attention of the DFW CMO at the address that follows. In matters concerning flight safety, inspectors shall immediately notify the flightcrew and the CMO.

DFW Certificate Management Office
Attn: Manager, CMO
1205 Royal Lane
P. O. Box 612647
DFW Airport, TX 75261
Commercial 214-574-5924
FAX 214-574-5967
FAA.MAIL DFW.CMO

NOTE: Future development of manuals, programs, and revisions shall be coordinated between AVN-1AEO and the DFW CMO for review, comment, acceptance, or approval, as appropriate, before implementation.

493. INSPECTOR CONDUCT AND ACTION. Operations, airworthiness, and avionics inspectors should employ standard surveillance procedures when conducting inspections of the participants in the FAA Flight Program. Inspectors shall review FAA Order 4040.24 and 8400.10, volume 6, chapter 2, section 2, "Ramp Inspections," when conducting a ramp inspection of FAA aircraft and flightcrews. Because of the unique interior configuration of the FAA flight inspection aircraft, inspectors will not conduct en route inspections on FAA aircraft that are configured without an appropriate cockpit observer seat.

A. The inspector conducting surveillance must always be prepared to present identification.

B. When inspectors conduct surveillance, they should use tact and discretion when dealing with the flightcrews, maintenance personnel, or management personnel. The inspector should also consider the flight schedule and flight mission of the operation being inspected.

C. Surveillance by the inspector should include compliance with the applicable manuals, proper execution of airman certificate privileges, and aircraft airworthiness.

D. Personnel assigned to the FAA Flight Program are required by FAA policy and directives to comply with the procedures outlined in the appropriate general operations manual (GOM) and the FAR. When operations contrary to the GOM or FAR guidelines are observed or detected during surveillance, the reporting inspector shall take action under FAA Order 2150.3A, "Compliance and Enforcement Program," when applicable. Other actions involving noncompliance with FAA policy will be handled in accordance with the established FAA personnel procedures in FAA Order 3750.4, "Conduct and Discipline." All actions shall be coordinated with the DFW CMO through the appropriate Regional Flight Standards Division (RFSD) prior to implementation.

495. PROGRAM TRACKING AND REPORTING SUBSYSTEM (PTRS) INPUT. It is important for the DFW CMO to have an ongoing assessment of how the FAA Flight Program is being conducted. The PTRS will be used to track surveillance on the FAA Flight Program much like it is being used to track surveillance of FAR Part 135 operators. Inspectors shall use FAA Form 8000-36, "Program Tracking and Reporting Subsystem Data Sheet," when recording surveillance, certification, and investigation activities. The Flight Standards Automation System (FSAS) designator for the FAA Flight Program is **RU3A.**

497. GEOGRAPHIC VITAL INFORMATION. Each FSDO that has geographic responsibility for surveillance of an FIAO, the Washington Flight Program, and the FAA Technical Center shall maintain current Vital Information Subsystem (VIS) operator files for those geographic facilities as required by FAA Order 8000.49.

498.–504. RESERVED.

[PAGES 6-437 THROUGH 6-448 RESERVED]

VOLUME 7. TABLE OF CONTENTS

INVESTIGATIONS

Page

CHAPTER 1. ACCIDENT AND INCIDENT INVESTIGATION AND REPORTING

Section 1. Accident Investigations (PTRS Code 1702 or 1703)

1. General 7-1
3. Accident Investigation Division, AAI-1 7-1
5. Legal Basis For Investigations 7-2
7. FAA Investigations 7-2
9. Principal Inspector Notification and Involvement 7-3
11. Accident Notification 7-3
13. Inspector Functions 7-3
15. Aircraft Accident Report 7-4
17. PTRS Input 7-4
18.-28. Reserved 7-4

Section 2. Incident Investigations and Occurrences

29. General 7-13
31. Definitions 7-13
33. Responsibilities 7-13
35. Notification 7-13
37. Reports 7-14
39. PTRS Input 7-14
40.-50. Reserved 7-15

CHAPTER 1. ACCIDENT AND INCIDENT INVESTIGATION AND REPORTING

SECTION 2. INCIDENT INVESTIGATIONS AND OCCURRENCES

29. GENERAL. This section contains guidance to be used by operations inspectors when involved with the investigation and reporting of operator incidents. This section supplements Federal Aviation Administration (FAA) Order 8020.11, "Aircraft Accident and Incident Notification, Investigation, and Reporting."

31. DEFINITIONS. Inspectors involved with the investigation of an incident or occurrence should have a clear understanding of the definitions that follow. FAA Order 8020.11 contains the following definition for an incident which is repeated here only for clarification and convenience. Inspectors should refer to chapter 6 of FAA Order 8020.11 to review the investigative and reporting procedures for incident investigations. Inspectors should be aware that Flight Standards Service also uses the term "occurrence" to label an event that is investigated.

A. Incident (Program Tracking and Reporting Subsystem (PTRS) Code 1711 or 1712). An incident is defined as "an occurrence involving one or more aircraft in which a hazard or a potential hazard to safety is involved but not classified as an accident due to the degree of injury and/or extent of damage." An incident could affect the safety of operations. This definition covers a broad range of events and may include the following:

- Damage to an aircraft (other than an accident)
- Runway incursion
- Pilot deviation
- Near midair collision (NMAC)

NOTE: FAA Order 8020.11 identifies an NMAC as an incident. This incident should be investigated by using the procedures in chapter 6, section 2, of FAA Order 8020.11. When recording the work activities involved with an NMAC investigation, inspectors should use PTRS code 1720.

B. Occurrence (PTRS Code 1725). An occurrence is defined as an event that is not readily discernable as an incident. Events, such as a low-speed abort or a turnback are considered occurrences and must be investigated to determine the impact on safety of operations.

C. Correlation Between an Occurrence and an Incident. Not all events that are brought to the attention of Flight Standards Service have an obvious impact on the safety of operations, nor are they readily identifiable as an incident. Until an event can be identified as an incident, it should be regarded as an occurrence. The advantage of labeling an event as an occurrence is that it allows for an investigation of the facts for an accurate identification of the event without generating unnecessary reports.

NOTE: Safety improvement recommendations may result from either incident or occurrence investigations.

33. RESPONSIBILITIES. Managers of regional offices are responsible for investigating incidents occurring within their jurisdiction. This responsibility is usually delegated to the local Flight Standards District Office (FSDO). If an incident occurs in one regional geographic area, but the aircraft lands in another, the region in which the aircraft first landed is responsible for conducting the investigation.

NOTE: Runway incursions, pilot deviations, and NMAC's are always investigated by the region of occurrence, regardless of where the aircraft lands.

35. NOTIFICATION. FSDO's normally receive incident notification from either their regional operations center (ROC) or an air traffic (AT) facility. If the inspector observes or receives notification of an incident, including NMAC's, from a source other than an AT facility, and the incident is not known by the AT facility, the inspector shall immediately notify the nearest AT facility and provide the information that the facility needs to complete its notifications. The inspector may facilitate the notification process in this instance by contacting the ROC.

FYI: FAA Form 8020-11, "Incident Report (Eight Part Set)," is no longer used for pilot deviations, and FAA Form 3556, "Near Midair Collision

Preliminary Report," is no longer used for NMAC reports.

37. REPORTS. This paragraph discusses guidelines for the reporting of certain types of incidents. For specific procedures to be followed, inspectors should refer to the latest edition of FAA Order 8020.11.

A. Near Midair Collision. An NMAC is classified as an incident involving one or more aircraft in which a hazard or a perceived potential hazard to safety is involved; however, it is not classified as an accident due to the minimal degree of injury or extent of damage.

(1) Reporting. NMAC's are reported on FAA Form 8020-21, "Preliminary Near Midair Collision Report," and should contain the following information:

- Date, time, and location of the NMAC
- Fix or facility nearest the NMAC
- The NMAC location in respect to the fix or facility
- Aircraft information, such as make, model, and registration number
- Type of flight rules during the NMAC
- The aircraft altitude during the NMAC
- A brief description of the NMAC, along with comments

(2) Interviews. In some cases, FAA personnel may meet the aircraft involved in the NMAC for interviews with the flightcrews. When this becomes necessary, the normal order of facilities contacted to send personnel is as follows:

- Airport traffic control tower (ATCT)
- Flight service station (FSS)
- Air route traffic control center (ARTCC)
- FSDO

(3) Upgrade of Classification. An NMAC with a fatality is classified as an aircraft accident and shall be reported and documented as both an aircraft accident and an NMAC.

(4) Retention. The reporting facility shall retain the NMAC investigation package for a period of 30 months, or as described in the latest revision of FAA Order 1350.15, "Records Organization, Transfer, and Destruction Standards."

B. Pilot Deviations. These are classified as incidents, and include non-standard pilot operations such as flight at other-than-assigned altitudes, and controlled airspace intrusions.

(1) Reporting. Pilot deviations are reported on FAA Form 8020-17, "Preliminary Pilot Deviation Report," and should contain the following information:

- Incident report number
- Date, time, and location of the deviation
- Aircraft information
- The type of flight rules at time of deviation
- Aircraft altitude when the deviation was detected
- A brief description of the deviation, with appropriate comments

(2) Retention. The reporting facility shall retain the pilot deviation investigation package for 30 months, or as described in the latest revision of FAA Order 1350.15.

C. Other Incident Reports. Miscellaneous incidents are those other than NMAC's or pilot deviations, and may occur on an infrequent basis. Some incidents in this category are as follows:

(1) Forcible Seizure of Aircraft (Hijack). FAA personnel receiving information of a forcible seizure of an aircraft shall immediately notify their manager, who in turn shall immediately notify the Washington D.C. Operations Center (WOC), through the ROC.

(2) Hazardous Materials (HAZMAT). When a HAZMAT incident occurs, FAA personnel receiving the report must contact the regional Civil Aviation Security Office and give the appropriate information, including pertinent telephone numbers.

(3) Sonic Boom Complaints. When FAA personnel are notified of a sonic boom complaint, they shall refer the matter to the nearest military installation.

(4) Unidentified Flying Object (UFO). If any FAA employee receives a report of a UFO, the individual making the report should be referred to the nearest scientific establishment or institution of higher learning that has expressed interest in such reports. If concern is expressed that life or property might be endangered, refer the individual to the local police department.

39. PTRS INPUT. The PTRS shall be used to track the work activities of FAA inspectors during the investigations of occurrences and incidents, including NMAC's.

A. Occurrence Investigation (PTRS Code 1725). Most events that are "called in" to a FSDO can be initially regarded as occurrences. The PTRS offers the FAA supervisor a useful tool to record and track occurrences to a conclusion. Any event that is identified as an operations-related occurrence should be assigned to an inspector as an "open" item and entered into the PTRS using the activity code 1725, with appropriate comments in Section IV. Once a record of the occurrence has been established, it should be left open until the investigation is concluded. The supervisor can use these opened records to balance work activities and to track the progress of the investigation through the Open Items Report.

(1) When an occurrence investigation is concluded, and no further action is required, the inspector shall close the PTRS record with a "C," with the appropriate comments in Section IV supporting the conclusion.

(2) When an occurrence investigation is concluded and the results indicate that the event is actually an incident, the inspector shall close the existing PTRS record with a "C" in the "Results" field, with the appropriate comments in Section IV. If further action is required, the inspector should open a new record ID for an incident investigation with activity code 1711 or 1712 in the "Activity" field and activity code 1725 in the "Tracking" field.

NOTE: The "Triggers" field may be used for this function.

B. Incident Investigation (PTRS Code 1711 or 1712). If an event is clearly identifiable as an incident, inspectors may enter it into the PTRS directly by either using activity code 1711 for incidents that will require on-site investigations or activity code 1712 for incidents that will not require on-site investigations.

(1) When an incident investigation is concluded, and no further action is required, the inspector shall close the PTRS record with a "C," with the appropriate comments in Section IV supporting the conclusion.

(2) When an incident investigation is concluded, and the results indicate that the event is actually an accident, the inspector shall close the record with a "C" in the "Results" field, with the appropriate comments in Section IV. The inspector shall open a new record ID for the accident investigation under activity code 1702 or 1703 in the "Activity" field. Activity code 1711 or 1712 should be placed in the "Tracking" field to show that the accident investigation is the result of an incident.

NOTE: If the incident results in an enforcement action, the inspector must place the locally generated Enforcement Investigative Report (EIR) number in the investigative field.

40.–50. RESERVED.

[PAGES 7-16 THROUGH 7-26 RESERVED]

VOLUME 8. TABLE OF CONTENTS

GENERAL TECHNICAL FUNCTIONS

Page

CHAPTER 1. WASHINGTON HEADQUARTERS TECHNICAL FUNCTIONS (TBD)*

1.-90. Reserved 8-1

CHAPTER 2. REGIONAL TECHNICAL FUNCTIONS

Section 1. Regional Flight Procedures Branches

91. General 8-25
93. Standard Instrument Approach Procedures (SIAP) 8-25
95. Special Terminal Instrument Procedures 8-25
97. Military Procedures 8-26
99. Standard Operations Specifications 8-26
101. Obstruction Evaluation 8-26
103. Airport Airspace Analysis 8-26
105. Noise Abatement 8-27
107. Off-Airway Routes 8-27
109. Air Navigation Facilities 8-27
111. Non-Federal Navigation Aids 8-28
112.-114. Reserved 8-28

Section 2. Evaluation Staffs (TBD)

115.-194. Reserved 8-35

CHAPTER 3. TECHNICAL GROUPS, BOARDS, AND NATIONAL RESOURCES

Section 1. Background Information

195. Chapter Contents 8-77
197. Background Information and Definitions 8-77
198.-210. Reserved 8-78

Section 2. Aircraft Evaluation Groups (AEG)

211. General 8-91
213. AEG Responsibilities 8-91
215. Accident or Incident Investigation Support 8-91
217. Boards Conducted by the AEG 8-92
219. Duties of the AEG Operations Specialists 8-92
221. POI Assigned to a Specific Manufacturer (Reserved) 8-92
223. Locations 8-92
224.-234. Reserved 8-92

Section 3. Flight Operations Evaluation Boards (FOEB)

235. General 8-101
237. Responsibilities of the FOEB 8-101
239. Composition of an FOEB 8-101
241. Responsibilities of FOEB Members 8-101
243. Master Minimum Equipment List Development 8-101
244.-254. Reserved 8-102

*(TBD)=TO BE DEVELOPED

VOLUME 8. TABLE OF CONTENTS—Continued

Page

Section 4. Flight Standardization Boards (FSB)

255. General 8-111
257. Establishment of an FSB 8-111
259. Composition of an FSB 8-111
261. Responsibilities of the FSB 8-111
263. Responsibilities of FSB Members 8-111
265. FSB Report 8-112
267. Training Requirements for Follow-On Aircraft 8-112
269. Use of Flight Simulators or Training Devices 8-112
270.-280. Reserved 8-112

Section 5. Maintenance Review Boards (MRB)

281. General 8-121
283. Background 8-121
285. Functions of an MRB 8-121
287. Composition of an MRB 8-121
288.-300. Reserved 8-121

VOLUME 9. TABLE OF CONTENTS

TECHNICAL STAFF ADMINISTRATION AND RESPONSIBILITIES

Page

CHAPTER 1. INSPECTOR RESPONSIBILITIES, ADMINISTRATION, AND CONDUCT

Section 1. Responsibilities of Aviation Safety Inspectors

1. General 9-1
3. Investigations 9-1
5. Surveillance 9-2
7. Certification 9-2
9. Other Responsibilities 9-3
11. Inspector Resource Data Base 9-3
12.-20. Reserved 9-3

Section 2. Personal Ethics and Conduct

21. Purpose 9-23
23. On-the-Job Ethics and Conduct 9-23
25. Off-the-Job Ethics and Conduct 9-24
27. Outside Employment, Financial Interests, and Gifts 9-25
28.-40. Reserved 9-26

Section 3. Aviation Safety Inspector (ASI) Credentials

41. General 9-45
43. Types of Credentials 9-45
45. Eligibility Requirements 9-45
47. Application Procedures 9-45
49. Use of Credentials 9-45
50.-60. Reserved 9-46

VOLUME 9. TECHNICAL STAFF ADMINISTRATION AND RESPONSIBILITIES

CHAPTER 1. INSPECTOR RESPONSIBILITIES, ADMINISTRATION, AND CONDUCT

SECTION 1. RESPONSIBILITIES OF AVIATION SAFETY INSPECTORS

1. GENERAL. This chapter addresses many, but not all, of the responsibilities, standards of conduct, and credentials of aviation safety inspectors (ASI) assigned to air transportation job functions. This section describes the general responsibilities of the ASI. ASI's of the Federal Aviation Administration (FAA) play a key role in ensuring that the United States aviation system continues to be the safest in the world. This responsibility for safety in air travel covers almost every facet of aviation, including the certification of aircraft and airmen; the operation and maintenance of aircraft; aircraft manufacturing; and the approval of new aircraft design. Within the Flight Standards Division of the FAA, ASI's are divided by specialty into the groups of Airworthiness, Operations, and Avionics; and subdivided by specific position description.

A. Operations Inspector Certificate Management Functions. Air carrier operations inspectors are experienced pilots who specialize in the operation of aircraft and who ensure compliance with the Federal Aviation Regulations (FAR). These inspectors have responsibility for scheduled and supplemental air carriers, air travel clubs, and commercial operators. On a daily basis, air carrier ASI's may administer tests (written, oral, and practical) for a variety of certificates and ratings, perform en route cockpit inspections, and conduct surveillance on various other aspects of an air carrier's operation. These other aspects typically would include evaluating the operations of air carriers and similar commercial aviation operations for adequacy of facilities, equipment, procedures, and overall management to ensure safe operation of aircraft. Other important functions of air carrier ASI's include the examination of airmen (pilots, dispatchers, flight engineers (FE)) for initial and continuing qualification, as well as the evaluation of airman training programs, equipment, and facilities. When, in the course of an inspection, inspectors find an aircraft or airman not in compliance with the FAR, they may recommend an enforcement action. Such enforcement can range from administrative action to civil penalty and possible certificate suspension or revocation.

B. Additional Functions of Operations Inspectors. An additional role is the investigation of aircraft accidents in cooperation with the National Transportation Safety Board (NTSB), the Federal agency primarily responsible for investigating accidents. Air carrier ASI's may also speak to student groups about career opportunities in the field of aviation, and may conduct seminars and briefings on pertinent aviation topics for pilots, dispatchers, and airline officials. Inspectors may also, from time to time, be called upon to testify in administrative hearings and trials.

3. INVESTIGATIONS. Three areas that ASI's are responsible for investigating are accidents, incidents, and enforcements.

A. Accidents. ASI's may be required to conduct on-site accident investigations when serious injuries or fatalities have occurred. The inspector may work closely with the NTSB, or be solely responsible for the investigation if it has been delegated by the NTSB to the FAA.

B. Incidents. ASI's are responsible for the investigation of incidents, as appropriate. Some of the incidents that require investigation are as follows:

- Foreign air carrier incidents
- Reports of emergency evacuation
- Incidents involving hazardous materials
- Noise complaints
- Damage caused by a civil aircraft

C. Enforcements. ASI's are required to investigate, analyze, and report enforcement findings. In situations that involve alleged noncompliance with the

FAR, ASI's are required to make recommendations concerning enforcement action.

5. SURVEILLANCE.

A. Airman Surveillance. ASI's are responsible for the surveillance of airman who have been certified under Parts 61, 63, and 143 of the FAR. Some of the airman that an ASI may surveil are as follows:

- Flight instructors
- Designated pilot examiners (DPE)
- Pilot proficiency examiners (PPE)
- FE examiners
- Dispatcher examiners

B. Air Carrier Operator Surveillance. A number of the surveillance activities that ASI's shall perform are as follows:

(1) ASI's shall conduct the following:

- FAR Part 121 and 135 ramp inspections
- FAR Part 121 and 135 cabin en route inspections
- FAR Part 121 and 135 cockpit en route inspections
- Pilot proficiency and competency checks for FAR Part 121 and 135 operators
- FE proficiency checks for FAR Part 121 operators
- Evaluations of FAR Part 121 and 135 operators' aircraft operations from an air traffic control (ATC) tower

(2) ASI's shall inspect the following:

- FAR Part 121 and 135 operators' trip records
- FAR Part 121 and 135 operators' training programs
- FAR Part 121 operators' crew and dispatch records
- FAR Part 121 operators' flight-following and flight-dispatch procedures
- FAR Part 135 operators' flight-following or flight-locating procedures
- FAR Part 121 operators' check airmen
- FAR Part 121 operators' aircrew program designees (APD)
- FAR Part 121 and 135 operators' line stations
- FAR Part 135 operators' main base or sub-base
- FAR Part 121 and 135 operators during a strike
- FAR Part 135 operators' deicing programs
- FAR Part 135 operators' manuals
- Flight simulators or flight training devices (FTD)

7. CERTIFICATION.

A. Airmen. Some of the ASI's certification duties involve the following:

- Certificate an FE or flight navigator under FAR Part 63
- Designate or renew a pilot or FE examiner within an aircrew designated examiner (ADE) program
- Evaluate an airman's minimum navigation performance specification (MNPS) qualifications

B. Air Carriers. ASI's are heavily involved in the certification of FAR Part 121 and 135 air operators. Some of the many duties of the ASI in air operator certification are as follows:

- Approve FAR Part 121 and 135 operators' exit seating plans
- Approve FAR Part 121 operators' carry-on baggage programs
- Conduct proficiency checks of FAR Part 121 and 135 operators' pilots
- Conduct proficiency checks of FAR Part 121 operators' FE's
- Conduct FAR Part 121 and 135 emergency evacuations or ditching demonstrations
- Conduct FAR Part 121 and 135 aircraft proving and validation tests
- Designate check airmen under FAR Parts 121 and 135
- Evaluate FAR Part 121 and 135 operators' compliance statements
- Evaluate FAR Part 121 and 135 flightcrew training programs
- Evaluate FAR Part 121 dispatcher training programs
- Evaluate FAR Part 121 and 135 operators' operations manuals

- Evaluate FAR Part 121 and 135 approved flight manuals or company aircraft operations manuals
- Evaluate FAR Part 121 and 135 operators' aircraft checklists
- Evaluate FAR Part 121 and 135 operators' airport and weather aeronautical data
- Evaluate FAR Part 121 operators' special means of navigation
- Evaluate FAR Part 121 operators' powerback procedures
- Evaluate FAR Part 121 and 135 operators' airport/runway performance data analysis systems
- Evaluate FAR Part 121 and 135 operators' minimum equipment lists (MEL)
- Evaluate FAR Part 121 and 135 hazardous materials (HAZMAT) programs
- Evaluate FAR Part 121 and 135 passenger briefing cards
- Evaluate FAR Part 121 and 135 operators' crew recordkeeping systems
- Issue and amend operations specifications under FAR Parts 121 and 135
- Issue an air carrier operating certificate under FAR Parts 121 and 135
- Evaluate FAR Part 135 operators' flight-locating procedures
- Evaluate FAR Part 135 operators' flight/trip records
- Review FAR Part 135 operators' compliance statements

9. OTHER RESPONSIBILITIES. ASI's participate in other activities, such as accident prevention, and the issuance of authorizations. ASI's also perform many other duties, including the ones that follow:

- Make a deposition or court appearance
- Process a voluntary surrender of an operator's certificate
- Provide technical assistance

11. INSPECTOR RESOURCE DATA BASE.

A. Inspector Resources. The ASI workforce contains a vast pool of untapped knowledge and experience. The need to take advantage of this resource becomes apparent during the team selection process for the National Aviation Safety Inspection Program (NASIP), the Regional Aviation Safety Inspection Program (RASIP), and handbook working groups. In addition, an inspector's specialized knowledge of, and experience with, specific aircraft may be beneficial to another principal operations inspector (POI) during proving flights, checkrides, accident investigations, recurrent certifications, maintenance and inspection program approval, and field approval of repairs or alterations. It is also advantageous to identify inspectors who have aircrew experience in older, unusual, or rare aircraft.

B. Use of the Program Tracking and Reporting Subsystem (PTRS).

(1) Locating Resources. The Inspector Resource Data Base will enable Headquarters and field office personnel to identify inspectors with specific experience or knowledge. The information will be available to inspectors by their querying the PTRS in the National Data Base.

(2) Maintaining Records Currency. After completing an initial questionnaire and making the appropriate PTRS entry, all inspectors, including managers and supervisors, will be responsible for keeping their personal record current by entering any changes to the original information (such as additional type rating, training, team participation) in the record as necessary. The inspector should record the Record Identification Number of the PTRS entry so that future record updates can be made.

12.–20. RESERVED.

[PAGES 9-4 THROUGH 9-22 RESERVED]

CHAPTER 1. INSPECTOR RESPONSIBILITIES, ADMINISTRATION, AND CONDUCT

SECTION 2. PERSONAL ETHICS AND CONDUCT

21. PURPOSE. This section contains direction and guidance for aviation safety inspectors (ASI) pertaining to principles of ethics and conduct as they affect the performance of duties. (This section uses ASI to refer also to aviation safety technicians and to cabin safety specialists.) Although some basic outlines are listed in this section, all circumstances an inspector may encounter could not possibly be covered. As inspectors are always in the public eye, they are expected to exercise good judgment and professional behavior at all times while on and off duty.

A. Unique Responsibilities of Aviation Safety Inspectors. ASI's are exposed to a number of circumstances that are critical to their positions and which are not pertinent to other Federal Aviation Administration (FAA) job functions. The inspector has the critical position of frequently interpreting and evaluating the quality of training programs, operations and maintenance manuals, pilot and mechanic performance, and overall safety activities. It is imperative that all inspectors be sensitive to the responsibilities and demands of their positions and be objective and impartial while performing their duties. Inspectors must also be sensitive to actual as well as perceived appearances of any conflict that could disrupt the effectiveness or credibility of the Flight Standards mission.

B. Department of Transportation (DOT) Requirements. Inspectors are required to comply fully with the letter and spirit of the standards of conduct as set forth by this section; with those set forth in United States Office of Government Ethics publication, "Standards of Ethical Conduct for Employees of the Executive Branch"; and FAA Order 3750.3C, "Orientation to Government-Wide Standards of Conduct" (both include Title 5, Part 2635, of the Code of Federal Regulations (CFR)); and with those set forth in FAA Order 3750.4A, "Conduct and Discipline." The agency's policy on employee conduct is designed to encourage employees to maintain a level of professionalism that will promote the efficiency of the FAA and conform to accepted principles of conduct.

23. ON-THE-JOB ETHICS AND CONDUCT. The conduct of an ASI has a direct bearing on the proper and effective accomplishment of official job functions and responsibilities. Inspectors are required to approach their duties in a professional manner and to maintain that attitude throughout their activities. Through their conduct, inspectors working in direct contact with operators, and with the public, bear great responsibility in the determination of public perception of the FAA.

A. Rules of Conduct. All inspectors must observe the following rules of conduct:

NOTE: Bracketed references that follow in subparagraphs 23 and 25 denote page numbers in FAA Order 3750.4A, "Conduct and Discipline."

- Report for work on time and in a condition that will permit performance of assigned duties [p.3]
- Render full and industrious service in the performance of their duties [p.3]
- Maintain a professional appearance, as appropriate, during duty hours [p.3]
- Respond promptly to directions and instructions received from their supervisor [p.3]
- Exercise courtesy and tact in dealing with coworkers, supervisors, and members of the public [p.3]
- Obtain approval of all absences from duty [p.6]
- Conserve and protect FAA property, equipment, and materials (Inspectors may not use or permit others to use FAA equipment, property, or personnel for other than official business.) [pp.3 and 5]
- When duties concern the expenditure of public funds, have knowledge of and observe all applicable legal requirements and restrictions [p.4]

- Safeguard classified information as provided in FAA Order 1600.2, "National Security Information"; and unclassified information that should not be given general circulation as provided in FAA Order 1600.15, "Control and Protection of 'For Official Use Only' Information" (Inspectors shall not disclose or discuss any classified information or "official use only" information unless specifically authorized to do so.) [p.3]
- Observe the various laws, rules, regulations, and other authoritative instructions, including all rules, signs, and instructions relating to personal safety [pp.3 and 5]
- Uphold with integrity the public trust involved in the position to which assigned [p.3]
- Report known or suspected violations of law, regulations, or policy through appropriate channels [p.3]
- Not engage in private activities for personal gain or any other unauthorized purpose while on government property [p.5]
- Give any supervisor or official conducting an official investigation or inquiry all information and testimony about all matters inquired of, arising under the law, rules, and regulations administered by the FAA [p.6]
- Not use illicit drugs or abuse alcohol or other substances (No one known to do so will be permitted to perform any duties related to aviation safety until the FAA is satisfied that any such person is no longer a risk to public safety.) [p.7]
- Not participate in telephone eavesdropping (Advance notice must be given whenever any other person is placed on the line for any purpose whatsoever. An advance verbal warning must be given when an automatic recording device or a speaker telephone is used. The use of recording devices, portable or otherwise, on telephones shall be limited to areas involving air safety.) [p.9]
- Not make irresponsible, false, or defamatory statements that attack, without foundation, the integrity of other individuals or organizations (Inspectors are accountable for the statements they make and the views they express.) [p.9]

B. Sexual Harassment.

(1) The FAA is committed to providing a workplace that is free of sexual harassment. Acts of sexual harassment are prohibited conduct. All ASI's have the responsibility to behave in a proper manner and to take appropriate action to eliminate sexual harassment in the workplace.

(2) Actions will be determined to be "unwelcome" when the employee does not solicit the action and the employee regards the conduct as undesirable or offensive. Actions that are in violation of the FAA's policy against sexual harassment include, but are not limited to, the following:

- Unwelcome sexual teasing, jokes, remarks, or questions
- Unwelcome sexual looks (leering, ogling, or staring at a person's body) or gestures
- Unwelcome letters, telephone calls, or materials of a sexual nature
- Unwelcome touching of a sexual nature
- Promise of benefit in exchange for sexual favors
- Threat or act of reprisal for refusal to provide sexual favors

(3) Acts of sexual harassment will be treated as misconduct in violation of the agency's policy against sexual harassment and, when appropriate, as unlawful sex discrimination in violation of Title 29, Chapter XIV, Part 1604, of the CFR.

25. OFF-THE-JOB ETHICS AND CONDUCT.

A. General. The FAA expects ASI's to conduct themselves off duty in a manner that will not adversely reflect on the agency's ability to discharge its mission. ASI's must conduct themselves while off duty in a manner that will not cause the public to question their reliability and trustworthiness in carrying out their responsibilities as employees of the FAA.

B. Political Activity. It is the right of all ASI's to vote as they choose and to express their opinions on all political subjects and candidates. However, public expression of opinion in such a way as to constitute taking an active part in partisan campaigns is prohibited. Any political activity that is prohibited in the case of an ASI acting independently is also prohibited in the case of an ASI acting in cooperation with others or through an agent. Any ASI violating the political activity restrictions will be subject to disciplinary action. Some of the prohibited political activities are as follows:

- Soliciting, receiving, disbursing, or otherwise handling contributions made for political purposes [p.11]

- Furnishing names and addresses of other inspectors, or any other Federal employee, for the purpose of political solicitation [p.11]
- Using official authority or influence for the purpose of interfering with an election or affecting the result thereof [p.11]
- Discriminating against another ASI or prospective employee because of political contributions or opinions [p.11]

C. Subversive Activity. No inspector shall become a member of any organization that the inspector knows advocates the overthrow of the constitutional form of the government of the U.S., or that seeks by force of violence to deny other persons their rights under the Constitution of the U.S. [p.12]

D. Striking. No inspector shall engage in, or encourage another inspector, or any other Federal employee, to engage in a strike, work stoppage, or work slowdown, in a labor management dispute involving the Federal Government. [p.12]

E. Meeting Financial Obligations. All ASI's are expected to meet their private financial obligations in a proper and timely manner. Failure without sufficient excuse or reason to honor valid debts, including claims based on court judgments and tax delinquencies, or to make and adhere to reasonable arrangements for settlement, will constitute grounds for disciplinary action. [p.12]

F. Inaugural Flight and Ceremonial Events. ASI's shall not accept invitations from airlines, aircraft manufacturers, or other aviation-related businesses, that are subject to FAA regulations, for flights or for free transportation in connection with roll-outs and similar ceremonial events. [p.13]

27. OUTSIDE EMPLOYMENT, FINANCIAL INTERESTS, AND GIFTS.

NOTE: FAA Order 3750.3C, "Orientation to Government-Wide Standards of Conduct," addresses the FAA ethics program. Brackets in this paragraph indicate additional sources for reference.

A. Business Interests. ASI's and their immediate families should seek clarification and guidance before engaging in any airline or other business activity for which the FAA has oversight responsibility. If an inspector holds any interest that may give the appearance of impropriety, the inspector should immediately consult the Assistant General Counsel through the Regional Flight Standards Division (RFSD) manager in the inspector's region for a determination. [5 CFR 2635.402 and .403]

B. Conflict of Interest. Inspectors may hold employment or own businesses that do not present a conflict of interest with their official job functions. Inspectors who wish to participate in outside aviation activities (such as flight instruction, commercial flying, or any other aviation-related activity) should seek clarification and *approval* from the Assistant General Counsel and RFSD manager in their region. [5 CFR 2635.801, .802, and .803]

C. Public Speaking. Inspectors may not receive payment for speaking on issues that deal with their official job functions. Teaching or instructing at colleges, universities, or vocational schools may be acceptable, but should be coordinated and *approved* through the Assistant General Counsel in that region. [5 CFR 2638.801 and .807]

D. Fund Raising. ASI's may not participate in fund raising or soliciting donations from any business or activity for which their office is assigned oversight responsibility. Exceptions to this requirement may exist for door prizes for aviation safety seminars by the aviation safety program. They should be coordinated through the Assistant General Counsel in that region. [5 CFR 2635.808]

E. Gifts.

(1) Avoiding Conflict of Interest. Gifts should be accepted only when the inspector knows that the gift will not give the appearance of a conflict of interest. The gift may not exceed $20 in value for a single gift or $50 in 1 year from a single donor. Non-working lunches are considered to be gifts. Coffee and donuts or working lunches at an operator's office are not considered to be gifts. [5 CFR 2635.204]

(2) Acceptance of In-Flight Meals During Inspections. During en route inspections, inspectors must not expect or solicit in-flight meals from air carriers. However, unsolicited in-flight meals may be accepted during en route inspections. This exception is based on an interpretation by the Office of General Counsel, General Law Branch (AGC-110). The interpretation states in part that "an employee may: . . . Accept food or refreshment of nominal value on infrequent occasions in the ordinary course of a luncheon or dinner meeting . . . or on an inspection . . . if the employee is properly in attendance and there is not a reasonable opportunity to pay . . ." or if there is no air carrier policy concerning reimbursement of the air carrier. [Office of Chief Counsel, General Law Branch, Interpretation dated 11/8/91]

(3) Special Occasions. An inspector may give a supervisor a gift that does not exceed $10 in value. Gifts that exceed $10 in value may be given for special

occasions such as weddings or other events. [5 CFR 2635.304]

NOTE: Inspectors shall exercise the utmost discretion when giving or receiving gifts.

F. Airline Awards.

(1) Free Tickets. If an ASI is involuntarily bumped from a flight paid for by the government and receives a free ticket for the inconvenience, that free ticket belongs to the government. If an ASI voluntarily solicits bumping from a flight paid for by the government and receives a free ticket, the free ticket is the ASI's personal property. [Office of Chief Counsel, Gregory S. Walden, 8/28/89]

(2) Frequent Flyer Mileage. Frequent flyer miles acquired from the use of a government-paid ticket belong to the government and should be used for future official government travel. The General Accounting Office (GAO) has ruled that if frequent flyer miles belonging to the government are mixed with personal frequent flyer miles, the total miles belong to the government. (It is highly recommended that inspectors maintain separate frequent flyer accounts and not mix program benefits.) Policy for the relinquishment of any frequent flyer benefits that an FAA employee may have accrued on official travel is contained in DOT Order 1600.6, "Travel Management." [Comptroller General of the U.S., File B-220542, B-220542.2, B-220542.3, B-220542.4, and B-220542.5, 11/16/87]

G. Personal Credit Cards. Benefits acquired from the use of a non-government credit card on a government-paid trip belong to the inspector. [Comptroller General of the U.S., File B-236219, 5/4/90]

28.–40. RESERVED.

[PAGES 9-27 THROUGH 9-44 RESERVED]

APPENDIX 2. INSPECTOR FEEDBACK

INFORMATION CURRENCY. The Air Transportation Division, Technical Standards Programs, AFS-200 HB, has developed a revision process to ensure that the information contained in this handbook is correct and current. Any comments regarding content, whether to point out deficiencies or suggest improvements, should be directed to AFS-200 HB. All comments will be reviewed, and the handbook will be amended as appropriate. A job aid for suggesting changes is provided on the following page for your convenience. Your feedback is important to the success of this document. FAA.MAIL can be directed to AFS200HB.

INSPECTOR FEEDBACK SHEET

Subject: [X] Order 8400.10, "Air Transportation Operations Inspector's Handbook," Change No.____

To: Manager, Technical Standards Programs, AFS-200 HB
800 Independence Ave., SW.
Washington, D.C. 20041

Please check all appropriate items. Attach a copy of the affected pages.

[ ] An error (procedural or typographical) has been noted in volume _____, chapter _____, section _____, paragraph _____, on page _____.

[ ] Recommend in volume _____, chapter _____, section _____, paragraph _____, on page _____, be changed as follows: (Attach separate sheets if necessary.)

[ ] Recommend a change to National Policy in volume _____, chapter _____, section _____, paragraph _____, on page _____ as follows:

[ ] In a future change to this order, please cover the following subject (briefly describe what you want added):

[ ] Regional Handbook Standardization Representative recommendation:

[ ] I would like to discuss the above. Please contact me.

Submitted by: _____ Date: _____

Telephone Number: _____ Routing Symbol: _____

FAA.MAIL Address: _____

APPENDIX 3. HANDBOOK BULLETINS

This appendix contains all current Flight Standards handbook bulletins (HBAT) as of the publication of this change and will be updated periodically through the normal cycle of handbook changes. Inspectors must retrieve the latest handbook bulletins from the FAA.MAIL 8400.10 Bulletin Board and file them at the end of this appendix. When new handbook bulletins are issued on the Handbook Bulletin Board, a notice will be issued by FAA.MAIL. An updated listing of all current bulletins will be posted at the beginning of the 8400.10 Bulletin Board.

Handbook bulletins for Air Transportation (HBAT) are issued as interim guidance to FAA Order 8400.10, "Air Transportation Operations Inspector's Handbook." The material covered in these bulletins is intended to be incorporated into the handbook during the normal change cycle. Only bulletins that are current and in effect will be maintained electronically on the bulletin board.

The current change to 8400.10 is Change 10.

TABLE OF CONTENTS

BULLETIN	DATE	SUBJECT	PAGE
91-13	04-16-91	TCAS Industry Alert Bulletins Field Inspector Guidance	3-3
91-27	06-19-91	Cockpit Voice Recorder (CVR) and Preflight Procedures	3-5
91-32	08-19-91	Air Carrier Internal Evaluation Program	3-6
93-02	05-05-93	Operations Inspector Currency Requirements	3-10
93-03	06-07-93	Revised: Approving Federal Aviation Regulations (FAR) Parts 121 and 135 Training Programs	3-14
93-07	08-27-93	Operations Specifications (OpSpecs) Revision, Special Aircrew, Aircraft Authorization Minimums	3-16
93-10	10-25-93	Noise Abatement Departure Profiles Operations Specifications	3-17
94-02	01-31-94	Air Ambulance Operations Specifications: Revised	3-18
94-03	01-31-94	Operations Specifications (OpSpecs) Revision: Part 135 Operations in Ground Icing Conditions	3-19
94-06	04-20-94	Transition to All Computerized Airmen Knowledge Testing	3-20
94-08	05-12-94	Program Tracking and Reporting Subsystem (PTRS) Documentation of Action Required by Flight Standards Bulletins	3-22

TABLE OF CONTENTS—Continued

BULLETIN	DATE	SUBJECT	PAGE
94-09	05-20-94	Engine Change and Verification Flights for Extended Range Operation with Two-Engine Airplanes (ETOPS) - Guidance for ETOPS Operators	3-24
94-10	05-25-94	Crewmember Indoctrination Training and Reduction of Programmed Hours During Labor Unrest	3-25
94-11	08-12-94	Airman Certification (Type Rating) Procedures for Certain Derivative or Related Aircraft Types	3-27
94-12	10-05-94	Use of Flight Control Guidance Systems for Automatic Landing Operations Other Than Categories II and III	3-30

HANDBOOK BULLETIN FOR AIR TRANSPORTATION (HBAT) 91-13
TCAS INDUSTRY ALERT BULLETINS -- FIELD INSPECTOR GUIDANCE
PUBLISHED 04-16-91

A. Background. The Federal Aviation Administration (FAA) Program Office and the Air Transport Association (ATA) Separation Task Force established the "Event Analysis Team" as a quick response group comprised of members from within the FAA, private sector, and pilot unions who have extensive Traffic Alert and Collision Avoidance System (TCAS) experience. This team is responsible to act quickly to any TCAS event that affects "Safety of Flight." Government agencies, manufacturers, and user groups will receive TCAS Industry Alert Bulletins in a timely manner whenever a "Safety of Flight" issue is detected during the implementation period of TCAS.

(1) TCAS Industry Alert Bulletins will recommend corrective actions and/or required operational procedures relevant to urgent, "Safety of Flight" issues. The FAA will distribute these bulletins via E-mail. Principal inspectors will ensure that their respective carriers are notified of these bulletins.

(2) Any information relevant to TCAS Industry Alert Bulletins from inspectors, flight crews, or controllers that might assist in determining additional corrective action and operational procedure changes should be provided to ARINC Research Corp., 2551 Riva Road, Annapolis, MD 21401, Attn: Mr. Gary Gambarani, MS 1-115, (301) 266-4588; or Federal Aviation Administration, 800 Independence Avenue, S.W., Washington, DC 20591, Attn: Mr. Bill Petruzel, AFS-450, (202) 267-7209/FTS 267-7209.

(3) TCAS Industry Alert Bulletins will be retained behind this handbook bulletin for further reference.

B. Further Information. Action Notice A8430.66, "TCAS Training," and Handbook Bulletin 91-10, Flight Inspector's Handbook, Order 8400.10, "Guidance for Field Inspectors During TCAS Implementation Period" contain additional guidance and information. Any questions regarding this bulletin may be addressed to AFS-210, through the Regional Flight Standards Division.

TCAS INDUSTRY ALERT BULLETIN #1

Issued by the TCAS "Event Analysis Team," February 25, 1991

The FAA TCAS Program Office and the ATA Separation Assurance Task Force established the "Event Analysis Team" as a quick response group comprised of members from within the FAA, industry, and pilot unions who have extensive TCAS experience. This team is tasked with the responsibility to react quickly to any TCAS event that affects "Safety of Flight." The TCAS Industry Alert Bulletin will be the vehicle by which government agencies, manufacturers, and user groups will be notified in a timely manner of urgent TCAS "Safety of Flight" issues and recommended corrective actions and/or required operational procedures during the TCAS implementation period. Each organization is requested to provide timely distribution to its members.

Any information requested from flightcrews and controllers to assist in determining required corrective action should be provided to ARINC Research Corp., 2551 Riva Road, Annapolis, MD 21401, Attn: Mr. Gary Gambarani, MS 1-115 via the TCAS Transition Program (TTP) Questionnaire available from your organization, or by any other available means. Mr. Gambarani can be reached at (301) 266-4588.

It is requested that all TCAS Industry Alert Bulletins be retained for reference.

Alert Event Number 91-1:

PROBLEM: In the past week, the TTP has received two completed pilot questionnaires that described TCAS encounters in which TCAS issued a "DESCEND" Resolution Advisories (RA) while the TCAS-equipped aircraft was at approximately 500 feel AGL, even though the TCAS system is designed to inhibit DESCEND RAs at 1,000 feet AGL. One RA occurred on final and the other RA occurred on departure. These are the only two reports of this problem in over 200,000 hours of TCAS operation.

ACTIONS BEING TAKEN: The TTP participants are actively reviewing all available data from these two events to determine the reason for TCAS issuing the DESCEND RA. The investigation will examine the design of the TCAS software, the implementation of the design by the avionics manufacturer, the interfaces between TCAS and other aircraft systems, and the presence of other aircraft in the vicinity when the RAs were issued. Once the cause of this problem is identified, fixes will be developed and implemented.

INTERIM ACTION/OPTIONS: After reviewing the initial reports, the TTP Event Analysis Team felt it was very important to provide the operators of TCAS equipment with the following guidelines for interim management of this anomaly.

1. A pilot may elect to operate in TA Only when established on final approach upon arrival and until communication is established with en route air traffic control on departure.

2. At the Captain's discretion, the TA/RA mode can be used during the approach or departure providing the crew is briefed that DESCEND RAs will not be followed below 1,000 feet AGL.

3. If a DESCEND RA is issued below 1,000 feet AGL, the airline TCAS coordinator or ARINC Research should be notified and a pilot questionnaire completed as soon as possible to allow all available data on the event to be collected. As a minimum, the following information is required: airline and flight number; aircraft nose or tail number; date and time of RA; location; altitude; and a brief description of the event.

HANDBOOK BULLETIN FOR AIR TRANSPORTATION (HBAT) 91-27 COCKPIT VOICE RECORDER (CVR) PREFLIGHT PROCEDURES PUBLISHED 06-19-91 NTSB NO. 90-70

A. BACKGROUND. Recently, numerous aircraft accident reports have revealed regular findings of poor CVR performance. This degradation of CVR performance can be greatly alleviated by better CVR maintenance and effective preflight check procedures.

B. ACTION. Principal operations inspectors (POI) shall bring the contents of this bulletin to the attention of their respective operators. POIs shall ensure that their operators' training programs and operations manuals adequately address the frequency of flightcrew CVR preflight checks and the preflight check procedures based upon the guidelines established by the manufacturer. The preflight procedures should include a check using headphones for CVRs having recording monitoring provisions.

As a minimum, these CVR checks should be accomplished on the first flight of the day and whenever a flightcrew change occurs during that day.

C. PTRS INPUT. POI's shall make a PTRS entry to record the actions directed by this handbook bulletin with each of their operators. The PTRS entry shall be listed as activity code number 1380 in section 1, and as code A831 in the "Primary/Key" column in section IV. POI's should use the comments section to record comments of interaction with the operators.

D. FURTHER GUIDANCE. Any questions or clarifications regarding this bulletin may be addressed to AFS-510.

HANDBOOK BULLETIN FOR AIR TRANSPORTATION (HBAT) 91-32
AIR CARRIER INTERNAL EVALUATION PROGRAM
PUBLISHED 08-19-91

A. BACKGROUND. The text of this handbook bulletin was issued July 29, 1990 as Action Notice A8430.65. This information continues to be valid and may be shared with industry as delays have been encountered in the issuance of the advisory circular that is discussed below.

B. ACTION. This handbook bulletin establishes procedures to facilitate the implementation of Compliance/ Enforcement Bulletin No. 90-6 issued on March 29, 1990. Additionally, inspectors should become familiar with the new definitions and procedures included in proposed Advisory Circular (AC) 120-XX entitled Air Carrier Internal Evaluation Programs.

The policy described in Compliance/Enforcement Bulletin No. 90-6 is designed to improve safety compliance by foregoing a civil penalty where a certificate holder promptly discloses to the FAA an apparent, inadvertent violation and takes prompt action satisfactory to the FAA to correct the violation and preclude its recurrence. Notwithstanding a certificate holder's failure to report a violation, this policy also provides that the nature and extent of a certification holder's voluntary remedial action may be considered in mitigation of any formal enforcement action otherwise appropriate.

The voluntary disclosure policy represents a major change in our enforcement policy and, consequently, has generated attention at the highest levels of the FAA and among certificate holders. The policy also provides principal inspectors with new and greater autonomy and flexibility in responding to certificate holder disclosures of infractions. In coordination with district office management, principal inspectors will determine all actions to be taken under the voluntary disclosure policy.

Some certificate holders already have made voluntary disclosures of infractions. We anticipate many more voluntary disclosures in the near future. An open sharing of findings and a cooperative, as well as advisory effort, in solving problems will promote greater aviation safety. Compliance/Enforcement Bulletin No. 90-6 and AC 120-XX suggest, but do not require, that disclosures to principal inspectors occur under a program of continuous, internal evaluation conducted by certificate holders. An Internal Evaluation Program, as described in AC 120-XX, should improve an air carrier's capability to regularly identify and correct any safety problems before, rather than after FAA inspections.

The procedures outlined in the advisory circular apply to certificate holders operating under Parts 121 and 135 of the FAR and encompass the following aspects of an air carrier's organization:

a. Maintenance;

b. Flight operations; and

c. Security.

The information that follows covers the procedures that inspectors and field agents shall follow when implementing the policy described in Compliance/Enforcement Bulletin No. 90-6. Any questions regarding the implementation of these procedures should be directed to the Field Programs Division, AFS-500, or Civil Aviation Security Division, ACS-100.

1. Principal Inspector Investigation Process

a. After initial notification by a certificate holder of a possible violation of the FAR, the principal inspector should undertake the following action:

(1) Make a record of the initial notification, i.e., a record of a telephone call.

(2) Forward a written response to the certificate holder acknowledging receipt of the initial notification (see the sample letter in Attachment A of Advisory Circular 120-XX). This acknowledgement must include the request for a written report and serves in lieu of a letter of investigation, provided the written report is completed in accordance with the voluntary disclosure reporting procedures and Appendix B of the Air Carrier Internal Evaluation Program advisory circular.

b. Assign an inspector/agent to the case.

(1) The assigned inspector/agent will assist the principal inspector in conducting a thorough investigation and in preparing an investigative package.

(2) The principal inspector may request that a geographic inspector be assigned to provide assistance in the investigation. When necessary, requests shall be handled through the appropriate regional office.

(3) The principal inspector will make the decisions associated with accepting the proposed fix and processing the case.

2. In opening a case for investigation, the principal inspector, or assigned inspector/agent at the direction of the principal inspector, shall accomplish the following:

a. Create an office file for the apparent violation.

b. Assign an enforcement investigative report (EIR) number.

c. Enter appropriate information into the enforcement information system (EIS).

d. Prepare a program tracking and reporting system (PTRS) report utilizing the administrative action codes 1733, 3732, and 5732 for operations, airworthiness, and avionics respectively. In the National Use block enter "ACIEP." A synopsis of the disclosure and the comprehensive fix must be included in the comment section. (Not applicable to security cases at this time.)

3. As a part of the ensuing investigation, the principal inspector, or assigned inspector/agent at the direction of the Principal inspector, shall accomplish the following:

a. Review the EIS/PTRS for similar violations. These data, relative to internal evaluation/voluntary disclosure, will be compiled as cases are entered into the PTRS.

b. Consult with certificate-holding district office (CHDO) management, regional specialists, regional counsel, and others when he/she deems appropriate.

c. Conduct an investigation in accordance with Order 2150.3A, Compliance and Enforcement Program, guidance to verify the following:

(1) The full extent or scope of the alleged violation.

(2) If possible, why or how the violation action occurred.

d. Obtain the certificate holder's written report that includes its analysis of the alleged violation and supporting objective evidence.

e. Include the certificate holder's report in the office file created for the alleged violation.

f. Provide the certificate holder with a formal acknowledgement of receipt of the written report.

g. Determine whether the objective evidence supports a violation of the FAR.

(1) If a FAR has not been violated, close the file with "No Action." When the principal inspector believes that systemic concerns (potential for noncompliance in the future) exist, assistance should be offered to the certificate holder in developing and implementing a comprehensive fix that addresses those concerns.

(2) If a FAR has been violated, decide whether administrative action in accordance with Compliance/Enforcement Bulletin No. 90-6 can be pursued or if legal enforcement action is necessary.

4. If the review of objective evidence verifies that a comprehensive fix is necessary, the principal inspector, or assigned inspector/agent at the direction of the principal inspector, shall accomplish the following:

a. Determine if the corrective steps outlined in the comprehensive fix and a time schedule for completion of a fix are acceptable.

b. If appropriate, issue a letter of correction, which includes a summary of the comprehensive fix and the completion schedule. A letter of correction can be issued even though the approved comprehensive fix has not been completed. A statement would be added to the letter of correction stating that if the fix is not completed as agreed, the case will be reopened and legal enforcement action may be pursued.

c. Monitor the implementation of the approved comprehensive fix.

5. A complete investigative package must include the following elements:

a. FAA Form 2150-5, Enforcement Investigative Report. This form shall be completed as normal with the exception that source code 29 in block 22 will be used.

b. Inspector's summary and analysis. The analysis shall be included in Section B of the package. Unless a case is reopened for legal enforcement action, the analysis typically completed under Section D will not be necessary.

c. Immediate notification documentation record, i.e., record of telecon.

d. Certificate holder's written report.

e. Copies of appropriate objective evidence, particularly perishable material such as documents that need not be retained by the certificate holder.

f. Copy of the principal inspector's letter of correction.

g. Statement of follow-up investigation by the FAA confirming that the certificate holder's comprehensive fix was satisfactorily implemented.

6. Principal Inspector and Geographic Inspector/Field Agent Coordination.

a. Under this guidance, certificate holders are instructed to disclose apparent violations to its appropriate principal inspector. However, in a case where a representative of the certificate holder makes its initial disclosure to an inspector/field agent, the inspector/field agent must promptly notify the principal inspector of the disclosure. The principal inspector will then provide official acknowledgement for the initial notification to the certificate holder.

b. Before proceeding with legal enforcement action, a geographic inspector/field agent should determine from the principal inspector whether a certificate holder has previously disclosed an infraction that may have a bearing on the inspector/agent's enforcement case. Additionally, results from surveillance performed by a geographic inspector/field agent may prove valuable to the principal inspector in cases where a certificate holder is in the process of implementing a comprehensive fix.

7. Certificate Holder's Failure To Complete A Comprehensive Fix.

a. If the certificate holder reports, or the FAA discovers, that an approved comprehensive fix was not completed, the principal inspector should reopen the case and proceed with legal enforcement action.

b. If the certificate holder initiates a change to a comprehensive fix that is not yet satisfactory and the FAA does not concur with the change, the case should be reopened. The principal inspector may wish to consult with FAA technical specialists before making a final decision.

8. Recording and Tracking Voluntary Disclosure Packages.

a. The original investigative package should be maintained at the CHDO or with the principal security inspector.

b. A copy of all closed investigative packages must be forwarded through appropriate regional division to regional counsel for filing. Closed cases will not be reopened except as stated in 7(a).

c. A case may be closed prior to the completion of corrective steps outlined in the comprehensive fix. In these situations, a copy of the statement of follow-up investigation must be sent through the appropriate regional division to regional counsel when the fix has been determined to be satisfactorily completed.

d. As the focal point for information related to the Air Carrier Internal Evaluation Program/voluntary disclosure, the principal inspector should ensure that all PTRS report entries are made. The PTRS record shall be closed when the letter of correction is issued. If the comprehensive fix has not yet been satisfactorily completed, a PTRS surveillance record should be opened to track accomplishment.

9. Subsequent Violations/Reports.

a. A subsequent violation promptly disclosed to the FAA by the certificate holder following a satisfactory fix would be considered a new problem. The closed case would not be reopened.

b. If, at a later date, a satisfactory fix does not prevent the finding from recurring, the FAA will not take action against the findings incorporated in the original disclosure.

c. Actions taken by an airman which are independent of actions by the air carrier and which are violations of the basic regulations under which the airman serves (i.e., FAR Part 91 or 43) are not covered by this policy. However, consideration of any mitigating circumstances must be given when pursuing legal enforcement action.

10. Application to Airmen.

a. The policy set forth in Compliance/Enforcement Bulletin No. 90-6 applies to individual airmen operating under Parts 121 and 135 of the FAR when the following conditions are met:

(1) The apparent violation involves only FAR Part 121 or 135 and the action taken is part of an air carrier operation or procedure.

(2) The airman makes the first report of the apparent violation to the employing certificate holder.

(3) The infraction is promptly reported to the FAA.

b. When the above conditions are satisfied, the voluntary disclosure procedures covered in this handbook bulletin and the advisory circular should be applied in determining the type of corrective action to initiate.

11. Program Review and Analysis.

a. Appeals. As noted, all matters related to a certificate holder's voluntary disclosure shall be dealt with at the principal inspector level. However, problem resolution may include principal inspector consultation with system experts throughout the FAA (i.e., national resource specialists). If a problem cannot be resolved by a principal inspector, the appropriate FAA reporting chain will be followed.

b. Legal Reviews. Closed investigative packages may be reviewed by regional counsel to assure that the policy is correctly interpreted from a legal standpoint. Such reviews cannot, however, result in the reopening of any case that has been closed by a principal inspector.

c. Trend Analysis. All investigative packages generated by a voluntary disclosure will be reviewed by a central review function. The review is intended to provide feedback to industry and the FAA on trends identified as a result of the voluntary disclosure policy. This central clearinghouse also will provide program standardization. Analysis of closed investigative reports will help to determine what additional guidance is needed and whether national, regional, or local trends are occurring. In addition, we hope to provide the industry with de-identified reports of trends or problems that are uncovered in investigative reports, thereby encouraging the prompt identification and correction of potential deficiencies. Public safety will benefit from the sharing of such information.

We intend to continue National Aviation Safety Inspection Program inspections and our normal surveillance and legal enforcement programs. Aviation safety is best served by this additional policy which allows certificate holders to identify and correct their own instances of inadvertent noncompliance. Additionally, implementation of this new policy will promote the expending of time and resources in efforts to preclude the recurrence of noncompliance matters. We anticipate that our new policy of voluntary disclosure will strongly encourage air carriers to make internal evaluation a part of their everyday management process.

ORDER:	8400.10 and 8700.1
APPENDIX:	3
BULLETIN TYPE:	Joint Handbook Bulletin for Air Transportation (HBAT) and General Aviation (HBGA)
BULLETIN NUMBER:	HBAT 93-02, HBGA 93-01
BULLETIN TITLE:	Operations Inspector Currency Requirements
EFFECTIVE DATE:	05-05-93
TRACKING NUMBER:	N/A

---

1. PURPOSE. This bulletin amends guidance to general aviation operations inspectors and air transportation operations inspectors regarding the flight training requirements that must be met in order for those inspectors to perform aircraft type- specific job functions in an aircraft/simulator for general aviation and air transportation.

2. BACKGROUND. This bulletin contains interim guidance for inspectors and managers at all levels of Flight Standards for the management of flight training course quotas and the qualification of operations aviation safety inspectors. This guidance supplements guidance contained in Volume 5, Chapter 1, Section 1 of FAA Order 8400.10, "Air Transportation Operations Inspector's Handbook," and amends Volume 2, Chapter 1, Section 2 of FAA Order 8700.1, "General Aviation Operations Inspector's Handbook."

A. Definitions. In order to prevent misinterpretation of the guidance contained in this bulletin, Order 8400.10, and Order 8700.1, the following definitions are presented.

(1) First level supervisor. A first level supervisor is a supervisory aviation safety inspector assigned to duties that involve direct supervision of line inspectors.

(2) Flight crewmember. FAR Part 1 defines a flight crewmember as "a pilot, flight engineer, or flight navigator assigned to duty in an aircraft during flight time."

(3) Flight training. As used in this bulletin and in Order 8700.1, flight training is a Flight Standards-approved and numbered course that may include instruction in applicable regulations and procedures. The course may be given in an aircraft or in an FAA-approved simulator/training device.

(4) Job function. For an inspector, those aircraft type-specific responsibilities and duties or tasks, such as pilot certification or testing, identified in the official position description of Order 8400.10 or Order 8700.1.

(5) Line inspector. A line inspector is a non-supervisory aviation safety inspector assigned to a Flight Standards district office (FSDO), certificate management office (CMO), or aircraft evaluation group (AEG) in a work program involving airmen certification, check airmen functions, and surveillance events.

(6) Safety pilot. As used in this bulletin and in Orders 8400.10 and 8700.1, a safety pilot is a pilot seated at the controls, other than the pilot being checked, who is fully qualified in accordance with Part 91.109 of the Federal Aviation Regulations (FAR). (Example: an inspector conducting a certification flight check or proficiency check with the airman applicant utilizing a view-limiting device.)

(7) Staff inspector. A staff inspector is an aviation safety inspector assigned to a regional office, headquarters office, or the FAA academy.

B. Inspector Qualifications.

(1) Before performing airmen certification and/or testing functions, an inspector must have completed either the air carrier or general aviation indoctrination course, as appropriate to the certification task. The inspector must hold valid and appropriate airmen certificates and type ratings corresponding to the job function.

(2) An inspector conducting an airline transport pilot (ATP) practical test in a small rotorcraft need not have a type rating in that rotorcraft on his or her ATP certificate, but must possess full ATP privileges (i.e., without a visual flight rules (VFR) limitation) for rotorcraft and appropriate category and class ratings. An inspector holding an ATP with multiengine land or sea ratings may give ATP practical tests for single-engine land or sea ratings, as appropriate, provided the inspector holds the corresponding class rating (land or sea) at the commercial level.

(3) All inspectors must have satisfactorily completed the applicable on-the-job training (OJT) in accordance with FAA Order 3140.19, "On-the-Job Training (OJT) of Aviation Safety Inspectors."

C. Training Requirements. In order for an operations inspector to perform job functions requiring the inspector to act as a required flight crewmember or safety pilot, the inspector must have met the following criteria as appropriate.

(1) The inspector must meet the requirements of FAR 61.56, 61.57 and 61.58, as applicable to the aircraft used. The flight training course requirements of this bulletin do not supersede or contradict the requirements of FAR 61.58 with respect to aircraft certificated for more than one required pilot crewmember.

(2) If 12- or 24-month, as appropriate, flight/simulator training or proficiency checks are accomplished in the month before or the month after they were due, they are considered to have been accomplished in the month they were due. This 3-month period is the "eligibility period."

(3) Inspectors assigned to flight crewmember, safety pilot, or airmen certification duties in a simulator or aircraft, other than those requiring type ratings by type design, must complete one flight/simulator training course each 24 months in each aircraft category used for the job function.

(4) Inspectors assigned to flight crewmember, safety pilot, or airmen certification duties in a simulator, airplane, or rotorcraft requiring type ratings by type design, must complete at least one flight/simulator training course each 12 months in a type of aircraft for which that inspector is assigned. Flight/simulator training courses should be scheduled in rotation for those inspectors who are assigned to more than one aircraft requiring a type rating. However, these inspectors should not be scheduled for more than one course every 12 months in an aircraft category.

(5) Inspectors assigned to airmen certification duties in gyroplanes, gliders, or lighter-than-air categories of aircraft may satisfy the 24-month flight training requirements by completing a pilot-in-command (PIC) proficiency check in the appropriate aircraft category under the "FAA Aircraft Management Program," Order 4040.9D. Under these circumstances, if the inspector being checked in accordance with 4040.9D fails any of the required maneuvers or pilot operations required to complete the check, the person giving the check will give additional proficiency flight time and practice to the inspector during the course of the check. At the completion of a check where an inspector required additional proficiency flight time but was unsuccessful in completing the check, the person giving the check will forward a report to the manager requesting the flight check with the pertinent details of the check and a recommendation for any further action.

(6) Inspectors assigned to flight crewmember, safety pilot, or airmen certification job functions in turboprop airplanes must have completed the FAA Academy course, "Turboprop Initial Qualification," FAA Course No. 20056. This requirement does not apply to inspectors who hold a type rating in a turbopropeller-powered airplane. Regional Flight Standards divisions (RFSD's) may submit requests for a waiver to AFS-520 when an inspector has logged at least 200 hours as a pilot in a turbopropeller-powered airplane within the last 5 years.

(7) Inspector training and/or qualification requirements to conduct inspection and surveillance job functions other than those specifically addressed in this bulletin are contained in the inspector handbook appropriate to that job function.

D. Scheduling and Training Priorities. To allow the FAA to manage limited flight training resources, and in consideration of programmed training quotas, the following priorities shall be followed in allocation of flight training.

(1) Line inspectors assigned to airmen certification duties as a required flight crewmember/safety pilot will be scheduled for, and be given the FIRST AND HIGHEST PRIORITY for, flight/simulator training. RFSD's will reprogram training quotas to ensure that line inspectors who have not received recurrent flight/simulator training within the past 24 calendar months, or 12 months for inspectors assigned to aircraft requiring a type rating, are given the first priority for any flight training available in order of their last training date.

(2) First level supervisors and regional and headquarters staff inspectors will not normally be assigned to airmen certification duties. In the rare event that this becomes necessary, those inspectors will be given SECOND PRIORITY for any available training after all line inspectors have received the minimum flight training described in paragraph 2D(1) of this bulletin.

(3) Inspectors who have indicated an intention to retire or terminate their service within the 6 calendar months after the month in which their flight training is due should not be sent to flight training. Inspectors in this category may be placed on a waiver to this requirement for up to 6 months.

E. Letters of Authorization.

(1) If an application is received for a practical test in an aircraft for which a rated and current inspector is not avail- able, the RFSD may request from AFS-520 a letter of authorization (LOA) in lieu of a type rating for an inspector who is deemed best qualified in an aircraft with similar characteristics. This provision is limited to those cases in which an appropriately rated inspector is not available.

(2) The LOA must name the applicant(s) to be checked. Blanket authorizations to individual inspectors will not be issued.

(3) Inspectors issued such an LOA shall conduct the practical test from an approved forward observer's seat unless circumstances preclude it. In such cases, specific permission to conduct the practical flight test from a required flight crewmember seat must be granted in the LOA issued by AFS-520. An LOA authorizing the conduct of a practical test from a required flight crewmember seat will only be issued to an inspector who meets the appropriate currency requirements of FAR Part 61.

F. Inspector Status During Practical Tests.

(1) The inspector is not PIC of the aircraft during the practical test unless acting in that capacity for the flight, or a portion of the flight, or by prior arrangement with the applicant or other PIC. To administer a practical test for an ATP certificate or a class or type rating on that certificate, or to administer a Part 121 proficiency flight check, an inspector occupying a pilot seat must be fully qualified and current to act as PIC in that aircraft. If an inspector acts as a required flight crewmember during a practical test, that inspector must possess at least a valid third-class medical certificate.

(2) The inspector may observe the applicant's performance of autorotations to touchdown from the ground during certification practical tests in rotorcraft if the applicant is the sole occupant in the aircraft. Similarly, the inspector may observe, from the ground or another aircraft, the performance of aerial maneuvers by an applicant flying a single-control aircraft.

(3) During practical tests given on aircraft requiring a flightcrew of two or more, the inspector should give the practical test from the designated jump seat or place in the cabin from which the flight, crew coordination, and cockpit resource management can be adequately observed.

(4) If no jump seat is available, the inspector may exercise discretion in deciding which seat to occupy during the practical test. Aircraft seating configuration and the inspector's skills, limitations, recent experience, and qualifications should be considered. If the practical test is conducted at the ATP level, the requirements of paragraph 2F(1) of this bulletin must be observed.

(5) Any disagreements over the qualifications or experience of pilots occupying a pilot seat should be referred to the RFSD manager. Final decision shall be in accordance with pertinent law, regulation, and the Flight Standards Collective Bargaining Unit Agreement.

(6) Inspectors may observe free balloon flight tests from the ground, regardless of whether it is a single or multiplace balloon.

(7) If the inspector conducting a practical test assists an applicant during the test, for reasons other than maintaining the safety of the flight, such action would be disqualifying. Before beginning the practical test, the inspector should discuss these issues with the applicant as part of the overall practical test preflight briefing described in Order 8400.10, Volume 5, Chapter 1, Section 2 and in Order 8700.1, Volume 2, Chapter 1, Section 3.

G. Waiver Authority. RFSD's may request individual inspector waivers to the flight training requirements of this bulletin from AFS-520. The waiver will only be issued when the training has been requested but the courses were unavailable and a current and qualified inspector is not available. The waiver will be valid for a maximum of 6 months, and will not be reissued. Waivers are strongly discouraged, and will only be issued after all efforts to obtain the required training have been exhausted. If circumstances warrant the issuance of a waiver, the inspector must be granted sufficient official duty time, not to exceed 8 hours, to refresh himself or herself on aircraft systems and procedures. All waivers shall expressly prohibit the inspector from occupying a required flight crewmember seat while performing duties under the authority of the waiver. The waiver provisions of this paragraph apply to ALL aircraft.

H. Conduct of Regional Flight Training Courses. RFSD's should use regionally assigned FAA aircraft to the maximum extent possible to conduct recurrent flight training.

3. ACTION. Order 8400.10 Handbook Bulletin 91-33 dated 08/19/91 is cancelled. Order 8700.1, Volume 2, Chapter 1, Section 2 is cancelled.

4. INQUIRIES. This bulletin was developed by AFS-200, AFS-500, and AFS-800. Any questions regarding this information bulletin should be directed to AFS-520 (Training and Automation) at (703) 661-0333, extension 5125.

5. LOCATION IN HANDBOOK. The material covered in this bulletin will be incorporated by AFS-550 in future revisions of Orders 8400.10 and 8700.1. Until the new material is incorporated in the handbooks, inspectors should refer to this bulletin.

/s/
Edgar C. Fell

ORDER:	8400.10
APPENDIX:	3
BULLETIN TYPE:	Handbook Bulletin for Air Transportation (HBAT)
BULLETIN NUMBER:	HBAT 93-03
BULLETIN TITLE:	Revised: Approving Federal Aviation Regulations (FAR) Parts 121 and 135 Training Programs
EFFECTIVE DATE:	6-7-93
TRACKING NUMBER:	N/A

---

1. SUBJECT. This handbook bulletin replaces HBAT 92-09, "Approving FAR Parts 121 and 135 Training Programs," dated July 15, 1992. The original intent of the superseded bulletin remains unchanged: to provide direction and guidance to inspectors for reviewing and approving FAR Parts 121 and 135 training programs.

A. Handbook Guidance. In Change 1 to FAA Order 8400.10, "Air Transportation Operations Inspector's Handbook," Flight Standards Service published direction and guidance to help modernize, simplify, and standardize the process of developing and approving training programs (see volume 3, chapter 2). Since the guidance was published, Flight Standards Service has become increasingly aware that the new guidance has not had the intended effect. Both principal operations inspectors (POI's) and operators are confused about how to comply with the intent of the handbook's guidance. Instead of simplifying the process, in many cases, the process has become unduly cumbersome.

B. New Advisory Circulars (AC's). Two new AC's are being developed which will provide examples of training programs for Parts 121 and 135 operators. Publication and distribution of the two AC's are expected during 1993.

2. ACTION. POI's shall observe and adhere to the following direction and guidance:

A. Prior to Publication of the AC's.

(1) Inspectors may accept and grant approval for new training programs or revisions to existing programs that are not in the modular format.

(2) Inspectors should, however, encourage operators to submit new training programs or revisions to existing training programs in the modular format as described in 8400.10.

B. After the AC's Have Been Published.

(1) New training programs or revisions to existing training programs shall be accepted and approved by inspectors only in the modular format.

(2) Training programs having final approval need not be converted to the modular format if inspector surveillance shows them to be effective and safe.

(3) Training programs having initial approval need not be converted to the modular format and may be granted final approval if inspector surveillance shows them to be effective and safe.

(4) Training programs currently being prepared using other than the modular format may be accepted for approval consideration for up to 1 year after the effective date(s) of the AC's. After the two AC's have been in effect for 1 year, only training programs prepared using the modular format may be accepted for approval consideration.

3. INQUIRIES. This handbook bulletin was developed by AFS-210. Any questions regarding this bulletin should be directed to AFS-510 at (703) 661-0333 extension 5032.

/s/
Edgar C. Fell

ORDER:	8400.10
APPENDIX:	3
BULLETIN TYPE:	Handbook Bulletin for Air Transportation (HBAT)
BULLETIN NUMBER:	HBAT 93-07
BULLETIN TITLE:	Operations Specifications (OpSpecs) Revision, Special Aircrew, Aircraft Authorization Minimums
EFFECTIVE DATE:	8-27-93

---

1. PURPOSE. This bulletin provides instruction to principal operations inspectors (POI) for issuance of revised OpSpecs to operators authorized to use Special Aircrew, Aircraft Authorization Minimums.

2. BACKGROUND. Recently the Flight Standards National Field Office (FSNFO), AFS-500, has issued a Handbook Bulletin titled "Special Aircrew, Aircraft Authorization Required" CAT I Minimums. This bulletin sets forth the conditions that an operator must meet prior to the use of Category I Special Minimums. Presently the Operations Specifications Subsystem software will not provide the approval subparagraph C53f. Until the software can be upgraded, it will be necessary for POI's to make manual revisions to the OpSpecs.

3. POI ACTION. POI's having certificate management responsibility for operators requesting approval for use of Category I, Special Minimums should contact the operations branch of their Regional Flight Standards Division to obtain instructions and the specific pages necessary to issue the OpSpecs subparagraph for Special Aircrew, Aircraft Authorized Minimums.

4. INQUIRIES. This bulletin was developed by AFS-500. Any questions or comments concerning the information in this bulletin should be directed to AFS-510 at (703) 661-0333 ext. 5017.

5. LOCATION IN HANDBOOK. The material covered in this handbook bulletin will be incorporated by AFS-550 in volume 3, chapter 1, section 5, of FAA Order 8400.10, Air Transportation Operations Inspector's Handbook. Until the handbook is updated, inspectors should make written reference to this bulletin in the margin next to the indicated paragraph.

/s/
Edgar C. Fell

ORDER:	8400.10
APPENDIX:	3
BULLETIN TYPE:	Flight Standards Handbook Bulletin for Air Transportation (HBAT)
BULLETIN NUMBER:	HBAT 93-10
BULLETIN TITLE:	Noise Abatement Departure Profiles Operations Specifications
EFFECTIVE DATE:	10-25-93

---

1. PURPOSE. This bulletin contains instructions for principal operations inspectors (POI) concerning issuance of operations specifications (OpSpecs) to operators authorized to conduct noise abatement departure profiles (NADP).

2. BACKGROUND. HBAT 93-09 contains direction and guidance concerning heavy airplane operators' compliance with approved NADP's. Presently, the Operations Specifications Subsystem (OPSS) software will not provide the approval paragraph C68. Until the software can be upgraded, it will be necessary for POI's to make manual revisions to the OpSpecs.

3. ACTION. POI's having certificate management responsibility for operators requesting approval for use of approved NADP's should contact the regional Flight Standards operations branch to obtain the instructions and the specific pages necessary to issue the OpSpecs for approval.

4. INQUIRIES. This bulletin was developed by AFS-510. Any questions or comments concerning the information in this bulletin should be directed to AFS-510 at (703) 661-0333, extension 5017.

5. EXPIRATION. This bulletin will expire upon its incorporation into FAA Order 8400.10, Air Transportation Operations Inspector's Handbook.

/s/
Edgar C. Fell

ORDER:	8400.10
APPENDIX:	3
BULLETIN TYPE:	Flight Standards Handbook Bulletin for Air Transportation (HBAT)
BULLETIN NUMBER:	HBAT 94-02
BULLETIN TITLE:	Air Ambulance Operations Specifications: Revised
EFFECTIVE DATE:	01-31-94

---

1. PURPOSE. This bulletin provides revised instructions for principal operations inspectors (POI) for issuance of operations specifications (OpSpecs) to operators authorized to conduct air ambulance operations. FSIB 93-37, Air Ambulance Operations Specifications, is canceled.

2. BACKGROUND.

A. Change 6 to FAA Order 8400.10, Air Transportation Operations Inspector's Handbook, contains a new chapter, Air Ambulance Operations (volume 4, chapter 5). FSIB 92-33 was issued (and extended by FSIB 93-37) to provide instructions for the issuance of OpSpecs paragraphs A23 and A24, which authorize air ambulance operations. However, paragraph A23 conflicts with the paragraph number assigned for ground deicing/anti-icing operations. Therefore, this bulletin provides instructions for issuance of approval for all air ambulance operations as paragraph A21.

B. Presently the Operations Specifications Subsystem (OPSS) software will not provide the current paragraph A21, Air Ambulance Operations. Until the software can be upgraded, it will be necessary for POI's to make manual revisions to the OpSpecs.

3. ACTION. POI's having certificate management responsibility for operators conducting air ambulance operations should contact the operations branch of their Regional Flight Standards Division (RFSD) to obtain the instructions and the specific pages necessary to issue or reissue, as appropriate, the OpSpecs in accordance with this HBAT.

4. INQUIRIES. This HBAT was developed by AFS-500. Any questions or comments concerning this bulletin should be directed to AFS-510 at (703) 661-0333, extension 5017.

5. LOCATION IN HANDBOOK. This HBAT will provide the necessary information for issuing OpSpecs until the OPSS has been upgraded. Until that time, inspectors should make a written reference to this bulletin in the margin in volume 4, chapter 5, section 1, paragraph 1337 of FAA Order 8400.10.

/s/
Edgar C. Fell

ORDER:	8400.10
APPENDIX:	3
BULLETIN TYPE:	Flight Standards Handbook Bulletin for Air Transportation (HBAT)
BULLETIN NUMBER:	HBAT 94-03
BULLETIN TITLE:	Operations Specifications (OpSpecs) Revision: Part 135 Operations in Ground Icing Conditions
EFFECTIVE DATE:	01-31-94

1. PURPOSE. This bulletin provides instruction for principal operations inspectors (POI) for issuance of OpSpecs concerning Part 135 operations in ground icing conditions.

2. BACKGROUND.

A. Amendments to the deicing regulations of Part 135 of the Federal Aviation Regulations (FAR) will become effective on January 31, 1994. These regulations set forth requirements concerning the operation of airplanes in ground icing conditions. Presently the Operations Specifications Subsystem (OPSS) software will not provide the appropriate approval paragraph A23. Until the software can be upgraded, it will be necessary for POI's to make manual revisions to the OpSpecs.

B. Paragraphs A23 and A24 have previously been used for approving Air Ambulance operations. Prior to revising an Air Ambulance operator's OpSpecs to address the requirements of this bulletin, the operator's OpSpecs must be revised in accordance with HBAT 94-02, "Air Ambulance Operations Specifications: Revised."

3. POI ACTION. POI's having certificate management responsibility for Part 135 operators should contact the operations branch of their Regional Flight Standards Division (RFSD) to obtain instructions and the specific pages necessary to issue the appropriate OpSpecs paragraphs concerning operation of airplanes in ground icing conditions.

4. INQUIRIES. This FSIB was developed by AFS-500. Any questions or comments concerning the information in this bulletin should be directed to AFS-510 at (703) 661-0333, extension 5017.

5. LOCATION IN HANDBOOK. This HBAT will provide the necessary information for issuing OpSpecs until the OPSS has been upgraded. Until that time, inspectors should make a written reference to this bulletin in the margin in section 2 of volume 4, chapter 8 (Change 9).

/s/
Edgar C. Fell

ORDERS:	8300.10, 8400.10, and 8700.1
APPENDIX:	3
BULLETIN TYPE:	Joint Handbook Bulletin for Airworthiness (HBAW), Air Transportation (HBAT), and General Aviation (HBGA)
BULLETIN NUMBER:	HBAW 94-01, HBAT 94-06, and HBGA 94-03
BULLETIN TITLE:	Transition to All Computerized Airmen Knowledge Testing
EFFECTIVE DATE:	04-20-94

---

1. PURPOSE. This Flight Standards Handbook Bulletin contains guidance concerning new procedures relative to airmen knowledge testing.

2. RELATED MATERIAL. Inspection and surveillance procedures are covered in FAA Order 8080.6, "Conduct of Airmen Knowledge Testing Via the Computer Medium."

3. BACKGROUND. Flight Standards has identified conversion to computerized testing as an effective approach in providing enhanced quality oversight of designees, while reducing the burden on the diminishing field inspector and clerical work force. This system of knowledge testing is also the most effective approach in meeting major cost reduction initiatives while meeting customer demands for quality service.

The development of computerized testing has progressed from the 1989 prototype introduction to a system with capacity and sophistication to satisfy the needs of Flight Standards Service.

Computerized testing now administers all 62 test types in more than 420 locations, and new test locations are routinely being added.

In view of this background, Flight Standards Service will begin a movement toward a completely computerized knowledge testing environment upon publication of this bulletin.

4. POLICY STATEMENT. Renewal of written test examiners with low activity or initial designation of new written test examiners is contrary to the policy established in this bulletin, and any deviation must be approved by the Regional Flight Standards Division.

5. INSPECTOR ACTION. The movement towards a computerized knowledge testing environment necessitates that inspectors discontinue the following upon publication of this bulletin:

-- Renewals of designations for examiners who administer five or less exams per year

-- Designations of new written test examiners

-- Approvals of additional testing authority to designated written test examiners

-- Approvals of new written test examiner representatives or reassignings of representatives to other written examiners

6. REMOTE OFF-LINE TESTING ASSISTANTS (ROFTA). Computer Testing Designees (CTD) will identify and request approval of ROFTA's from AFS-630. AFS-630 will approve or disapprove the ROFTA candidate after contacting the flight standards district office that has jurisdiction of the geographic area in which the ROFTA candidate is located to determine the suitability of the appointment.

7. ROFTA TESTING IN REMOTE OR ISOLATED AREAS. Computer generated written tests will be available for applicants in isolated or remote areas. The Computer Testing Designee (CTD), Aviation Business Services at 1-800-947-4228 will serve as the initial contact for applicants requesting computer generated tests for isolated or remote areas. This service provides the assurance that all airmen applicants can be served after the current written testing system has been completely transitioned to the all computerized system.

Aviation Business Services will coordinate computer generated written test applications with AFS-631. AFS-631 will return all approved applications to the CDE for completion of a test preparation package. The CTD will mail the written test package to an FAA-approved ROFTA who will administer the test and upon completion will return the test package to the CTD for grading. This form of testing will be approved only under unusual circumstances.

8. FIELD FEEDBACK. Flight Standards District Office inspection data covering computer testing centers will be provided to AFS-630 via the Program Tracking and Reporting Subsystem (PTRS).

As the Flight Standards Service moves toward improving public service more efficiently, it is important to receive feedback from field personnel.

9. UNUSUAL TESTING CIRCUMSTANCES. Methods of administering written examinations, when warranted during unusual circumstances, will be provided by AFS-630 at (405) 954-4149.

10. LOCATION IN HANDBOOK. The material covered in this bulletin will be incorporated into the inspector handbooks as follows: volume 2, chapter 29 of FAA Order 8300.10, ''Airworthiness Inspector's Handbook''; volume 5, chapter 1 of FAA Order 8400.10, ''Air Transportation Operations Inspector's Handbook''; and volume 2, chapter 21 of FAA Order 8700.1, ''General Aviation Operations Inspector's Handbook.'' Until the new material is incorporated, inspectors should make written reference in the margin next to the indicated paragraph.

11. INQUIRIES. This bulletin was developed by AFS-630. Any questions or comments concerning this bulletin should be made by letter to the FAA Operations Support Branch, AFS-630, P.O. Box 25082, Oklahoma City, OK 73125 or by facsimile to (405) 954-4748.

/s/
Edgar C. Fell

ORDER:	8300.10, 8400.10, and 8700.1
APPENDIX:	3
BULLETIN TYPE:	Joint Handbook Bulletin for Airworthiness (HBAW), Air Transportation (HBAT), and General Aviation (HBGA)
BULLETIN NUMBER:	HBAW 94-02, HBAT 94-08, and HBGA 94-04
BULLETIN TITLE:	Program Tracking and Reporting Subsystem (PTRS) Documentation of Action Required by Flight Standards Bulletins
EFFECTIVE DATE:	05-12-94

---

1. PURPOSE. This bulletin establishes the process by which all Flight Standards field offices must accomplish and document surveillance, inspection or certificate management actions required by Flight Standards Air Carrier Operations Bulletins (ACOB), Flight Standards Handbook Bulletins (HBB), and Flight Standards Information Bulletins (FSIB).

2. BACKGROUND. Recently, several audits were conducted of our field facilities wherein findings have indicated that our field inspectors are not receiving and, in some cases, not following action items specified in the subject policy bulletins. Furthermore, it appears that, in some cases, inspectors have not received, accomplished and/or documented their action(s) in the PTRS if required by the bulletin or directive.

3. ACTION. Effective immediately, all regional Flight Standards division managers shall implement a system to ensure that sufficient quantities of electronically transmitted and printed policy documents are distributed to all personnel in each office. Emphasis should also be placed on the importance of reading and accomplishing all required actions specified in policy bulletins.

A. Field Office Management Responsibilities and Distribution. Each Flight Standards field office manager shall maintain a master copy of all pertinent policy bulletins (ACOB, HBB, FSIB). Each master policy bulletin shall be signed and dated by the field office manager upon receipt. If a bulletin is electronically transmitted, the field office manager shall ensure that sufficient hard copies of each policy bulletin are reproduced and given to each inspector assigned responsibility for an operator or certificate holder affected by the policy or procedure. If an action is called for in the bulletin, the field office manager and supervisors are responsible for ensuring that the appropriate action is completed by each inspector assigned to their supervision.

B. PTRS Close-Out. Upon completion of any action required by an ACOB, HBB, or FSIB, all inspectors who have responsibility for accomplishing those actions shall take the following steps:

(1) Complete a PTRS record by using PTRS Code 1381, 3381, or 5381: Technical Administration/Directive Action Accomplishment. This PTRS code is new and shall be established upon publication of this bulletin.

(2) Enter the document number of the ACOB, HBB, or FSIB into the "National Use" field of the PTRS record. For example, ACOB Chapter 9, Bulletin 94-01, would be entered as "ACOB99401." Inspectors should note that the "National Use" field has a maximum of 9 characters. Entry of HBB's or FSIB's would be accomplished as follows: FSIB for Air Transportation 94-03 (FSAT 94-03) would be entered in the "National Use" field as "FSAT9403"; and Air Transportation HBB 94-04 (HBAT 94-04) would be entered in the "National Use" field as "HBAT9404." Inspectors should note in each example that no spaces are used in the actual PTRS computer entry.

(3) Complete one record for each affected operator and make appropriate comments in the inspector's opinion area concerning the methods used by the operator for compliance.

(4) Complete any action required by policy bulletins within 120 days of receipt, unless otherwise stated in the bulletin. If an operator does not comply with a non- regulatory action item, the inspector's comments should thoroughly document the operator's inaction or comment with respect to the actions required by the bulletin.

C. Regional Division Audit and Reporting.

(1) Each regional Flight Standards division shall provide, by June 30 and December 31 of each calendar year, a report on a review of each district office's compliance with this bulletin to the Flight Standards National Field Office, AFS-500. AFS-500 shall compile the reports and summarize them for the Director of Flight Standards Service, AFS-1. The report shall include the following:

-- The names of any operators for which required action was not completed

-- The reason action was not completed

-- The names of any operators who elected not to adopt non- regulatory recommendations and the reason(s) the action was not adopted

(2) Flight Standards Divisions shall follow up and ensure that any operator who has not received notification of Flight Standards directive material is so notified of the requested actions as soon as possible.

4. LOCATION IN HANDBOOK. The material covered in this HBB shall be incorporated by AFS-550 in FAA Orders 8300.10, "Airworthiness Inspector's Handbook" in volume 4, chapter 8; 8400.10, "Air Transportation Operations Inspector's Handbook," in volume 1, chapter 4, section 1; and 8700.1, "General Aviation Operations Inspector's Handbook," in volume 1, chapter 6. Until the new material is incorporated, inspectors should make written reference to this bulletin in the margins next to the indicated paragraphs.

5. INQUIRIES. This HBB was developed by AFS-550. Any questions or comments regarding this bulletin should be directed to AFS-540 at (703) 661-0333.

/s/
Edgar C. Fell

ORDER:	8300.10 and 8400.10
APPENDIX:	3
BULLETIN TYPE:	Joint Handbook Bulletin for Airworthiness (HBAW) and Air Transportation (HBAT)
BULLETIN NUMBER:	HBAW 94-03 and HBAT 94-09
BULLETIN TITLE:	Engine Change and Verification Flights for Extended Range Operation with Two-Engine Airplanes (ETOPS) - Guidance for ETOPS Operators
EFFECTIVE DATE:	05-20-94

---

1. SUBJECT. The purpose of this handbook bulletin is to provide information on verification flights to principal inspectors who have certificate responsibilities for FAR Part 121 operators that have an established ETOPS operation or are anticipating application for that authority.

2. BACKGROUND. AC 120-42A, "Extended Range Operation with Two-Engine Airplanes," provides guidance for ETOPS operational approval. This approval includes procedures for the resolution of certain airplane/engine discrepancies through the requirement of verification flights. These flights are an attempt to identify potential human factor or mechanical errors prior to ETOPS operation. ETOPS operators should have verification flight procedures described in their supplemental maintenance program for events involving propulsion system shutdown, engine or major engine module change, primary system failure, and for certain adverse trends or prescribed events. In the case of an engine change or a major engine module change, the requirement of a verification flight is in addition to the normal test cell and ground run procedures.

3. ACTION. As defined in AC 120-42A, extended range operation commences at a point on the outbound route that is one hour flying time (in still air, at normal cruising speed with one engine inoperative) from the nearest suitable airport. It is permissible to designate the period of time from airport departure to entry into the ETOPS environment as a maintenance verification flight, in combination with a regularly scheduled ETOPS revenue flight, provided the verification phase is documented as satisfactorily completed upon reaching the ETOPS entry point.

It is important to note that when this type of ETOPS verification flight is conducted, written procedures must be in place to ensure the flightcrew is fully briefed prior to dispatch concerning the event and/or the maintenance performed that necessitates the verification flight. Appropriate maintenance personnel should convey to the flightcrew the specific observations and/or actions required of them during the verification portion of the flight as well as the method to be used to properly record the satisfactory completion of that verification flight. All flightcrew observations and/or actions must be completed upon entering the ETOPS portion of the flight.

The functions and the role of the centralized maintenance control department are important and should be clearly defined in the operator's ETOPS manual, particularly the responsibilities pertaining to propulsion system shutdowns, engine changes, primary system failures, verification flights, and certain adverse trends or other prescribed events.

4. LOCATION IN HANDBOOK. The material covered in this handbook bulletin shall be incorporated by AFS-550 in FAA Orders 8300.10, "Airworthiness Inspector's Handbook," in volume 2, chapter 82, and 8400.10, "Air Transportation Operations Inspector's Handbook," in volume 3, chapter 9. Until the new material is incorporated, inspectors should make written reference to this bulletin in the margins next to the indicated paragraphs.

5. INQUIRIES. This bulletin was developed by AFS-330. Any questions or comments concerning this bulletin should be directed to AFS-330 at (202) 267-3440.

/s/
Frederick J. Leonelli

ORDER:	8400.10
APPENDIX:	3
BULLETIN TYPE:	Flight Standards Handbook Bulletin for Air Transportation (HBAT)
BULLETIN NUMBER:	HBAT 94-10
BULLETIN TITLE:	Crewmember Indoctrination Training and Reduction of Programmed Hours During Labor Unrest
EFFECTIVE DATE:	05-25-94

1. PURPOSE. This handbook bulletin (HBB) contains information and direction for principal operations inspectors (POI) about material appropriate for air carrier crewmember indoctrination training courses and the policy for reduction of programmed training hours during labor disputes.

2. BACKGROUND. Recent labor disputes highlighted possible problems with crewmember training. To determine what problems may exist, the Flight Standards Service reviewed the flight crewmember and flight attendant training curricula of major airlines. Review of Federal Aviation Administration (FAA)-required crewmember indoctrination course curricula showed that some curricula included material not pertinent to the Federal Aviation Regulations (FAR), to flight conduct, or to aviation safety. Labor disputes also highlighted the importance of managing the reduction of programmed hours during labor disputes.

3. DIRECTION.

A. Indoctrination Training.

(1) It is important that the 40 programmed hours of indoctrination training contain only subjects that are pertinent to the safety assignments of crewmembers. The guidance in FAA Order 8400.10, "Air Transportation Operations Inspector's Handbook," regarding indoctrination course material training will be revised. Specifically, indoctrination training should include the following:

-- Duties and responsibilities of crewmembers

-- Appropriate provisions of the FAR

-- Contents of the certificate holder's operating certificate and operations specifications

(2) Any review of these requirements should ensure that subjects are related to the safety responsibilities of the crewmembers. Subject areas such as company history, company organization, and scheduling may be credited toward programmed hours if they show a direct relationship to the FAR, to flight operations, or to flight safety. Employee compensation/benefits and contracts, grooming, uniform regulations, pass benefits, and other similar subjects are not appropriate in the 40 programmed hours of FAA-approved indoctrination training.

B. Curriculum Subjects. Subjects such as company organization and description should be changed to company organization and operating philosophy as it relates to the way the company controls its flight operations and the crewmembers' role in those operations. An example is provided by the subject of general forms, records, and administrative procedures. This subject should only be part of the 40 hours of indoctrination training if the records are related to the operation of the flight. For example, mechanical discrepancy forms would be related to the operation of the flight and could be included in the course. Employee standards and rules of conduct should only be part of the 40 programmed hours as this discussion relates to safety.

C. Daily Training Hours. To ensure that students have adequate time to assimilate subject material, attend to personal needs, and receive adequate rest, the daily hours of training activity should be limited to 10 consecutive hours in any 24-hour period. At least 1 hour and 30 minutes of this 10 consecutive hours should be devoted to breaks that are distributed throughout the 10 hours; for example, one 15-minute break in the morning, 1 hour for lunch, and one 15-minute break during the afternoon. Thus, a student could only accumulate 8 1/2 programmed hours of training during that period of 10 consecutive hours.

D. Reduction of Training Hours. Many air carrier training program indoctrination courses may be reduced by 1, 2, or several hours depending on whether the subject matter can be covered adequately in accordance with the standard in FAR 121.405. (FAR 121.405 states, in part, that the Administrator should consider the training aids, devices, methods, and procedures listed in the certificate holder's curriculum as stipulated in FAR 121.403 that increase the quality and effectiveness of the teaching/learning process.) However, the programmed hours for indoctrination training should not be reduced below 32 hours. These 32 hours should contain subjects listed in the FAR and follow the policy as outlined above.

E. Revisions After Final Approval. In accordance with FAR 121.405(e), the FAA may require revisions, including additional hours, to a training program that has been granted final approval. POI's should work with their assigned certificate holders to identify any areas, including number of programmed hours, that need to be changed and to obtain a firm schedule for the completion of these changes.

F. Specific Changes to FAA Order 8400.10. Handbook guidance regarding indoctrination training will be modified. Specifically, the charts on pages 3-205 and 3-210 and paragraph 377 (all references are in Change 1) showing company history, contracts, and employee compensation and benefits as subjects acceptable for inclusion in indoctrination training will be changed to reflect the policy as outlined above. Additional guidance will be provided to limit the daily hours of training to 10 hours or less. Paragraph 371 on page 3-205 will also be changed so credit will be given only to those subjects that are easily transferred from one air carrier to another. Typically, this would include knowledge of the FAR, but very little else. Additional credit could be given for the quality of the training, including instructor to student ratio, teaching aids, size of class, and other factors, as listed in FAR 121.401(d) and 121.405(d). The handbook discusses flight attendant indoctrination training. The flight attendant training chapter will be changed to emphasize that subjects covered in indoctrination training shall pertain to the safety duties of all crewmembers.

G. Training Program Changes During Periods of Labor Unrest. POI's should be aware of the national attention usually focused on an air carrier during a period of labor unrest, bankruptcy, or other newsworthy periods of stress for the carrier. FAA approval for changes during these periods may give an impression of unusual support for the carrier. Therefore, any differences in training programs should be coordinated with AFS-200 through AFS-500.

4. ACTION. POI's are requested to ensure that their assigned certificate holders' crewmember (both flightcrew and flight attendants) indoctrination training includes the following:

-- Only appropriate subjects during the credited programmed hours

-- At least 32 programmed hours, even if hours were reduced in accordance with the standard specified in FAR 121.405(d)

NOTE: Any programs that may be considered for approval during a labor dispute are to be brought to the attention of AFS-200 and AFS-500 before initial or final approval is granted.

5. INQUIRIES. This HBB was developed by AFS-200. Any comments or suggestions concerning this bulletin should be addressed to AFS-203 at (202) 267-3735.

6. LOCATION IN HANDBOOK. The material covered in this HBB will be incorporated by AFS-550 in volume 3, chapter 2, section 3, paragraph 371, of the 8400.10 handbook. Until the handbook is updated, inspectors should make written reference to this bulletin in the margin next to the indicated paragraph.

/s/
David R. Harrington

ORDER:	8400.10
APPENDIX:	3
BULLETIN TYPE:	Handbook Bulletin for Air Transportation (HBAT)
BULLETIN NUMBER:	HBAT 94-11
BULLETIN TITLE:	Airman Certification (Type Rating) Procedures for Certain Derivative or Related Aircraft Types
EFFECTIVE DATE:	8-12-94

1. PURPOSE. This bulletin contains guidance to be used by inspectors who are conducting airman certification using the information provided in Advisory Circular (AC) 120-53, "Crew Qualification and Pilot Type Rating Requirements for Transport Category Aircraft Operated Under FAR Part 121," and in the Flight Standardization Board (FSB) report applicable to a specific aircraft. This bulletin also describes the procedures to be used for conducting type rating checks for certain derivative or related aircraft types (such as B747 pilots applying for type ratings in a B747-400 or A320 pilots applying for type ratings in an A340 following completion of an approved cross crew qualification (CCQ) program).

2. BACKGROUND. AC 120-53 was published in May of 1991 to standardize airman certification credits. AC 120-53 describes standards that determine which credits are appropriate for an aircraft type and its derivative related types of aircraft, and how these credits should be applied during the certification process. Operators (or training centers) with an approved FAR Part 121 program, including FAA approved operator differences requirements (ODR) tables (see the applicable FSB report) may seek credit for type rating certification of airmen who have completed the specified program. Inspectors may then permit credit during the oral examination or practical test in accordance with FSB report provisions.

3. REFERENCES. For airman certification situations where previous credit is not a factor, volume 5 of FAA Order 8400.10, Air Transportation Operations Inspector's Handbook, should be used. It specifies airman certification procedures which include conduct of type rating checks, use of job aids, processing of documentation, and other related items. This information, in addition to the information contained in the applicable FSB report (such as type rating designations, maneuvers, and information) contains the necessary guidance to accomplish airman certification.

A. FAR Parts 61 and 121 Requirements. In accordance with the FSB report, most operators treat qualification in aircraft such as the B747-400 separately from earlier B747 variants. In such instances, the FAA addresses checking for the B747 and B747-400 separately and independently. For example, a complete check is accomplished in accordance with applicable FAR Parts 61 and 121 requirements in either variant group. A similar situation is likely for some crews who will be flying the A340. A340 pilots who qualify through a full course (without previous A320 experience and without seeking credit) will need to complete full checks in accordance with FAR Part 61, and if applicable, FAR Part 121, Appendix H. In such cases, the procedures in FAA Order 8400.10 address the situation adequately.

B. Exceptional Instances. An applicant may qualify for credit based upon prior qualification, when a "differences" based qualification between variants or related types is permitted by the FSB. For example, the differences from a B757 to a B767 were determined to be negligible, and an airman qualified in a B767 subsequently received a B757 type rating without further demonstration.

C. Credit For Previous Qualification. Credit for previous qualification may range from complete credit (such as B757 to B767), to significant credit (such as A320 to A340), to very limited credit (such as B747 to B747-400). When credit is permitted, the applicant meets the certification requirements by combining credit for items previously completed in the aircraft in which the airman is qualified, and the additional items accomplished for the new variant or related type.

(1) Credit Determination by the FAA. The FAA determines if credit is permitted and how that credit applies to airman certification for each specific aircraft type, variant, or related type through the associated FSB report.

(2) FSB Report. The FSB report is primarily intended for aircrew program managers (APM), aircrew program designees (APD), FAA airman certification inspectors, principal operations inspectors (POI), and check airmen. When issued, the reports are available through either the aviation safety analysis system (ASAS) or from an FSB chairman. An FSB chairman can be located in the assigned FAA aircraft evaluation group (AEG). Reports are available for the majority of aircraft that are used in air carrier operations. The reports may be made available to interested operators, check airmen, and APD's.

D. Credit Applicability. When credit does apply, sections 6.6 and 10 of AC 120-53 address how airman certification credits or constraints may be applied to a particular type, variants, or related aircraft types. When combined with the information in the pertinent FSB report (typically sections 2, 3, 4, 5, 7, and 10) and the ODR tables approved for that operator by the POI, inspectors and check airmen should have adequate information to determine what (if any) credits may be allowed during an additional type rating certification of an applicant.

4. FAA INSPECTOR AND APD AIRMAN CERTIFICATION PROCEDURES. In instances where credit has been permitted by the FSB and the FAA, approved ODR tables are used, and an airman has been qualified in accordance with those tables, an airman applicant may be issued an appropriate additional type rating upon completion of the items specified in the "checking" column of the ODR tables. The applicant may be credited for other items by previous qualification in the base aircraft. This is applicable only to airmen qualified in accordance with an FAA-approved program (for example, POI-approved ODR tables meeting FSB and AC 120-53 provisions).

A. Differences Credit. To obtain differences credit permitted by the FSB during airman certification, an airman must be trained and checked in accordance with a program specifically approved for a particular FAR Part 121 operator or training center. The airman must have successfully completed original qualification and received a type rating in the base aircraft, and have been trained in accordance with the FSB and ODR provisions for the variant or related type aircraft for which the check is to be conducted.

B. Time Limits. Unless specified as a condition of the ODR tables there are no constraints/requirements between the time that an airman is initially qualified (or receives a proficiency check) in the base aircraft, and the time required to complete the training and checks in the variant or related aircraft type.

Unless approved by the POI, applicants should take the type rating practical test within 60 days of completing the training specified in the FSB and ODR for the variant or related type aircraft. For new aircraft entering initial FAR Part 121 service, the FSB determines schedules and any additional requirements that may relate to the issuance of Letters of Competency, or Temporary Certificates. Multi-phase type rating checks in the new aircraft will be accomplished in accordance with volume 5, chapter 1, section 1, paragraph 17, of FAA Order 8400.10 and FAR Parts 61 and 121.

Oral examinations should focus on pertinent ODR table items. While any topic may be examined, inspectors may allow credit for areas common to the base aircraft.

C. Checks. Checks should be conducted in accordance with the FSB report and provisions of the approved ODR tables for that operator that are applicable to the designated aircraft.

(1) Levels C, D, and E Checking Items. The items listed in the FSB report and ODR tables should be addressed using at least one of the following methods: training device, simulator, or aircraft (as appropriate to the situation). Each of Level C, D, or E items shown in the checking column of the ODR tables should be addressed during the practical test. Items may be completed separately, combined as appropriate, or included within other items at the discretion of the person conducting the check.

(2) Other Checking Items. Checking items (other than those at Level C, D, or E) and any other pertinent FAR Part 61 or 121 items may be addressed at the discretion of the FAA inspector (or APD). If not performed, items may be credited based on previous demonstration during the oral exam, or completion during initial qualification in the base aircraft.

D. Testing Procedures. Inspectors or APD's should refer to the guidance in volume 5 of 8400.10 and the Practical Test Standards for the oral and practical test(s). However, items in the Test Standards that are not required by the ODR tables may be credited based on the applicants previous qualification in the base aircraft.

Credit is permitted for any item in the Test Standards which is not specifically required by the ODR tables. If a multi-segment check is to be completed, credit may be indicated by marking a "C" next to the appropriate item.

(1) Testing Discretion. Inspectors retain the discretion to test any area referenced by the FAR if there is a doubt as to the competency of the airman or about the adequacy of the program being used to prepare the applicant.

(2) Failure of the Test. If the applicant fails the test, then the inspector should document the events that were failed and require retesting. Failure of the test has no effect on qualification in the base aircraft. Repeated failure of tests by different applicants should be reported to the POI for possible remedial action regarding the approved program. These procedures are primarily intended for variants or related types identified as having Level E (checking) differences in the FSB report and operator's ODR tables (such as the B747/B747-400 and the A320/A340). For other programs having different checking levels (each less than Level E), requirements are described in the respective FSB report.

NOTE: Operations inspectors who are not familiar with an operator's or training center's approved ODR tables should coordinate with the pertinent Certificate-Holding District Office (CHDO), POI, or APM regarding applicable checking provisions before conducting checks using these procedures.

(3) B747-400 Type Rating Checks. Inspectors who conduct B747-400 type rating checks using approved ODR tables which credit previous B747 qualification and experience should note that an additional B747-400 aircraft check is not typically necessary. Qualification can be completed with a Level E check (an example would be when using an approved simulator) because credit is permitted for the earlier successful B747 qualification demonstration. This is the case regardless of whether a FAR Part 121, Appendix H program is used or not.

(4) A340 Type Rating Checks. Inspectors or APD's conducting A340 type rating checks should note that check and credit items based on ODR tables are applicable only to those crews previously qualified in the A320 "who have completed an approved ODR program" (cross crew qualification (CCQ)). Applicants who do not complete an approved ODR program must be given full checks in accordance with FAR Parts 61 and 121, and checking credit is not appropriate, regardless of previous qualification.

(5) Completion of FAA Form 8710-1. FAA Form 8710-1, Airman Certificate and/or Rating Application, dated 7-92, should be completed in accordance with standard instructions. Most applications, even when reflecting credits allowed by the FSB and ODR tables, will have the routine entries completed (such as the Completion of the Required Test block, the Instructor's Recommendation block, and the Evaluation Record... block). However, in some instances where prior qualification credit is permitted (such as when no aircraft check is necessary), the application form may have pertinent entries in various blocks (such as Evaluator's Record...Aircraft Flight Check...) marked as

"NOT APPLICABLE." Other designations described in FSB reports may also be used on FAA Form 8710-1. (These procedures are effective until release of a new version of Form 8710-1.) Upon distribution of the new form, appropriate instructions will be provided.

5. INQUIRIES. This handbook bulletin was developed by AFS-210. Any questions or comments concerning this bulletin should be directed to the Air Carrier Training Branch AFS-210, at (202) 267-3718.

6. LOCATION IN HANDBOOK. The material covered in this handbook bulletin will be incorporated by AFS-550 into volume 5, chapter 1, section 1, paragraph 13 of FAA Order 8400.10. Until the handbook is updated, inspectors should make written reference to this bulletin in the margin next to the indicated paragraph.

/s/
David R. Harrington

ORDER:	8400.10
APPENDIX:	3
BULLETIN TYPE:	Handbook Bulletin for Air Transportation (HBAT)
BULLETIN NUMBER:	HBAT 94-12
BULLETIN TITLE:	Use of Flight Control Guidance Systems for Automatic Landing Operations Other Than Categories II and III
EFFECTIVE DATE:	10-05-94

1. PURPOSE. This HBAT contains information for air carriers to ensure that the operators and flightcrews are familiar with both FAA and certificate holder guidance concerning disturbances to aircraft Automatic Flight Control Guidance Systems (AFCGS) while conducting automatic landings (autolands) in other than Category (CAT) II/III weather conditions. Recent questions indicate that there is a need to review existing guidance concerning these operations.

2. BACKGROUND.

A. Common Practices. It is a common practice for air carriers to conduct AFCGS approaches and/or autoland operations when the runway visual range (RVR) is at or below RVR 4,000. It is also common for carriers to conduct these operations during CAT I or better weather conditions to satisfy maintenance, training, or reliability program requirements. To achieve the necessary autoland rate, some percentage of these autolands are conducted at runways that are approved for CAT I operations.

B. Successful Autoland Dependencies. The successful outcome of any AFCGS autoland is dependent on the performance of the aircraft AFCGS and the performance of the ground-based instrument landing system (ILS). The course structure and the integrity of an ILS can be compromised when protection of the ILS critical areas cannot be assured. The localizer is particularly sensitive due to its larger signal volume in the airport area. Surface and airborne traffic and stationary vehicles, temporarily parked in these critical areas can create a deflection in, or a disturbance to, the ILS signal. The AFCGS will respond to this interference in a manner dependent upon the effect the interference has on the ILS signal characteristics and the control methods of the AFCGS. Observed AFCGS responses to ILS interference to date range from no effect to a deviation from the runway centerline after touchdown.

3. ILS CRITICAL AREA PROTECTION. Flight inspection criteria, integrity monitor alarms, ILS antenna designs and associated critical areas are established for all CAT I, II and III ILS's. Current ILS localizer and glide slope critical areas are described in FAA Order 6750.16B, "Siting Criteria for Instrument Landing Systems," Change 2. Airport operators are responsible for installing and maintaining appropriate signs and markings delineating taxi lanes, hold lines, and no parking areas associated with these ILS critical areas. Critical area signing and marking are contained in Advisory Circulars 150/5340-18C and 150-5340-1, respectively.

A. Air Traffic Operations.

(1) Flight Procedures. The current edition of FAA Order 7110.65, "Air Traffic Control," paragraph 3-84, specifies air traffic procedures for ILS critical area protection. In general, the runway's appropriate CAT I, II, or III critical area is restricted for all aircraft and vehicle operation whenever any of the following conditions exist:

1) the reported ceiling is less than 800 feet
2) the visibility is less than 2 miles

3) an aircraft on the ILS approach is inside the outer marker (OM) or fix used in lieu of the OM, except a preceding aircraft approaching the same runway or another runway may pass over or through the area while landing, taking off, or exiting the runway.

(2) Ground Procedures. In addition, vehicles or aircraft operations are not authorized in or over the area when an arriving aircraft is inside the middle marker when conditions are less than 200 feet and/or RVR 2000. The entire longitudinal axis of the preceding aircraft must be clear of the CAT III critical area (approximately 250 feet either side of centerline) before the aircraft on the ILS approach, or an autoland approach, reaches the middle marker (MM) or 200 feet above ground level (AGL).

B. Limitations. While it may appear to be desirable to completely restrict critical areas from all surface traffic, this is not generally feasible since normal access to and from the runway, terminal areas, and ramp may necessitate movement through these areas. In general, the localizer critical area for CAT II/III airports/ runways extends along the runway approximately 250 feet on either side of centerline. CAT II/III critical area dimensions are based on the assumption that the entire longitudinal axis of the aircraft/vehicle is clear of this area. Aside from necessary ancillary components, ILS critical areas would need to be established in order to conduct operations in CAT II/III weather conditions at an ILS airport/runway currently limited to CAT I operations.

C. Serving a CAT II/III Airport/Runway. The commissioning, periodic flight inspection, and facility maintenance of an ILS serving an airport/runway with a published CAT II/III instrument approach includes an analysis of the ILS performance along the runway through rollout to confirm that the ILS facility will support CAT II/III operations, as appropriate.

D. Serving a CAT I Airport/Runway. The commissioning, periodic flight inspection, and facility maintenance of an ILS facility serving a CAT I airport/runway does not include an analysis of the ILS performance inside the runway threshold or along the runway. However, a number of CAT I instrument approach facilities have sufficient signal characteristics to support AFCGS autoland operations to CAT I minima. Operations specifications paragraph C61b(2) allows the operator to make this assessment.

NOTE: The Airman's Information Manual (AIM), paragraph 1-10, provides guidance to pilots when conditions are such that protection of the ILS critical areas are not required and an arriving aircraft advises it will conduct a "Coupled," "CAT III," "Autoland" or similar phrased operation.

4. ISSUANCE OF OPERATIONS SPECIFICATIONS.

A. Paragraphs C59 and C60. Air Carrier operations specifications paragraphs C59 and C60 are issued to the certificate holder to authorize CAT II and III, respectively. All CAT III and certain CAT II operations are predicated on the use of AFCGS for autoland.

B. Paragraph C61. When requested by the certificate holder, Operation specifications paragraph C61 is issued to authorize the use of the AFCGS autolands in accordance with FAR Section 121.579(c) or FAR Section 135.93(d) for other than CAT II and III operations. Guidance for the issuance of Operation specifications paragraphs is contained in Volume 4 of FAA Order 8400.10, "Air Transportation Operations Inspector's Handbook."

NOTE: Authorization of any AFCGS autoland operation requires that the operator's approved training curriculum include training on autoland operations and that the autoland equipment is properly certified and maintained.

5. POLICY. When requested by the certificate holder, operations specifications paragraph C61 has been and will continue to be issued for AFCGS landing operations in accordance with FAR Section 121.579(c) or FAR Section 135.93(d) for other than CAT II or III. POI's for air carriers who have been issued any one or more of operations specifications paragraphs C59, C60, or C61 are requested to contact their operators and ensure that their method of assessing CAT I runways for autoland and their approved training curriculum are consistent with the above referenced guidance. The operator should have training on autoland operations and documentation that the autoland equipment is properly certified and maintained. Air carriers with questions regarding the suitability of certain CAT I ILS runways for conducting autolands should submit a request to AFS-400 through their assigned POI.

NOTE: Air carrier flightcrews are reminded to remain vigilant for upset to the ILS, with resulting unexpected flight control movements, when conducting autolands on any category ILS when critical area protection is not assured by air traffic control. Pilots should be prepared to immediately disconnect the autopilot and take appropriate action should unsatisfactory AFCGS performance occur.

6. INQUIRIES. This handbook bulletin was developed by AFS-410. Any questions or comments concerning this bulletin should be directed to the Operations Section of AFS-410 at (202) 267-7211.

7. LOCATION IN HANDBOOK. The material covered in this handbook bulletin will be incorporated by AFS-200 into volume 4, chapter 2, section 3 of FAA Order 8400.10. Until the handbook is updated, inspectors should make written reference to this bulletin in the margin next to the indicated paragraph.

/s/
David R. Harrington

☆ U.S. GOVERNMENT PRINTING OFFICE: 1995 - 617-753 - 1302/81567

For sale by the U.S. Government Printing Office
Superintendent of Documents, Mail Stop: SSOP, Washington, DC 20402-9328
ISBN 0-16-042628-6

ISBN 0-16-042628-6
90000
9 780160 426285