FAA-E-1041e
April 9, 1968
SUPERSEDES
FAA-1041d, 9/10/62
AMEND. 1, 7/10/63

DEPARTMENT OF TRANSPORTATION
FEDERAL AVIATION ADMINISTRATION SPECIFICATION

MOLDED CONNECTORS, CABLE ASSEMBLIES AND CONNECTION PINS

1. SCOPE.

1.1 Scope. - This specification sets forth the requirements for molded connectors, for cable assemblies, consisting of connectors integrally molded to single or multi-conductor cables, and for connection pins used in Approach Lighting, Visual Approach Slope Indicator and Runway End Identifier Systems.

2. APPLICABLE DOCUMENTS.

2.1 FAA specifications. - The following specifications of the issue in effect on the date of invitation for bids or request for proposals, shall form part of this specification and are applicable to the extent specified herein.

CAA-701	Cable, Electrical, Synthetic Rubber Insulated
AC 150/5345-7	Underground Electrical Cables for Airport Lighting Circuits

2.2 Military specifications. - The following Military specification, of the issue in effect on the date of the invitation for bids or request for

proposals, forms part of this specification.

MIL-C-4921	Cable, Power, Electrical, Airport Lighting

2.3 Other publications. - The following publications, of the issue in effect on the date of the invitation for bids or request for proposals, form part of this specification and are applicable to the extent specified herein.

American Society for Testing and Materials specifications

B-16	Free-cutting Brass Rod, Bar and Shapes for use in Screw Machines
B-301	Tellurium Copper Rods
D-353	Natural Rubber Performance Insulation for Wire and Cable, 60°C Operation
D-574	Ozone Resisting Insulation for Wire and Cable
D-753	General Purpose Neoprene Sheath for Wire and Cable
D-755	Synthetic Rubber Insulation for Wire and Cable, 60°C Operation
D-2240	Method of Test for Indentation Hardness of Rubber and Plastics by Means of a Durometer

(Copies of this specification and of the above referenced FAA specifications and drawings and single copy of the Military specification may be obtained from the Contracting Officer in the office issuing the invitation for bids or requests for proposals. Requests should cite the invitation for bids, request for proposal, or contract involved or other use to be made of the requested material. Mail requests for multiple Military specifications, if found acceptable, will be forwarded by the Contracting Officer to a Military Supply Depot for filling; hence, ample time should be allowed. Information on obtaining copies of ASTM standards may be provided by the American Society for Testing and Materials, 1916 Race Street, Philadelphia, Pennsylvania 19103.)

3. REQUIREMENTS.

3.1 General. - All items covered by this specification shall be designed and fabricated to meet all physical and electrical requirements stated below.

3.2 Functional requirements. - The cable assemblies, connectors, and connection pins furnished under this specification shall be required to join single or multi-conductor cables to equipment or serve as substitutes for fabricated splices or permit direct plug-in of cables into equipment. The

mechanical connections required between the various plugs and receptacles must result in good electrical connections and provide watertight joints for installation in air or underground as stated in paragraph 3.4.

3.3 Contractor's furnished equipment. - Equipment to be furnished by the contractor shall be complete in accordance with all applicable specification requirements and shall include items listed below which may be procured collectively or individually in quantities stated in the contract schedule. These items may be as follows:

(a) Single-conductor or multi-conductor Cable Assemblies. These shall be referred to by the number of conductors, their AWG size, the length, this specification and the applicable Figure number for the connector required. (See Figures 1a through 5e, attached.)

(b) Single-conductor Double-End Receptacle connectors. These shall be in accordance with Figure 6a.

(c) Connection Pins. The connection pins shall be required in accordance with Figure 6b.

3.3.1 Services furnished by the contractor. - The contractor shall provide the services in obtaining component parts he must fabricate into the finished product, and he shall provide complete test facilities, instruments and tools required for inspection and testing. In addition, he shall provide packing services and arrange for shipping as directed by the Contracting Officer.

3.4 Service conditions. - All items listed in this specification shall be able to provide dependable continuous service outdoors and indoors under the following conditions.

3.4.1 Environmental conditions. - Performance under the conditions listed below shall be in accordance with all applicable requirements of this specification.

(a) In air - continuously exposed to sunlight, to salt-laden air and to air polluted by chemical vapors.

(b) Directly buried in earth adjacent to runways where concentrations of water, acid, alkalines, oil, jet fuel and gasoline are likely to be present.

(c) At any ambient temperature from -55°C to +55°C.

(d) In locations requiring resistance to heavy abrasion.

3.4.2 Watertightness. - The molded compound shall adhere securely to all component parts within the connectors and to the insulation and sheath of the cable so that the units are watertight when plugged together and that separation between compound and internal parts will not occur during the molding operation or when handled in a normal manner during installation and servicing. The resulting compound shall not be hard or brittle, but shall

be sufficiently elastic to permit convenient insertion of mating connectors or cable, and to maintain a permanent watertight joint.

3.4.3 Stress conditions. - The method of molding connectors to cables shall be such that the conductors and wire connections are not subjected to undue stresses which may cause rupture of wire strands during molding and installation. The bond between the cable insulation, sheath and connectors shall be sufficiently strong to withstand a pull of at least 75% of the tensile strength of the largest conductor wire within. External ridges or protuberances may be used on the surface of the connector pins and sockets (3.6.4) to be enveloped with the molding material, to insure good adherence of the molding material in order to meet the bonding stress requirements.

3.4.4 Hardness. - The connector body material after molding shall have a hardness value ranging from 55 to 70 as measured in accordance with ASTM specification D-2240.

3.4.5 Interchangeability. - All parts furnished under a single procurement shall be manufactured to such tolerances that will permit interchangeability of any part with a similar part under the single contract or with a similar part procured under another contract where the specified tolerances were met.

3.5 Materials. - Materials shall be as specified herein. When materials are not specifically designated, those used shall be of the best commercial quality and entirely suitable for the purpose.

3.5.1 Properties of molding compound. - The plug and receptacle portions of the cable assemblies and the cable connectors shall be enveloped with a molding material consisting of insulation and sheath in either of the two forms specified below.

3.5.1.1 Separately applied insulation and sheath. - The insulation fully enclosing the pins and sockets shall conform to ASTM specification D-755 for synthetic rubber on all 600 V connectors and shall be in accordance with D-574 (ozone resistant) on all 5 kV connectors. The sheath shall be a synthetic rubber compound meeting the requirements of ASTM specification D-753 for 600 V connectors and, in addition, shall be ozone resistant for all 5 kV connectors. The sheath shall be not less than 3/64 inch thick and shall adhere securely to the insulation around the pins and sockets. At the option of the manufacturer, ozone resistant insulation and sheath may also be supplied on all 600 V connectors (ASTM specification D-574).

3.5.1.2 One homogeneous compound serving as insulation and sheath. - This compound may comprise the body, molded so as to fully enclose the pins and sockets of the connectors. In the event a homogeneous compound is used, it shall meet all electrical and physical test requirements of this specification and ASTM specifications D-353, D-753 and D-755 for 600 V connectors, and, in addition, shall be ozone resistant for all 5 kV connectors. At the manufacturer's option, all 600 V connectors may also be ozone resistant.

3.5.2 Connector pin and socket material. - The pins and sockets of all connectors shall be made of brass meeting the minimum requirements of ASTM specification B-16 for half-hard tempered brass and having a conductivity of at least 26% IACS (International Annealed Copper Standard), except the 1/4 inch pin (3.5.3) which shall be tellurium copper. In lieu of brass, high copper alloys suitable for the purpose which meet or exceed the electrical and physical requirements for brass as specified may be used.

3.5.3 Cable connection pin material. - The connection pins depicted in Figure 6b shall be made of hard-tempered tellurium copper in accordance with ASTM Specification B-301, conductivity of 90% IACS or higher at 20°C (68°F).

3.6 Cable assemblies.

3.6.1 General. - Cable assemblies shall consist of one or more connectors attached to a length of cable. The connectors shall be with pins or sockets as specified by the appropriate figure number of this specification. The plug and receptacle portions of the cable assemblies shall be molded according to the dimensions and shapes shown in the applicable figures. However, the exact shape of connectors may differ from that shown, but dimensional tolerances and all mating dimensions and requirements shall be strictly adhered to. The mating surfaces shall be concentric about the axis of the connector, and shall be smooth, firm and free of all blemishes. The finished surface of the body shall be smooth and firm throughout, without pits, cracks, blisters, and the like. Molding ridges shall be smooth and even with the outside connector body for a distance of at least 1" back from outside mating edge of each plug and receptacle to permit application of watertight layer of tape over each joint during installation or servicing.

3.6.2 Molding material. - The molding material of the connector shall be as specified in paragraph 3.5.

3.6.3 Leads. - Except for the SO cord permitted by paragraph 3.6.3.2, the cable leads to be used to fabricate the single or multi-conductor cable assemblies shall be ozone resistant and shall be as specified below. The jacket of the cable shall tightly adhere to the insulation.

3.6.3.1 Single conductor cable assemblies. - The Figure 1a and 1b cable assemblies shall use 5 kV cable conforming either to FAA specifications CAA-701, Type 1A or AC 150/5345-7, or to specification MIL-C-4921, at the manufacturer's option.

3.6.3.2 Multi-conductor cable assemblies. - Multi-conductor cables used in these assemblies shall use cable conforming to specification CAA-701, Type 1A or commercial type SO service cord, all round-lay except when flat-lay is specified in the contract. Hygroscopic fillers shall not be permitted in the cable construction.

3.6.3.3 Cable diameters. - The outside diameter of two conductor cables shall be within the range of 0.555 inch to 0.625 inch. The O.D. range for three conductor cables shall be 0.620 - 0.685 inch. The diameter of the five conductor cables required for cable assemblies which will be part of equipment procured under other specification or contract, shall be specified by the manufacturer of the equipment on which they shall be used. One exception is the 5 conductor, Figure 5b, cable assembly in which the cable shall be within the O.D. range of 0.750 to 0.860 inch. When the 1 and 2 conductor cables are used as component parts of isolation transformers, manufactured under Specification FAA-1055, the diameter of these cables shall be optional as long as all other requirements of this specification are met.

3.6.3.4 Conductor stranding. - Conductors in single or in multi-conductor cables shall be stranded. The number of strands shall be at least 19.

3.6.3.5 Wire bonding. - Each conductor shall be mechanically and electrically bonded to a metal pin or socket (3.6.4) which shall be molded into the connector body. A solid metallic barrier shall be between the socket portion and the hold for securing the wire to prevent entrance of moisture to the conductor. Care should be exercised in stripping the wire insulation to avoid nicking or cutting the conductors. The wire connection shall be accomplished through the use of a properly designed compression type tube at the cable end of the pins and sockets, and by the application of a matching compression tool so that the resulting connections are mechanically and electrically secure. For wire gage No. 8 and for wires with larger diameter, soldered brass connections may be used in lieu of the compression-type connection. All connections shall be capable of withstanding a pull of 50% of the maximum allowable tensile strength of the connecting wire. No weakening of the wire shall be caused by the connection process. When soldering is employed in making wire connections, it shall be performed with non-corrosive flux. Loose strands or cut strands shall be cause for rejection.

3.6.4 Connector pins and sockets. - The connector pins and sockets shall conform to the dimensions shown on the applicable figures in this specification.

3.6.4.1 Pins. - The design of the plugs shall be such that the pins will be positioned perpendicular to the face of the plugs by the molding compound, and so secured within the compound that:

(a) On multi-conductor plugs, the space between the ends of any two pins will not be less than 1/8 inch when the pins are pinched together with a force of 6 pounds 1/2 inch out from the face of the plug. The space between the ends of any two pins will not be greater than 9/16 inch when pulled apart with a force of 6 pounds applied 1/2 inch out from the face of the plug.

(b) On the 1/C plugs, a force of 10 pounds applied to the pin in any direction 1/2" out from the face of the plug will not result in any appreciable separation of pin and compound. The pin shall return to its original position when the force is removed.

3.6.4.2 Sockets. - All sockets shall be slotted and spring loaded to insure a lasting, positive electrical contact for mating male pins regardless of the number of insertions or withdrawals during normal service life. Sufficient contact area shall be provided within the sockets to comply with the voltage drop requirements in paragraph 3.6.4.3. Evidence of pitting or corrosion build-up which would be detrimental to the normal life of the connector shall be cause for rejection. Spring loading shall be achieved by means of an exterior spring-metal wrap of copper beryllium over the slotted socket sleeve. The wall thickness of the sockets shall be sufficient to safely carry the rated current continuously; however, the minimum wall thickness shall be .030 inches. The outer surface of the metal sleeves may be grooved or otherwise deformed to secure required adhesion of the compound as long as such deformations do not reduce the cross section of the sleeve material to less than .02 square inches. A thin sleeve of vulcanized rubber may be placed over all slots in the socket to prevent seepage of compound into the socket during molding and which, itself, shall not flow into the socket slots under molding pressures. If a flat spring-metal wrap is provided over the socket sleeve to achieve the required spring loading and this metal wrap effectively closes all slots, the rubber sleeve may be omitted, provided that the insulation resistance requirements of this specification can be fulfilled. Care shall be taken to prevent entrance of rubber into the interior of the metal socket.

3.6.4.3 Voltage drop across contacts. - The maximum permissible voltage drop across the mated contacts, when tested in accordance with paragraph 4.3.4.1 of this specification, shall not exceed the values given in Table "A" below.

TABLE "A"

Pin Size	Maximum Voltage Drop Across Contacts
0.092 inch	4.6 Millivolts at 10 amperes
0.124 inch	4.6 Millivolts at 15 amperes
0.124 inch	6.8 Millivolts at 20 amperes
0.155 inch	6.0 Millivolts at 20 amperes
0.249 inch	7.5 Millivolts at 25 amperes

3.6.5 Marking. - Each assembly shall be permanently marked by molding into the connector body the manufacturer's name or trade-mark and the type or style number, if any. Each assembly shall also be marked with this specification number and the corresponding specification figure, e.g., FAA-E-1041e, Figure 1a, etc. Identification markings shall not be placed closer than 1 inch from the outside mating edge of the plugs or receptacles in order to permit a smooth surface for taping, and to permit reading after taping.

3.6.6 Protective caps and plugs. - Protective caps or plugs shall be furnished for all connectors for physical protection during handling and storage. These protective covers shall not be required to meet any insulation tests, but in each case they shall be secured to the connector body with a wrap of 3/4 inch wide, 10 mil plastic electrical tape to insure watertightness and to prevent loss during handling. Caps and plugs may be of the same compound as the connectors or may be of other material suitable for the purpose. For

cable assemblies having a connector on only one end of the cable, a waterproof seal, consisting of 3/4 inch wide, 10 mil plastic electrical tape shall be applied to the exposed cable end for the protection from elements during shipment and storage. As a substitute, an easily removable protective coating formed by dipping the cable ends in a liquid plastic material which when dry will form a waterproof seal as described above, may also be used.

3.6.6.1 Caps. - The mating part of the protective cap shall be approximately equal in diameter to the mating surface of the molded plug. Its construction shall be such that the outside diameter is approximately equal to the maximum outside diameter of the connector body. The cavity shall be of sufficient depth so that no compression of the pins takes place within the cap when in place.

3.6.6.2 Plugs. - The mating diameter of the protective plug shall be approximately equal to that of the receptacle connector mating cavity, so that no stretching of the connector will take place and such that no deformation will result in storage. The maximum outside diameter of the plug shall approximately match that of the receptacle connector body to permit smooth taping and insure maximum protection of mating surfaces.

3.7 Connection pins. - Connection pins shall conform to Figure 6b of this specification as to contour and dimensions. The pin shall be such as to provide positive and permanent contact, without cracking or breaking, when crimped to wire with a high compression hand press designed for this application. The exterior surface of the pins shall be smooth, cylindrical, without burrs, humps or depressions. The wire hole in the pin and the outer surface in a cross section at any point shall be circular and concentric about the pin axis. The hole shall be clean, smooth, and of specified depth to permit easy and full insertion of the #8 AWG solid conductor.

3.8 Workmanship. - Workmanship shall be in accordance with the highest grade commercial practices covering this type of work.

4. QUALITY ASSURANCE PROVISIONS.

4.1 General. - Unless otherwise specified in the invitation for bids or as otherwise modified in a subsequent contract, the Government will undertake inspection of all equipment specified herein at the prime equipment contractor's plant. Unless otherwise specified, the Government will not undertake source inspection of components and materials, but will require vendor certification that such components and materials were designed and manufactured to meet the requirements of applicable specifications whether established herein or, in the absence thereof, as established in the prime equipment contractor's purchase orders. However, the component parts fabricated into the finished products shall be tested as part thereof and must meet the requirements specified for the finished product. All tests shall be accomplished by the contractor in the presence of a Government Representative, unless waived by the Contracting Officer. The Government may waive witnessing of all, or any portion, of the required tests specified herein, and as an alternate, may require the contractor to furnish certified test data for

those tests on which inspection was waived. (Note: When cable assemblies fabricated under this specification are to be made part of other equipment such as sequenced flashing light assemblies, series/series transformers, etc. procured by the Government under another contract, the manufacturer of the cable assemblies will be required to furnish to the purchaser certified test data that the cable assemblies met all requirements of this specification before fabrication into the other equipment.)

4.1.1 Proposed test methods and proposed forms. - The contractor shall prepare and furnish comprehensive test procedures and test data forms (see 4.1.1.1) to be used in conducting the tests covered in this equipment specification. The test procedures shall describe the test set-ups, including diagrams and identification of proposed test equipment, and a step-by-step sequence of accomplishment. Three copies of the procedures and data forms shall be submitted for approval to the Contracting Officer or to his designated technical representative. The procedures and data forms shall be submitted sufficiently in advance of the contractor's scheduled date for testing to allow the Government 30 days for review and reply. One copy will be returned to the contractor, either with a statement that the proposed methods and forms are approved for use, or with a statement of exceptions if not approved. In the latter case, the contractor shall incorporate the necessary changes and resubmit the material. The approved procedures and forms will subsequently be utilized for inspection testing of all equipment furnished under the Contract.

4.1.1.1 Test data forms. - The contractor shall prepare test data forms for each equipment component subjected to test. Separate forms shall be prepared for each test classification. The title page for each set of test data forms shall show the equipment name, specification number and date, and the contract number and date. The individual test form shall indicate, for each test, the applicable specification paragraph number and the performance limits stated therein. Test data shall, wherever applicable, contain quantitative information (rather than check marks). The original test data form shall be signed by the contractor's test man and countersigned by the Government Representative. Two copies of the completed test data form shall be made; one copy shall be sent to the Contracting Officer and the other delivered to the Government Representative. Copies may be made by use of carbon paper, or by means of a duplicating process. All copies of a given sheet shall carry identical test data. Blank forms shall be typed, lettered by mechanical means, or printed.

4.1.2 Notification of readiness for inspection. - After receipt of approval of test procedures and data forms (4.1.1), the contractor shall notify the Contracting Officer in writing when he is ready for Government inspection of the production models, or, at his risk, of a number of production units. Such notification shall be given in time to reach the Contracting Officer not less than five work days before the desired date of inspection.

4.1.3 Test equipment and test facilities. - The contractor shall provide all the test facilities and test equipment for the specified tests. All instruments shall have calibration labels indicating that they have been calibrated by a reliable laboratory within a period of six months prior to the beginning of the tests. Voltmeters and microammeters shall be of $\pm 1\%$ accuracy. Thermometers shall be of the laboratory type. Ample test facilities and personnel shall be provided by the contractor to test one day's production within 16 hours (two 8 hour shifts).

4.2 Test categories. - Testing of the equipment shall be performed in three categories, production models (4.2.1), production samples (4.2.2) and production units (4.2.3).

4.2.1 Production models. - Unless waived, the contractor, prior to quantity production, shall furnish, without cost to the Government, production models of the equipment specified in the contract schedule in quantities listed below for testing at Government expense.

(a) Cable assemblies. - Two units for each type on the order, complete with molded connectors, caps and/or plugs.
(a1) Cable assemblies without molding. - Two units for each type on the order. Except for molding, these units shall be complete with the required length of cable connected to pins and/or sockets, or both.
(b) Connectors. - Six units of Figure 6a, with plugs.
(c) Connection pins, Figure 6b. - Six each.
(d) ASTM sample test sheets. - Two each will be required for the molding compound used. (If separate insulation and jacket method of molding is used, two test sheets will be required for both type materials.)
(e) Certified test report with test data for the molding material. - This report shall be required in duplicate. The test data shall include all factual values required to show conformance of the molding material to this specification.
(f) Insulation resistance (IR) correction factors for the insulating material used in the molding process. This data, required in duplicate, shall list the IR correction factors of the molding material used in fabrication of the specification equipment. This data will be required in 1°F increments between +40°F and +90°F to convert the IR values obtained at a test temperature other than 60°F to the values specified at 60°F in Table "B", paragraph 4.3.7.1.1.

(Notes: With the cable assemblies and connectors in (a), (a1) and (b) above, the contractor shall furnish the following at no cost to the Government:

(1) With the Figure 6a connectors, the contractor shall furnish two double-end insert plugs and two protective plugs manufactured of nylon or equal material of suitable dielectric strength. These test plugs shall be manufactured to the minimum dimensions of the mating portion of a standard plug depicted in Figure 1a, attached herein.

(2) When cable assemblies are specified having the connector molded to one end only, two 12 inch long mating insert test plugs or receptacles, as the case may be, shall be furnished with the samples made of material specified in Note 1. The plugs shall be manufactured to the minimum dimensions and the receptacles to the maximum mating dimensions shown on the applicable Figures.

(3) Cable assemblies specified in the contract with both ends affixed with molded connectors, two 12 inch long mating insert test plugs

or receptacles will be required for one end and protective caps or plugs for the other end made of nylon or other suitable material and of mating dimensions described in Note 2.)

4.2.1.1 Production model testing. - Testing of the production models shall be in accordance with paragraphs 4.3.1 through 4.3.5, 4.3.6.1 and as applicable in paragraph 4.3.7. The equipment required by Notes (1) - (3), paragraph 4.2.1, will be used by the Government for establishing that the production models meet the requirements of this specification and that the molding compound and IR correction factor data submitted are correct. In case the Contracting Officer waives furnishing the above material to the Government, the required tests shall be performed at the contractor's expense either at his plant in the presence of an authorized Government Representative, or in an independent testing laboratory, designated by the contractor, which is acceptable to the Government. Certified test reports shall be accepted in the event the Contracting Officer waives witnessing the test on the production models. The contractor shall proceed with the quantity production upon written approval of the production models by the Contracting Officer or by his designated technical representative. The contractor may elect, at his option and risk, to proceed with the quantity production prior to approval of the production models.

4.2.2 Production samples. - Testing of these units shall be made after acceptance of the production models. Production samples shall be selected by the inspector from each day's production in the amount of 2%, but not less than three of each type of cable assembly, connectors or connecting pins on the contract.

4.2.2.1 Testing of production samples. - Testing of these production samples shall be in accordance with paragraphs 4.3.1, 4.3.6.1 and as applicable in paragraph 4.3.7.

4.2.3 Production units. - Testing of the production units shall be made after acceptance of the production samples. Testing shall be as specified in paragraphs 4.3.1, 4.3.6.2 and as applicable in paragraph 4.3.7.

4.3 Test procedure.

4.3.1 Visual inspection. - All units shall be carefully inspected against defects in workmanship and materials. All receptacles shall be checked internally for rubber compound deposits. The production models and the production samples shall be visually inspected for physical dimensional conformance to the attached Figures 1a through 6b, whichever applies to the contract equipment. The plug and receptacle connectors shall be checked for proper marking (3.6.5) and for dimensional conformance of the protective caps and plugs specified in paragraph 3.6.6.

4.3.2 Molding compound. - The ASTM sample test sheets of the molding material (4.2.1.d) required with the production models shall be used to establish conformance to the properities specified in paragraphs 3.4.4 and 3.5.1 and to verify the IR correction factor data submitted by the contractor (4.2.1.f).

4.3.3 Bonding of molding material. - The bond between the cables and molding material shall be checked for conformance with paragraph 3.4.3.

4.3.4 Pins and socket assembly. - This test shall include examination of the basic material, checking its conductivity (3.5.2). This will also apply to the connecting pins (3.5.3). Bonding wires to pins and sockets shall be checked for conformance to paragraph 3.6.3.5. Finally, the requirements stated in paragraph 3.6.4 shall be checked.

4.3.4.1 Voltage drop test across pin-sockets. - The pins shall be plugged into their corresponding sockets. The necessary instruments and test environment shall be provided to determine conformance with voltage drop limitations of Table "A" in paragraph 3.6.4.3. Test results should not exceed allowable limits at an ambient temperature range of 20°C (68°F) to 30°C (86°F). The specified rated current shall be allowed to flow through the connector joint for a minimum of 24 hours before taking voltage drop readings. The mated joints shall not be disturbed during the 24 hour warm-up period.

4.3.5 Protective caps and plugs. - These items shall be checked for conformance to the requirements specified in paragraph 3.6.6.

4.3.6 Continuity and polarity. - Continuity and polarity checking will be required on all cable assemblies as described below. (The rated current referred to in the subsequent paragraphs is displayed on each Figure sheet.)

4.3.6.1 Production models and production samples. - Rated current shall be circulated through each conductor-pin or conductor-socket component in each cable assembly for at least 1 minute after the ammeter reading has stabilized. (The conductors of a multi-conductor assembly may be connected in series.) During this time, grasping the connector body and the cable six inches away, the cable shall be flexed, forming 90 degree bends, first five times in one plane then five times in another plane displaced 90 degrees. Any variation in the current during the flexing shall be cause for rejection of the faulty units, then further sampling shall be made and checking for possible defects in workmanship and/or design. Polarity may be checked with an ohmmeter, test lamp, or the like, which will provide positive identification of the proper conductor-pin or socket relationship for the various cable assemblies specified herein.

4.3.6.2 Production units. - Polarity checks will be performed as described in paragraph 4.3.6.1 for the production models and production samples. Continuity checking may be performed on these cable assemblies individually or on multiple units connected in series. Individual conductor-pin or socket components of a multi-conductor cable assembly shall be connected in series, which may, in turn be connected in series with other such cable assemblies of the same current rating. Rated current shall be circulated through such series circuit allowing first the ammeter reading to stabilize. Next each cable shall be flexed at the connector to full 90 degrees by holding the connector body and the cable six inches away. Flexing shall be once in one plane and once in another plane displaced 90 degrees. The flexing shall be repeated at each cable-connector junction one-by-one or simultaneously on a number of junctions, personnel permitting. Any variation in the current

during the flexing shall be cause for rejection. In case a faulty cable assembly is found in the chain of units under test, this shall be removed from the chain, the freed ends in the chain plugged or connected together, the current readjusted and the flexing continued on the balance of units. The grounding conductor marked "green" on some types of cable assemblies shall be included in this continuity check.

4.3.7 Dielectric and insulation resistance test.

4.3.7.1 General provisions. - Each connector and cable assembly shall be subjected to this test. The contractor may elect to test the units individually or connected in series to form a continuous string. In any case, the leakage current shall not exceed the values specified in Table "B" in paragraph 4.3.7.1.1. All units, or assembled strings shall be checked for continuity and placed in a grounded tap water bath for at least a 24 hour (4.3.7.2) or 18 hour (4.3.7.3) immersion period as specified below. Temperature of the water bath may vary within the range of 40°F and 90°F during the soaking period. However, during the last two hours before the test, the temperature shall be controlled to remain within ±2°F and proven by a recorded chart. Laboratory type thermometers shall be used to check the water bath temperature during testing. Items requiring test leads, when tested in the water bath, shall be submerged in such manner that not more than 1 foot of the test lead shall be immersed. When cable assemblies are tested plugged together, as much of the cable shall be submerged as possible leaving out of the bath only the length necessary for connection of the test instruments. In order to prevent water creapage into the exposed conductors, it may be necessary to provide a guard at the connection point of the high voltage instrument lead to the cable assembly and also humidity control may be necessary in the test room to eliminate effect of the surface leakage. Insulating tape shall not be allowed on the mated connector joints during the immersion and testing. Suitable instruments, having the proper ranges and scales for easy readings, shall be provided by the contractor to measure the voltages and leakage currents. The specified DC test voltage must be impressed directly on the specimen under test, such as, between conductors or from conductor or conductors to ground. The voltmeter shall be connected to read this voltage. The test voltage shall be applied for at least 1 minute before observing the leakage current values. Continuity of the specimens under test shall be rechecked after voltage is removed. The maximum and zero indication of the voltmeter shall be checked periodically by suspending the high voltage lead in the air and by immersing the lead in the water bath. Units that fail this test, or any evidence of softening, or swelling of the molding material or any faults will be cause for rejection.

4.3.7.1.1 Insulation resistance (IR) limits. - The minimum acceptable values of the insulation resistance for the various cable assemblies and connectors at 60°F shall be as listed in Table "B" below. The insulation resistance values obtained at the temperature other than 60°F shall be recalculated to 60°F values by using the proper correction factors referred to in paragraph 4.2.1.f.

TABLE "B"

Number of Pins or Sockets	VOLTAGE RATING OF UNITS	DC TEST VOLTAGE ACROSS THE UNIT UNDER TEST		Minimum Insulation Resistance in Megohms and MLC* at 60°F			
		Between Conductors	Conductor to Ground	Between Conductors		Conductor to Ground	
					MLC*		MLC*
1 & 2	600	4,700	4,700	3,000	1.57	3,000	1.57
3 & 4	600	4,700	4,700	1,500	3.14	1,500	3.14
5 & More	600	4,700	4,700	750	6.28	750	6.28
1	5,000	-	15,000	-	-	3,000	5.00

*MLC = maximum leakage current in microamperes at 60°F

4.3.7.2 Dielectric test on the production models. - The production models shall be mated with the test plugs or receptacles required with each type (see Notes (1) - (3) paragraph 4.2.1) and, after a continuity check, shall be subjected to a 24 hour immersion period. Within 30 minutes after the immersion, the proper test voltage shall be applied and the leakage current observed; this test shall be repeated at the end of the soaking period and the continuity rechecked. The applied voltages, the observed leakage currents and the insulation resistances shall be displayed in a table for each production model unit. These records shall be forwarded to the Contracting Officer in duplicate by the Government Representative or by the contractor for permanent records.

4.3.7.3 Dielectric test on production samples and production units. - All production samples and at least 50% of the production units shall be checked with "go" and "no go" gauges, then all connectors and cable assemblies shall be subjected to at least an 18 hour immersion period. The connectors and cable assemblies shall be plugged together with standard test plug or receptacle connectors made available by the contractor for this test. All these standard test plugs and test receptacles shall be checked for dimensions (plugs with minimum and receptacles with maximum tolerances of the applicable Figures in this specification). The dielectric and insulation resistance test on these units in this paragraph 4.3.7.3 may be made only at the end of the soaking period. However, a continuity check shall be required prior and after voltage application. In the event both the mating plugs and receptacles are on the same order, they shall be used in lieu of the special test plug or test receptacle connectors described above.

5. PACKAGING, PACKING, AND MARKING FOR SHIPMENT.

5.1 Packaging. - No packaging beyond that normally provided under best commercial practice shall be required. All units shall be packaged in cardboard or plastic containers with no more than 25 units to a package. Each package shall be appropriately marked as to number, content, specification, figure number and contract number. All units in any package shall be of one type only.

5.2 Packing. - Unless otherwise specified by the Contracting Officer, containers, insofar as possible, shall contain the same number of like items, shall be uniform in size and snugly packed (but not compressed, because of danger of connector distortion). The Government reserves the right to specify the number of exterior containers for like items, in case the requirements at the various destinations call for quantities smaller than ordinarily packaged in one container. Containers shall be designed to insure acceptance by common or other carrier for safe transportation, at the lowest rate, to the point of delivery.

5.3 Marking for shipment. - Interior and exterior shipping containers shall be legibly and durably marked with the following information:

Identification (Double End Receptacles, Connection Pins, etc.)

Specification FAA-E-1041e & Figure No.

Quantity_____

FAA Contract/Order Number_____

Contractor's/Manufacturer's Part Number_____

Contractor's/Manufacturer's Name or Trademark_____

Contractor's/Manufacturer's Address_____

6. NOTES.

6.1. - None.

* * * * *

The following figures will form part of this specification:

Number	Description	Page Number
Figure 1a	Single Conductor, 5 kV Cable Assembly (plug)	17
Figure 1b	Single Conductor, 5 kV Cable Assembly (receptacle)	17

Figure 2a	Two Conductor, 600 V Cable Assembly (plug)	18
Figure 2b	Two Conductor, 600 V Cable Assembly (receptacle)	18
Figure 2c	Two Conductor, 600 V Cable Assembly (plug-receptacle)	18
Figure 3a	Three Conductor, 600 V Cable Assembly (plug)	19
Figure 3b	Three Conductor, 600 V Cable Assembly (receptacle)	19
Figure 5a	Five Conductor, 600 V Cable Assembly (plug)	20
Figure 5b	Five Conductor, 600 V Cable Assembly (receptacle)	21
Figure 5c	Five Conductor, 600 V Cable Assembly (receptacle)	22
Figure 5d	Five Conductor, 600 V Cable Assembly (plug)	23
Figure 5e	Five Conductor, 600 V Cable Assembly (receptacle)	24
Figure 6a	Single Conductor, 5 kV Double End Receptacle	25
Figure 6b	Connection Pin, 1/4" Copper	25

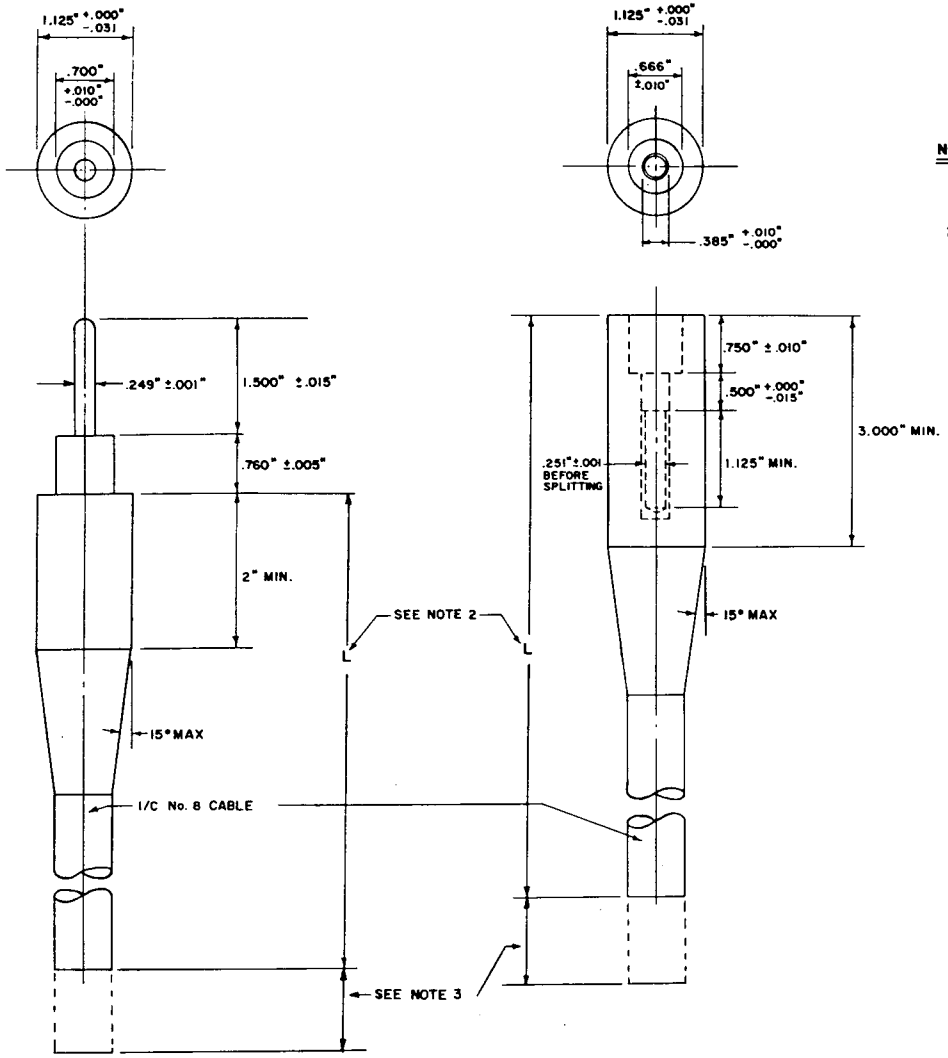

FIGURE 1a (CABLE ASSEMBLY - PLUG)

FIGURE 1b (CABLE ASSEMBLY - RECEPTACLE)

NOTES

1. ALL CONNECTORS SHALL HAVE SEALING CAPS/PLUGS FOR PROTECTION OF MATING SURFACES, PINS/SOCKETS.
2. THE LENGTH OF THE CABLE ASSEMBLIES SHALL BE AS FOLLOWS:

   L = 10" ±1"

   L = 18" ±1"
3. ADDITIONAL LENGTH AS REQUIRED FOR MOLDING TO S/S TRANSFORMERS, OR AS REQUIRED.
4. CABLE LEADS SHALL BE 19 STRAND (MIN.) FLEXIBLE.

SPECIFICATION FAA-E-1041e FIGURES 1a & 1b

PLUG AND RECEPTACLES (SINGLE CONDUCTOR, 5,000 VOLTS TO GROUND RATING: 25 AMPS.)

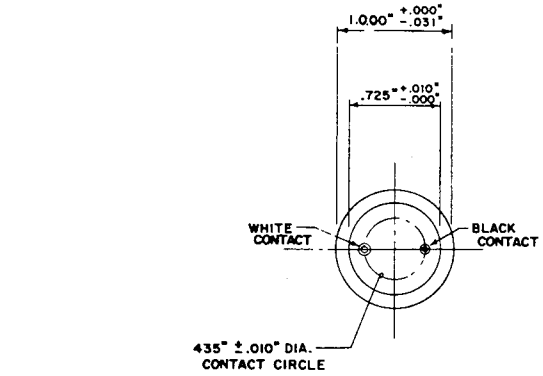

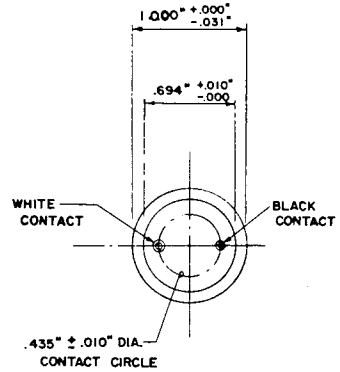

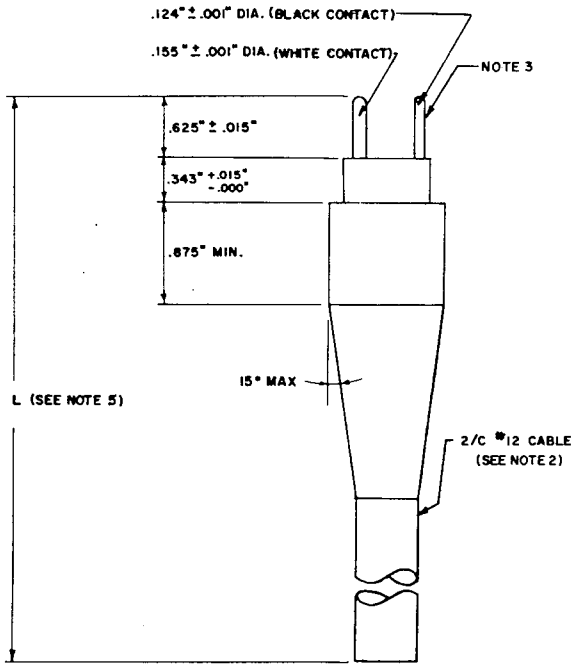

FIGURE 2a (CABLE ASSEMBLY - PLUG)

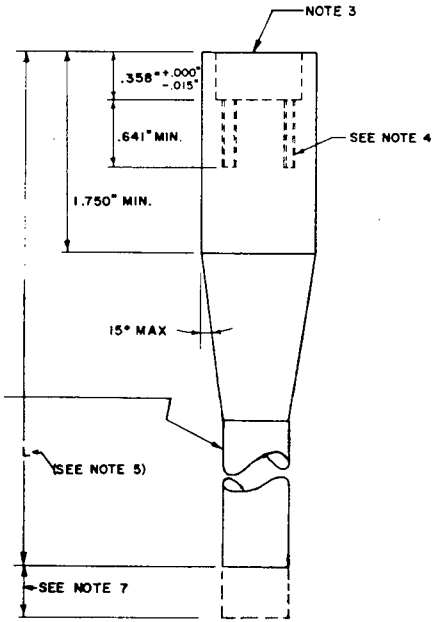

FIGURE 2b (CABLE ASSEMBLY - RECEPTACLE)

NOTES

1. UNLESS OTHERWISE SPECIFIED, TOLERANCES FOR DECIMALS SHALL BE ±.005" AND FOR ANGLES ± ½°
2. ALL CABLE LEADS SHALL BE 19 STRAND (MIN.) FLEXIBLE, ROUND-LAY, UNLESS FLAT-LAY IS SPECIFIED.
3. SEALING CAPS/PLUGS SHALL BE FURNISHED FOR PROTECTION OF MATING SURFACES, PINS/SOCKETS.
4. METAL SOCKETS SHALL BE RECESSED NOT MORE THAN ⅛" BELOW INSIDE FACE OF RECEPTACLE. BEFORE SPLITTING THE LARGE SOCKET SHALL HAVE AN I.D. OF .157" ±.001" AND THE SMALL SOCKET SHALL HAVE AN I.D. OF .126" ± .001.
5. THE LENGTH OF THE CABLE ASSEMBLIES SHALL BE AS FOLLOWS:
   - L = 18" ± 1"
   - L = 24" ± 1" FLAT LAY
   - L = 36" +3" -1"
   - L = 4'-6" +3" -1"
   - L = 6'-0" +3" -1"
   - L = 7'-6" ± 3" FLAT OR ROUND-LAY
   - L = 7'-6" ± 3" 2/C #16, 600V, ROUND-LAY
   - L = 8'-0" +3" -1"
   - L = 11'-0" ± 3"
   - L = 16'-0" ± 6"
6. ALL CABLES SHALL BE COLOR CODED WITH CODING COLORS BEING CARRIED THROUGH MALE AND FEMALE CONNECTORS IN PROPER SEQUENCE.
7. ADDITIONAL LENGTH AS REQUIRED FOR MOLDING TO S/S TRANSFORMER.
8. DIMENSIONS OF PLUG & RECEPTACLE CONNECTORS IN FIGURE 2c ARE SAME AS IN FIGURES 2a & 2b RESPECTIVELY.

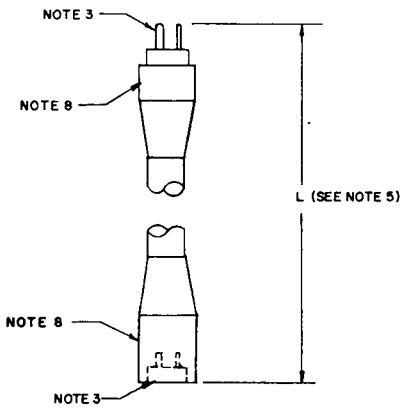

FIGURE 2c (CABLE ASSEMBLY-PLUG/RECEPTACLE)

SPECIFICATION FAA-E-1041e FIGURES 2a, 2b & 2c

PLUG & RECEPTACLE (2/C, 600 V. BETWEEN CONTACTS AND TO GROUND, RATING: 20 AMPS.)

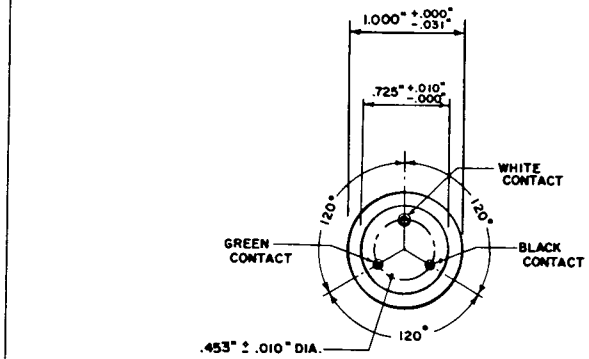

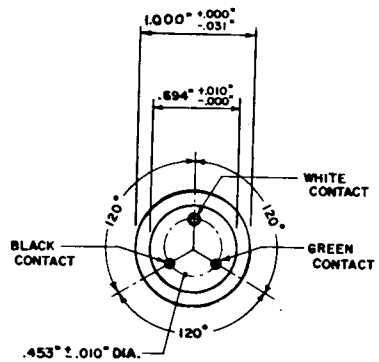

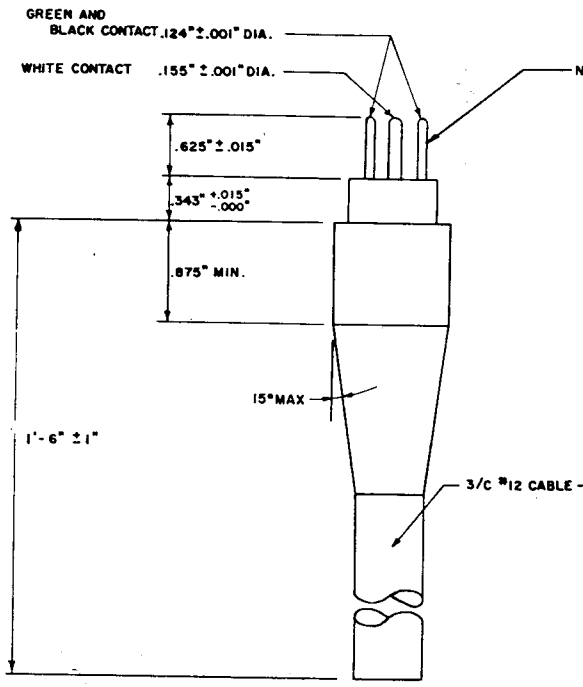

FIGURE 3a (CABLE ASSEMBLY - PLUG)

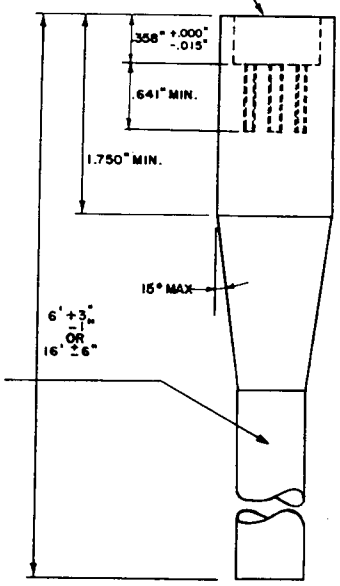

FIGURE 3b (CABLE ASSEMBLY - RECEPTACLE)

NOTES

1. UNLESS OTHERWISE SPECIFIED, TOLERANCES FOR DECIMALS SHALL BE ± .005" AND FOR ANGLES ± ½"
2. ALL CABLE LEADS SHALL BE 19 STRAND (MIN.) FLEXIBLE, ROUND-LAY
3. ALL CONNECTORS SHALL HAVE SEALING CAPS/PLUGS FOR PROTECTION OF MATING SURFACES AND PINS OR SOCKETS.
4. ALL CABLES SHALL BE COLOR CODED WITH CODING COLORS BEING CARRIED THROUGH MALE AND FEMALE CONNECTORS IN PROPER SEQUENCE.
5. METAL SOCKETS SHALL BE RECESSED NOT MORE THAN ⅛" BELOW INSIDE FACE OF RECEPTACLE. BEFORE SPLITTING THE LARGE SOCKET SHALL HAVE AN I. D. OF .157" ± .001" AND THE SMALL SOCKET SHALL HAVE AN I. D. OF .126" ± .001"

SPECIFICATION FAA-E-1041e FIGURES 3a & 3b

PLUG & RECEPTACLE (3/C, 600 V. BETWEEN CONTACTS AND TO GROUND, RATING: 20 AMPS)

NOTES

1. UNLESS OTHERWISE SPECIFIED, TOLERANCES FOR DECIMALS SHALL BE ±.005" AND FOR ANGLES ±½°
2. DIAMETER OF SMALL PINS .092" ± .001" LARGE PINS .155" ± .001".
3. THE CABLE SHALL BE COLOR CODED WITH COLORS BEING CARRIED THROUGH MALE CONNECTOR IN PROPER SEQUENCE.
4. THE CONNECTOR SHALL HAVE A CAP FOR PROTECTION OF MATING SURFACES AND PINS.
5. ALL CABLE LEADS SHALL BE 19 STRAND (MIN.) FLEXIBLE.
6. INSULATION RESISTANCE SHALL BE 750 MEGOHMS (MIN.).
7. 4-SMALL CONTACTS ON .734" DIA. CIRCLE.
8. 1-LARGE CONTACT ON .656" DIA. CIRCLE.

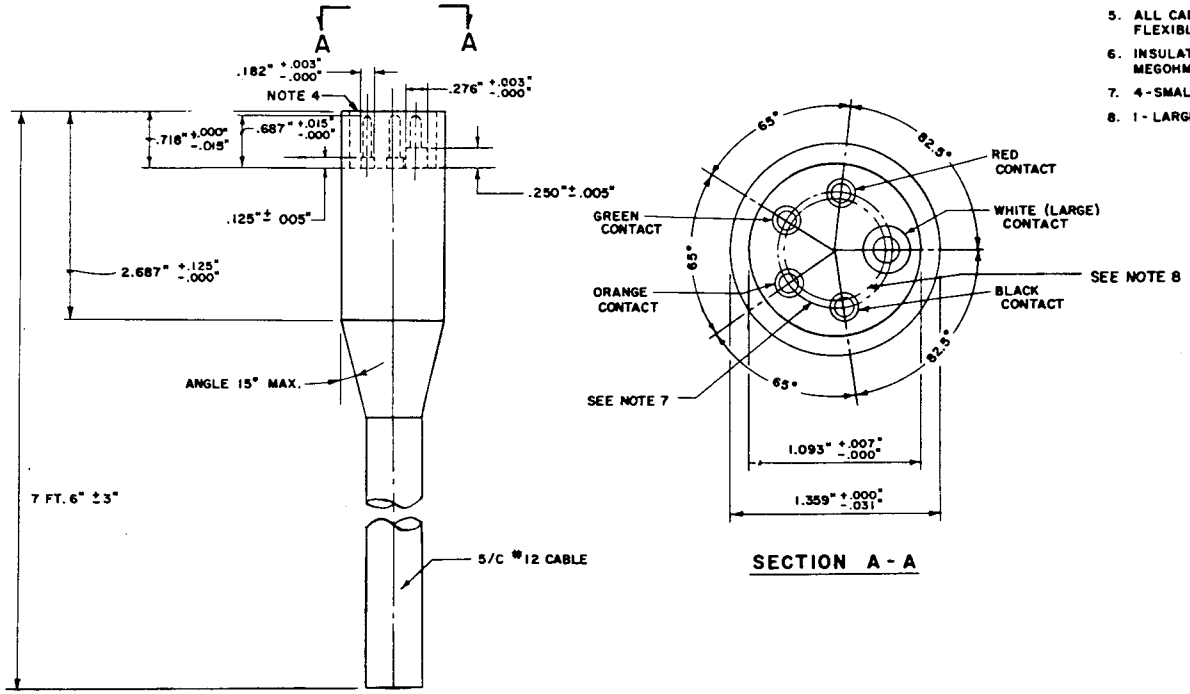

CABLE ASSEMBLY—PLUG

SECTION A-A

SPECIFICATION FAA-E-1041e FIGURE 5a

PLUG (5/C, 600 V. BETWEEN CONTACTS AND TO GROUND, UNLESS OTHERWISE SPECIFIED, RATING: 10 AMPS)

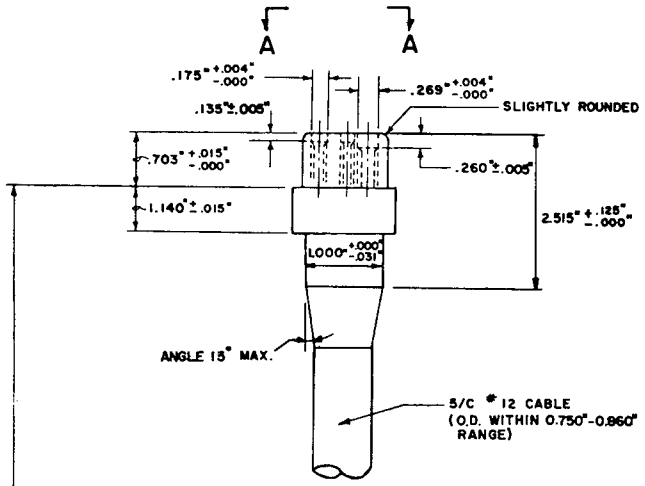

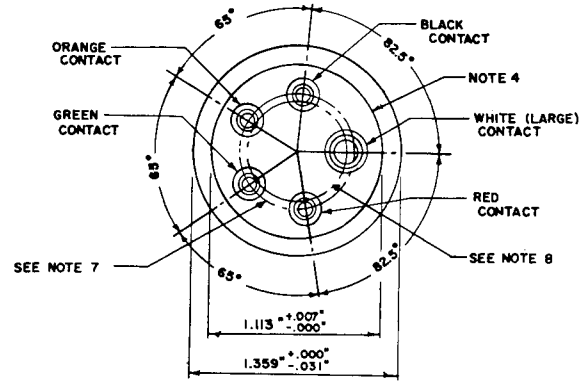

SECTION A-A

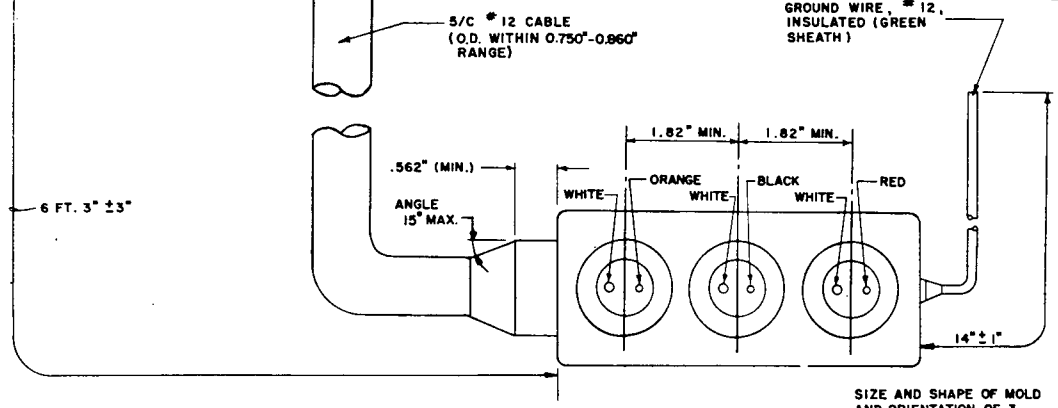

NOTES

1. UNLESS OTHERWISE SPECIFIED, TOLERANCES FOR DECIMALS SHALL BE ±.005" AND FOR ANGLES ± ½°.
2. BEFORE SPLITTING THE LARGE SOCKET SHALL HAVE AN I.D. OF .157" ± .001" AND THE SMALL SOCKETS SHALL HAVE AN I.D. OF .094" ± .001".
3. THE CABLE SHALL BE COLOR CODED WITH COLORS BEING CARRIED THROUGH MALE AND FEMALE CONNECTORS IN PROPER SEQUENCE.
4. ALL CONNECTORS SHALL HAVE SEALING CAPS/PLUGS FOR PROTECTION OF MATING SURFACES AND PINS OR SOCKETS.
5. ALL CABLE LEADS SHALL BE 19 STRAND (MIN.) FLEXIBLE.
6. INSULATION RESISTANCE SHALL BE 750 MEGOHMS (MIN.).
7. 4 - SMALL CONTACTS ON .734" DIA. CIRCLE.
8. 1 - LARGE CONTACT ON .656" DIA. CIRCLE.

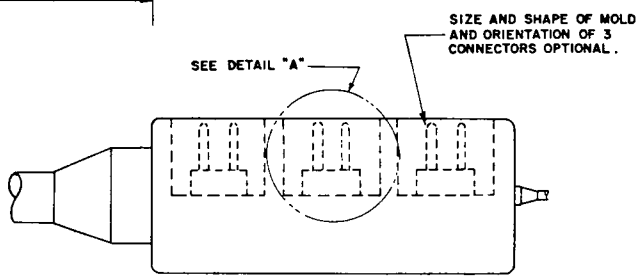

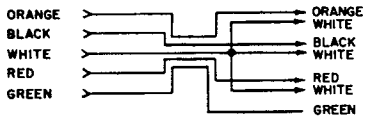

CABLE ASSEMBLY WIRING DIAGRAM

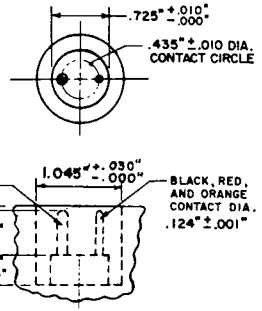

DETAIL "A"

SPECIFICATION FAA-E-1041e FIGURE 5b

RECEPTACLE (5/C, 600 V. BETWEEN CONTACTS AND TO GROUND. RATING-10 AMPS)

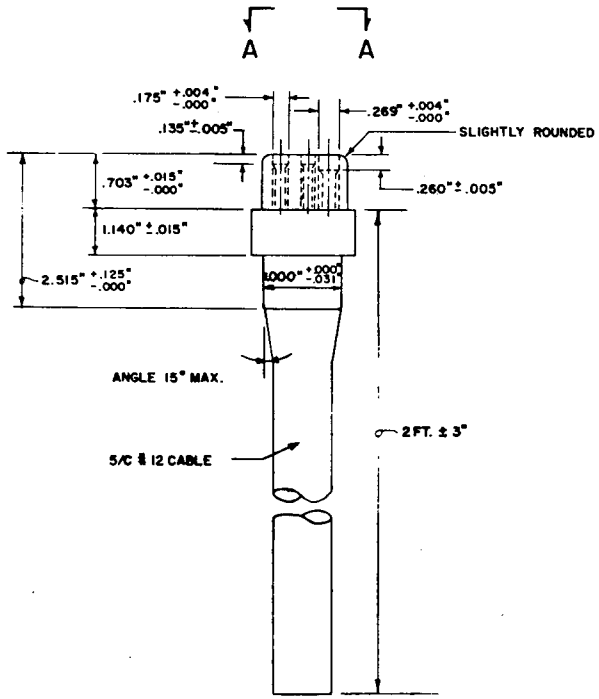

CABLE ASSEMBLY – RECEPTACLE

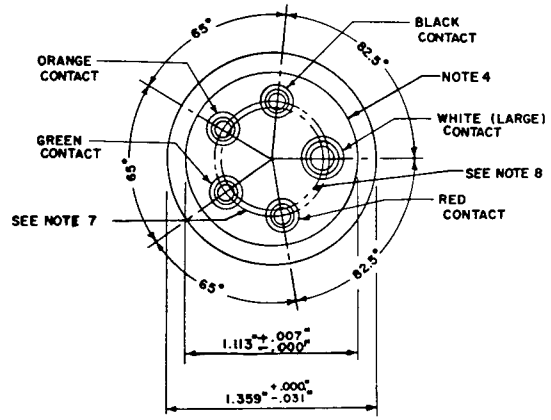

SECTION A-A

SPECIFICATION FAA-E-1041e FIGURE 5c

RECEPTACLE (5/C, 600 V. BETWEEN CONTACTS AND TO GROUND, UNLESS OTHERWISE SPECIFIED. RATING-10 AMPS)

NOTES

1. UNLESS OTHERWISE SPECIFIED, TOLERANCES FOR DECIMALS SHALL BE ± .005" AND FOR ANGLES ± ½".
2. BEFORE SPLITTING THE LARGE SOCKET SHALL HAVE AN I.D. OF .157" ± .001" AND THE SMALL SOCKETS SHALL HAVE AN I.D. OF .094" ± .001".
3. THE CABLE SHALL BE COLOR CODED WITH COLORS BEING CARRIED THROUGH MALE AND FEMALE CONNECTORS IN PROPER SEQUENCE.
4. ALL CONNECTORS SHALL HAVE SEALING CAPS FOR PROTECTION OF MATING SURFACES AND SOCKETS.
5. ALL CABLE LEADS SHALL BE 19 STRAND (MIN.) FLEXIBLE.
6. INSULATION RESISTANCE SHALL BE 750 MEGOHMS (MIN.).
7. 4 - SMALL CONTACTS ON .734" DIA. CIRCLE.
8. 1 - LARGE CONTACTS ON .656" DIA. CIRCLE.

NOTES

1. UNLESS OTHERWISE SPECIFIED, TOLERANCES FOR DECIMALS SHALL BE ±.005" AND FOR ANGLES ± ½°.
2. DIAMETER OF SMALL PINS .092" ±.001", LARGE PINS .155" ± .001".
3. THE CABLE SHALL BE COLOR CODED WITH COLORS BEING CARRIED THROUGH MALE CONNECTOR IN PROPER SEQUENCE.
4. THE CONNECTOR SHALL HAVE A CAP FOR PROTECTION OF MATING SURFACES AND PINS.
5. 3 - SMALL CONTACTS ON .734" DIA. CIRCLE.
6. 2 - LARGE CONTACTS ON .656" DIA. CIRCLE.
7. #12 WIRE CONNECTED TO THIS PIN SHALL BE INSULATED FOR 3000 VOLTS.
8. ALL CABLE LEADS SHALL BE 19 STRAND (MIN.) FLEXIBLE.

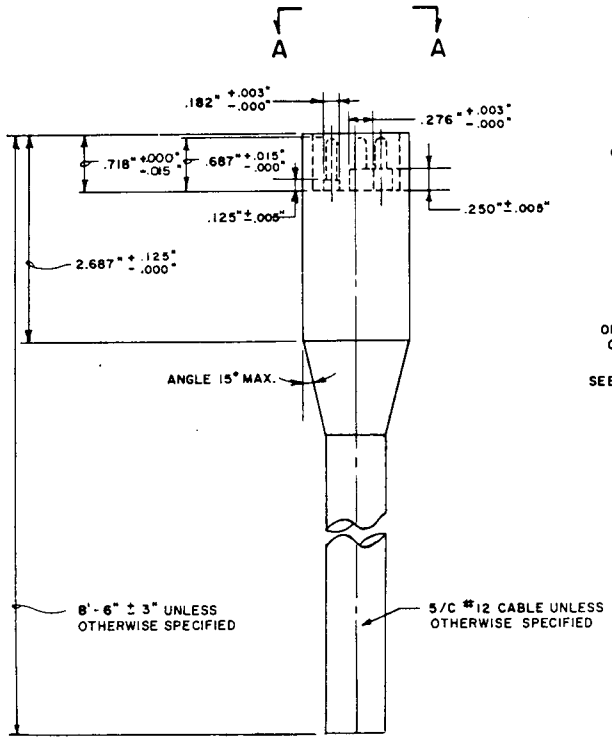

CABLE ASSEMBLY – PLUG

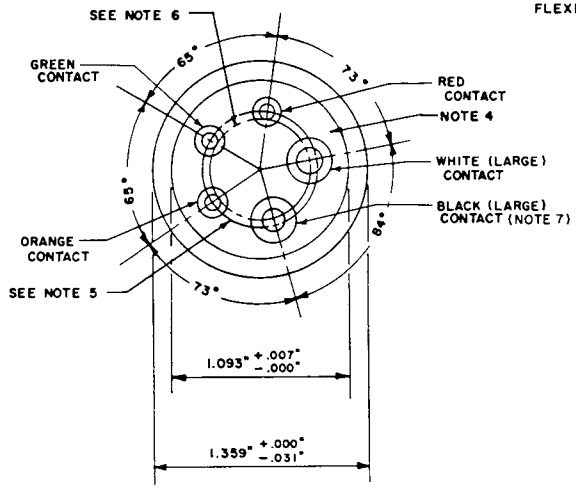

SECTION A - A

SPECIFICATION FAA-E-1041e FIGURE 5d

PLUG (5/C, 600 V. BETWEEN CONTACTS AND TO GROUND, UNLESS OTHERWISE SPECIFIED. RATING: 10 AMPS)

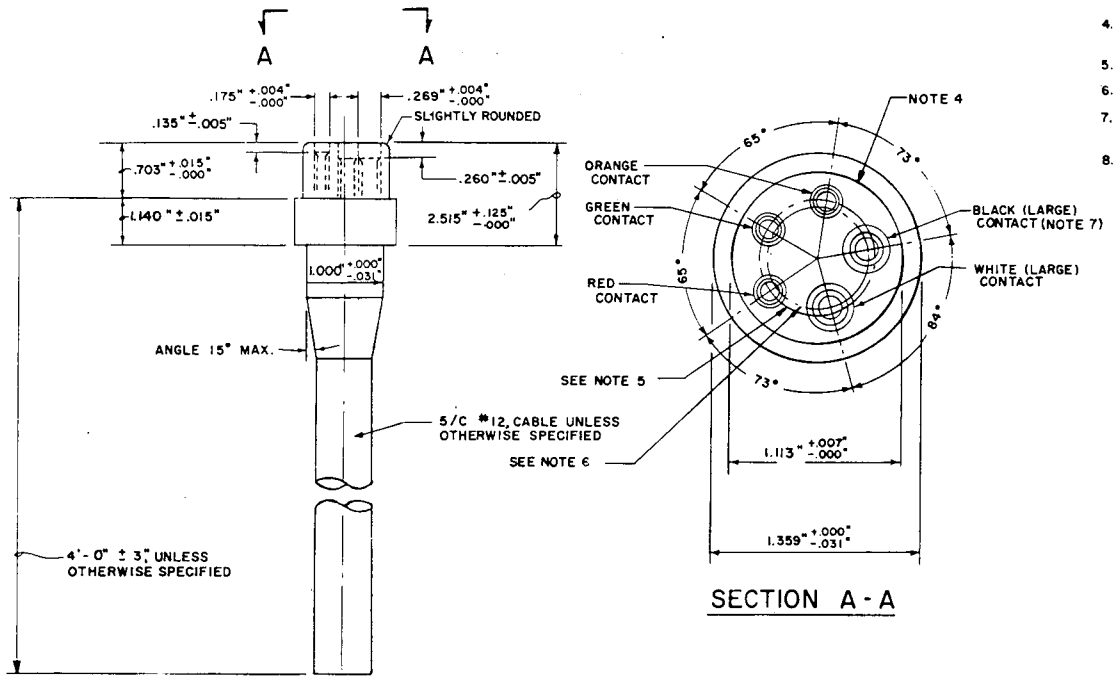

SECTION A-A

CABLE ASSEMBLY - RECEPTACLE

NOTES

1. UNLESS OTHERWISE SPECIFIED, TOLERANCES FOR DECIMALS SHALL BE ±.005" AND FOR ANGLES ± ½°.
2. BEFORE SPLITTING, THE LARGE SOCKETS SHALL HAVE AN I.D. OF .157" ±.001" AND THE SMALL SOCKETS SHALL HAVE AN I.D. OF .094" ±.001".
3. THE CABLE SHALL BE COLOR CODED WITH COLORS BEING CARRIED THROUGH FEMALE CONNECTOR IN PROPER SEQUENCE.
4. ALL CONNECTORS SHALL HAVE SEALING CAPS FOR PROTECTION OF MATING SURFACES AND SOCKETS.
5. 3 - SMALL CONTACTS ON .734" DIA. CIRCLE.
6. 2 - LARGE CONTACTS ON .656" DIA. CIRCLE.
7. #12 WIRE CONNECTED TO THIS PIN SHALL BE INSULATED FOR 3000 VOLTS.
8. ALL CABLE LEADS SHALL BE 19 STRAND (MIN.) FLEXIBLE.

SPECIFICATION FAA-E-1041e FIGURE 5e

RECEPTACLE (5/C, 600 V. BETWEEN CONTACTS AND TO GROUND, UNLESS OTHERWISE SPECIFIED. RATING-10 AMPS.)