FAA-E-2514
December 20, 1971

DEPARTMENT OF TRANSPORTATION
FEDERAL AVIATION ADMINISTRATION SPECIFICATION

FACILITY BATTERY CHARGER

1. SCOPE

1.1 Scope.- This specification provides the minimum requirements for a battery charger (hereafter referred to as "charger") capable of supplying filtered direct current at a nominal voltage and ampere capacity as specified in the invitation for bid (IFB) or contract, and as further detailed herein. The charger output will be used to supply power for a continuous radio communication system load with, or without an associated battery backup.

2. APPLICABLE DOCUMENTS

2.1 General.- The following documents, of the issue specified in the IFB or contract form a part of this specification to the extent specified herein.

2.2 Federal Aviation Administration documents

FAA-STD-013 Quality Control Program Requirements

(Copies of this specification and of the applicable FAA document may be obtained from the Contracting Officer in the Federal Aviation Administration office issuing the IFB. Request should fully identify material desired, i.e., document number and date together with amendment numbers and dates, where applicable. Requests shall cite the IFB or the contract involved or other use to be made of the requested material.)

2.3 Military documents

MIL-STD-461A Electromagnetic Interference Characteristics Requirements for Equipment

MIL-E-17555 Electronic and Electrical Equipment and Associated Repair Parts, Preparation for Delivery Of.

(Single copies of military specifications may be requested by mail or telephone from the U. S. Navy Supply Depot, 5801 Tabor Avenue, Philadelphia, Pa. 19120. For telephone requests call 215 697-3321, 8:00 a.m. to 4:30 p.m., Monday through Friday. Not more than five items may be ordered on a single request; the invitation for bids or the contract number shall be cited where applicable.)

3. REQUIREMENTS

3.1 Instruction Books.- Two instruction books shall be furnished with each unit and shall include the following data as a minimum:

(a) General description
(b) Theory of operation
(c) Schematic Diagram
(d) Operation characteristics
(e) Maintenance Data
(f) Trouble shooting charts
(g) Illustrated parts breakdown
(h) Replaceable parts list
(i) Photographs of equipment
(j) Guarantee provisions

3.2 Charger type.- Each charger furnished by the contractor shall bear UL approval and shall have, as a minimum, the characteristics listed in the following subparagraph.

3.2.1 General characteristics

3.2.1.1 Basic charger functions.- The operating input shall be 120 volts, 60 Hz, single phase. The output shall be a filtered DC supply having the following capabilities:

(a) Continuously supplying a minimum of 125 percent of an equipment load specified in the IFB, with, or without inclusion of a battery system in the charger output.

(b) Maintaining a float charge on a lead acid battery bank while supplying the load in (a) above.

(c) Automatically restoring battery charge from 60 percent discharge condition to a 90 percent charge within 12 hours.

(d) Simultaneously performing (a) and (c) above.

(e) When operating under service conditions of 3.2.1.4, perform in accordance with requirements of (a), (b), (c) and (d) above.

(f) Provisions for remote monitoring of battery charging current. See 3.2.2.3(e).

3.2.1.2 Paralleling.- Each charger unit shall be capable of parallel operation with an identical unit.

3.2.1.3 Device characteristics.- Electronic/electrical circuitry shall employ solid-state devices where the state of the art is commercially adaptable.

3.2.1.4 Service conditions.- Unless otherwise specified herein, all requirements shall be met when the charger is operated under the service conditions as specified below. The charger shall suffer neither damage nor performance degradation under these conditions:

(a)	Temperature	minus 15°C to plus 50°C
(b)	Relative humidity	5% to 90%
(c)	AC line voltage	120 volt AC ± 10%
(d)	AC line frequency	60 Hz ± 3%

3.2.2 Electrical performance requirements.- Each charger furnished by the contractor shall have the following characteristics, as a minimum:

(a) At a nominal 120 V AC input, the charger output voltage shall be maintained within plus or minus one percent of the preset float or equalize charge rate upon abrupt change from no load to full load and vice versa.

(b) Under conditions of 3.2.1.1 and of (a) above, output voltage ripple shall not exceed 30 mV RMS.

(c) Internal connections shall be available to furnish battery current for remote indication of loss of battery DC charging function.

(d) Remote alarm for indication of loss of battery charging current. See 3.2.2.3(e).

3.2.2.1 Float and equalize controls.- The charger shall have float and equalize voltage controls with the following minimum adjustable range:

Float - 2.15 to 2.2 volts per cell

Equalize - 2.22 to 2.4 volts per cell

The maximum output voltage shall not exceed the conditions of paragraph 3.2.2(a) while the charger is in the equalize mode.

3.2.2.2 Electromagnetic interference.- The charger shall meet the electromagnetic interference requirements of MIL-STD-461a, Table A-II, Class SS-2, Tests REO2 and A-CE1, 0.15 to 30 MHz.

3.2.2.3 Protective provisions.- The following system elements shall be protected as follows:

(a) The charger shall be powered by an integral transformer with separate primary and secondary windings.

(b) The charger shall have inherent short circuit protection in addition to the use of fuses, circuit breakers or relays. A continuous short circuit on the output shall not damage charger components and the output voltage shall return to normal immediately when the short circuit is removed. The input power transformer shall be properly fused (or breakered) to protect the charger against input line over-current and over voltages. In the event AC power is lost or charger output voltage is lower than the battery voltage, the battery shall not feed power back into the charger unit.

(c) Upon attaining maximum output capability the charger shall shift from voltage regulating to current limiting characteristics and shall limit current output from 110 to 140% of its maximum rated output. Maximum rated output shall be determined by requirements of 3.2.1.1. The charger output shall be fused (or breakered) and coordinated with the charger's current limiting feature. In the event the current limit circuitry does not properly limit the charger output current, the load shall still be protected by fuses or breakers. In the event major internal charger failure occurs, a suitable technique shall also protect the load from excess voltage or current stress.

(d) Upon restoration of an interrupted AC input, the charger shall automatically resume a normal operational status.

(e) An enclosed remote alarm shall be furnished as an adjunct to the charger for installation by others. Maximum size enclosure for the alarm shall be a three gang outlet box or of equal size, all elements under one cover, suitable for flush mounting and conduit installation.

Minimum operational requirements for the alarm are outlined in the following sketch and parts list. The provisions of 3.2.1.3 shall apply to the alarm components.

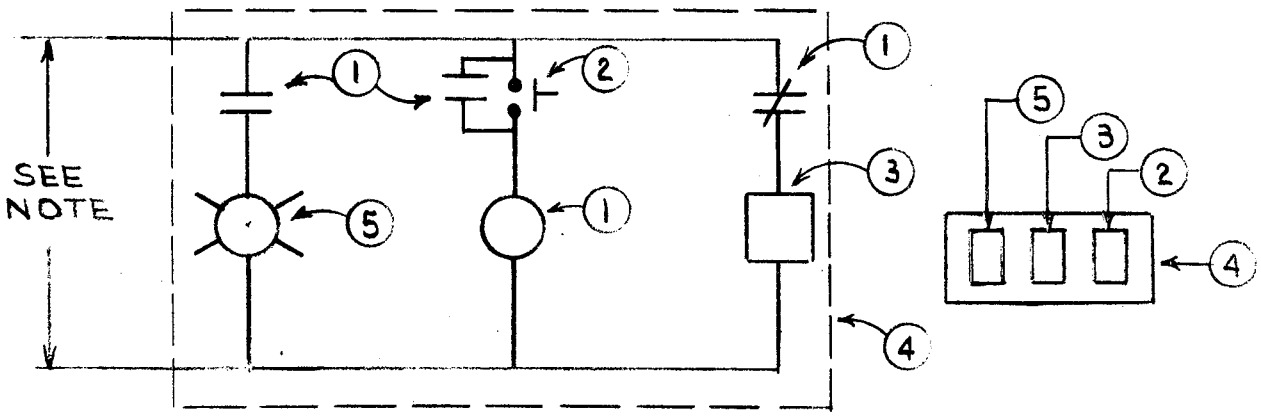

1. Relay with two NO and one NC contacts
2. Momentary pushbutton (silence switch)
3. Edwards Melocall or equal
4. Coverplate
5. Jewel light, 6 watt

Note: Alarm equipment shall be responsive to plus or minus 2 volts of the battery load voltage. The alarm shall be energized by battery current only upon loss of battery charging current.

3.3 Physical parameters.- The charger shall be enclosed in a minimum NEMA type 1 cabinet with convection air cooling. The enclosure shall be furnished with wall mounting flanges, adaptable to free standing floor installation. Terminal boards shall be provided for all external connections. A hinged door with latching provisions shall be an integral part of the enclosure. Knockouts for 3/4 inch, 1 inch, and 1¼ inch rigid conduit shall be provided in each of the enclosure top, sides and bottom. Size of the enclosure shall include gutters of sufficient space to permit installation of the required size of AC, DC and monitoring wiring.

3.3.1 Finish.- The charger enclosure exterior shall be finished in semi-gloss baked enamel. The interior shall have a rust resistant finish.

3.3.2 Nameplate.- Each charger shall have a nameplate permanently attached to the enclosure door. Attachment shall be by means of a minimum of four screws or rivets. Nameplate material shall be non-ferrous metal or rigid plastic with the following data, engraved, indented or embossed thereon:

(a) Manufacturer

(b) Contract Number

(c) Serial Number

(d) CHARGER, BATTERY, LEAD ACID ONLY, INPUT 120 V, _____ AMP, AC, 60 Hz. OUTPUT _____ V, _____ AMP DC

(e) Specification FAA-E-2514

The appropriate input and output values shall be included for the specific charger involved.

3.3.3 Maintainability.- The charger internal components shall be readily accessible by removal of the panel or by being mounted on a hinged panel. The following control indicating units shall be the minimum provided and may be mounted either on the panel or on the enclosure door:

(a) Charger output voltmeter and ammeter

(b) Float voltage adjustment

(c) Equalizing voltage adjustment

(d) Equalizing charger timer (0-24 hour)

(e) AC input switch and DC output switch. These switches may be excluded if breakers are used in lieu of fuses.

Each of these items shall have permanently attached nameplates indicating function.

4. QUALITY ASSURANCE PROVISIONS

4.1 Quality control program.- The requirements of FAA-STD-013 shall apply.

4.2 Factory tests.- The contractor shall furnish all necessary test equipment. The tests in the following subparagraphs shall be made by the contractor and witnessed by a Government representative unless (a) witnessing is waived wholly or in part by the Contracting Officer, or (b) the contractor has certified test data results available which are acceptable to the Contracting Officer, and which applies to the main and required characteristics of the charger as listed in paragraph and subparagraphs of paragraph 3 of this specification.

4.2.1 Witnessed tests.- Where the provisions of 4.2 (a and b) do not apply, factory tests shall be made on one charger of each size on order to assure compliance with the requirements of the following:

(a) Paragraph 3.2.1.1 -

(1) Performed at a temperature of minus 15°C; 5% humidity; 108 Volts and 59.2 Hz for a minimum period of six hours.

(2) Performed at a temperature of plus 50°C; 90% humidity; 130 Volts and 61.8 Hz for a minimum period of six hours.

(b) Paragraph 3.2.2 -

(1) Perform no load to full load and full load to no load tests, simultaneously with ripple test using recording devices having detachable permanent records.

(2) Test remote alarm for compliance.

(c) Paragraph 3.2.2.1 -

(1) Demonstrate compliance with charger output voltages with and without batteries connected to charger.

(d) Paragraph 3.2.2.2 -

(1) While performing requirements of 3.2.1.1d, test compliance for electromagnetic interference.

(e) Paragraph 3.2.2.3 -

(1) Test for compliance with output short-circuit for one hour, and reverse current characteristics.

(2) Test for the required shift from voltage regulating to current limiting characteristics.

4.2.1.1 Additional tests.- All chargers on order shall be tested in accordance with 4.2.1, subparagraphs 4.2.1(b)(1) and 4.2.1(c)(1).

4.2.2 Inspection results.- Upon failure of the charger to meet the above tests, it shall be rejected. Three additional chargers of the same size shall then be selected by the Government representative and identical tests performed on each. Failure of any of these three units to meet all prescribed tests shall result in rejection of the entire lot of that size on order.

Witnessing of retests shall be performed only upon certification by the contractor that cause of the failure had been eliminated from all affected units on order. Such retest witnessing shall be at the expense of the contractor as determined by the cost to the Government.

4.3 Proposed test methods.- Comprehensive test procedures and test data forms which the contractor proposes for use in conducting tests necessary to demonstrate compliance with this specification shall be prepared by the contractor. Three copies of the test procedures, including block diagrams of test set-ups and data forms, shall be submitted to the Contracting Officer 30 days in advance of the contractor's scheduled testing date.

5. PREPARATION FOR DELIVERY

5.1 Packaging.- Preservation, packaging and packing shall be in accordance with MIL-E-17555, Level "C". When more than one unit is packed in a common container, each unit shall be so identified and packaged that repacking for reshipment will not be necessary.

5.2 Marking.- Each package shall be identified with the following marking:

(a) Manufacturer's name and address

(b) Contract No.

(c) Battery charger, lead acid only

Input 120 V 60 Hz _____ Amp

Output _____ V DC _____ Amp

(d) Remote alarm

(e) Other marking as required by the IFB or contract

6. NOTES

6.1 Note on information items.- The contents of the subparagraphs are only for the information of the Contracting Officer. They are not contract requirements, nor binding on either the Government or the contractor, except to the extent that they may be specified elsewhere in the contract as such. Any reliance placed by the contractor on the information in these items is wholly at the contractor's own risk.

6.2 Ordering information.- The IFB or contract must include technical information as to battery type and equipment for use in conjunction with the charger, as follows:

(a) Battery, lead acid type

(b) Battery ampere hour capacity at an eight hour rate

(c) Connected equipment load in amperes

(d) Voltage of equipment and batteries to be powered by the charger

6.3 Tests.- A separate item for the cost of performing the specified tests is suggested in the IFB or contract. Attention is directed to provisions of 4.2.2 in event of failure of units to meet requirements.

* * * * *