FAA-R-1383
AMENDMENT-2
9 June 1971
SUPERSEDING
AMEND.-1, 6/21/63

DEPARTMENT OF TRANSPORTATION
FEDERAL AVIATION ADMINISTRATION

TECHNICAL SPECIFICATION

for

THREE CAVITY PULSED AMPLIFIER KLYSTRON, CONTROL GRID MODULATED

This amendment forms a part of FAA-R-1383 dated 1 June 1963.

Page 1, change "Agency" to "Adminstration".

Page 3, make the following changes to the first column:

"MIL-E-1" to "MIL-E-1 and MIL-STD-1311"; "4.10.8" to "1301"; "4.10.4.1" to "1256"; "4.10.1.1" to "1231"; "4.9.2" to "Appendix C"; "4.9.5.1" to "1111"; "4.10.14" to "1331."

Page 3, Production Tests; Power Output: Change referenced notes from "4, 5, 7 and 10" to "4, 5, 7 and 10a, b."

Spectrum: In test condition column change "F = 960 - 1215 Mc/sec" to "F = 960 and 1215 Mc/sec."

Page 4, make the following changes to the first column:

"MIL-E-1" to "MIL-E-1 and MIL-STD-1311"; "4.15.5" to "4004"; "4.9.19.6" to "1031"; "3.7.2" to "3.6.2 (3.6.4)"; delete "4.9.18"; 4.9.18.1.5" to "1136"; "4.9.19.7" to "1031"; delete "4.11.3"; "4.11.4" to "4.6.2."

Page 6, Note 5: In the last sentence, change "production test purposes only." to "test purposes."

Page 7, Note 9: In line 1, delete "4.10.4.1" and substitute "Method 1256."

Page 9, Note 15c: In line 1, delete "X_1", "X_2" and "Y_2", and substitute respectively "X", "Y", and "Z". In line 2, delete "3.9.1" and substitute "3.4 and Appendix B."

Page 15, Figure 3: Add the following:

"NOTE: Each heater and cathode lead assembly (H and H-K) shall be 24 1/4 $\pm$ 1/4 inches in length."

Attachment 1

Page 1, Bill of Material: Under description change "Hair" to "Fibre". Delete "SK-C-50750-6" and "Metal Shipping Container" and substitute "A-5949" and "Corrugated Fibreboard Carton" respectively.

Delete "Lead and Wire Seal, American Lead-Casting Co., Brooklyn, N.Y." and Quantity "1".

Pages 1 and 2, OPERATION: Replace paragraphs 4 through 8 with the following new paragraphs:

"4. Place Inner Fibre Pack in barrier bag, with tube antenna in line with one seam of barrier bag.

5. Partially seal barrier bag.

6. Evacuate excess air from bag and finish seal.

7. Place inner packed unit in shipping carton, with barrier bag seams in corner of carton so tube antenna is in corner.

8. Close carton and tape all seams securely using 3" w/p/tape.

9. Label and mark per MIL-E-75 or contract requirements."

Page 3, SK-E-50750-5A: In the title, change word "HAIR" to "FIBRE".

Delete NOTES 1 through 4 and substitute the following in lieu thereof:

1. Cushioning shall be manufactured of molded rubberized fibre and shall be subject for performance tests to military specification MIL-E-75 (Electron tube specification), paragraph 4.5.2 "Rough Handling Tests". If tests are to be conducted by instrumentation, the shock level shall not be higher than 15 G's when dropped in accordance with MIL-E-75.

2. These cushions shall be manufactured in accordance with federal specification PPP-C-1120 except as follows: Since the weight of the instrument to be packaged exceeds the requirements of Type N in all bearing areas of these pads, the bottom, sides and top of each bearing area of each shall meet the following exceptions on compression resistance tests as described below.

3. Compression resistance (minimum and maximum) as per paragraph 4.4.3.1 or 4.4.3.2 of this specification. When loads of 150 pounds are applied to complete bearing area of full length of the cavities, the deflections shall not be more than 8% or less than 5%. When loads of 300 pounds shall be applied to complete bearing area of full length of the cavities, the deflection shall be not more than 16% or less than 11%. When loads of 500 pounds shall be applied to complete bearing area of the full length of the cavities the deflection shall not be more than 23% or less than 16%.

4. Cushion material shall have a suitable binding material which shall remain flexible at temperatures of -40°F or +160°F. All measurement tolerances shall be plus or minus 1/8 inch.

Page 5: Remove Drawing "SK-C-50750-6" and substitute Drawing "A-5949" in lieu thereof.

Page 6, SK-A-50750-7: Change title to read, "MOULDED FIBRE INNER PACK FOR KLYSTRON SHIPPING CARTON."

Attachment 2

Page 8, paragraph 7.3.5: In line 8, change "(Ec)" to "(Eg)."

MAT'L:
V3C CORRUGATED
FIBREBOARD CARTON
PER PPP-B-636

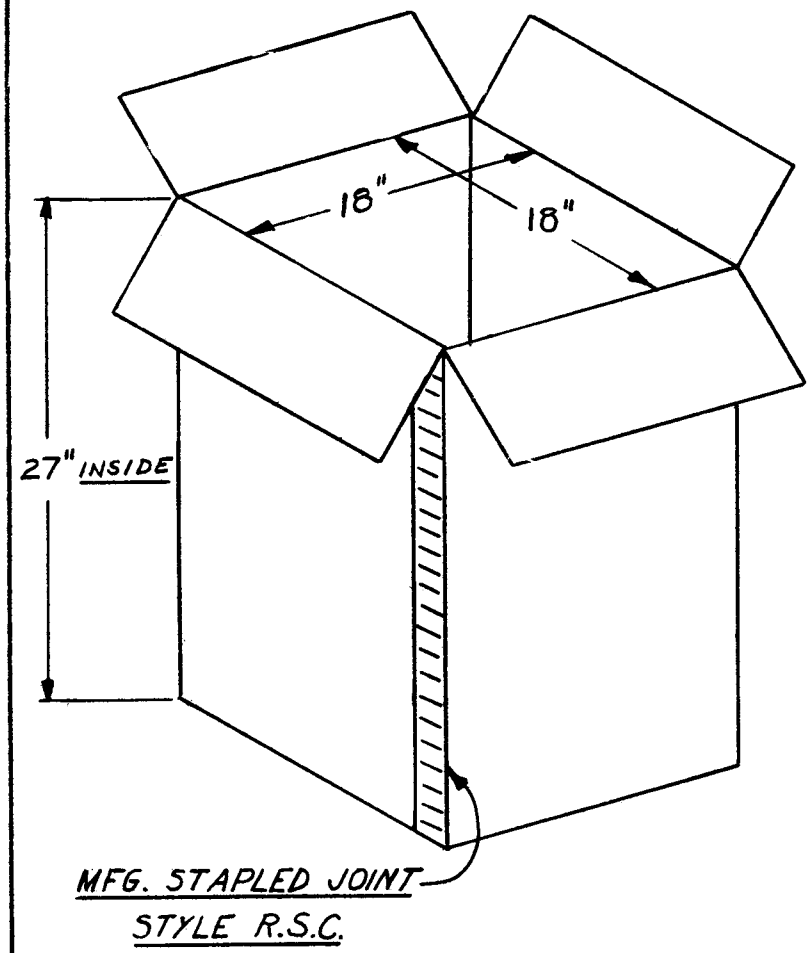

REV. LTR.	DATE	DESCRIPTION	CHECKED	APPROVED

DEPARTMENT OF TRANSPORTATION
FEDERAL AVIATION ADMINISTRATION
WASHINGTON, D.C. 20590

REVIEWED BY

DESIGNED BY

DRAWN BY

CHECKED BY

CORRUGATED FIBREBOARD CARTON

SUBMITTED BY Jacques Kendahlgren

APPROVED BY Helmuth Knapp
ACTING CHIEF, NAVIGATION BRANCH FI-210

ISSUED BY
FACILITY INSTALLATION SERVICE

DATE 6-2-71

DRAWING NO. A-5949

REV LTR

88557