ICAO CIRCULAR

CIRCULAR 212-AN/129

1988

SECONDARY SURVEILLANCE RADAR MODE S DATA LINK

Approved by the Secretary General and published under his authority

INTERNATIONAL CIVIL AVIATION ORGANIZATION
MONTREAL • CANADA

Published in separate English, French, Russian and Spanish editions by the International Civil Aviation Organization. All correspondence, except orders and subscriptions, should be addressed to the Secretary General.

Orders for this publication should be sent to one of the following addresses, together with the appropriate remittance (by bank draft or post office money order) in U.S. dollars or the currency of the country in which the order is placed.

Document Sales Unit
International Civil Aviation Organization
1000 Sherbrooke Street West, Suite 400
Montreal, Quebec
Canada H3A 2R2

Egypt. ICAO Representative, Middle East Office, 16 Hassan Sabri, Zamalek, Cairo.

France. Représentant de l'OACI, Bureau Europe, 3 bis, villa Émile-Bergerat, 92522 Neuilly-sur-Seine (Cedex).

India. Oxford Book and Stationery Co., Scindia House, New Delhi *or* 17 Park Street, Calcutta.

Japan. Japan Civil Aviation Promotion Foundation, 15-12, 1-chome, Toranomon, Minato-Ku, Tokyo.

Kenya. ICAO Representative, Eastern and Southern African Office, United Nations Accommodation, P.O. Box 46294 Nairobi.

Mexico. Representante de la OACI, Oficina Norteamérica, Centroamérica y Caribe, Apartado postal 5-377, C.P. 11590, México 5, D.F.

Peru. Representante de la OACI, Oficina Sudamérica, Apartado 4127, Lima 100.

Senegal. Représentant de l'OACI, Bureau Afrique occidentale et centrale, Boîte postale 2356, Dakar.

Spain. Pilot's, Suministros Aeronáuticos, S.A., C/Ulises, 5-Oficina Núm. 2, 28043 Madrid.

Thailand. ICAO Representative, Asia and Pacific Office, P.O. Box 614, Bangkok.

United Kingdom. Civil Aviation Authority, Printing and Publications Services, Greville House, 37 Gratton Road, Cheltenham, Glos., GL50 2BN.

Do you receive the ICAO BULLETIN?

The **ICAO Bulletin** contains a concise account of the activities of the Organization as well as articles of interest to the aeronautical world.

The **Bulletin** will also keep you up to date on the latest ICAO publications, their contents, amendments, supplements, corrigenda and prices.

Available in three separate editions: English, French and Spanish.
Annual subscription: U.S.$20.00 (surface mail); U.S.$25.00 (air mail).

FOREWORD

The ICAO Communications Divisional Meeting in April 1981 recommended the establishment of an appropriate body to develop Standards, Recommended Practices, guidance material and procedures related to secondary surveillance radar (SSR) enhancement and related data link and collision avoidance systems. In November 1981 the Air Navigation Commission (ANC) approved this recommendation and accordingly established the SSR Improvements and Collision Avoidance Systems Panel (SICASP) to advance this work.

To date, the panel has held three meetings; the first in May 1983, the second in October/November 1984, and the third in March/April 1987. As a result of the work of the panel, two circulars have been issued, concerning SSR Mode S (Circular 174) and Airborne Collision Avoidance (Circular 195). Furthermore, at its second meeting, the panel proposed amendments to the existing Standards and Recommended Practices (SARPs) for SSR systems intended to define and standardize the characteristics of SSR Mode S. Following consideration of the subject by the Communications/Operations Divisional Meeting (1985) and consultation with States and international organizations, the Air Navigation Commission recommended an amendment to Annex 10, Volume I, which was subsequently adopted by Council and became applicable on 22 October 1987 as a part of Amendment 67.

This document is the third circular resulting from the work of the SICAS Panel. It describes the background, communications features, characteristics, design, equipment and potential applications of the SSR Mode S data link. Appendices provide a glossary of relevant terms and a summary of open systems interconnection (OSI) considerations. In view of the stage of development of a conceptual architecture, and the development and standardization activities under way elsewhere, this circular on the Mode S data link design is intended as a means of fostering interoperability with other aeronautical data link developments, as well as providing information to the international aviation community.

SECONDARY SURVEILLANCE RADAR MODE S DATA LINK

TABLE OF CONTENTS

		Page
Chapter 1.	Introduction	1
1.1	Data link operational considerations	1
1.2	The current status of Mode S data link	3
1.3	The need for standardization	4
1.4	Universality of data link applications	5
Chapter 2.	Mode S Communication Features	6
2.1	The structure of transmissions	6
2.2	Communication characteristics	6
2.3	Communication protocols	8
Chapter 3.	Mode S Data Link Design	11
3.1	Integration with other air-ground data links	11
3.2	Types of Mode S data link communication services	12
3.3	Message header information	12
Chapter 4.	Equipment	18
4.1	Ground data link elements	18
4.2	Aircraft data link elements	18
Chapter 5.	Advantages of a Mode S Data Link Integrated with the Surveillance Function	21
5.1	Evolutionary introduction of Mode S and its data link	21
5.2	Inherent association with surveillance information	21
5.3	Data link integrity	22
Chapter 6.	Potential Data Link Applications	25
6.1	Introduction	25
6.2	Initial ATS applications	25
6.3	Evolutionary development	28
Appendix 1.	Glossary of Terms and Abbreviations	31
Appendix 2.	Overview of the open system interconnection reference model	35

CHAPTER 1

INTRODUCTION

1.1 DATA LINK OPERATIONAL CONSIDERATIONS

Air traffic services air-ground communications limitations

1.1.1 When radiotelephony channels become congested or language difficulties exist, communication reliability can decrease to a point where flight safety and efficiency may be affected. The Mode S data link channel offers an enhanced medium for communications.

1.1.2 The existing SSR system includes a limited air-to-ground data link that provides some degree of controller workload relief in altitude verification and aircraft identification. Moreover, there is no provision for general purpose ground-to-air data link capability and as a result there are many terminal areas around the world where existing voice channels and controller communication loads reach the point of near saturation during peak traffic periods. Pilots sometimes experience long delays in obtaining clearances as well as the difficulty in obtaining clear and verified communications from air traffic control (ATC).

1.1.3 These problems can be alleviated to a certain extent by adding more controllers. Additional controllers require more radio channels, however, and the number of available voice channels is strictly limited. Increasing the number of controllers also results in an increase in the number of handoffs and co-ordination transactions between control positions on the ground. A point is reached where a reduction in the workload of controlling aircraft and communicating with pilots is offset by an increase in the workload associated with interfacing and communicating with fellow controllers.

1.1.4 The saturation of manual control capabilities in high-density airspace creates strong pressures for automated assistance in ATC control; however, automation of ATC will not provide significant controller relief unless it is also accompanied by automation applied to air-ground communications. A digital data link is thus an essential element of an advanced automated ATC environment.

Mode S data link overview

1.1.5 A Mode S SSR system provides accurate and reliable surveillance information (identification and position in three dimensions) needed to support more automated air traffic services (ATS) systems. In addition, Mode S supports a moderate capacity, reliable two-way air-ground digital data link, time-shared on the surveillance channel. The association of the Mode S data link with the SSR surveillance function and the high data integrity of this link makes it particularly attractive for the transmission of ATS messages. The data link is sufficiently flexible to support also the transmission of general-purpose messages, subject to the data rate constraints that result from the fact that the channel is shared with both Mode S and existing (Mode A and C) SSR surveillance.

1.1.6 The Mode S data link permits an interchange of information between ground-based and aircraft systems on a greater scale than could be supported by existing voice communication. This interchange of information will result from an automatic or semi-automatic transfer of digital data between the respective end-users. It can be used in a number of applications which may enhance both:

a) safety and efficiency of air traffic operations; and

b) over-all efficiency of ATS systems.

Although it is not yet possible to identify all potential data link applications in detail, a review is outlined in Chapter 6 of some initial and evolutionary applications.

Impact on existing ATS systems

1.1.7 The effect of a data link on the over-all system will depend to a large extent on the degree of automation available to the controller and pilot. There have been a number of studies on the effects of providing controllers with data link capabilities without also offering air traffic control automation. Generally, such efforts fail to significantly reduce controller workload because it is more natural and more efficient to communicate by voice than it is to input data via a keyboard.

1.1.8 Thus, it is not likely that an ATC data link alone can significantly reduce the workload of controllers until there are significant improvements in data entry techniques, such as very simple and efficient menu-based input systems or practical and reliable voice-recognition devices, tied to automatic message-formatting equipment. Such input devices provide some automation of the controller's tasks and leave more time for essential decision-making.

1.1.9 The availability of a data link will also make it possible for aircraft to interact directly with ground data bases without the use of radiotelephony (RTF). Examples of this are the extraction of weather information, such as surface observations from ground meteorological data bases, and also the downlinking to meteorological data bases of weather observations made automatically on the aircraft.

1.1.10 Many useful safety-related applications have been identified (see 6.2 below). One important safety factor in the use of a digital data link is the avoidance of garbled or misinterpreted information to the pilot. Messages sent by data link will be available for high-legibility real-time display, for filing for later retrieval, and for permanent hard-copy records. It is also possible to provide, as a pilot option in the cockpit, automatic multilingual presentation of standardized air traffic control messages to facilitate the process of international communication.

1.1.11 A further contribution arises from the fact that a pilot with access to ground-based data banks can acquire and study information pertinent to the flight at a time most suited to other activities on the flight deck.

1.1.12 In order to be used for safety-related services, an air-ground data link must have a high integrity. This means that it must have a low susceptibility to accidental or intentional jamming.

Impact on future ATS systems

1.1.13 Enhanced automation of the ATC system, made possible by the introduction of a data link, can increase controller efficiency and enhance productivity of aircraft, for example, by allowing increased use of more direct routings and more fuel efficient altitude profiles.

1.1.14 In peak traffic situations and in high traffic density areas, the availability of an air-ground data link for transmitting aircraft performance data directly to the ground will provide significant assistance to the controller in carrying out conflict resolution, spacing, and sequencing tasks. However, in order to assist the controller in performing these tasks it will be necessary for ground-to-air messages to be prepared automatically by the computer in such a way that the controller can merely approve the transmission of pre-formatted messages to the pilot. Indications of data link applications in this context are presented in 6.3 below.

1.1.15 Before such a level of automation can become a reality, there must also be available a source of high-precision surveillance data and a means for quick-access, reliable, digital data communications interfaced directly to the ATC computer and the surveillance system so that there is no possibility for ambiguity, error, or delay in locating or identifying aircraft or in correlating messages with surveillance targets.

1.2 THE CURRENT STATUS OF MODE S DATA LINK

Mode S implementation

1.2.1 Mode S is being implemented in at least one State, following extensive development activities in co-operation with the international community. Over 100 Mode S ground stations are being procured with initial deployment scheduled for 1989.

1.2.2 Several States are completing the implementation of the first phase of a two-step enhancement to the existing SSR system. The first phase implements the monopulse direction-finding capability that is essential to the ultimate implementation of Mode S.

SICASP data link activity

1.2.3 The SICAS Panel is developing draft Standards and Recommended Practices for Mode S data link systems, which would include message coding techniques for ATS and safety-related messages as well as documentation of specific applications which Mode S data link could support. The panel is expected to accomplish this task in late 1990.

1.3 THE NEED FOR STANDARDIZATION

Standardization within the Mode S system

1.3.1 The Mode S with its integral data link is a new system that is now being implemented. The Mode S data link differs from a simple point-to-point data link in that every ground station must be able to communicate with all Mode S-equipped aircraft within coverage and every Mode S transponder must be able to communicate with ground stations of any State.

1.3.2 In general, a data link service that enhances ATS efficiency or increases flight safety will have universal value. In order for such services to be made readily available for international flights, it is important to establish a procedure for standardizing the messages used to carry out the service. Such standardization will allow international air traffic to take advantage of useful data link services without the need for changes in aircraft equipment or application software each time a State boundary is traversed.

1.3.3 Although it is possible for individual States to autonomously develop new Mode S data link applications, it is to the advantage of all States to employ existing internationally standardized Mode S applications wherever possible. If the development of new applications affecting international civil aviation is undertaken by a State, these new applications should be submitted for international standardization at the earliest possible date to complement existing standardized applications.

1.3.4 In order to facilitate the development of common applications it is also necessary for Mode S data link protocols and control header formats to be common from State to State. International standardization of Mode S data link message content and procedures is therefore needed at several levels.

Standardization: open systems architecture

1.3.5 In addition to the need for international standardization within the Mode S data link system itself, the Mode S data link is being structured to conform to the greatest extent possible with the principles of the International Organization for Standardization (ISO) open systems interconnection (OSI) reference model.

1.3.6 Communication systems have traditionally been devised to solve specific problems in specific application environments. This is often acceptable where both current and future application requirements are well-known and unchanging. However, if new application requirements are anticipated, or if existing application requirements are expected to change with time, the associated communication system changes can be expected to consume increasing amounts of time and will tend to become increasingly costly. These costs represent the primary disadvantage of a "closed system" architecture in an evolving application environment.

1.3.7 In order to avoid these comprehensive communication system modifications, a standard communication network interface may be defined for use

by the various user applications. Communication performance requirements may then be characterized and the resulting communication interface standardized, thus allowing the replacement of existing applications or the integration of new applications with minimal impact on the supporting communication network interface.

1.3.8 This standardization of the communication interface is the objective and essence of the "open system". Such a system is "open" (at the defined interfaces) to interoperation with other similarly open systems.

1.3.9 The open systems interconnection standards developed by the ISO define the standard interfaces required to construct an open data communication system. This standardization will allow the Mode S data link to be integrated with other air-ground data links and ground communications networks, most of which also conform to the OSI model. Designing the communication features of Mode S in this way will allow them maximum flexibility to evolve to meet future data communication requirements. (See 4.1 below and Appendix 2).

1.4 UNIVERSALITY OF DATA LINK APPLICATIONS

Interoperability of data link systems

1.4.1 Data links enable computer-computer digital communication systems and as such can transfer any digital messages between two end-users. Adherence to an open systems architecture in the design of a data link allows the interoperability of data links. Messages could therefore conceivably be routed over alternate data links depending on such criteria as availability, integrity, cost, access delay, etc.

1.4.2 Each type of data link has specific characteristics that make it suitable for specific environments and applications (e.g. Mode S supporting ATS in areas of SSR coverage and satellite supporting ATS in other areas). It is important not to design the data link to specific applications, otherwise the data link may not be suitable for new or modified applications. A goal of Mode S is to provide a communications architecture that permits interoperability of aeronautical data links. In order to achieve this interoperability, the Mode S system is being designed to conform to the ISO open systems interconnection reference model standards.

CHAPTER 2

MODE S COMMUNICATION FEATURES

2.1 THE STRUCTURE OF TRANSMISSIONS

2.1.1 Mode S employs a four-megabits per second uplink data rate and a one-megabit per second downlink data rate. All Mode S interrogations and replies consist of bursts of digital data containing either 56 or 112 bits. Mode S "formats" define the structure of the bits within the 56 or 112 bit bursts. All formats use the last transmitted 24 bits as an address/parity field. The three types of formats which follow are used as shown in Figure 2-1:

a) Surveillance formats: Surveillance interrogations and surveillance replies contain 56 bits, which either are surveillance-related or can be used to control data link protocols. There is no data link message transfer capability.

b) Comm-A/B formats: The Comm-A (interrogation) and the Comm-B (reply) formats contain 112 bits. Fifty-six bits serve the surveillance and communications control functions as indicated above and 56 bits are available for data link messages.

c) Comm-C/D formats: The Comm-C (interrogation) and the Comm-D (reply) formats contain 112 bits. Thirty-two bits are used for parity and control and 80 bits are available for data link messages.

2.1.2 The 56 data link bits in Comm-A/B and the 80 data link bits in Comm-C/D comprise the "message fields" used by the Mode S data link for information transfer. These message fields are forwarded unchanged by the Mode S ground station and by the Mode S transponder in the aircraft.

2.1.3 Since each of these message fields is relatively short, protocols have been defined for the Mode S ground station and transponder (and associated data link processors) for combining transmissions into groups that allow the transfer of larger blocks of data. These protocols are described in 2.3 below.

2.2 COMMUNICATION CHARACTERISTICS

Channel capacity

Channel access

2.2.1 Mode S ground stations will typically employ rotating antennas. For a terminal Mode S antenna with a nominal four-second scan period and a three-degree beam, the ground station has data link access to each aircraft during an approximately 33 millisecond beam dwell time once every four seconds.

SURVEILLANCE INTERROGATION (56 BITS)

FORMAT NO. (5 BITS)	SURV. & COMM. CONTROL (27 BITS)	ADDRESS/PARITY (24 BITS)

SURVEILLANCE REPLY (56 BITS)

FORMAT NO. (5 BITS)	SURV. & COMM. CONTROL (27 BITS)	ADDRESS/PARITY (24 BITS)

COMM-A INTERROGATION (112 BITS)

FORMAT NO. (5 BITS)	SURV. & COMM. CONTROL (27 BITS)	COMM-A MESSAGE FIELD (56 BITS)	ADDRESS/PARITY (24 BITS)

COMM-B REPLY (112 BITS)

FORMAT NO. (5 BITS)	SURV. & COMM. CONTROL (27 BITS)	COMM-B MESSAGE FIELD (56 BITS)	ADDRESS/PARITY (24 BITS)

COMM-C INTERROGATION (112 BITS)

FORMAT NO. (2 BITS)	ELM CONTROL (6 BITS)	COMM-C MESSAGE FIELD (80 BITS)	ADDRESS/PARITY (24 BITS)

COMM-D REPLY (112 BITS)

FORMAT NO. (2 BITS)	ELM CONTROL (6 BITS)	COMM-D MESSAGE FIELD (80 BITS)	ADDRESS/PARITY (24 BITS)

Figure 2-1. Mode S formats

Average data rates

2.2.2 The average data rate of the Mode S link to a given aircraft can be increased by employing multiple bursts of transmissions during the beam dwell. Depending upon azimuth distribution of traffic, a Mode S ground station can deliver up to eight Comm-A messages (2.3.3 below) or sixteen Comm-C messages, (2.3.6 to 2.3.8 below) each scan resulting in an average data rate of approximately 100 to 300 bits per second to each aircraft within coverage of each ground station. This data rate is adequate for transmitting the data normally employed by pilots and controllers engaged in ATC communications. This rate will also support the types of non-time-critical file transfers that might ultimately be required for automatic communications between ground automation systems and aircraft flight management systems.

2.2.3 The over-all data rate of a ground station's transmissions to all transponders can be made relatively high if the channel is time-multiplexed and managed efficiently by the ground station. If the ground station employs an electronically scanned antenna, all of the inherent channel capacity can be realized.

Access delay

2.2.4 The connection between a Mode S ground system and an aircraft is dependent on the current position of the antenna beam. Initially at least, the majority of Mode S ground stations will use mechanically rotating antennas. This consequently introduces an access delay between the ground station and the transponder which may last up to one scan period. The average access delay is therefore one half the scan period of the antenna. For airport ground stations the scan period is typically about four to six seconds. En-route ground stations will typically scan at about an eight to twelve-second period. Thus, the average access delay ranges from two to six seconds. The use of electronically scanned antennas or airport communication systems based on omnidirectional antennas would allow an access delay in the order of milliseconds for priority messages.

2.3 COMMUNICATION PROTOCOLS

Message classes

2.3.1 Two classes of messages are supported: Standard-length messages (SLMs), which are relatively short (56 bits), and extended length messages (ELMs) which are longer (up to 16 x 80 bits, i.e. 1 280 bits). Provision is made to link up to four SLMs and up to 32 ELMs. This linking is transparent to the user.

Standard-length message (SLM) protocols

2.3.2 Standard-length messages are contained in the 56-bit message field of the Comm-A/B formats and are transmitted in addition to surveillance and communications control data (see Figure 2-1). This message class is intended for priority information, i.e. traffic that cannot tolerate a delay of more than a few seconds.

Uplink standard-length messages

2.3.3 In the ground-to-air direction, linked standard-length messages may consist of from one to four 56-bit Comm-A message components, each transmitted in a separate Comm-A interrogation. Each component is accompanied by control fields which provide:

a) a code identifying the transmitting ground station; and

b) the position of the component in the message (first, intermediate, final, or only).

Downlink standard-length messages

2.3.4 Messages in the air-to-ground direction can be initiated in two ways:

a) the ground system, by inserting a code in its interrogation, can request data from a specified source on the aircraft. The identity of the required data source is indicated in the interrogation. The data must be placed in the Comm-B message field of the reply; and

b) when the aircraft data system initiates a message to the ground, it puts a special code in the downlink request field of its replies to surveillance or Comm-A interrogations. Ground stations recognize this code and, on a later interrogation, request that the data be sent to them in the Comm-B message field.

2.3.5 In the same manner as with the uplink SLM, a Comm-B message initiated by the aircraft contains control information to permit linking up to four 56-bit components.

Extended length message (ELM) protocols

2.3.6 ELMs can be up to 1 280 bits long, and are transmitted in segments of 80 bits using a special protocol. Each segment is contained in a Comm-C interrogation or a Comm-D reply (see Figure 2-1).

2.3.7 ELMs use channel time more efficiently than do SLMs because they use Comm-C and Comm-D formats that provide 80 rather than 56 bits of information, and because up to sixteen interrogations can be acknowledged on the uplink by a single reply, or sixteen replies can be elicited on the downlink by a single interrogation, thus conserving channel time. However, surveillance functions must be performed separately because the Comm-C and Comm-D interrogation and reply formats do not contain surveillance control fields.

2.3.8 Provision has been made to link up to 32 ELMs which provides the capability to handle message lengths of up to 40 kilobits. The transfer of a message of this length using this capability can take many scans and should therefore only be used for low priority messages. During the transfer of a message of this length, the Mode S data link can still transfer high priority messages such as those from ATC with the normal Mode S delivery delay.

CHAPTER 3

MODE S DATA LINK DESIGN

3.1 INTEGRATION WITH OTHER AIR-GROUND DATA LINKS

Conceptual data link architecture

3.1.1 The design of the Mode S data link control features is based upon an architecture in which Mode S can be one of several integrated air-ground data links, as shown in Figure 3-1. This approach has significant advantages for data link users:

a) Common avionics functions (e.g. display devices) can be shared.

b) Messages can be re-routed over an alternative data link if the intended data link is not currently available.

Use of the OSI reference model

3.1.2 To support the goal of data link integration, the Mode S data link is being designed to conform to the International Organization for Standardization's OSI reference model to the greatest extent possible. This is consistent with the approach being taken by other aeronautical data links. A summary of the OSI Reference Model is contained in Appendix 2.

3.1.3 The use of the OSI layered approach for the Mode S data link design enhances integration with other OSI-compatible data links since, for example, it leads to a design in which Mode S specific control-header elements are separable from the remainder of the control header. This makes it possible to remove Mode S specific information as it leaves the Mode S data link processing functions. The layered approach also ensures that a change to one element of the data link does not propagate throughout the entire system, and thus provides a more robust design.

3.1.4 Many of today's ground-ground communication systems have adopted the principles embodied in the OSI model. The adoption of the OSI model in structuring the Mode S communication system will allow it to be more easily integrated with these ground communication systems, enabling a complete air-ground communication system to be established.

Scope of the Mode S data link SARPs

3.1.5 The SARPs material being developed for the Mode S data link specifically defines the communication formats and protocols that are required for Mode S data link processing. It is written in a manner consistent with a multiple data link architecture. However, it contains sufficient material on requirements for data link processing beyond the Mode S data link processor (DLP) to permit the implementation of the Mode S data link in a "stand-alone" mode for those cases where a multiple data link installation is not required.

3.2 TYPES OF MODE S DATA LINK COMMUNICATION SERVICES

Alternatives

3.2.1 Two types of data link communication service are being developed for Mode S data interchange. These service types, called "connectionless" and "connection oriented", are distinguished by the manner in which control information is handled on the Mode S link. The connectionless service is intended for short operational messages, or for those that are exchanged infrequently between an aircraft and a ground system. The connection-oriented service is intended for long operational messages or for those that are exchanged frequently between an aircraft and a ground system. It can also be used to make sure that a channel will be available when needed, as in ATC applications. These differences affect the efficiency of Mode S link operation in terms of the overhead required for the data link control header. The choice of service type is made on the basis of operational message length, frequency of transmission and assurance of channel availability. The user is generally unaware of this distinction.

Connectionless service

3.2.2 This service is characterized by the inclusion of a complete control header (e.g. source and destination addressing) in each message. Thus each connectionless message is self-contained and does not depend on any prior action to establish control parameters.

Connection-oriented service

3.2.3 This service is characterized by the setting up of a channel on the Mode S data link. The channel set-up defines the channel control features such as message source, destination, and priority for a particular channel number, and allows checking of channel availability in the same way as an initial RTF call. Once a channel is opened, all subsequent messages need only contain the channel number in their message control header. This channel number control header is significantly shorter than a connectionless control header and thus provides increased efficiency for cases where sufficient messages are to be transferred to justify the one-time overhead of the channel set-up action. Once established, a channel permits the continuation of a message delivery transaction across ground station boundaries, if ground Mode S data link processors (DLP) are interlinked.

3.3 MESSAGE HEADER INFORMATION

Control header architecture

3.3.1 Headers are required to control the flow of messages through the communication system depicted in Figure 3-1.

Mode S

3.3.2 The section of the control header labelled "Mode S" in Figure 3-2 identifies the information that is specific to the Mode S data link. This includes information to control message linking.

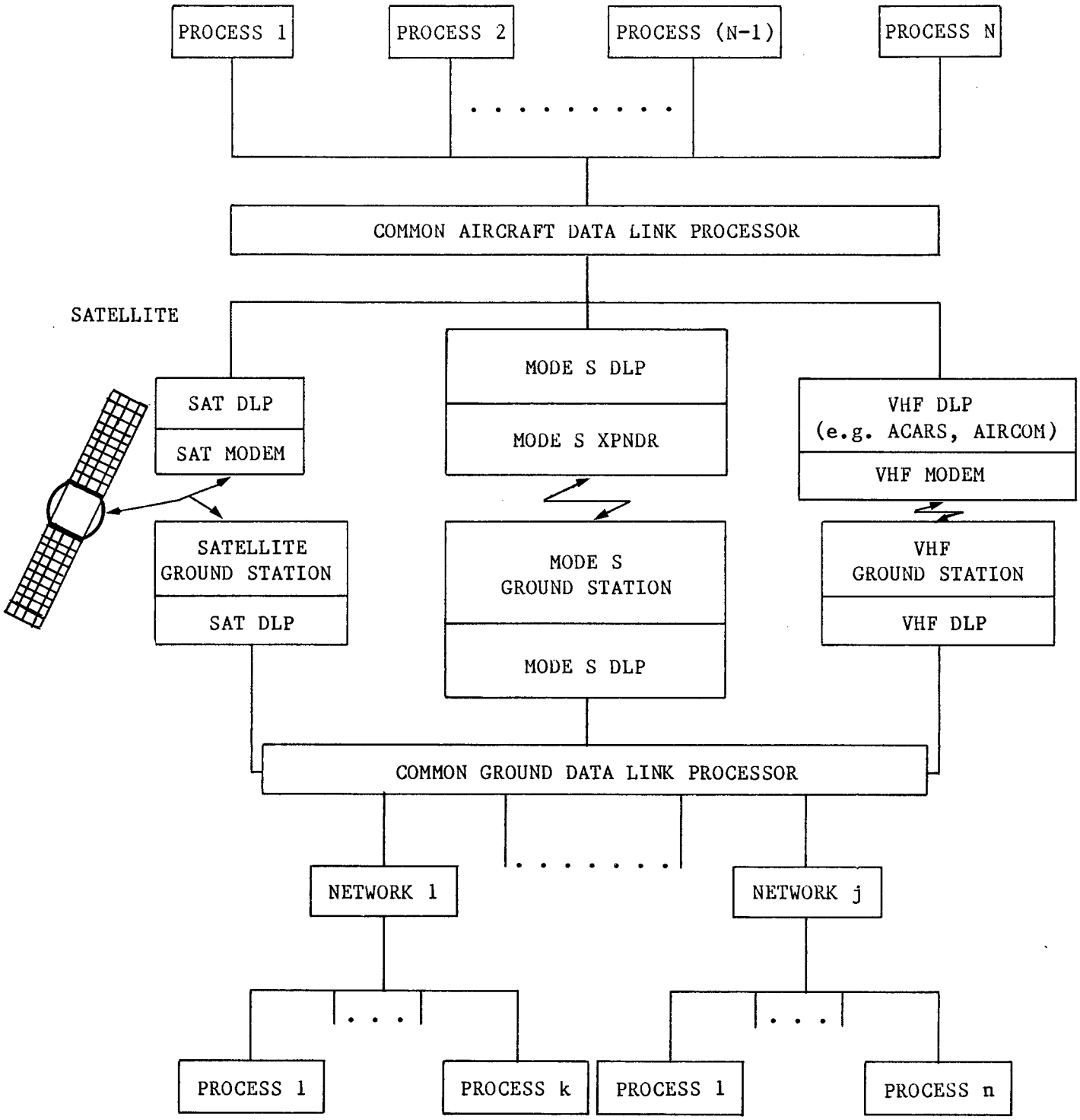

Note.- DLP - data link processor

Figure 3-1. Conceptual data link architecture

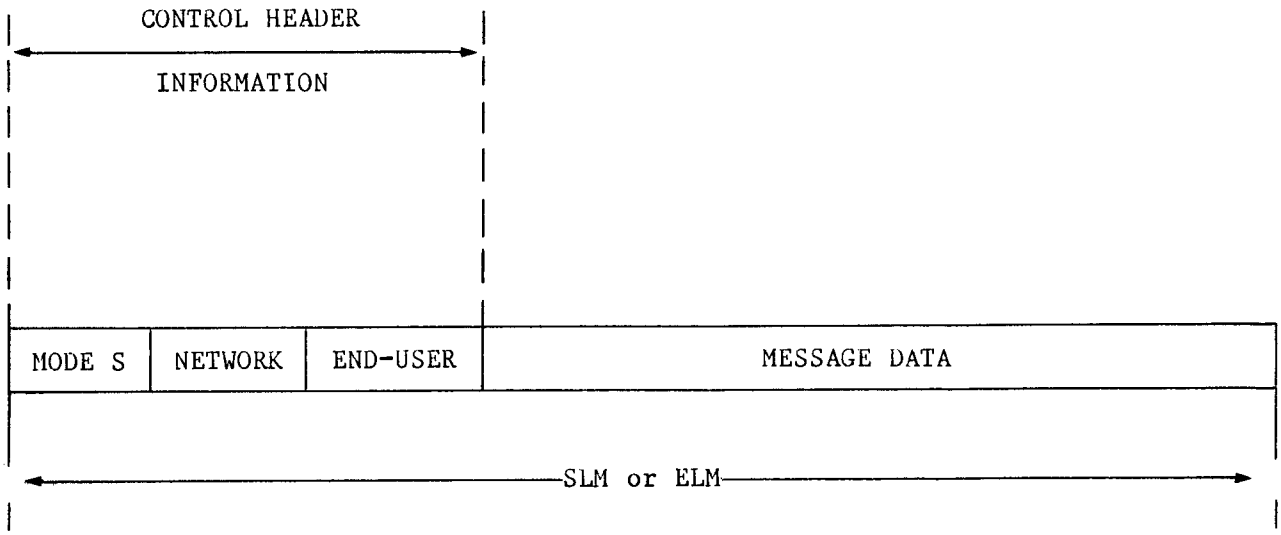

Mode S Information

Message Linking Coding

Network Information

Destination Address
Source Address

End User Information

Response Request
Message Number
Code Identification

Figure 3-2. An example of an operational message including a control header

3.3.3 For uplink messages, this information is interpreted by the Mode S DLP and removed from the control header before the message is delivered to higher layer functions. On the downlink, the Mode S DLP generates this information and adds it to the header before transferring the message to the Mode S transponder.

Network

3.3.4 The section of the control header labelled "network" in Figure 3-2 identifies information that is common to all data links and allows the data to be routed to the end user. This includes information that defines the source and destination address for the message. The Mode S DLP and other DLPs use this information to make message-handling decisions.

End-user

3.3.5 The section of the control header labelled "end-user" (i.e. the OSI transport, session, presentation or application layers, see Appendix 2) in Figure 3-2 identifies information that is exchanged between end-users and is transparent to all data links. This section is shown for information only, since all data links view it as message data that is not interpreted by any DLP. The precise nature of the information is agreed to by the end-users but typically contains the control information shown, i.e. a request for a response to this message, a message number to uniquely identify this message when a query or response is generated to it, and an identification of the manner in which the message data is encoded to enable the end-user to employ the correct decoding process to the message data.

Ground and aircraft addressing

Uplink and downlink destination addressing

3.3.6 Destination addressing requirements for an air-ground data link are significantly different on the uplink and downlink. The inherent data link technical address (e.g. the Mode S address) can be viewed as the name of the addressed network (e.g. the aircraft). Additional uplink destination addressing is required only to specify the particular process on board the aircraft.

3.3.7 Downlink destination addressing is more complex. The data link technical address specifies only the ground modem (e.g. Mode S ground station). This typically is only indirectly related to the desired destination. Thus, the burden of specifying the ground destination must be handled by the downlink destination address of the data link control header.

Local versus world-wide ground addressing

3.3.8 To route information to or exchange data with a ground process, such as ATC, two types of addressing are used, namely local or world-wide (global). Local addressing is used to effect data interchange with a local ground process, otherwise global addressing is used.

3.3.9 For some data link applications, it is sufficient to provide only the desired ground function in the destination address field; for example, a request for weather data may be addressed only to the meteorological function and the request can be routed to the nearest such function. This can be thought of as an example of local addressing.

3.3.10 Local addressing is not able to satisfy all data link applications. For example, automated ATC may involve addressing to local ATC processes such as approach control. In some instances this degree of addressing may be sufficient to route the message to the desired ground process. However, it is also necessary to address a message to other than the local ATC function. In this case, additional information is required to specify the particular ATC process to receive the message. Since there is no convenient way to specify this in relative terms, for example, the "next ATC facility along my route", the ability to address other than the local ground process requires that provision be made to give its complete address in absolute terms. This results in a world-wide addressing capability.

Request/response addressing

3.3.11 When a ground process sends a message to an aircraft process, a requirement can be specified for the aircraft process to generate a response (e.g. a pilot acknowledgement to an ATC message). In this case, downlink destination address problems are eased, since the aircraft process can use the ground-provided source address of the originating message as the destination address of the response message. Further air-ground routing assistance can be provided by the identification of the Mode S ground station that delivered the originating message. This information can be used by the aircraft process in specifying a preferred downlink routing for the response message. In certain cases this can ease the requirement on ground addressing. For example, if an approach control process message is delivered via a Mode S ground station and it is the only approach control process connected to that ground station, the source addressing in the originating message need only specify "approach control". Other qualifiers, such as the name of the approach control, are not required since there is no ambiguity when the response message is received by the ground station addressed only to "approach control". This can result in reduced header address overhead in some cases.

Destination address requirements for user-initiated air-to-ground messages

3.3.12 If a downlink message is not a response to an uplink message, the aircraft process is responsible for specifying the ground destination address. This is typically the complete address, i.e. the function plus additional qualifiers to specify an unambiguous address. The ground can assist the aircraft process in obtaining the complete address. For example, the ground can maintain an addressing table in the avionics indicating the current appropriate qualifiers for a particular process, such as a qualifier of "Boston Center" for the addressed function "en-route ATC".

Consistency of addressing across ATS data links

3.3.13 Where more than one distinct physical data link such as the Mode S link and a satellite-based ATS link primarily serve similar functions, they should be standardized to use the same address coding where messages for both links are handled in common in order to allow for efficient forwarding of such messages.

CHAPTER 4

EQUIPMENT

Figure 4-1 presents the relationship of the Mode S data link system elements to other data link elements of the architecture shown in Figure 3-1.

4.1 GROUND DATA LINK ELEMENTS

Principal elements

4.1.1 The principal ground elements for the Mode S data link system are the Mode S ground station and the Mode S ground DLP.

Mode S ground station

4.1.2 A Mode S ground station provides the Mode S modulator/demodulator (modem) function. Most of the data link functions required for a Mode S modem are already provided in a Mode S ground station configured solely for Mode S surveillance service. As the Mode S data link activity grows, additional processing capacity and transmitter duty-cycle performance may be required to handle the increased channel activity required for data link service.

Mode S ground data link processor

4.1.3 The Mode S ground DLP is a major ground element of the Mode S data link. Its functions include the segmenting of messages for transfer over the Mode S data link and assistance in message routing. Basically it provides the interface between those elements that are specific to the Mode S data link and those that are common to all data link systems.

4.2 AIRCRAFT DATA LINK ELEMENTS

Overview

4.2.1 The principal aircraft elements for the Mode S data link system are the Mode S transponder and the Mode S aircraft DLP.

Mode S transponder

4.2.2 The minimum Mode S transponder adopted for international use provides for SLMs. Thus Mode S-equipped aircraft provide, among other functional elements, the modem for minimum data link installations. More capable installations will likely include uplink ELM capability, since this represents only a small additional cost increment over the minimum data link transponder.

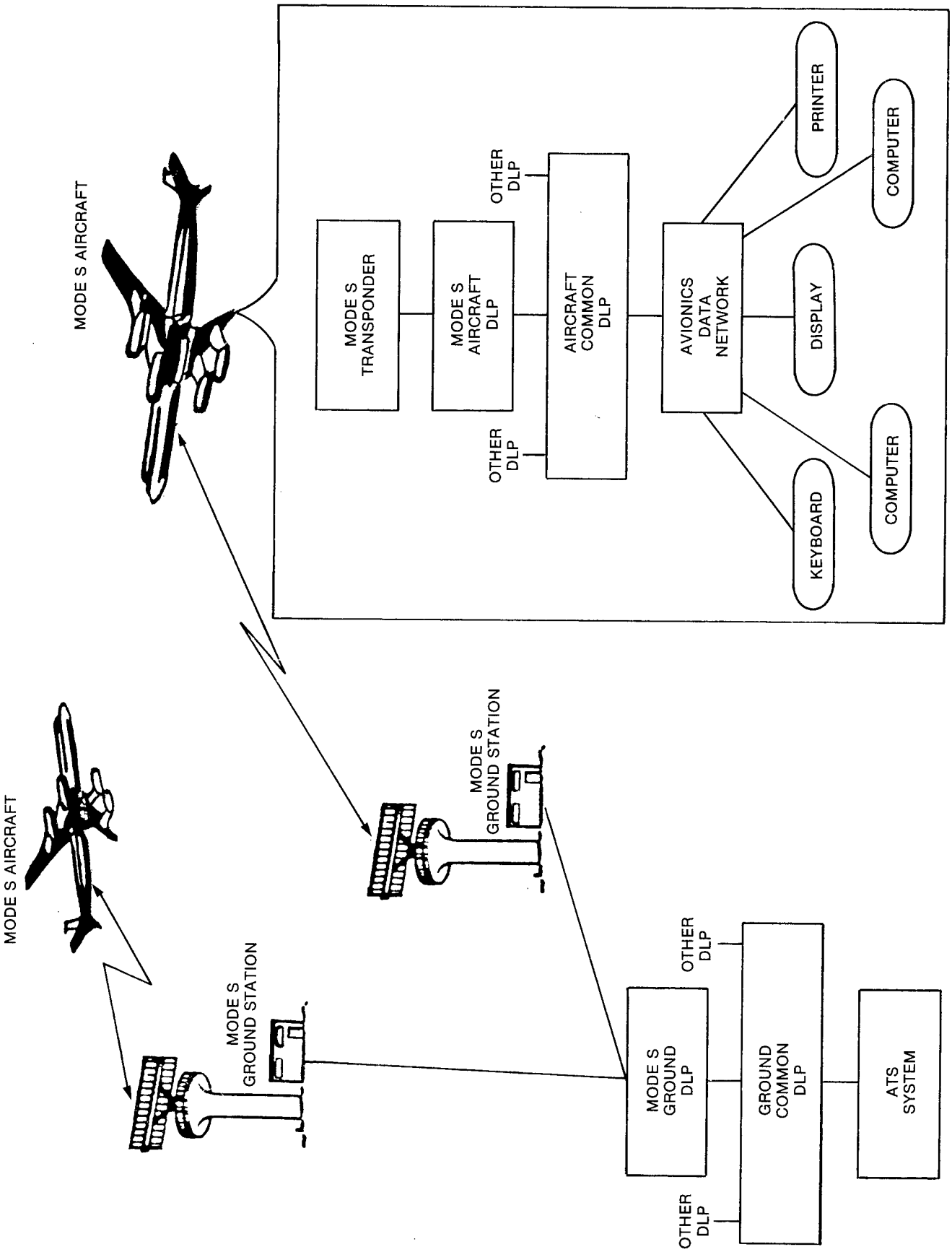

Figure 4-1. Mode S data link elements

Mode S aircraft data link processor

4.2.3 The Mode S aircraft DLP performs gateway and processing functions similar to the ground DLP. It is likely that some or all of the data link elements may be integrated into a single piece of equipment. For example, incorporating the Mode S aircraft DLP in the transponder eliminates the transponder-to-DLP interface and may lead to a simpler installation. For single data link installations, it is also likely that the aircraft common DLP and the Mode S aircraft DLP functions will be combined.

CHAPTER 5

ADVANTAGES OF A MODE S DATA LINK INTEGRATED WITH THE SURVEILLANCE FUNCTION

5.1 EVOLUTIONARY INTRODUCTION OF MODE S AND ITS DATA LINK

Use of Mode S equipment

5.1.1 The ground and aircraft modems of the Mode S link are available when the Mode S surveillance function becomes operational in a region. This makes it possible to implement Mode S data link applications in an evolutionary manner.

Use of available frequency channels and time slots

5.1.2 Mode S ground stations and transponders will be capable of handling data link transmissions without further requirement for frequency channel allocations. Standard-length Mode S data link messages are simply appended to normal Mode S surveillance transmissions. Time slots are allocated for extended length Mode S data link transmissions as part of the basic Mode S channel management design, and no new frequency channel allocation is therefore required. Consequently, it will be possible for Mode S surveillance equipment to be employed for data transmissions immediately upon its certification for surveillance use.

5.1.3 It is possible for the Mode S system to provide data link service on a single channel because all transmissions are detectable only within line of sight. As with the existing SSR system, large numbers of ground stations in local areas with overlapping coverage can be operated without mutual interference. These co-ordinated clusters of ground stations can be replicated every few hundred miles because of the line-of-sight limitation of the transmissions.

Eventual broad airspace data link coverage

5.1.4 The replacement and upgrading of existing SSR ground stations by Mode S will increase data link coverage at en-route altitudes in many parts of the world as well as data link coverage to low level in many terminal areas.

5.2 INHERENT ASSOCIATION WITH SURVEILLANCE INFORMATION

Communication based on surveillance detection

5.2.1 The Mode S data link is well matched to the requirements of an ATC system. The Mode S surveillance system knows not only where the aircraft are, but also how to address messages to them. The Mode S address used for surveillance also serves as the communication address. It is also possible to directly associate the Mode S address with the aircraft identification (see 6.2.3 below). A number of applications require both surveillance and data link availability.

5.2.2 For example, it would be possible to indicate automatically to an aircraft that it is straying into restricted airspace if that aircraft is under Mode S surveillance and reports a Mode S data link capability. The Mode S data link will provide an open channel to any aircraft with Mode S data link capability that is within surveillance cover.

Simultaneous coverage

5.2.3 In data communications systems, mobile terminals frequently move in and out of areas of coverage. A major problem with such systems is that of monitoring and updating the coverage status of the individual mobile stations. The Mode S data link has a distinct advantage over conventional mobile data link systems in this respect. Mode S data link coverage coincides exactly with surveillance coverage. When surveillance is operational, the data link is also automatically established. When the link is used for ATC communications, its coverage coincides exactly with the airspace of concern to the ATC system and the controller. In addition, the ATS of each State normally has control over the Mode S link. There is no contention for channels or for priorities. Message delivery priorities can always be set to match the ATC priorities of safety and efficiency of traffic flow. The link is always assured to be available when it is needed.

5.3 DATA LINK INTEGRITY

General integrity considerations

5.3.1 Many aspects of the total Mode S design contribute to the integrity of its data link. These range from details of the protocols to the broad features of system design.

Message protection

5.3.2 The Mode S air-ground link is designed with a high degree of integrity to support its necessary surveillance functions. The modulation techniques used on the uplink and downlink provide resistance to interference and multipath. In addition, cyclic redundancy check codes are used on both the uplink and the downlink to achieve undetected error probabilities of less than one in 10^7 112-bit messages between the Mode S ground station and the transponder. The coding is also designed to allow limited error correction on the downlink.

5.3.3 The transponder standards require an interface of the same order of reliability between the transponder and its associated data link processing equipment. Thus, there is a high degree of message protection inherent in the Mode S air-ground link. This data delivery integrity can be exploited to provide a highly reliable communication channel for those communication applications that require extreme reliability (for instance, to allow critical aircraft manoeuvres to be made on the basis of a single transmission from the ground).

Integrity of the Mode S radio frequency communication link

Line-of-sight coverage

5.3.4 The line-of-sight limitation that constrains the coverage area of a Mode S ground station enhances the integrity of the Mode S data link for the reasons that follow:

a) Since complete coverage of a State's airspace typically results in multiple Mode S ground stations with considerable overlapping coverage, the loss of a single ground station due to failure or channel interference would disrupt at most a small fraction of the airspace.

b) An interference source on the ground would be visible to only a small number (typically one or two) of the ground stations in a region. Other ground stations would be unaffected because of line-of-sight screening.

Narrow antenna beam

5.3.5 The use of a narrow-beam antenna by the Mode S ground station reduces the sensitivity of the ground station receiver to accidental or intentional jamming. Unless it is in the sidelobes of the antenna, an airborne interference source will typically affect an azimuth sector of one beam width, typically less than one hundredth of the total coverage area of a ground station. An interference source in the antenna sidelobe would prevent ground station operation. However, a single interference source is unlikely to be in the sidelobes of more than one ground station. Thus, the impact of a single interference source would be modest in a multisensor environment with overlapping ground station coverage.

High effective radiated power

5.3.6 The integration of a data link into the Mode S surveillance function provides a measure of communications integrity on the ground-to-air link. SSR interrogations are transmitted at relatively high effective radiated power (i.e. the combination of transmitter power and antenna gain). An interference source would therefore have to operate at an equivalently high power level to interrupt the ground-to-air link.

Protection against intentional jamming

5.3.7 The problem of intentional jamming of civil radio frequency (RF) communications systems must be considered when developing a data link for transmitting critical ATS messages. Because civil data link terminals will be internationally standardized and commercially available, it would not be difficult for hostile parties to obtain the equipment needed to produce signals acceptable to their receivers and processing circuitry. Furthermore, by the straightforward use of a directional antenna, a jammer could increase the peak power of the unwanted receptions relative to desired receptions. By modifying commercially available equipment to operate at higher repetition rates, communication loads equivalent to excessively large numbers of legitimate users could be generated.

5.3.8 The use of robust coding techniques and spread-spectrum signals does provide some resistance to accidental interference, but these techniques cannot prevent intentional jamming of a civil system whose signal structure is internationally standardized and openly available for commercial implementation. Thus, the distributed nature of the Mode S RF link, its narrow antenna beams, and its high effective radiated power provide a degree of immunity to such intentional interference that is unique among those RF links that are capable of handling ATS message transmissions.

CHAPTER 6

POTENTIAL DATA LINK APPLICATIONS

6.1 INTRODUCTION

6.1.1 Requirements for an air-ground data link have been discussed in Chapter 1 and considerations on its implementation presented in Chapters 2 to 5. This chapter's aim is to illustrate how the introduction of the Mode S data link could benefit ATS efficiency and/or safety.

6.1.2 Section 6.2 describes some potential Mode S data link applications which can be progressively implemented with modifications to current ATS systems and are anticipated to yield initial benefits in a mixed data link environment. Looking further into the future, Section 6.3 indicates how the introduction of advanced ATS systems, which will be needed in certain areas as discussed in Chapter 1, is anticipated to be dependent on the availability of data link in these areas.

6.2 INITIAL ATS APPLICATIONS

Surveillance enhancement

6.2.1 The incorporation of the Mode S data link into a radar data processing system makes it possible to enhance the traffic surveillance information presented to controllers. Initial benefits would accrue from the transfer to the ground of error-protected aircraft information such as identification, altitude, status and selected trajectory parameters.

Aircraft identification

6.2.2 Operational identification of aircraft is currently performed by the assignment of reusable discrete Mode A codes. The number of different codes provided by the existing SSR system is limited to 4 096. Two disadvantages result from this method of identification:

a) a separate correlation must be made between the Mode A code associated with the surveillance plot and the call sign as indicated in the flight plan; and

b) assignment of unambiguous Mode A codes is limited to those flights for which the RTF contact with ATC control units has been established.

Furthermore, there are areas of the world where more than the available number of different Mode A codes are required to cope with operational needs.

6.2.3 With Mode S data link it is possible to report directly the aircraft identification as used in Item 7 of the ICAO flight plan. When no flight plan is filed, the aircraft registration is reported. Any ambiguity as to the

radar identification of an aircraft through a Mode A identity code is thus removed. The reported aircraft identification can be either:

a) fixed for aircraft that normally use their registration as the call sign; or

b) set by the pilot for aircraft that normally use a flight number (e.g. ABC 123).

Standards for this application are contained in the Mode S SARPs.

Aircraft altitude

6.2.4 The altitude code structure employed in Mode S surveillance replies provides the capability for reporting altitude in 25 ft increments. Furthermore, because of the error protection employed, only one valid reply is required for an altitude report. When aircraft possess suitable sources of digital data, the link can be used to provide an alternative altitude report on demand for confirmatory purposes.

Aircraft status

6.2.5 Mode S data link enables aircraft to report whether they are on the ground or airborne. Such information can be useful for radar data processing, automatic association of flight plan and radar data, as well as ACAS surveillance processing.

Aircraft trajectory parameters

6.2.6 In some ATC systems radar trackers are used to predict the future position of aircraft for the purpose of automatic conflict detection and other functions. The performance of these functions can be enhanced by the downlinking of such information as heading and roll angle which allows early detection of aircraft manoeuvres.

Radiotelephony communication support

6.2.7 Various limitations experienced in voice contacts such as language difficulties, poor phraseology, misinterpretation or corruption of messages, or lack of proper acknowledgement can seriously impair the efficiency of ATC communications. The Mode S data link used in conjunction with a suitable man-machine interface may enable:

a) pre-notification of ATC intentions; and/or

b) confirmation of ATC messages to be transmitted to aircraft with high integrity.

6.2.8 In the event of RTF failure, simulation has shown that the data link provides an effective alternative channel of communication. The simulation also demonstrated that the disruption of the traffic flow usually associated with RTF failures is reduced.

Flight information

Overview

6.2.9 ATS authorities are required to provide a flight information service. This service basically includes the dissemination of essential weather and traffic information. In addition, information is provided to pilots on a request/reply basis or at the controller's discretion.

6.2.10 The data link can be used to improve and facilitate the related message exchange. This could result in:

a) reduced RTF occupancy times;

b) reduced request/response times;

c) reduced controller workload;

d) more timely dissemination of relevant information to individual pilots; and

e) eventually, a more comprehensive service than even the most experienced controllers could provide.

Weather information

6.2.11 The data link enables improvements to be made in the provision of ATS meteorological services in three principal ways. The first of these is to give the pilot direct access to meteorological data from ground-based data bases. The information available could include surface observations, terminal forecasts, winds-aloft reports, and radar precipitation summaries, in each case for locations designated in the pilot's request. Ground weather radar summaries can be presented for display in either alphanumeric or graphic formats.

6.2.12 The second improvement stems from the use of weather radars that are currently being implemented in some States for the purpose of automatically detecting the presence of conditions which are hazardous to aviation. For maximum improvement in air safety, warnings of such conditions must be sent to affected aircraft in a timely manner. Using the Mode S data link, these warnings can be quickly delivered to just those aircraft determined, by Mode S surveillance data, to be in a hazardous region.

6.2.13 The third improvement arises from the use of the link to transfer to the ground, either on request or on a regular basis, measurements made on the aircraft of the meteorological conditions relating to the air mass through which it is flying, e.g. wind-vector and temperature. With increasing importance being placed on the use of flight path prediction techniques, both in automated ATC systems and in the air, improvements in the quality of the available wind and temperature data will be necessary before these systems can be exploited most effectively. It has been established that the equipment carried on board many of today's commercial aircraft is capable of accurately measuring wind-vector and air temperature; furthermore, when these measurements are

transferred from the aircraft via the Mode S link, improvements can be obtained in the quality of meteorological data for ATS use. It is believed that data will only be required from about 15 per cent of air traffic.

6.2.14 All of the applications discussed above can be introduced on an evolutionary basis as ground facilities are upgraded and more aircraft are provided with Mode S data link capability.

Aeronautical information

6.2.15 Aeronautical information may be provided to pilots on request, and could include information such as that contained in automatic terminal information service (ATIS) broadcasts, information on changes in the serviceability of navigation aids and information on airspace class and restrictions.

Traffic information

6.2.16 Currently, traffic information can only be given to aircraft when controller workload permits. Based on accurate surveillance data, traffic information can be compiled and sent automatically via data link to aircraft. This information could aid the pilot in timely visual acquisition of conflicting aircraft, and would thus enhance flight safety in VFR/VFR and IFR/VFR encounters without increasing controller workload.

Airspace information

6.2.17 Airspace information transmitted via the data link may include minimum safe altitude warnings and airspeed restrictions. It could be expanded to provide automatically warnings to pilots against predicted incursions into control zones and other restricted areas without proper clearances. These warnings contribute to safety, because many air misses or even collisions involve VFR-aircraft that violate such restricted air space.

Navigational information

6.2.18 Modern radar data processing systems may be regarded as dynamic data bases in which present and predicted aircraft positions as well as related data are stored. Navigational information could be derived from these data and reported to an aircraft via the data link on pilot request. According to the request, the reported information may comprise position, position relative to a specified fix, or ground speed and heading data.

6.3 EVOLUTIONARY DEVELOPMENT

6.3.1 In some areas of the world, ATC is operating near maximum capacity. It may be expected that air traffic operations will increase even more over the next decades. The introduction of data link allows the direct air-ground machine-machine communication which will enhance further ATC automation, and which is essential to increase capacity and productivity.

6.3.2 During the initial transition phase, the full benefit of automation may not be achieved before all aircraft are equipped with the appropriate avionics. Such automation should be designed so that controller workload is not increased in a mixed data link environment.

6.3.3 Further automation of ATS, which will be needed in some areas, is anticipated to depend on data link availability, in the same way that present systems are dependent on Mode A/C for easy aircraft identification and automatic flight plan correlation. Such automation is likely to take place in an evolutionary way. In the early stages, the automated ATS system could provide additional information to assist the controller in conflict prediction and prevention, for example. This information could be derived from aircraft downlinked data, such as next waypoint and estimated times over, without increased controller workload. Conversely, aircraft crews could receive automatic clearance confirmations, when they are already input by controllers, and pre-notifications such as for the next RTF frequency.

6.3.4 In later stages the ATS system may evolve such that advice to manage air traffic will be generated automatically. Such information may be approved by the controller before an appropriate instruction is transferred by data link. In addition, automatic data interchange may take place between flight management systems and the ATC system in order to exploit advanced three-and four-dimensional navigational capability as a means of establishing conflict-free trajectory planning. The Mode S data link will be an essential transmission medium with adequate capacity and robustness for critical applications to provide the relevant automated functions in the ATC systems and also to exchange information between the flight management system (FMS) and the ATC system.

APPENDIX 1

GLOSSARY OF TERMS AND ABBREVIATIONS

ACARS. Aircraft communications addressing and reporting system. An air-ground digital data link originated by Aeronautical Radio, Inc. (ARINC) and operated by air carriers and others for the delivery of company and weather data.

AIRCOM. An ACARS-compatible air-ground VHF digital data link operated by SITA (Société internationale de télécommunications aéronautiques).

Aircraft identification. A group of letters, figures or a combination thereof which is either identical to, or the coded equivalent of, the aircraft call sign to be used in air-ground communications, and which is used to identify the aircraft in ground-ground air traffic services communications.

Comm-A. A term referring to standard-length uplink communications.

Comm-A interrogation. A 112-bit Mode S interrogation containing the 56-bit Comm-A message field (MA).

Comm-A protocol. A procedure initiated by a Mode S ground station for delivering a Comm-A message to an aircraft.

Comm-B. A term referring to standard-length downlink communications.

Air-initiated Comm-B protocol. A procedure initiated by a Mode S aircraft installation for delivering a Comm-B message to the ground.

Comm-B broadcast message protocol. A procedure to deliver a Comm-B message that cannot be closed out by any Mode S ground station and therefore may be extracted by more than one Mode S ground station.

Comm-B reply. A 112-bit Mode S reply containing the 56-bit Comm-B message field (MB).

Ground-initiated Comm-B protocol. A procedure initiated by a Mode S ground station for eliciting a Comm-B message from a Mode S aircraft installation.

Comm-C interrogation. A 112-bit interrogation containing the 80-bit Comm-C message field (MC). (See Extended-length message.)

Comm-D reply. A 112-bit reply containing the 80-bit Comm-D message field (MD). (See Extended-length message.)

Component. A standard-length or extended-length message used as part of a linked message.

Connection-oriented service. The process of air-ground digital communications in which the definition of message control is established prior to passing messages, as in a telephone dial-up.

Connectionless service. The process of air-ground digital communications in which the definition of message control is contained within the header of the message, as in a telegram.

Control header. Information included in a message that is required:

a) to control the flow of messages through a communication system; and

b) to ensure correct interpretation and presentation of received message data by the end-user.

Downlink. Associated with signals transmitted on the 1 090 MHz reply frequency channel.

End-user. An application process that is either an originator (source) or recipient (sink) of a message.

Extended-length communication protocol. A procedure to exchange digital data using extended-length messages.

Extended-length message (ELM). A series of Comm-C interrogations (uplink ELM) transmitted without the requirement for intervening replies, or a series of Comm-D replies (downlink ELM) transmitted without intervening interrogations.

Field. A defined number of contiguous bits in an interrogation or reply.

Format. The arrangement of fields within a message.

Gateway. The interface between two communication networks.

Message. Information which is passed by one or more data blocks from one end-user to another through the different subnetworks. It includes the contents of one MA or MB field or the contents of a set of linked MA, MB, MC or MD fields (see Comm-A interrogation, Comm-B reply, Comm-C interrogation, Comm-D reply).

Message data. Information included in a message that is eventually presented to its recipient.

Message field. A group of one or more bits defined for a specific purpose within a Mode S message format. In this circular the term "message field" normally refers to an MA, MB, MC or MD field.

Message format. A Mode S interrogation or reply data block consisting of either 56 bits (surveillance formats) or 112 bits (standard-length message, extended-length message format).

Mode A/C transponder. Aircraft equipment which generates specified responses to Mode A, Mode C, and intermode interrogations but which does not reply to Mode S interrogations.

Mode S. An enhanced mode of secondary surveillance radar (SSR) that permits the selective interrogation of Mode S transponders, the two-way exchange of digital data between Mode S ground stations and transponders, and also the interrogation of Mode A/C transponders.

Mode S address. One of the 16 777 215 of 24-bit numbers (the number consisting of twenty-four consecutive ZEROs is excluded) available for assignment to Mode S-equipped aircraft to provide identification for selective interrogation. The all-ONEs address provides access to all Mode S transponders and is used as the all-call address and the Mode S broadcast address.

Mode S data link. A means of performing an interchange of digital data through the use of Mode S ground stations and transponders in accordance with defined protocols.

Mode S interrogations. Interrogations consisting of three pulses (P_i, P_{ii}, and P_{iii}) that convey information to and/or elicit replies from Mode S transponders. Mode A/C transponders do not respond to Mode S interrogations because they are suppressed by the P_i-P_{ii} pulse pair.

Mode S ground station. Ground equipment that interrogates Mode A/C and Mode S transponders using intermode and Mode S interrogations.

Mode S transponder. Aircraft equipment that generates specified responses to Mode A, Mode C, intermode, and Mode S interrogations.

Modem. A device for modulating and demodulating communications signals at the interface with the transmission medium.

Network. A communication system that consists of multiple nodes and necessarily contains means of managing the data transfer through the nodes.

OSI reference model. The Open Systems Interconnection communications system architecture defined by the International Organization for Standardization (ISO). (See Appendix 2).

Packet. The basic unit of data transferred within a subnetwork.

Process. An aircraft or ground user that is capable of generating or receiving data link messages.

Segment. An 80-bit MC or MD message field which is part of an ELM. (See Extended-length message.)

Standard-length communication protocol. A procedure to exchange digital data using Comm-A interrogations and/or Comm-B replies. (See Comm-A, Comm-B.)

Subfield. A defined number of contiguous bits within a field of an interrogation or reply. (See Field.)

Surveillance interrogation. A 56-bit Mode S interrogation containing surveillance and communications control information.

Surveillance reply. A 56-bit Mode S reply containing surveillance and communications control information, as well as the aircraft's identity code (Mode A) or altitude code (Mode C).

Uplink. Associated with signals transmitted on the 1 030 MHz interrogation frequency channel.

APPENDIX 2

BRIEF OVERVIEW OF THE OPEN SYSTEMS INTERCONNECTION (OSI) REFERENCE MODEL

1. The OSI model

1.1 General

1.1.1 As its name indicates, the OSI concept is intended to permit dissimilar data communication systems to be interconnected so as to allow the faithful transfer of messages of arbitrary content without regard to the technical differences between the networks and the media through which the messages are transferred.

1.1.2 The goal is achieved by structuring each of the interconnected data communication systems so that messages traverse a number of layers, each of which has a functional responsibility that is duplicated in counterpart layers in the connected system. In this way, technical differences between data transport systems can be accommodated by assuring that the functions of the layers are standardized even though their physical realizations are not.

1.2 Layered architecture

1.2.1 The OSI reference model defines seven functional layers (physical, data link, network, transport, session, presentation and application) with responsibilities ranging from transfer of data on the physical (radio, wire, fibre, etc.) channel itself to support of the initial generation of messages by the sender or support of final processing of messages by the recipient. Each layer performs a well-defined operation and is defined so that information flow across the layer boundaries is minimized.

Layer definition

1.2.2 The physical layer controls the access to the transmission medium. The data link layer provides for the accurate transmission of bits between two end points.

1.2.3 The network layer manages the various link connections in an efficient manner, performing such tasks as keeping track of routing decisions when multiple link connections are available and segmenting the data as necessary. Its functions are only related to intra-network tasks. It consists of three sub-layers: the subnetwork access facility (SNAcF) which is the interface to the data link layer; the subnetwork-independent convergence facility (SNICF) which provides the internetworking protocols and the interface to the transport layer; and the subnetwork-dependent convergence facility (SNDCF) which operates between the SNICF and the SNAcF, allowing a functionally identical SNICF for all connected subnetworks and a SNAcF which can vary from subnetwork to subnetwork. The SNDCF, as a consequence, need not exist in some

implementations, depending on the similarity of the subnetworks involved. For convenience this division can be referenced as the convergence protocols (the SNDCP and SNICP) and the subnetwork protocols (the SNAcP).

1.2.4 The subnetwork provider can implement the convergence protocols as an integral part of the subnetwork protocols. In this case only one header for the network layer need be used. The other possibility is that the subnetwork facility and the convergence facility are implemented as two separate entities. In this case each may have its own header. Generally, when adding an internetwork function to an existing subnetwork (not necessarily adhering to the OSI reference model) the subnetwork facility and the convergence facility (the internetwork facility) would be two separate entities.

1.2.5 The transport layer acts as an interface between the remaining upper layers and the lower layers, i.e. the network, link and physical layers. It shields the upper layers from the network specific operations and provides a connexion between the two end-users of the communication system.

1.2.6 The upper layers, session, presentation, and application, are not concerned with the method of transmittal of the data while the lower layers are. The session layer's function is that of establishing control between the two end-user entities. The presentation layer contains functions of general use which support the application layer, such as encryption or compression. The application layer controls access to the lower layers by the user of the system.

Layer interfaces

1.2.7 To carry out its function, each layer may add its own set of additional control fields to the transmission. However, each layer leaves the control information added by previous layers intact, treating it as data to be passed on unchanged.

1.3 Ease of modification

1.3.1 An advantage of this layered architecture is that individual layers can be changed without affecting the remaining layers provided that the interface between layers is not modified. However, much of this advantage can be achieved by strictly standardizing the interface at the gateway. This is the approach adopted for Mode S.

2. Relationship of the OSI model to an air-ground data link architecture

2.1 Data link architecture

2.1.1 Figure 1 is an idealized illustration of how three networks (an avionics data network, an air-ground network, and a ground data network) are related to the seven-layer model.

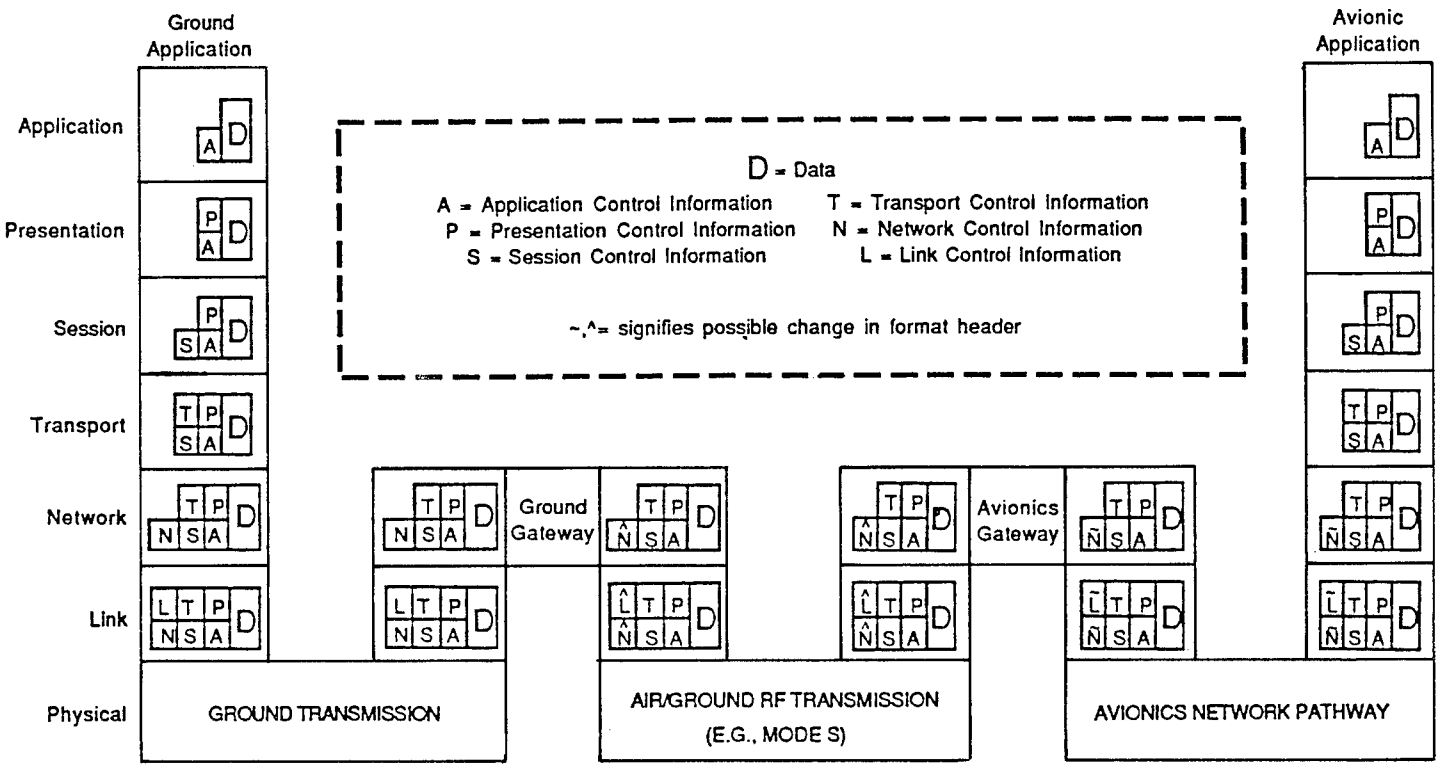

Figure 1. Idealized OSI relationship among ground, air-ground and avionics data networks

2.2 Header transparency

2.2.1 The symbols A, P, S, T, N and L represent the headers defined by the application, presentation, session, transport, network and data link layers, and which contain control information that determines the operation of the equivalent receiving layer. Each layer's header is attached to the data string and passed through intervening layers, untouched, until the destination layer receives the header and acts upon it. For example, the presentation layer could define a field indicating the coding technique that the user's message employs. This field is attached to the transmitted data and ignored by the session, transport, link, and physical layers as it contains no information pertinent to their operation. Only when the information reaches the receiver's presentation level would the header be examined and acted upon. A layer, upon receiving its header, removes it before passing the data (and remaining headers) to the next "higher" level.

2.3 Network functions

Gateway functions

2.3.1 The interface with another subnetwork occurs at the network layer within the convergence facility (SNICF). This interface is denoted a gateway. The headers associated with the lower layer functions (subnetwork, link and physical) are not passed from subnetwork to subnetwork by the gateway. Simply stated, each subnetwork transfers data within its own subnetwork independently of any other subnetwork. This means that the physical, link and subnetwork facilities of one network can be organized in a very different manner from the corresponding layers of connected networks and still maintain OSI compatibility.

Subnetwork functions

2.3.2 The management of the movement of the data is performed by the subnetwork access facility. An air-ground link represents such a facility of the network layer. Many such subnetwork facilities connected by gateways form a network.

Relationship between the subnetwork access facility and the subnetwork convergence facility

2.3.3 The transfer of data across three different subnetworks is represented in Figure 2. The subnetwork access, link and physical facilities vary according to the communication system in effect. The subnetwork convergence facility represents a sublayer which is functionally identical for all subnetwork access protocols and thus presents a common interface to the users of the system, i.e. the transport layer.

2.3.4 The transport layer associated with a user on subnetwork I, initiating a transfer of data to a user on subnetwork III, generates an end-user address (Ω). This address is standardized for use by all subnetwork convergence facilities. The data with the end-user address is transferred to the convergence facility of subnetwork I. Here an appropriate subnetwork access

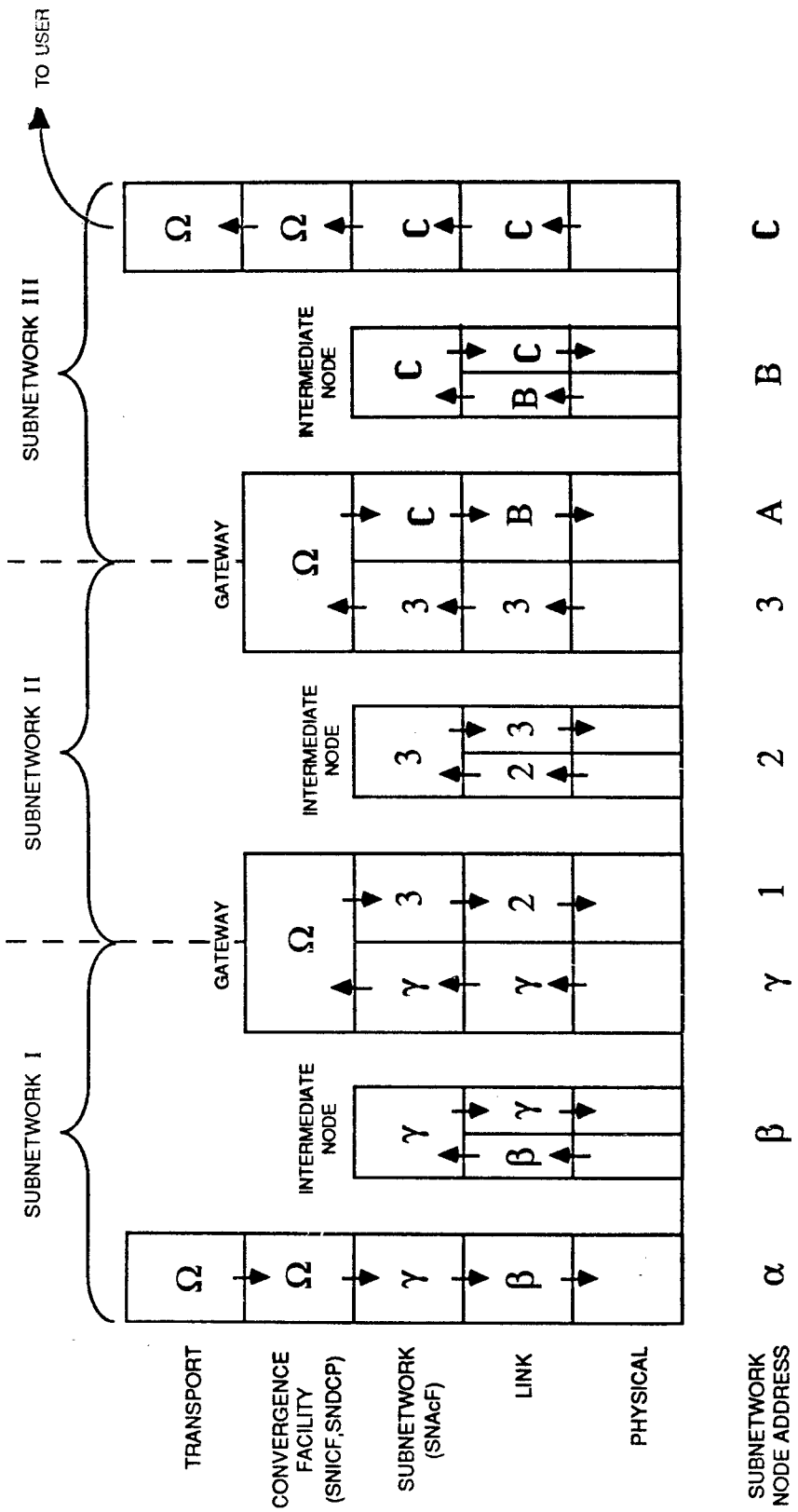

Figure 2. Data transfer through multiple subnetworks

facility (SNAcF) is chosen, if more than one is available. For example, a Mode S data link system may be chosen over a satellite data link system. Once this is done the address of the gateway node to the next subnetwork is determined. This address is local to the subnetwork (in this case γ on subnetwork I) and may have no meaning to the other subnetwork. The subnetwork access facility then receives the data with the local address and transfers it by way of the intermediate node (β) to the node (γ) which is associated with the gateway to the next subnetwork. This represents their first "hop" through a subnetwork by the internetworking facility. At this subnetwork mode the subnetwork access facility examines the address, determines that further routing is unnecessary within the subnetwork, and passes the data (which includes the end-user address) to the gateway (the network convergence facility or internetwork facility). Here the end-user address is examined and a new local subnetwork address is formed for the next subnetwork "hop". The process is repeated until the network convergence facility associated with the end-user is reached and the data is sent to the transport layer for end-to-end data verification.

2.3.5 The basic unit of data transferred through subnetworks is denoted a packet in OSI terminology. Multiple packets may be logically linked to form a user message. This logical construction normally takes place at the transport layer or above. Within this document the term message has been used to refer to a Mode S subnetwork data packet.

GLOSSARY

Subnetwork access facility (SNAcF). The subset of the OSI network layer which provides the interface with the data link layer. The subset's operation is characteristic to a particular subnetwork.

Subnetwork dependent convergence facility (SNDCF). The subset of the OSI network layer which removes discrepancies between the facilities provided by the subnetwork access protocols and the facilities required by the subnetwork independent convergence protocols.

Subnetwork independent convergence facility (SNICF). The subset of the OSI network layer which is the interface to the transport layer and which controls internetworking functions as required. The subset's operation is independent of the characteristics of any subnetwork.

— END —

ICAO TECHNICAL PUBLICATIONS

The following summary gives the status, and also describes in general terms the contents of the various series of technical publications issued by the International Civil Aviation Organization. It does not include specialized publications that do not fall specifically within one of the series, such as the Aeronautical Chart Catalogue *or the* Meteorological Tables for International Air Navigation.

International Standards and Recommended Practices are adopted by the Council in accordance with Articles 54, 37 and 90 of the Convention on International Civil Aviation and are designated, for convenience, as Annexes to the Convention. The uniform application by Contracting States of the specifications contained in the International Standards is recognized as necessary for the safety or regularity of international air navigation while the uniform application of the specifications in the Recommended Practices is regarded as desirable in the interest of safety, regularity or efficiency of international air navigation. Knowledge of any differences between the national regulations or practices of a State and those established by an International Standard is essential to the safety or regularity of international air navigation. In the event of non-compliance with an International Standard, a State has, in fact, an obligation, under Article 38 of the Convention, to notify the Council of any differences. Knowledge of differences from Recommended Practices may also be important for the safety of air navigation and, although the Convention does not impose any obligation with regard thereto, the Council has invited Contracting States to notify such differences in addition to those relating to International Standards.

Procedures for Air Navigation Services (PANS) are approved by the Council for world-wide application. They contain, for the most part, operating procedures regarded as not yet having attained a sufficient degree of maturity for adoption as International Standards and Recommended Practices, as well as material of a more permanent character which is considered too detailed for incorporation in an Annex, or is susceptible to frequent amendment, for which the processes of the Convention would be too cumbersome.

Regional Supplementary Procedures (SUPPS) have a status similar to that of PANS in that they are approved by the Council, but only for application in the respective regions. They are prepared in consolidated form, since certain of the procedures apply to overlapping regions or are common to two or more regions.

The following publications are prepared by authority of the Secretary General in accordance with the principles and policies approved by the Council.

Technical Manuals provide guidance and information in amplification of the International Standards, Recommended Practices and PANS, the implementation of which they are designed to facilitate.

Air Navigation Plans detail requirements for facilities and services for international air navigation in the respective ICAO Air Navigation Regions. They are prepared on the authority of the Secretary General on the basis of recommendations of regional air navigation meetings and of the Council action thereon. The plans are amended periodically to reflect changes in requirements and in the status of implementation of the recommended facilities and services.

ICAO Circulars make available specialized information of interest to Contracting States. This includes studies on technical subjects.

PRICE: U.S.$5.00
(or equivalent in other currencies)

© ICAO 1988
12/88, E/P1/1800

Order No. CIR212
Printed in ICAO